June 15, 2001

RECEIVED

JUN 2 1 2001

DEQ-Coeur d'Alene
Regional Office

MEMORANDUM

TO: Gwen P. Fransen, Regional Administrator
Coeur d'Alene Regional Office

FROM: Bill Rogers, Air Quality Engineer
State Technical Services Office

SUBJECT: ***PERMIT TO CONSTRUCT TECHNICAL ANALYSIS***
P-000106, Riley Creek Lumber Company, Laclede
(Final Permit to Construct No. 017-00027)

PURPOSE

The purpose of this memorandum is to satisfy the requirements of IDAPA 58.01.01.200 *(Rules for the Control of Air Pollution in Idaho)* for issuing Permits to Construct (PTC).

PROJECT DESCRIPTION

The Idaho Department of Environmental Quality (DEQ) received a PTC application from Riley Creek Lumber Company (Riley Creek) to amend the facility's existing two PTCs (PTC Nos. 0240-0027 and 017-00027) to prevent outdated and no longer applicable requirements from being incorporated into their forthcoming Title V Operating Permit (OP). Each amendment is listed in Section 3 of this document with DEQ's determination immediately following. Riley Creek also proposes to modify PTC No. 0240-0027 by increasing the allowable carbon monoxide (CO) emissions from boiler #1. The details of the modification are presented in subsection 3.1.12. Lastly, the facility's two existing permits are being combined into one document, PTC No. 017-00027.

During the public comment period held from April 24, 2001, to May 24, 2001, Riley Creek submitted a PTC application to construct a baghouse on the planer shavings cyclone. The application was received on May 15, 2001. The proposed project is mandated by a Consent Order in which Riley Creek is required to reduce PM emissions. After construction, PM emissions from the planer shavings cyclone are estimated to decrease by 11.42 tons per year. The decrease is made enforceable by requiring operating, monitoring, and recordkeeping requirements for the baghouse in the final PTC. Because there is not an increase in emissions associated with the proposed project, the PTC does not again have to be made available for public comment.

SUMMARY OF EVENTS

On April 24, 2000, DEQ received an application from Riley Creek. The application was assigned to the State Technical Services Office for processing on May 22, 2000, and was subsequently determined complete on June 2, 2000. On June 13, 2000, Riley Creek requested in writing that DEQ provide a proposed permit for their review as allowed by IDAPA 58.01.01.209.01.b.i. A proposed permit was made available to Riley Creek on July 27, 2000. On September 11, 2000, Riley Creek provided written comments on the proposed permit. One submitted comment raised concerns that Prevention of Significant Deterioration (PSD) had possibly been triggered for boiler #1 for CO emissions. On November 8, 2000, Riley Creek notified DEQ of their intent to conduct a source test to measure CO emissions from boiler #1. The source test was conducted on December 12, 2000, and showed that boiler #1 was operating well below PSD triggering levels. On January 26, 2001, representatives from Riley Creek and DEQ met to discuss the CO emissions from boiler #1. On February 13, 2001, Riley Creek again requested in writing that DEQ provide a proposed permit for their review. A proposed permit and technical analysis were made available for review on March 13, 2001. On April 3, 2001, Riley Creek informed DEQ in writing to proceed processing the permit application. On April 24, 2001, the proposed permit and technical analysis was made available for public comment as required by IDAPA 58.01.01.209.01.c. On May 15, 2001, DEQ received a PTC application from Riley Creek to construct a baghouse on the planer shavings cyclone as required by a Consent Order. Operating, monitoring, and recordkeeping requirements for the baghouse are incorporated into the final PTC.

DISCUSSION

1. Area Classification

Riley Creek Lumber Company is located in Laclede, Idaho which is located in central Bonner County. This area is designated as an attainment or unclassifiable area for all regulated criteria air pollutants. Bonner County is located in Air Quality Control Region 63 and Zone 11.

2. Facility Classification

Riley Creek Lumber Company is a major facility as defined by IDAPA 58.01.01.006.55 and by 40 CFR 52.21. This facility is an existing PSD major facility that emits or has the potential to emit a regulated air pollutant or pollutants in excess of 250 tons-per-year (T/yr). The facility is not a designated facility as defined by IDAPA 58.01.01.006.27, or a listed facility as defined by 40 CFR 52.21(b)(i)(*a*). The facility is not subject to federal New Source Performance Standards (NSPS) in accordance with 40 CFR Part 60, National Emission Standards for Hazardous Air Pollutants (NESHAP) in accordance with 40 CFR Part 61, or National Emission Standards for Hazardous Air Pollutants for Source Categories (Maximum Achievable Control Technology (MACT) Standards) in accordance with 40 CFR Part 63. The Standard Industrial Classification code defining the facility is 2421, and the AIRS/AFS facility classification is A.

3. Requested Amendments and Boiler #1 Modification

The following subsections list the requested permit amendments. DEQ's regulatory determinations immediately follow. The boiler modification is discussed in subsection 3.1.12. Photocopies of the April 24, 2000, permit application, the May 15, 2001, permit application, and existing permits are provided as Appendix A of this document for clarification and for reference.

3.1 **PTC No. 0240-0027 (Issued January 13, 1989)**

3.1.1 *Page 1 of 17, Item 5. Contact person is Steve Spletstoser and his title is Operations Manager.*

The title page of the proposed permit lists Steve Spletstoser as the facility contact person, with the title of Operations Manager.

3.1.2 *Page 2 of 17, Condition 1.1. Replace the word "incinerate" with "combustion." The boiler uses bark and wood for fuel and is not used to incinerate.*

Condition 1.1 is a process description. Process descriptions are no longer placed in permits (PTCs or OPs). The correct process description is as noted in the April 24, 2000, permit application.

Change Condition 2.2 [should be 1.2] *to include the* [electrostatic precipitator] *ESP as follows:*

Condition 1.2 is an emissions control device description. As with process descriptions, emissions control device descriptions are no longer placed in permits. The correct emissions control device description is as noted in the April 24, 2000, permit application.

3.1.3 *Page 3 of 17 appears to be a copy of Page 2 of 17 and should be removed.*

Page 3 of 17 is an identical copy of Page 2 of 17 and should not have been included in the 1989 PTC.

3.1.4 *Page 4 of 17, Conditions 3.1 and 4.1. The required source test has been completed. We request that these obsolete conditions be removed or updated to make the permit current.*

The initial source test requirement has been fulfilled. The source test and source test reporting requirements are included in the final permit to retain the integrity of the original permit. Additional source testing is not required upon issuance of the final permit.

3.1.5 *Pages 5 - 8 of 17. The Olivine burner and associated wood-waste handling equipment is inoperable and will eventually be dismantled. Remove all of the Olivine-related conditions.*

Until the Olivine burner is completely dismantled and removed offsite, it has a potential to emit and is therefore subject to regulation. The final permit retains the condition that disallows the use of the Olivine burner and all associated wood-waste handling equipment.

3.1.6 *Page 9 of 17. Riley Creek has eliminated many of the emission points at the planer mill. Change the Source Description as follows* (see Appendix A).

The corrected process and controls descriptions are as provided in the April 24, 2000, permit application.

Note, the only remaining point source in the planer mill is the planer mill cyclone. The planer mill cyclone is also called the planer shavings cyclone. This document refers to the planer shavings cyclone to be consistent and not confusing. The planer shavings cyclone has replaced cyclones #1, #2, #3, and #5. Process emissions that formerly exhausted to these cyclones now exhausts to the planer shavings cyclone.

3.1.6.1 Planer Shavings Cyclone Baghouse. **Note this subsection replaces subsection 3.1.7 of the draft and proposed technical memorandums.**

Riley Creek is required by Consent Order to construct a baghouse on the planer shavings cyclone to reduce PM emissions. Based on the permit application submitted for the baghouse, the applicant estimates PM emissions will decrease by 11.42 T/yr. The final permit requires the following in order to make the emissions decrease enforceable:

- Riley Creek is required to maintain and operate the baghouse according to the manufacturer's specifications;
- Riley Creek is required to develop and Operations and Maintenance (O&M) manual that describes the procedures that will be followed to maintain the baghouse in good working order and operate it as efficiently as practicable in order to comply with the provisions of the final permit;

- Riley Creek is required to install, calibrate, maintain, and operate, according to the manufacturers specifications, a monitoring device to continuously measure the pressure differential across the baghouse;

- Riley Creek is required to monitor and record the pressure differential across the baghouse daily when in operation; and

- Particulate matter emissions from the baghouse cannot exceed 0.1 grains per dry standard foot of exhaust gas (gr/dscf) (IDAPA 58.01.01.710.08.b), 2.14 pounds per hour (lb/hr), or 9.39 T/yr.

The small cyclone (cyclone #4) mentioned in the process description is identified in Riley Creek's Tier I OP application as the planer chipper room dust cyclone. This cyclone was added to augment the airflow for the planer shavings cyclone. Emissions from the planer chipper room dust cyclone are currently vented back into the planer mill building. According to Steve Spletstoser, Operations Manager, Riley Creek Lumber Company, the planer chipper room dust cyclone will never be modified such that emissions are exhausted to the atmosphere. Consequently, this cyclone does not have a potential to emit and is not subject to regulation.

3.1.7 *Page 11 of 17 contains conditions for the chip handling system. Riley Creek has removed all of the chip cyclones.* [Cyclone #4 was used in the chip handling system]. *Chips are either transferred pneumatically to a target box at the rail car load out or conveyed via enclosed chain conveyor to the truck bin. Because target boxes are generally treated as fugitive sources, we suggest that all of the chip handling conditions be removed. The chip handling emission should be included in the "plant property and fugitive emissions sources" as listed on Page 13 of 17.*

Target boxes are typically designed with a stack or similar outlet to allow displaced air to be vented as material is pneumatically conveyed into the target box. IDAPA 58.01.01.006.43 defines fugitive emissions as "those emissions that could not reasonably pass through a stack, chimney, vent, or other functionally equivalent opening." Based on this definition, target boxes are not fugitive emissions sources, but rather are point sources subject to IDAPA 58.01.01.625 (visible emissions) and IDAPA 58.01.01.710.08.a (grain loading).

3.1.8 *Page 11 of 17. Change the source description as follows:*

<u>The rail car target box</u> ~~chip cyclone (cyclone #4)~~ and associated chip pneumatic conveyance system.

The description above is the correct description for the rail car target box.

Conditions 1.1 and 1.2 on Page 11 of 17 are process and emissions controls descriptions. They are as noted in the April 24, 2000, permit application.

3.1.9 *Eliminate Condition 2.1. Cyclone #4 has been removed. Change Condition 2.2 as follows:*

2.2 Visible emissions from ~~cyclone vent #4~~ <u>the target box</u> shall not exceed twenty (20%) percent opacity ...

FINAL

As discussed in Subsection 3.1.8 of this document, the rail car target box is subject to IDAPA 58.01.01.625.

3.1.10 *Page 13 of 17. Revise Condition 1.1 as follows* (see Appendix A).

Condition 1.1 is a process description. The correct process description is as noted in the April 24, 2000 permit application.

Riley Creek waters logs as needed in the log yard to maintain the wood quality but the debarker area is not equipped with water sprays. We request that the spray language be removed. Riley Creek applies water to the roads but not oil. Revise Condition 1.2 as follows (See Appendix A).

Condition 1.2 is a control description. Even though the debarker area is not equipped with water sprays to control fugitive dust emissions, that does not relieve Riley Creek from the requirement to control fugitive dust emissions from this emissions source. If the debarker area tends to be, or is, a source of fugitive dust emissions, those emissions must be controlled as required by IDAPA 58.01.01.651. The control description, as written in the April 24, 2000, permit application, does not meet the requirements of IDAPA 58.01.01.650 – 651.

3.1.11 *Page 14 of 17. Eliminate Condition 2.1. The fugitive emissions estimates should not become permit limits. There is no regulatory basis for these limits.*

Fugitive emissions are not accounted for in the determination of this facility's potential to emit because this facility is not a designated facility and it is not regulated by either Section 111 or Section 112 of the Clean Air Act. Therefore, there is no regulatory basis to include limits for fugitive dust emissions in any permit.

Modify Condition 3.1.1 as shown below: (See Appendix A). . .. *Riley Creek does not use oil or chemicals other than dust suppressants on the roads.*

Fugitive dust emissions sources are not specifically regulated. IDAPA 58.01.01.651 lists some precautions that may be used to reasonably control fugitive dust emissions.

3.1.12 *Page 16 of 17. Appendix A*

Emissions estimates for boiler gaseous emissions should not be limits because there is no regularly basis for these limits. Only the boiler particulate limit has a regulatory basis. Remove emission limits for CO, NO_x [oxides of nitrogen], *SO_2* [sulfur dioxide], *and VOC* [volatile organic compounds]. *Boiler particulate emissions are limited to 22.1 lb/hr and 96.4 T/yr.*

Carbon monoxide is included in the final permit because it is the most limiting pollutant and the only pollutant emitted at major source levels. None of the other criteria air pollutants are emitted at major source threshold levels as is shown in Table 1 below. The only reason to include a mass emission rate in a permit is to protect a short-term or long-term ambient standard, or to provide a limit for a specific regulation (e.g. grain loading, NSPS, NESHAP, etc.). In order to determine if NO_x, SO_2, or VOCs have to be limited to protect their respective ambient standards, the pound-per-hour emission rate of each pollutant was modeled. The results of the modeling analysis indicate that none of these pollutants cause or contribute to a

violation of their respective ambient standards. Consequently, none of these pollutants have to be specifically limited in the final permit. The boiler stack parameters used in the modeling analysis were obtained from Riley Creek's Tier I OP application dated April 27, 2000. They are listed below for reference.

Stack Height (ft)	48
Stack Diameter (ft)	4.0
Stack Gas Flowrate (acfm)	46000
Stack Gas Temperature (°F)	500
Mass Emission Rate (lb/hr)	1.0

Boiler #1 Modification – Increase the allowable CO emission rate by 38.8 T/yr. **(Note, this analysis is outside of the amendments requested in the April 24, 2000 permit application).**

Table 1 lists the potential to emit for boiler #1 before the modification.

Table 1. Pre-Modification Boiler #1 Emissions and Ambient Impacts

POLLUTANT	EMISSION RATE		PREDICTED AMBIENT IMPACT ug/m3					NATIONAL AMBIENT AIR QUALITY STANDARDS Ug/m3				
	lb/hr	T/yr	1-hr	3-hr	8-hr	24-hr	annual	1-hr	3-hr	8-hr	24-hr	annual
PM/PM-10	22.1	96.2	—	—	—	95.23	34.5	—	—	—	150	50
CO	38.3	167.2	11490	—	543	—	—	40000	—	10000	—	—
NOx	2.5	10.2	—	—	—	—	40.21	—	—	—	—	100
SOx	0.6	2.5	—	543.6	—	144.3	23.55	—	1300	—	365	80
VOC	5.4	23.4	83.64	—	—	—	—	235	—	—	—	—

Comments submitted by Riley Creek in response to the draft PTC provided to them in July 2000 indicate that boiler #1 might have triggered PSD for CO emissions. This comment was based on the discovery of a miscalculation of the boiler's heat input rate that was subsequently used to establish the allowable CO emission limits. Riley Creek contends that CO emissions should have been established at 103 lb/hr and 451 T/yr when the permit was issued in 1989. If this error is valid, the boiler should have gone through PSD permitting in 1989. The error was not caught and the boiler's CO emissions were limited to 38.3 lb/hr and 167.2 T/yr.

Upon discovery of the error, Riley Creek proposed to modify the 1989 permit and increase CO emissions up to 451 T/yr. The proposed increase is a significant net emissions increase subjecting the proposed modification to PSD review (451-167.2 = 283.8 T/yr). The emission rates are based on the boiler's maximum heat rate and AP-42 emission factors.

Instead of going though PSD review based on AP-42 emission factors, Riley Creek proposed to conduct a source test to measure CO emissions. If the source test proved the boilers CO emissions subject it to PSD, then Riley Creek was prepared to initiate the PSD process as well as deal with compliance issues. The source test results indicate that boiler #1 averaged 13.5 lb/hr of CO emissions during the testing

period. The measured emissions are within the allowable emission rate limit of 38.3 lb/hr. Riley Creek does not want to reduce their allowable CO emission limit to the emission rate measured during the source test because they are not completely confident that the boiler will operate at the lower emission rate at all times.

Riley Creek now proposes to increase CO by 8 lb/hr, which is equivalent to approximately 38.8 T/yr assuming continuous operation. In their judgement, the modification will allow for additional operational flexibility. From a permitting standpoint, the proposed modification is not a significant net emissions increase; therefore, PSD does not apply. The modification can simply undergo analysis under the minor New Source Review program.

Table 2 lists the potential to emit for boiler #1 after the modification. Table 2 also provides an emissions inventory for boiler #1. Again, only PM and CO are specifically limited in the final permit. The predicted ambient impacts section of the table include the statewide ambient background concentrations available at the time of this permitting action. The predicted ambient impacts for each criteria air pollutant and the SCREEN3 output file are presented in Appendix B of this document.

Table 2. Post-Modification Boiler #1 Emissions and Ambient Impacts

POLLUTANT	EMISSION RATE		PREDICTED AMBIENT IMPACT ug/m3					NATIONAL AMBIENT AIR QUALITY STANDARDS ug/m3				
	lb/hr	T/yr	1-hr	3-hr	8-hr	24-hr	Annual	1-hr	3-hr	8-hr	24-hr	Annual
PM/PM-10	22.1	96.2	—	—	—	95.23	34.5	—	—	—	150	50
CO	46.3	206	11498	—	549	—	—	40000	—	10000	—	—
NOx	2.5	10.2	—	—	—	—	40.21	—	—	—	—	100
SOx	0.6	2.5	—	543.6	—	144.3	23.55	—	1300	—	365	80
VOC	5.4	23.4	83.64	—	—	—	—	235	—	—	—	—

In addition to modifying the boilers CO emissions, Riley Creek decided it is in its best interest to monitor and record the steaming rate of boiler #1 as part of the final permit. This requirement forces Riley Creek to observe how the boiler is operating with regard to steam production which directly affects air pollutant emissions. The final permit limits the steaming rate for boiler #1 to 40,200 lb/hr, which is based on the December 2000 source test. For enforceability purposes, the final permit requires the installation of a steam production monitoring device and a requirement to monitor and record the steam production on an hourly basis.

Remove limits for Olivine burner.

Emission rate limits for the Olivine burner are not included in the final permit. The final permit does, however, prohibit the use of the Olivine burner and its associated wood-waste handling system.

Remove all of the listed cyclones and replace with the Planer Shavings Cyclone and the Planer Chipper Room Dust Cyclone. The Planer Chipper Room Dust Cyclone

exhaust is currently filtered and vented indoors, but Riley Creek has vented the cyclone outdoors in the past and would like the flexibility to change the system if it becomes necessary.

Steve Spletstoser, Operations Manager, Riley Creek Lumber Company, has indicated in writing that Riley Creek will never modify the Planer Chipper Room Dust Cyclone in such a manner that it will ever be a point source.

The Planer Shavings Cyclone emissions should be based on 8,760 hours-per-year, not on 4,200 hours-per-year as previously calculated. There is no standard limiting the hours of operation. Planer cyclone particulate emissions are calculated as follows based on Idaho DEQ emission factors: (See Appendix A of this document for calculations.)

See subsection 3.1.6 of this document for the explanation.

Emissions from the Planer Chipper Room Dust Cyclone are calculated with the same emission factors and hours of operation as shown above. The exhaust flowrate for this cyclone is 3,500 cubic feet per minute (cfm). The estimated emissions are: (See Appendix A.)

The planer chipper room dust cyclone does not have a potential to emit.

3.1.13 *Remove Page 17 of 17. Fugitive emissions estimates are not permit limits.*

Fugitive emissions are not limited to a mass emission rate in the final permit.

3.2 **PTC No. 017-00027 (December 31, 1996)**

3.2.1 *Page 2 of 6. Condition 2.2 limiting fuel loading rate is not a workable requirement for the following reasons:*

- *Riley Creek is able to count loaders of fuel at this time because they have not yet built an automated fuel feed system. Once an automated fuel feed system is installed, it will no longer be possible to track the weight of fuel.*
- *Because the fuel is stored outdoors, it picks up weight due to rain, snow and ice. In the winter when steam demand is highest, Riley Creek could be forced to curtail production because the fuel is heavy with snow.*
- *The current loading rate of 112 tons of hog fuel per day is not enough fuel to fire the boiler to it's full capacity. The loading rate was apparently miscalculated.*

Riley Creek is requesting that the fuel-loading rate be replaced with a boiler steaming rate limit. We chart boiler-steaming rate on a continuous recorder and keep the records on file. We request that this Condition 2.2 be revised as follows:

2.2 Boiler ~~Loading~~ Steaming Rate

The maximum ~~loading~~ steaming rate of the Kipper & Sons wood-fired boiler shall not exceed ~~one hundred twelve tons per day (112 T/day) of wood waste~~ 39,200 pounds of steam per hour (pph).

Limiting the steaming rate is the more appropriate method for wood-fired boilers and has been used to limit other facilities' wood-fired boilers. Therefore, the final permit limits the steaming rate as indicated above.

3.2.2 *Page 3 of 6. Eliminate Condition 2.5 because the Olivine Burner is no longer in service.*

Until the Olivine burner and its associated wood-handling system is completely dismantled and removed offsite, it has a potential to emit and is subject to permitting requirements. The final permit retains the requirement that disallows the operation of the Olivine burner and its associated wood-waste handling system.

Riley Creek feeds Boiler #2 through a hopper and a series of conveyors. Emissions from this system are generated primarily at the drop points and not along the moving conveyors. The conveyor drop points are surrounded on all sides to prevent wind from blowing the material. The conveyors and the hopper are enclosed on the sides but not on top. There is no practical way to place a cover o the fuel hopper at the fuel pile. We request that Condition 2.6 be revised as follows:

2.6 *Wood-waste Handling System*

Conveyors and drop points in ~~The wood-waste~~ fuel handling system, ~~including all conveyors and storage bins~~, shall be enclosed on the sides to minimize fugitive emissions.

DEQ will incorporate this condition as indicated into the final permit. In addition, fugitive emissions are required to be controlled in accordance with IDAPA 58.01.01.650 and 651.

We request that Condition 3.1 be revised to require monitoring of steam instead of wood weight as discussed above.

3.1. *Operating Parameters Monitoring*

The Permittee shall monitor and record ~~the quantity of wood waste throughput to the wood fired boilers in tons per day (T/day)~~ the steam production rate of the wood-fired boiler pounds of steam per hour. The most recent two (2) years compilation of records shall be kept on-site and be made available to DEQ representatives upon request.

DEQ will require monitoring and recordkeeping of the steam production rate.

Condition 3.2 has been fulfilled and should be removed or updated.

The initial source testing requirement has been fulfilled. The source test requirement and source test-reporting requirement are included in the final permit to retain the integrity of the original permit. Source testing is not required upon issuance of the final permit.

3.2.3 *Page 6 of 6, Appendix A.*

Input and output information for Boiler #2 are incorrect. The original permit application forms for the boiler listed the boiler size as 35,000 pph when it should be

40,000 pph. More significantly, the permit application forms listed the Rated Heat Input Capacity as 35 MMBtu/hr. This conversion from steaming rate to heat input rate assumed boiler efficiency of 100% which is not reasonable for a hog fuel boiler. Fuel consumption rates were calculated based on the stated heat input capacity and are not correct for this boiler.

The correct calculations for Boiler #2 are shown below.

- *Boiler capacity is 40,000 pounds of steam per hour,*
- *Estimated steam enthalpy is 1,100 ~~pounds per hour~~ Btu/lb* (British thermal units per pound),
- *Estimated boiler efficiency is 65%.*

The enthalpy of saturated steam at 500°F is 1202.5 Btu/lb.[1] The estimated enthalpy used in applicant's calculations is acceptable. The estimated boiler efficiency is conservative and therefore acceptable. Generally, combustion efficiencies for wood combustion vary between 68 to 79 percent. . ..[2]

The submitted calculations were checked for accuracy and are acceptable. The corrected allowable PM emission rate limits for boiler #2 were changed to 12.1 lb/hr and 53.0 T/yr. The steaming rate is limited to 39,200 lb/hr based on a previous source test. Emission are based on the higher steaming rate and are therefore conservative.

4. Modeling

The U.S. Environmental Protection Agency (EPA) approved SCREEN3 model was used to predict the ambient impacts. The results indicate that no applicable ambient air quality standard will be exceeded. The SCREEN3 outputs and ambient impact calculations are presented in Appendix B of this document.

5. Regulatory Review

5.1 IDAPA 58.01.01.201 PTC Required

A PTC is required for this project because it does not meet the exemption requirements specified in IDAPA 58.01.01.220 through .223.

5.2 IDAPA 58.01.01.210 Demonstration of Preconstruction Compliance with Toxic Standards

Compliance with toxic standards has been demonstrated.

5.3 IDAPA 58.01.01.577 Ambient Air Quality Standards for Specific Air Pollutants

Compliance with the National Ambient Air Quality Standards has been demonstrated.

---

[1] Yanus A. Cengel and Michael A. Boles, Thermodynamics: An Engineering Approach, (USA: McGraw-Hill, 1989), p. 824: Table A-4E.

[2] APTI Course 427, Combustion Evaluation in Air Pollution Control, Student Manual (Revised Draft), (USEPA, Air Pollution Training Branch, Office of Air Quality Planning and Standards, Research Triangle Park, NC, March 1994), p. 221.

5.4 Prevention of Significant Deterioration

Not applicable.

5.5 New Source Performance Standards (NSPS) 40 CFR 60

The facility boilers were constructed prior to the proposed date of the applicable NSPS (40 CFR 60.40c); therefore, they are not subject to the performance standards. NSPS regulations do not apply to any other sources at the facility.

5.6 National Emission Standards for Hazardous Air Pollutants 40 CFR 61

Not applicable.

5.7 Maximum Achievable Control Technology Standards 40 CFR 63

Not applicable.

6. Permit Requirements

6.1 Boiler #1 - Emission Limits

6.1.1 Carbon Monoxide

Carbon monoxide is the most limiting pollutant and is the only pollutant emitted at major source threshold levels. Therefore, CO is specifically limited in the final permit.

6.2 Boiler #1 - Operating Requirements

6.2.1 Boiler Steaming Rate

This limits the steam production of boiler #1 to assure proper boiler operation that directly effects emissions to the atmosphere.

6.2.2 Steam Production Monitoring Equipment

This requires the installation, calibration, and maintenance of a device to measure the steam production rate of boiler #1.

6.2.3 ESP Voltage and Amperage

This requires the voltage and amperage to be maintained within the manufacturer's and O&M manual's operating specifications to assure optimal capture efficiency.

6.3 Boiler #1 – Monitoring Requirements

6.3.1 Boiler #1 Steam Production Rate

This requires the permittee to monitor and record the steam production rate to boiler #1 in order to demonstrate compliance with the steam production limit.

6.4 Boiler #2 - Emission Limits

6.4.1 Carbon Monoxide

Carbon monoxide is the most limiting pollutant and is the only pollutant emitted at major source threshold levels. Therefore, CO is specifically limited in the final permit.

6.5 Boiler #2 - Operating Requirements

6.5.1 Boiler Steaming Rate

This limits the steam production of boiler #2 to assure proper boiler operation that directly effects emissions to the atmosphere.

6.5.2 Steam Production Monitoring Equipment

This requires the installation, calibration, and maintenance of a device to measure the steam production rate of boiler #2.

6.5.3 ESP Voltage and Amperage

This requires the voltage and amperage to be maintained within the manufacturer's and O&M manual's operating specifications to assure optimal capture efficiency.

6.6 Monitoring Requirements

6.6.1 Boiler #2 Steam Production Rate

This requires the permittee to monitor and record the steam production rate to boiler #2 in order to demonstrate compliance with the steam production limit.

6.6.2 Steam Production Monitoring Equipment

This requires the installation, calibration, and maintenance of a device to measure the steam production rate of boiler #2.

6.7 Planer Shavings Cyclone Baghouse

6.7.1 Emission Limits

IDAPA 58.01.01.710.08.b is an applicable requirement because the baghouse is process equipment constructed after July 1, 2000. The emission rate limits of 2.14 lb/hr and 9.39 T/yr are based on the baghouse manufacturer's guaranteed grain loading of 0.005 gr/dscf (see Appendix A for emissions calculations).

6.7.2 Pressure Differential Monitoring Equipment

This requires the installation, calibration, maintenance, and operation of a monitoring device to continuously measure the pressure differential across the baghouse.

6.7.3 O&M Manual

This requires the development of an O&M manual which describes the procedures that will be used to maintain the baghouse in good working order and operate optimally.

6.7.4 Pressure Differential Monitoring

This requires the pressure differential across the baghouse to be monitored and recorded daily to comply with the baghouse operating requirements of the final permit.

7. Permit Coordination

7.1 State Air Program

This technical analysis documents the amendments and modification to Riley Creek's facility prior to drafting the facility's Tier I OP.

8. AIRS

A copy of the facility's AIRS/AFS compliance report is presented as Appendix C of this document. This permitting action involves administrative amendments and a modification that increases CO emissions from the facility's boiler #1. The AIRS/AFS compliance report has been changed to reflect the 38.8 T/yr increase in CO for boiler #1. The planer shavings cyclone baghouse emission limits are reflected in the AIRS/AFS compliance report under that emission point. The emission point information is not changed. Below is the AIRS/AFS Facility-Wide Classification Data Entry Form.

AIRS/AFS FACILITY-WIDE CLASSIFICATION DATA ENTRY FORM

FACILITY NAME: Riley Creek Lumber Company
AIRS NUMBER: 017-00027 **DATE: 06/15/01**

Air Program Description	SIP	PSD	NESHAP	NSPS	MACT	TITLE V	AREA CLASSIFICATION Attainment Unclassifiable Nonattainment
SO_2	B	B				B	Attainment, Unclassifiable
NOx	B	B				B	Attainment, Unclassifiable
CO	A	A				A	Attainment, Unclassifiable
PM-10	A	B				A	Attainment, Unclassifiable
PT (Particulate)	A	B				A	Attainment, Unclassifiable
VOC	B	B				B	Attainment, Unclassifiable
VE/FE/FD	ND	ND	ND	ND	ND	ND	

*VE/FE/FD (VISIBLE EMISSIONS, FUGITIVE EMISSIONS, AND FUGITIVE DUST) ARE ENTERED FOR COMPLIANCE PURPOSES ONLY AND DO NOT REQUIRE EVALUATION BY THE PERMIT ENGINEER.

FINAL

9. Fees

This facility is a major facility as defined by IDAPA 58.01.01.008.10 and is therefore subject to registration and registration fees in accordance with IDAPA 58.01.01.525. According to the Air Emissions Database Master list for 2001, dated June 4, 2001, this facility has registered between 200 and 500 tons by paying fees in accordance with IDAPA 58.01.01.527.06.(6). In accordance with IDAPA 58.01.01.532, Riley Creek has elected to pay 50 percent (50%) of its annual registration fees at a time. The first 50 percent of the annual registration fees were paid on May 1, 2001, the balance is due on or before August 1, 2001. The modification to boiler #1 increases the amount to be registered by 38.8 T/yr.

RECOMMENDATION

Based on review of application materials and all applicable state and federal rules and regulations, DEQ staff recommend that Riley Creek Lumber Company be issued final PTC No. 017-00027. A proposed permit was made available for public comment as required by IDAPA 58.01.01.209.

BR/bm P169 1005 G:\AHW\ROGERS\PTC\RILEY\000106.TM

cc: DEQ State Offices
Coeur d'Alene Regional Office

FINAL

APPENDIX A

PTC No. 0240-0027
PTC No. 017-00027
April 24, 2000 PTC Application
May 15, 2001 PTC Application

Riley Creek Lumber Company
Laclede, Idaho

P000106

June 2001

STATE OF IDAHO AIR POLLUTION OPERATING PERMIT GENERAL INFORMATION	PERMIT NUMBER 0240 - 0027 AQCR: 063 CLASS: A1 SIC: 2421 ZONE: 11 UTM COORDINATE (km): 518.2, 5335.0

1. PERMITTEE		
Riley Creek Lumber Company		
2. PROJECT		
Saw and Planer Mill		
3. ADDRESS	TELEPHONE #	COUNTY
P. O. Box 220	(208)263-7574	Bonner
4. CITY	STATE	ZIP CODE
Laclede	Idaho	83841
5. PERSON TO CONTACT	TITLE	
Bob Nix	General Manager	

6. EXACT PLANT LOCATION

South Highway 2, Riley Creek Road, Laclede, Idaho

7. GENERAL NATURE OF BUSINESS AND KINDS OF PRODUCTS

Lumber, wood chips, hog fuel, and wood shavings

8. GENERAL CONDITIONS

This permit is issued according to the Rules and Regulations for the Control of Air Pollution in Idaho, Section 01.1012, and contains only to emissions of air contaminants which are regulated by the State of Idaho.

ADMINISTRATOR
DIVISION OF ENVIRONMENT

ISSUED January 13, 1989
Date

EXPIRES January 13, 1994
Date

HWE 0052

AIR POLLUTION OPERATING PERMIT

PERMITTEE, PROJECT, AND LOCATION

PERMIT NUMBER

0 2 4 0 - 0 0 2 7 - [ ] [ ] [ ]

Riley Creek Lumber Company
Saw and Planer Mill
LaClede, Idaho

The permittee is hereby allowed to operate the equipment described herein subject to the emission limits and monitoring and reporting requirements specified herein.

SOURCE

Woodwaste boiler and associated handling of woodwaste

ABCO Boiler

1. SOURCE DESCRIPTION

1.1 Process Description. This process involves the incineration of wood waste in the Perry Smith Abco boiler. This boiler is fired by sawdust, hog fuel, and wood shavings and has a maximum rated capacity of 41,500 pounds of steam produced per hour. Woodwaste from the boiler fuel bin is transferred into the boiler by a triple box chain conveyance system.

1.2 Controls. Emissions from the boiler are controlled by a multiclone and vented through the boiler stack. Emissions from the boiler fuel bin are reduced because it is enclosed on three (3) sides.

2. EMISSION LIMITS

2.1 Particulate emissions from the boiler stack shall not exceed 0.200 grains per standard dry cubic foot of effluent gas adjusted to eight (8%) percent oxygen by volume (IDAPA 16.01.1301,02), nor shall they exceed the pound per hour (lb/hr) and ton per year (T/y) values listed in Appendix A.

2.2 Visible emissions from the boiler stack shall not exceed twenty (20%) percent opacity for a period or periods aggregating more than three (3) minutes in any sixty (60) minute period, as require by the Department's "Evaluation of Visible Emissions Manual" (IDAPA 16.01.1201).

ADMINISTRATOR
DIVISION OF ENVIRONMENT

ISSUED January 13, 1989
Date

EXPIRES January 13, 1994
Date

HWE 0052

AIR POLLUTION OPERATING PERMIT

PERMITTEE, PROJECT, AND LOCATION

PERMIT NUMBER

0 2 4 0 - 0 0 2 7 - [ ] [ ] [ ]

Riley Creek Lumber Company
Saw and Planer Mill
LaClede, Idaho

The permittee is hereby allowed to operate the equipment described herein subject to the emission limits and monitoring and reporting requirements specified herein.

SOURCE

Woodwaste boiler and associated handling of woodwaste

1. SOURCE DESCRIPTION

1.1 Process Description. This process involves the incineration of wood waste in the Perry Smith Abco boiler. This boiler is fired by sawdust, hog fuel, and wood shavings and has a maximum rated capacity of 41,500 pounds of steam produced per hour. Woodwaste from the boiler fuel bin is transferred into the boiler by a triple box chain conveyance system.

1.2 Controls. Emissions from the boiler are controlled by a multiclone and vented through the boiler stack. Emissions from the boiler fuel bin are reduced because it is enclosed on three (3) sides.

2. EMISSION LIMITS

2.1 Particulate emissions from the boiler stack shall not exceed 0.200 grains per standard dry cubic foot of effluent gas adjusted to eight (8%) percent oxygen by volume (IDAPA 16.01.1301,02), nor shall they exceed the pound per hour (lb/hr) and ton per year (T/y) values listed in Appendix A.

2.2 Visible emissions from the boiler stack shall not exceed twenty (20%) percent opacity for a period or periods aggregating more than three (3) minutes in any sixty (60) minute period, as require by the Department's "Evaluation of Visible Emissions Manual" (IDAPA 16.01.1201).

ADMINISTRATOR
DIVISION OF ENVIRONMENT

ISSUED January 13, 1989
Date

EXPIRES January 13, 1994
Date

HWE 0052

AIR POLLUTION OPERATING PERMIT

PERMITTEE, PROJECT, AND LOCATION

PERMIT NUMBER

0240 - 0027 - ___

Riley Creek Lumber Company
Saw and Planer Mill
LaClede, Idaho

The permittee is hereby allowed to operate the equipment described herein subject to the emission limits and monitoring and reporting requirements specified herein.

SOURCE

Woodwaste boiler and associated handling of woodwaste

3. MONITORING REQUIREMENTS

3.1 The permittee shall conduct a source test, within one (1) year after the issuance date of this permit, to measure the particulate emissions from the boiler stack. Emission testing methods shall be in accordance with U.S. EPA Reference Methods 1,2,3 and 5. Visible emissions shall be observed during the emission test. The operating process weight rate (input) shall be measured and recorded during the emission test. The method for determining the process weight rate shall be reported with the emission test data.

4. REPORTING REQUIREMENTS

4.1 All emission test data including the process weight rate and visible emission observation data shall be reported to the Idaho Air Quality Bureau within thirty (30) days of the emission test.

ADMINISTRATOR
DIVISION OF ENVIRONMENT

ISSUED January 13, 1989
Date

EXPIRES January 13, 1994
Date

HWE 0U3Z

AIR POLLUTION OPERATING PERMIT

PERMITTEE, PROJECT, AND LOCATION

PERMIT NUMBER

0240 - 0027 - 1 1

Riley Creek Lumber Company
Saw and Planer Mill
LaClede, Idaho

The permittee is hereby allowed to operate the equipment described herein subject to the emission limits and monitoring and reporting requirements specified herein.

SOURCE

Olivine burner and associated woodwaste handling

1. SOURCE DESCRIPTION

1.1 Process Description. This process involves the incineration of woodwaste in a Olivine Burner. This refractory lined woodwaste incinerator will be equipped with a auxiliary propane burner for start-up, shut-down, and normal operation to increase temperatures so that maximum combustion occurs. Woodwaste can be fed to the Olivine Burner by a series of conveyors, directly from the sawmill or from the woodwaste storage pile. Ashes from the Olivine Burner are periodically removed by a front end loader and transferred to a truck dump hopper which feeds the ash to dump trucks. The truck dump hauls the ashes offsite to a landfill.

1.2 Controls. Emissions from the Olivine Burner are automatically controlled by temperature and fan air control. Emissions associated with the woodwaste conveyor transfer points are uncontrolled.

2. EMISSION LIMITS

2.1 Particulate emissions from the Olivine Burner shall not exceed 0.2 lbs per 100 pounds of woodwaste incinerated as specified in IDAPA 16.01.1501 and

ADMINISTRATOR
DIVISION OF ENVIRONMENT

ISSUED January 13, 1989
Date

EXPIRES January 13, 1994
Date

HWE 0032

AIR POLLUTION OPERATING PERMIT

PERMITTEE, PROJECT, AND LOCATION

PERMIT NUMBER

0 2 4 0 - 0 0 2 7 - 1

Riley Creek Lumber Company
Saw and Planer Mill
LaClede, Idaho

The permittee is hereby allowed to operate the equipment described herein subject to the emission limits and monitoring and reporting requirements specified herein.

SOURCE

Olivine burner and associated woodwaste handling

16.01.1502 (Rules and Regulations for the Control of Air Pollution in Idaho), nor shall they exceed the pound per hour (lb/hr) and ton per year (T/y) number listed in Appendix A.

2.2 Particulate matter with diameters less than 10 microns (PM-10), nitrogen oxides (NOx), sulfur dioxide (SO2), carbon monoxide (CO), and volatile organic compounds (VOC), pound per hour (lb/hr) and ton per year (T/y) emission rates from the Olivine Burner, shall not exceed those values listed in Appendix A.

2.3 Visible emissions from the Olivine Burner shall not exceed twenty (20%) percent opacity for a period or periods aggregating more than three (3) minutes in any sixty (60) minute period, as required by the Department's "Evaluation of Visible Emissions Manual" (IDAPA 16.01.1201).

3. MONITORING AND OPERATING REQUIREMENTS

3.1 The temperature of the exit gasses from the olivine burner shall not be less than 1650 deg. F or greater than 1800 deg. F. Other operating temperature ranges may be mandated by the Department or requested by the permittee on the basis of the results of the start up source tests required in sections 3.3 and 3.4.

3.2 Fugitive emissions from this process shall be reasonably controlled as required in IDAPA

ADMINISTRATOR
DIVISION OF ENVIRONMENT

ISSUED January 13, 1989
Date

EXPIRES Januar 13, 1994
Date

AIR POLLUTION OPERATING PERMIT

PERMITTEE, PROJECT, AND LOCATION

PERMIT NUMBER

0240 - 0027 - ___

Riley Creek Lumber Company
Saw and Planer Mill
LaClede, Idaho

The permittee is hereby allowed to operate the equipment described herein subject to the emission limits and monitoring and reporting requirements specified herein.

SOURCE

Olivine burner and associated woodwaste handling

16.01.1251 and 16.01.1252.

3.3 The permittee shall conduct an emission test to measure particulates from the Olivine Burner vent using an emission testing method approved by the Department, in accordance with General Provision F of the Permit to Construct. Visible emissions shall be observed during the emission test using the method specified in the Department's "Procedures Manual." The Olivine Burner process weight rate (input) shall also be measured during the emission test.

3.4 The permittee shall conduct an emission test to measure carbon monoxide from the Olivine Burner vent using an emission testing method approved by the Department, in accordance with General Provision F of the Permit to Construct. Visible emissions shall be observed during the emission test using the methods specified in the Department's "Procedures Manual." The Olivine Burner process weight rate (input) shall also be measured during the emission test.

4. REPORTING REQUIREMENTS

4.1 Particulate emission test methods shall be submitted to the Idaho Air Quality Bureau for approval, within sixty (60) days of the proposed emission test date.

4.2 Carbon monoxide emission test methods shall be submitted to the Idaho Air Quality Bureau for approval, within sixty (60) days of the proposed

ADMINISTRATOR
DIVISION OF ENVIRONMENT

ISSUED January 13, 1989
Date

EXPIRES January 13, 1994
Date

HWE 0052

AIR POLLUTION OPERATING PERMIT

PERMITTEE, PROJECT, AND LOCATION

PERMIT NUMBER

0240 - 0027 - ___

Riley Creek Lumber Company
Saw and Planer Mill
LaClede, Idaho

The permittee is hereby allowed to operate the equipment described herein subject to the emission limits and monitoring and reporting requirements specified herein.

SOURCE

Olivine burner and associated woodwaste handling

emission test date.

4.3 All emission test data including the process weight rate and visible emissions observation data shall be reported to the Idaho Air Quality Bureau within 30 days of performing the emission test. The method for determining the process weight rate for each material flow in this process shall be reported with the emission test data. Copies of all data required to be recorded by this permit during the emission tests shall be submitted with the emission test data.

4.4 The permittee shall maintain on file the continuously recorded Olivine Burner exit gas temperature data for the most recent two year operating period.

5. INSTALLATION REQUIREMENTS

5.1 The permittee shall install and maintain an auxiliary propane burner on the Olivine Burner.

5.2 The permittee shall install, calibrate, and maintain a chart recorder which records gas temperatures exiting the Olivine Burner.

5.3 The permittee shall install and maintain a screen on top of the Olivine Burner unless it can be demonstrated that fly carbon emissions can be adequately controlled without one.

ADMINISTRATOR
DIVISION OF ENVIRONMENT

ISSUED January 13, 1989
Date

EXPIRES January 13, 1994
Date

AIR POLLUTION OPERATING PERMIT

PERMITTEE, PROJECT, AND LOCATION

PERMIT NUMBER

0 2 4 0 - 0 C 2 7 - [ ] [ ] [ ]

Riley Creek Lumber Company
Saw and Planer Mill
LaClede, Idaho

The permittee is hereby allowed to operate the equipment described herein subject to the emission limits and monitoring and reporting requirements specified herein.

SOURCE

Planer mill shavings cyclones; boiler fuel bin cyclone truck bin shavings cyclone; and associated shavings pneumatic conveyance systems.

1. SOURCE DESCRIPTION

1.1 Process Description. This process involves transferring shavings from the planar mill to the boiler fuel bin and the truck bin. Planar shavings will be collected by a pneumatic conveyance system and transferred to low-pressure cyclone #1. From cyclone #1, shavings will be pneumatically conveyed to cyclone #5. Shavings from cyclone #5 will be pneumatically conveyed to either the boiler fuel bin cyclone (#2) or the truck bin cyclone (#3). Shavings collected by cyclone #2 will be transferred to the boiler fuel bin. Shavings collected by cyclone #3 are transferred to the truck bin which deposits the shavings into trucks. Loaded trucks carry the shavings offsite.

1.2 Controls. Emissions resulting from the shavings pneumatic conveyance systems will be collected by cyclones #1, cyclone #2, cyclone #3, and cyclone #5 and are vented through cyclone vent #1, cyclone vent #2, cyclone vent #3, and cyclone vent #5, respectively. Emission associated with transferring shavings from the bottom of cyclone #5 to the boiler fuel bin are reduced because the boiler fuel bin is enclosed on three sides. Emissions associated with transferring shavings from the bottom of cyclone #3 to the truck bin are reduced because the fuel bin is

ADMINISTRATOR
DIVISION OF ENVIRONMENT

ISSUED January 13, 1989
Date

EXPIRES January 13, 1994
Date

HWE 0052

AIR POLLUTION OPERATING PERMIT

PERMITTEE, PROJECT, AND LOCATION

PERMIT NUMBER

0240 - 0027 - ___

Riley Creek Lumber Company
Saw and Planer Mill
LaClede, Idaho

The permittee is hereby allowed to operate the equipment described herein subject to the emission limits and monitoring and reporting requirements specified herein.

SOURCE

Planer mill shavings cyclones; boiler fuel bin cyclone; truck bin shavings cyclone; and associated shavings pneumatic conveyance systems.

entirely enclosed. Emissions associated with transferring shavings from the truck bin to the trucks are uncontrolled.

2. EMISSION LIMITS

2.1 Particulate and PM-10 emissions from cyclone vents #1, #2, #3, and #5 shall not exceed the pound per hour (lb/hr) and ton per year (T/y) values listed in Appendix A.

2.2 Visible emissions from cyclone vents #1, #2, #3 and #5 each shall not exceed twenty (20%) percent opacity for a period or periods aggregating more than three (3) minutes in any sixty (60) minute period, as required by the Department's "Evaluation of Visible Emissions Manual" (IDAPA 16.01.1201).

ADMINISTRATOR
DIVISION OF ENVIRONMENT

ISSUED January 13, 1989
Date

EXPIRES January 13, 1994
Date

HWE C052

AIR POLLUTION OPERATING PERMIT

PERMITTEE, PROJECT, AND LOCATION

PERMIT NUMBER

0240 - 0027 - ___

Riley Creek Lumber Company
Saw and Planer Mill
LaClede, Idaho

The permittee is hereby allowed to operate the equipment described herein subject to the emission limits and monitoring and reporting requirements specified herein.

SOURCE

Truck bin chip cyclone (cyclone #4) and associated chip pneumatic conveyance system.

1. SOURCE DESCRIPTION

1.1 Process Description. This process involves collecting and transferring chips from the sawmill and planar mill to trucks and rail cars. Chips from the mill and planar chippers will be pneumatically conveyed to truck bin chip cyclone (cyclone #4). Chips collected by cyclone #4 will be transferred to the truck chip bin which deposits chips into either trucks or rail cars. Trucks and rail cars haul the chips offsite.

1.2 Controls. Emissions resulting from the chip pneumatic conveyance system will be collected by cyclone #4 and vented through cyclone #4 vent. Emissions associated with transferring chips from the bottom of cyclone #4 to the truck chip bin are reduced because the bin is entirely enclosed. Emissions associated with transferring chips from the truck chip bin to trucks and rail cars are uncontrolled.

2. EMISSION LIMITS

2.1 Particulate and PM-10 emissions from cyclone vent #4 shall not exceed the pound per hour (lb/hr) and ton per year (T/y) values listed in Appendix A.

2.2 Visible emissions from cyclone vent #4 shall not exceed twenty (20%) percent opacity for a period or

ADMINISTRATOR
DIVISION OF ENVIRONMENT

ISSUED January 13, 1989
Date

EXPIRES January 13, 1994
Date

HWE 0052

AIR POLLUTION OPERATING PERMIT

PERMITTEE, PROJECT, AND LOCATION

PERMIT NUMBER

0240 - 0027 - ___

Riley Creek Lumber Company
Saw and Planer Mill
LaClede, Idaho

The permittee is hereby allowed to operate the equipment described herein subject to the emission limits and monitoring and reporting requirements specified herein.

SOURCE

Truck bin chip cyclone (cyclone #4) and associated chip pneumatic conveyance system.

periods aggregating more than three (3) minutes in any sixty (60) minute period, as required by the Department's "Evaluation of Visible Emissions Manual" (IDAPA 16.01.1201).

ADMINISTRATOR
DIVISION OF ENVIRONMENT

ISSUED January 13, 1989
Date

EXPIRES January 13, 1994
Date

AIR POLLUTION OPERATING PERMIT

PERMITTEE, PROJECT, AND LOCATION

PERMIT NUMBER

0 2 4 0 - 0 0 2 7 - [ ]

Riley Creek Lumber Company
Saw and Planer Mill
LaClede, Idaho

The permittee is hereby allowed to operate the equipment described herein subject to the emission limits and monitoring and reporting requirements specified herein.

SOURCE

Plant property and fugitive emissions sources.

1. SOURCE DESCRIPTION

1.1 Process Description. This process encompasses all of the fugitive emission sources occurring on the plant site. Sources of fugitive emissions include: vehicular traffic on paved and unpaved roadways; and material transfer points. Some of the fugitive emission sources have already been described in the previous sections of this permit.

A log debarker will be used to strip bark from the inner wood. Log debarking will be the first process occurring at the facility.

Log trucks, fork lifts, front end loaders, yard machines, and pick-ups will be operated on the plant site. Log trucks haul logs to the plant site on unpaved roads. Finished lumber is also hauled offsite by trucks. Fork lifts haul lumber from: the sawmills to the kiln; kilns to the planar; and the planar to the shipping area.

Sawdust from the sawmill will be mechanically conveyed onto the woodwaste storage pile. Front end loaders will be used to haul the woodwaste from the storage pile to the boiler fuel bin.

1.2 Controls. Emissions resulting from vehicle traffic on unpaved roads will be controlled by applying oil and

ADMINISTRATOR
DIVISION OF ENVIRONMENT

ISSUED January 13, 1989
Date

EXPIRES January 13, 1994
Date

HWE 0052

AIR POLLUTION OPERATING PERMIT

PERMITTEE, PROJECT, AND LOCATION

PERMIT NUMBER 0240 - 0027 - ___

Riley Creek Lumber Company
Saw and Planer Mill
LaClede, Idaho

The permittee is hereby allowed to operate the equipment described herein subject to the emission limits and monitoring and reporting requirements specified herein.

SOURCE

Plant property and fugitive emissions sources.

water on the roads. Emissions from the woodwaste storage pile are uncontrolled; however, they are considered to be negligible. When needed, emissions from the log debarker will be controlled by watering the logs before they are fed into the debarker.

2. EMISSION LIMITS

2.1 Particulate and PM-10 emissions from these fugitive emission sources shall not exceed the pound per hour (lb/hr) and ton per year (T/y) values listed in Appendix B.

3. MONITORING AND OPERATING REQUIREMENTS

3.1 At all times, fugitive emissions shall be reasonably controlled by the following methods, but not limited to the following methods, and as required in IDAPA 16.01.1251 and IDAPA 16.01.1252:

3.1.1 Using water sprays, chemicals, oils or dust suppressants on the plant property and all driving surfaces.

3.1.2 Routinely cleaning with water and maintaining all driving surfaces.

ADMINISTRATOR
DIVISION OF ENVIRONMENT

ISSUED January 13, 1989
Date

EXPIRES January 13, 1994
Date

HWE 0052

GENERAL PROVISIONS

A. All emissions authorized herein shall be consistent with the terms and conditions of this permit. The emission of any pollutant in excess of the limitations specified herein, or noncompliance with any other condition or limitation contained in this permit, shall constitute a violation of this permit and the Rules and Regulations for the Control of air Pollution in Idaho, and the Environmental Protection and Health Act, Idaho Code 39-101, et. seq.

B. The permittee shall at all times (except as provided in the Rules and Regulations for the Control of Air Pollution in Idaho) maintain in good working order and operate as efficiently as practicable, all treatment or control facilities or systems installed or used to achieve compliance with the terms and conditions of this permit and other applicable laws for the control of air pollution.

C. The permittee shall allow the Director, and/or his authorized representative(s), upon the presentation of credentials:

1) To enter upon the permittee's premises where an emission source is located, or in which any records are required to be kept under the terms and conditions of this permit; and

2) At reasonable times to have access to and copy any records required to be kept under the terms and conditions of this permit, to inspect any monitoring methods required in this permit, and to require stack emission testing in conformance with state approved or accepted EPA procedures when deemed appropriate by the Director.

D. Except for data determined to be confidential under Section 39-111, Idaho Code, all reports prepared in accordance with the terms of this permit shall be available for public inspection at the appropriate regional office of the Division of Environment.

E. Nothing in this permit is intended to relieve or exempt the permittee from compliance with any applicable federal, state, or local law or regulation, except as specifically provided herein.

F. In the event of any change in control or ownership of source(s) from which the authorized emissions emanate, the permittee shall notify the succeeding owner or controller of the existence of this permit by letter, a copy of which shall be forwarded to the Director.

G. This permit shall be renewable on the expiration date, provided the permittee submits any and all information necessary for the Director to determine the amount and type of air pollutants emitted from the equipment for which this permit is granted. Failure to submit such information within sixty (60) days after receipt of the Director's request shall cause the permit to be voided.

H. The Director may require the permittee to develop a list of Operation and Maintenance Procedures which must be approved by the Department. Such list of procedures shall become a part of this permit by reference, and the permittee shall adhere to all of the operation and maintenance procedures contained therein.

I. The permittee shall provide the Air Quality Bureau a minimum of ten (10) working days' notice prior to the scheduled date of any emissions test required pursuant to this permit. The permittee shall notify the Air Quality Bureau of any change in the testing schedule and shall provide at least one (1) working day's notice prior to conducting any rescheduled test. Any records or data generated as a result of such compliance tests shall be made available to the Department upon request.

J. The provisions of this permit are severable, and if any provision of this permit to any circumstance is held invalid, the application of such provision to other circumstances, and the remainder of this permit shall not be affected thereby.

K. Annual operating rates (e.g., fuel throughput) and schedules (e. g., hours per year), shall be made available to the Director upon request; such records to be maintained for the most recent two year period.

APPENDIX A: RILEY CREEK POINT SOURCE HOURLY (lb/h) AND ANNUAL (T/y) EMISSION LIMITS[a]

SOURCE	PARTICULATE (lb/h)	PARTICULATE (T/y)	PM-10 (lb/h)	PM-10 (T/y)	CO (lb/h)	CO (T/y)	NOx (lb/h)	NOx (T/y)	SOx (lb/h)	SOx (T/y)	VOC (lb/h)	VOC (T/y)
Boiler	22.1	96.2	20.6	90.0	38.3	167.2	2.5	10.2	0.6	2.5	5.4	23.4
Drying Source	107.0	[illegible]	[illegible]	[illegible]	[illegible]	[illegible]	[illegible]	[illegible]	[illegible]	[illegible]	[illegible]	[illegible]
Cyclone #1	9.8	20.3	1.0	2.0	-	-	-	-	-	-	-	-
Cyclone #2	5.7	11.8	0.6	1.2	-	-	-	-	-	-	-	-
Cyclone #3	7.2	15.0	0.7	1.5	-	-	-	-	-	-	-	-
Cyclone #4	9.9	20.5	1.0	2.1	-	-	-	-	-	-	-	-
Cyclone #5	9.8	20.3	1.0	2.0	-	-	-	-	-	-	-	-

[a] As determined by the Department's emission estimation methods.

APPENDIX B: RILEY CREEK FUGITIVE SOURCE HOURLY (lb/h) AND ANNUAL (T/y) EMISSION LIMIT[a]

SOURCE	PARTICULATE (lb/h)	PARTICULATE (T/y)	PM-10 (lb/h)	PM-10 (T/y)
Log Debarker	0.21	0.43	2.1×10^{-3}	4.3×10^{-3}
Material Transfer Points				
1. Woodwaste to the Boiler Fuel Bin	0.58	1.2	5.8×10^{-3}	1.2×10^{-2}
2. Shavings Bin #1 and #2 to trucks	0.79	1.64	7.9×10^{-3}	1.64×10^{-2}
3. Chip Bin to Rail Cars and Trucks	0.80	0.17	8.0×10^{-4}	1.7×10^{-4}
Unpaved Roads				
1. Log trucks	1.05	2.13	0.47	0.96
2. Yard machines	0.43	0.87	0.19	0.087
3. Fork lifts	0.29	0.60	0.14	0.27
4. Pick ups and misc. vehicles	0.012	0.024	0.005	0.011

[a] As determined by the Department's emission estimation methods.

STATE OF IDAHO

PERMIT TO CONSTRUCT
AN AIR POLLUTION
EMITTING SOURCE

PERMIT NUMBER

0 1 7 - 0 0 0 2 7

AQCR	CLASS	SIC
0 6 3	A 1	2 4 2 1

ZONE	UTM COORDINATE (km)
1 1	5 1 8 . 2 , 5 3 3 4 . 7

1. PERMITTEE
Riley Creek Lumber Company

2. PROJECT
Kipper & Sons Wood-Fired Boiler

3. MAILING ADDRESS	CITY	STATE	ZIP CODE
P. O. Box 220	Laclede	Idaho	83841

4. SITE LOCATION	NO. OF FULL TIME EMPLOYEES	PROPERTY AREA AT SITE (Acreage)
Bonner County	144	56

5. PERSON TO CONTACT	TITLE	TELEPHONE
Todd Brinkmeyer	Maintenance Manager	(208) 263-7574

6. EXACT PLANT LOCATION
South Highway 2, Riley Creek Road, Laclede, Idaho

7. GENERAL NATURE OF BUSINESS & KINDS OF PRODUCTS
Lumber, wood chips, hog fuel, and wood shavings

8. GENERAL CONDITIONS

This permit is issued according to the Rules for the Control of Air Pollution in Idaho, Section 16.01.01.200, and pertains only to emissions of air contaminants which are regulated by the State of Idaho and to the sources specifically allowed to be constructed by this permit.

This permit (a) does not affect the title of the premises upon which the equipment is to be located, (b) does not release the permittee from any liability for any loss due to damage to person or property caused by, resulting from, or arising out of the design, installation, maintenance, or operation of the proposed equipment, (c) does not release the permittee from compliance with other applicable federal, state, tribal or local laws, regulations, or ordinances, (d) in no manner implies or suggests that the Idaho Department of Health and Welfare, Division of Environmental Quality (DEQ) or its officers, agents, or employees, assumes any liability, directly or indirectly, for any loss due to damage to person or property caused by, resulting from, or arising out of design, installation, maintenance, or operation of the proposed equipment.

This permit is not transferable to another person, place, piece or set of equipment. This permit will expire if construction has not begun within two years of its issue date or if construction is suspended for one year.

This permit has been granted on the basis of design information presented with its application. Changes of design or equipment that result in any change in the nature or amount of emissions must be approved in advance by the DEQ unless exempted by the Rules for the Control of Air Pollution in Idaho sections 220 through 225.

Martin Bauer for ODL
ASSISTANT ADMINISTRATOR
DIVISION OF ENVIRONMENTAL QUALITY

DATE: December 31, 1996

GF/mb:\RILEY\RILEY016.PTC

PERMIT TO CONSTRUCT

PERMITTEE, PROJECT, AND LOCATION

Riley Creek Lumber Company
P.O. Box 220
Laclede, Idaho

PERMIT NUMBER

0 1 7 - 0 0 0 2 7

SOURCE

Kipper & Sons Wood-Fired Boiler

1. EMISSION LIMITS

1.1 Emission Limits

Particulate matter (PM) and carbon monoxide emissions from the Kipper & Sons wood-fired boiler shall not exceed any corresponding emission rate limit listed in Appendix A of this permit.

1.2 Other Emission Limits

PM emissions from the boiler stack shall not exceed 0.080 grains per dry standard cubic feet (dscf), corrected to eight percent (8%) oxygen, as required in IDAPA 16.01.01.675. Particulate concentrations shall be determined using procedures contained in the DEQ's "Procedures Manual for Air Pollution Control."

1.3 Opacity Limits

Emissions emanating from any stack, vent, or functionally equivalent opening shall not exceed twenty percent (20%) opacity aggregating more than three (3) minutes in any sixty (60) minute period as required in IDAPA 16.01.01.625. Opacity shall be determined using procedures contained in the DEQ's "Procedures Manual for Air Pollution Control."

2. OPERATING REQUIREMENTS

2.1 Control of Fugitive Emissions

Fugitive particulate emissions resulting from the operation of this facility including but not limited to, traffic areas, wood-waste handling equipment, ash handling equipment, and wood stockpiles shall be reasonably controlled as required in IDAPA 16.01.01.650.

2.2 Boiler Loading Rate

The maximum loading of the Kipper & Sons wood-fired boiler shall not exceed one hundred twelve tons per day (112 T/day) of wood-waste.

2.3 Air Pollution Control Device Operation

The air pollution control device shall be operated and maintained within manufacturer's and Operation and Maintenance (O&M) Manual specifications. Documentation of the operating specifications shall remain on-site at all times and shall be made available to DEQ representatives upon request.

2.4 Operations and Maintenance Manual Requirements

Within sixty (60) days of initial start-up of the Kipper & Sons wood-fired boiler, the permittee shall have developed an Operations and Maintenance Manual (Manual) for this equipment which describes the procedures that will be followed to comply with General Provision B and Section 2.3 of this permit. This Manual shall remain on-site at all times and copies shall be made available to DEQ representatives upon request.

DATE: December 31, 1996

2.5 Olivine Burner

The permittee shall render the Olivine Burner and associated wood-waste handling equipment inoperable in conjunction with the start-up of the Kipper & Sons wood-fired boiler.

2.6 Wood-Waste Handling System

The wood-waste handling system, including all conveyers and storage bins, shall be enclosed to minimize fugitive emissions.

3. MONITORING REQUIREMENTS

3.1 Operating Parameters Monitoring

The permittee shall monitor and record the quantity of wood-waste throughput to the wood-fired boilers in tons per day (T/day). The most recent two (2) year's compilation of records shall be kept on-site in a log and be made available to DEQ representatives upon request.

3.2 Performance Testing

Within sixty (60) days after achieving the maximum production rate at which the Kipper & Sons wood-fired boiler will operate, but no later than one hundred eighty (180) days after initial start-up, a performance test shall be conducted to demonstrate compliance with the carbon monoxide emission limit referenced in Section 1.1, as well as the emission limits specified in Sections 1.2 and 1.3 of this permit. All performance testing shall be performed in accordance with DEQ's "Procedures Manual for Air Pollution Control," and General Provision F of this permit.

4. REPORTING REQUIREMENTS

4.1 Performance Test Protocol

The permittee shall submit a test protocol for the performance test required in Section 3.3 of this permit to DEQ for approval at least thirty (30) days prior to each test date.

4.2 Performance Test Report

The permittee shall submit a performance test report, including all required process data, for the test required in Section 3.3 of this permit to DEQ within forty-five (45) days of the date on which each performance test is concluded.

4.3 Certification of Documents

All documents, including, but not limited to, records, monitoring data, supporting information, testing reports or compliance certifications submitted to the DEQ shall contain a certification by a responsible official in accordance with IDAPA 16.01.01.123. The certification shall state that, based on information and belief formed after reasonable inquiry, the statements and information in the document are true, accurate and complete.

PERMIT TO CONSTRUCT

PERMITTEE, PROJECT, AND LOCATION

Riley Creek Lumber Company
P.O. Box 220
Laclede, Idaho

PERMIT NUMBER

0 1 7 - 0 0 0 2 7

SOURCE

Kipper & Sons Wood-Fired Boiler

Appendix A

Kipper & Sons Wood-Fired Boiler

Maximum Allowable Emission Limits

	Emission Limits	
	(lb/hr)	(T/yr)
Particulate Matter	3.5	15.3
Carbon Monoxide	69.9	306

DATE: December 31, 1996

CF/bc:\RILEY\RILSY01A.PTC

RILEY CREEK
LUMBER COMPANY

RECEIVED
APR 24 2000
DIV. OF ENVIRONMENTAL QUALITY
TECHNICAL SERVICES OFFICE

April 20, 2000

Bill Rogers, Air Quality Engineer
Division of Environmental Quality
State Technical Services
1410 North Hilton
Boise, ID 83706-1255

RE: Riley Creek Lumber Company: PTC 0240-0027 and PTC 017-00027

Dear Mr. Rogers:

Riley Creek Lumber Company (Riley Creek) owns and operates a sawmill and planer facility located near Laclede, Idaho. Two Idaho air quality permits have been issued for this facility. The original permit, PTC 0240-0027 was issued in January 1989 for all of the fugitive and point source emissions points at the facility including the Perry Smith ABCO hog fuel boiler (Boiler #1).

PTC 017-00027 was issued in December 1996 for the installation of a Kipper & Sons hog fuel boiler (Boiler #2). In July 1997, Riley Creek submitted a permit application for construction of two additional dry kilns at the facility. IDEQ responded with a letter stating that the proposed kilns met the requirements for a Category IV exemption and a PTC was not required.

Riley Creek submitted a Tier I Operating Permit application in 1996. Since that time, we have improved emission controls on Boiler #1, permitted and installed Boiler #2, removed several cyclones, and taken the Olivine burner out of service. We will submit a revised Tier I permit application within the next week, which reflects all of the equipment changes at the facility and address changes that have been made in Idaho air quality regulations since the original application was submitted.

Because IDEQ must incorporate conditions of any existing air quality permits into the Tier I permit, Riley Creek is submitting this request to modify specific conditions of the two existing PTC permits to address current operations and equipment. A signed copy of the Idaho air quality permit application General Information Form is attached to this letter.

RILEY CREEK LUMBER COMPANY ◆ RILEY CREEK ROAD ◆ PO BOX 220 ◆ LACLEDE, IDAHO 83841-0220 ◆ 208-263-7574 ◆ FAX 208-263-9375

Requested Changes to PTC 0240-0027:

Page 1 of 17, Item 5. Contact Person is Steve Spletstoser and his title is Operations Manager.

Page 2 of 17. Condition 1.1. Replace the word "incineration" with "combustion." The boiler uses bark and wood for fuel and is not used to incinerate.

Change Condition 2.2 to include the ESP as follows:

1.2 *Controls. Emissions from the boiler are controlled by a multiclone and an electrostatic precipitator (ESP) and are vented through the boiler stack. Emissions from the boiler fuel bin are reduced because it is enclosed on three (3) sides.*

Page 3 of 17 appears to be a copy of Page 2 of 17 and should be removed.

Page 4 of 17, Conditions 3.1 and 4.1. The required source test has been completed. We request that these conditions be removed or updated to make the permit current.

Pages 5 - 8 of 17. The Olivine burner and associated wood-waste handling equipment is inoperable and will eventually be dismantled. Remove all of the Olivine-related conditions.

Page 9 of 17. Riley Creek has eliminated many of the emission points at the planer mill. Change the Source Description as follows:

Planer mill shavings cyclones; ~~boiler fuel bin cyclone; truck bin shavings cyclone;~~ and associated shavings pneumatic system.

Revise Condition 1.1 as follows:

1.1 *Process Description. This process involves transferring shavings from the planer mill to the ~~boiler fuel bin and the~~ truck bin. Planer shavings ~~will be~~ are collected by a pneumatic conveyance system and transferred to ~~low pressure cyclone #1. From cyclone #1, shavings will be pneumatically conveyed to cyclone #5~~ the planer shavings cyclone. A small cyclone and dust system filters the air in the chipper room and deposits into the shavings system. ~~Shavings from cyclone #5 will be pneumatically conveyed to either the boiler fuel bin cyclone (#2) or the truck bin cyclone (#3). Shavings collected by cyclone #2 will be transferred to the boiler fuel bin.~~ Shavings collected by ~~cyclone #3~~ the planer shavings*

cyclone are transferred via conveyor to the truck bin which deposits the shavings into trucks. Loaded trucks carry the shavings offsite.

Revise Condition 1.2 as follows:

1.2 Controls. Emissions resulting from the shavings pneumatic conveyance system will be collected by ~~cyclones #1, cyclone #2, cyclone #3, and cyclone #5~~ and are vented through ~~cyclone vent #1, cyclone vent #2, cyclone vent #3, and cyclone vent #5, respectively~~ the planer shavings cyclone. ~~Emission associated with transferring shavings from the bottom of cyclone #5 to the boiler fuel bin are reduced because the boiler fuel bin is enclosed in three sides.~~ Emissions associated with transferring shavings from the bottom of ~~cyclone #3~~ the planer shavings cyclone to the truck bin are reduced because the ~~fuel~~ conveyance system and truck bin are enclosed. Emissions associated with transferring shavings from the truck bin to the trucks are uncontrolled.

Page 10 of 17. Revise Conditions 2.1 and 2.2 as follows:

2.1 Particulate and PM-10 emissions from ~~cyclone vents #1, #2, #3, and #5~~ the planer shavings cyclone shall not exceed the pound per year (lb/hr) and ton per year (T/y) values listed in Appendix A.

2.2 Visible emissions from ~~cyclone vents #1, #2, #3 and #5 each~~ the planer shavings cyclone shall not exceed twenty (20%) percent opacity...

Page 11 of 17 contains conditions for the chip handling system. Riley Creek has removed all of the chip cyclones. Chips are either transferred pneumatically to a target box at the rail car load out or conveyed via enclosed chain conveyor to the truck bin. Because target boxes are generally treated as fugitive sources, we suggest that all of the chip handling conditions be removed. The chip handling emissions should be included in "plant property and fugitive emissions sources" as listed on Page 13 of 17.

If DEQ elects to retain the separate chip handling section, we request the following revisions:

Page 11 of 17. Change the Source Description as follows:

The rail car target box ~~chip cyclone (cyclone #4)~~ and associated chip pneumatic conveyance system.

1.1 *Process Description.* *This process involves collecting and transferring chips from the sawmill and planer mill to rail cars. Chips from the mill and planer chippers ~~will be~~ are pneumatically conveyed to ~~truck bin chip cyclone (cyclone #4)~~ the rail car target box. ~~Chips collected by cyclone #4 will be transferred to the truck chip bin which deposits chips into either trucks or rail cars.~~ Rail cars haul the chips offsite.*

1.2 *Emissions resulting from the chip pneumatic conveyance system ~~will be collected by cyclone #4 and~~ are vented through the target box. ~~cyclone #4 vent. Emissions associated with transferring chips from the bottom of cyclone #4 to the truck chip bin are reduced because the bin is entirely enclosed.~~ Emissions associated with transferring chips from the truck chip bin to trucks and rail cars are uncontrolled.*

Eliminate Condition 2.1. Cyclone #4 has been removed. Change Condition 2.2 as follows:

2.2 *Visible emissions from ~~cyclone vent #4~~ the target box shall not exceed twenty (20%) percent opacity ...*

Page 13 of 17. Revise Condition 1.1 as follows:

1.1 Process Description. Delete the fourth paragraph of the process description and replace it with the following:

Sawdust from the sawmill is mechanically conveyed into the truck bins. Bark is transported mechanically or by front end loader to the boiler fuel bin.

Riley Creek waters logs as need in the log yard to maintain the wood quality but the debarker area is not equipped with water sprays. We request that the spray language be removed. Riley Creek applies water to the roads but not oil. Revise Condition 1.2 as follows:

1.2 *Controls.* *Emissions resulting from vehicle traffic on unpaved roads will be controlled by applying ~~oil and~~ water on the roads. Emissions from the wood waste hog fuel storage pile are uncontrolled; however, they are considered to be negligible. ~~When needed, emissions form the log debarker will be controlled by watering the logs before they are fed into the debarker.~~*

Page 14 of 17. Eliminate Condition 2.1. The fugitive emissions estimates should not become permit limits. There is no regulatory basis for these limits.

Modify Condition 3.1.1 as shown below. Riley Creek does not use oil or chemicals other than dust suppressants on the roads.

3.1.1 Using water sprays, ~~chemicals, oils~~, or dust suppressants on the plant property and all driving surfaces.

Page 16 of 17. Appendix A.

- Emissions estimates for boiler gaseous emissions should not be limits because there is no regulatory basis for these limits. Only the boiler particulate limit has a regulatory basis. Remove emission limits for CO, NOx, SOx and VOC. Boiler particulate emissions are limited to 22.1 lb/hr and 96.4 tpy.

- Remove limits for the Olivine burner.

- Remove all of the listed cyclones and replace with the Planer Shavings Cyclone and the Planer Chipper Room Dust Cyclone. The Planer Chipper Room Dust Cyclone exhaust is currently filtered and vented indoors, but Riley Creek has vented the cyclone outdoors in the past and would like the flexibility to change the system if it becomes necessary.

  The Planer Shavings Cyclone emissions should be based on 8,760 hours per year, not on 4,200 hours per year as previously calculated. There is no standard limiting the hours of operations. Planer Cyclone particulate emissions are calculated as follows based on Idaho DEQ emission factors:

  Total Particulate:

  38,500 cfm * 0.03 grains/scf * 60 min/hr * 1 lb/7,000 grains = 9.9 lb/hr
  9.9 lb/hr * 8,760 hr/yr * 1 ton/2000 lb = 43.4 tpy

  PM10:

  38,500 cfm * 0.015 grains/scf * 60 min/hr * 1 lb/7,000 grains = 5.0 lb/hr
  5.0 lb/hr * 8,760 hr/yr * 1 ton/2000 lb = 17.5 tpy

- Emissions from the Planer Chipper Room Dust Cyclone are calculated with the same emission factors and hours of operation as shown above. The exhaust flow rate for this cyclone is 3,500 cfm. The estimated emissions are:

TSP:	0.90 lb/hr, 3.94 tpy
PM_{10}:	0.45 lb/hr, 1.97 tpy

- Remove Page 17 of 17. Fugitive emissions estimates are not permit limits.

Requested Changes to PTC 017-00027:

Page 2 of 6. Condition 2.2 limiting boiler fuel loading rate is not workable requirement for the following reasons:

- Riley Creek is able to count loaders of fuel at this time because they have not yet built an automated fuel feed system. Once an automated fuel feed system is installed, it will no longer be possible to track the weight of fuel.

- Because the fuel is stored outdoors, it picks up weight due to rain, snow and ice. In the winter when steam demand is highest, Riley Creek could be forced to curtail production because the fuel is heavy with snow.

- The current loading rate of 112 tons of hog fuel per day is not enough fuel to fire the boiler to its full capacity. The loading rate was apparently miscalculated.

Riley Creek is requesting that the fuel-loading rate be replaced with a boiler steaming rate limit. We chart boiler-steaming rate on a continuous recorder and keep the records on file. We request that this Condition 2.2 be revised as follows:

2.2 Boiler ~~Loading~~ Steaming Rate

The maximum ~~loading~~ steaming rate of the Kipper & sons wood-fired boiler shall not exceed ~~one hundred twelve tons per day (112 T/day) of wood waste~~ 40,000 pounds of steam per hour (pph).

Page 3 of 6. Eliminate Condition 2.5 because the Olivine Burner is no longer in service.

Riley Creek feeds Boiler #2 through a hopper and a series of conveyors. Emissions from this system are generated primarily at the drop points and not along the moving conveyors. The conveyor drop points are surrounded on all sides to prevent wind from blowing the material. The conveyors and the

hopper are enclosed on the sides but not on top. There is no practical way place a cover on the fuel hopper at the fuel pile. We request that Condition 2.6 be revised as follows:

2.6 *Wood-waste Handling System*

Conveyors and drop points in the ~~The wood-waste~~ fuel handling system, ~~including all conveyors and storage bins,~~ shall be enclosed on the sides to minimize fugitive emissions.

We request that Condition 3.1 be revised to require monitoring of steam instead of wood weight as discussed above.

3.1 *Operating Parameters Monitoring*

The Permittee shall monitor and record the ~~quantity of wood wast throughput to the wood-fired boilers in tons per day (T/day)~~ The steam production rate of the wood-fired boiler pounds of steam per hour. The most recent two (2) year's compilation of records shall be kept on-site in a log and be made available to DEQ representatives upon request.

Condition 3.2 has been fulfilled and should be removed or updated.

Page 6 of 6, Appendix A.

Input and output information for Boiler #2 are incorrect. The original permit application forms for the boiler listed the boiler size as 35,000 pph when it should be 40,000 pph. More significantly, the permit application forms listed the Rated Heat Input Capacity as 35 mmBtu/hr. This conversion from steaming rate to heat input rate assumed boiler efficiency of 100% which is not reasonable for a hog fuel boiler. Fuel consumption rates were calculated based on the stated heat input capacity and are not correct for this boiler.

The correct calculations for Boiler #2 are shown below.

- Boiler capacity is 40,000 pounds of steam per hour
- Estimated Steam Enthalpy is 1,100 pounds per hour
- Estimated boiler efficiency is 65%

Boiler heat input rate is calculated follows:

[40,000 lb/hr * 1,100 Btu/lb / (.65)] /.[1x10^6 mmBtu/Btu] = 67.7 mmBtu/hr

Fuel Consumption for Boiler #2 should be calculated as follows:

(67,700,000 Btu/hr) /(4,500 Btu/lb * 2000 lb/ton) = 7.52 tons/hr
7.52 tons fuel per hour * 8,760 hours per year = 65,900 tons/year

The particulate matter mass emission limit for Boiler #2 is also incorrect. As calculated, the mass emission rate limit of 3.5 lb/hr would allow the boiler to produce only 5,000 dscfm flue gas (at 8% oxygen). The mass emission rate limits are not consistent with the regulatory grain loading limit of 0.08 gr/dscf at 8% oxygen. The correct calculations are shown below:

Boiler flue gas flow rate is estimated from 40 CFR 60 Appendix A, Method 19. The F-factor for wood bark is 9,600 dscf/mmBtu at 0% oxygen. Calculated flowrate at 0% oxygen is:

67.7 mmBtu/hr * 9,600 dscf/mmBtu * (1 hr/60 min) = 10,830 dscfm

Corrected to 8% oxygen:

10,830 dscfm * (20.9/(20.9-8)) = 17,600 dscfm @ 8% oxygen

The allowable mass emission rate is calculated based on the Idaho regulatory limit of 0.08 gr/dscf @ 8% oxygen as follows:

17,600 dscfm * 0.08 grains/scf * 60 min/hr * 1 lb/7,000 grains = 12.1 lb/hr
12.1 lb/hr * 8,760 hr/yr * 1 ton/2000 lb = 53.0 tpy

Please change the Boiler #2 mass emission rate limits to 12.1 lb/hr and 53.0 tpy.

We appreciate all of your assistance with this permit.

Sincerely,

S. D. Spletstoser

Steve Spletstoser, Operations Manager
RILEY CREEK LUMBER COMPANY

Enc.

cc Diane Lorenzen, Lorenzen Engineering, Inc.

SECTION 1: GENERAL INFORMATION

COMPANY & DIVISION NAME	Riley Creek Lumber Company
STREET ADDRESS OR P.O. BOX	P.O. Box 35
CITY	Laclede
STATE	ID
ZIP	83841
PERSON TO CONTACT	Steve Spletstoser
TITLE	Operations Manager
PHONE NUMBER	(208) 263-7574
EXACT PLANT LOCATION	SW1/4 SE1/4 Section 30, Township 56 North, Range 5 West
GENERAL NATURE OF BUSINESS	Sawmill
NUMBER OF FULL-TIME EMPLOYEES	approx. 140
PROPERTY AREA (ACRES)	66
REASON FOR APPLICATION	5

(1) Permit to Construct a new facility;
(2) Permit to Modify an existing source;
(3) Permit to Construct a new source at an existing facility;
(4) Change of Owner or Location;
(5) Tier I Permit to Operate;
(6) Tier II Permit to Operate

DISTANCE TO NEAREST STATE BORDER (MILES)	12		
PRIMARY SIC	2421	SECONDARY SIC	
PLANT LOCATION COUNTY	Bonner	ELEVATION (FT)	2100
UTM ZONE	11		
UTM (X) COORDINATE (KM)	518.18 E	UTM (Y) COORDINATE (KM)	5334.72 N

NAME OF FACILITIES	LOCATION OF OTHER FACILITIES

List all facilities within the state that are under your control, or under common control, and have emissions to the air. If none, so state

OWNER OR RESPONSIBLE OFFICIAL	Marc Brinkmeyer
TITLE OF RESPONSIBLE OFFICIAL	Owner

Based on information and belief formed after reasonable inquiry, I certify the statements and information in this document are true, accurate, and complete.

SIGNATURE OF OWNER OR RESPONSIBLE OFFICIAL

DATE 4/21/00

RECEIVED
MAY 15 2001
IDHW-DEQ
Coeur d'Alene Field Office

APPLICATION FOR
AIR QUALITY PERMIT MODIFICATION

Facility Address
Riley Creek Lumber Company
P.O. Box 220
Laclede, Idaho 83841

Prepared By:
Lorenzen Engineering, Inc.
11 Friendship Lane, Suite 102
Montana City, Montana 59634

May 2001

TABLE OF CONTENTS

1.0 INTRODUCTION 1
- 1.1 Summary 1
- 1.2 Permitting Requirements 1
- 1.3 Application 1

2.0 SITE AND PROCESS DESCRIPTION 2
- 2.1 Site Location 2
- 2.2 Description of Site 2
- 2.3 Summary of Modifications 2

3.0 EMISSION INVENTORY 6
- 3.1 Planer Shavings Cyclone Baghouse Emission Rates 6
- 3.2 Comparison of Future Potential and Current Actual Emission Rates . 6

4.0 EMISSIONS REGULATORY ANALYSIS 7
- 4.1 Permit Requirements 7
- 4.2 Regulatory Requirements 7
- 4.3 PSD, NSPS and NESHAPs 7
- 4.4 Compliance with Permitting Regulations 8
- 4.5 Visible Air Contaminants 8
- 4.6 Process Weight Rule 8

LIST OF TABLES

Table 3.1 Proposed Particulate Emission Changes 6
Table 4.1 Potentially Applicable Regulations 7
Table 4.2 Process Weight Rule Compliance 8

LIST OF FIGURES

Figure 1: USGS Map - Site Location Map 3
Figure 2: Facility Plan 4
Figure 3: Plant Flow Diagram 5

LIST OF APPENDICES

Appendix A: Permit Application Forms
Appendix B: Actual and Potential Emissions Inventory Calculations

1.0 INTRODUCTION

1.1 Summary

Riley Creek Lumber Company (Riley Creek) is submitting this air quality permit application to the Idaho Department of Health and Welfare, Department of Environmental Quality (DEQ) in accordance with the requirements of IDAPA 16.01.0201 (Rules and Regulations for the Control of Air Pollution in Idaho) for equipment changes at their lumber mill in Laclede, Idaho.

Primary processes at the Laclede facility include a sawmill, planing mill, and dry kilns. Steam to heat the dry kilns is provided by two wood-fired boilers. This permit application addresses the installation of a baghouse to control emissions from the existing planer shavings cyclone.

The change in emissions for permitting purposes is defined as the difference between the proposed potential emissions and the current actual emissions from the facility. Installation of the baghouse will result in decreased emissions of total suspended particulate (TSP) and particulate matter smaller than 10 μm (PM_{10}).

1.2 Permitting Requirements

The proposed changes will be incorporated into PTC #017-00027. Riley Creek filed an updated Tier I operating permit application for the Laclede facility in April 2000.

1.3 Application

In accordance with DEQ requirements, permit application forms have been completed and are attached to this document. The application forms have been signed by a responsible official from Riley Creek and are included in Appendix A.

2.0 SITE AND PROCESS DESCRIPTION

2.1 Site Location

Riley Creek Lumber Company (Riley Creek) owns and operates a sawmill in Laclede, Idaho. The facility is located off Riley Creek Road, between Highway 2 and the Pend Oreille River. The mill is situated in Bonner County in the SW¼ SE¼, Section 30, Township 56 North, Range 5 West. UTM coordinates for the site are Zone 11, Easting 518.18 kilometers, and Northing 5334.72 kilometers. The elevation of the site is approximately 2,100 feet above sea level.

The Riley Creek mill is approximately 60 miles south of the Canadian border. It is 33 miles west of the Montana border and 18 miles east of the Washington border. The area surrounding the Riley Creek facility is classified as attainment for all air pollutants.

2.2 Description of Site

Figure 1 provides a portion of a United States Geological Survey (USGS) 7.5 minute map which indicates the plant site. A plot plan showing the building locations and emission points referenced in this application is provided in Figure 2. A plant flow diagram is included as Figure 3.

2.3 Summary of Modifications

The planer mill receives dried lumber from the kilns where the lumber is planed and trimmed. Trimmed ends are chipped and transferred pneumatically to the railcar target box. Shavings generated through the planer process are collected pneumatically by the planer shavings cyclone. Shavings from the cyclone are conveyed to a truck bin for loadout.

The planer shavings cyclone baghouse will control emissions from the planer shavings cyclone.

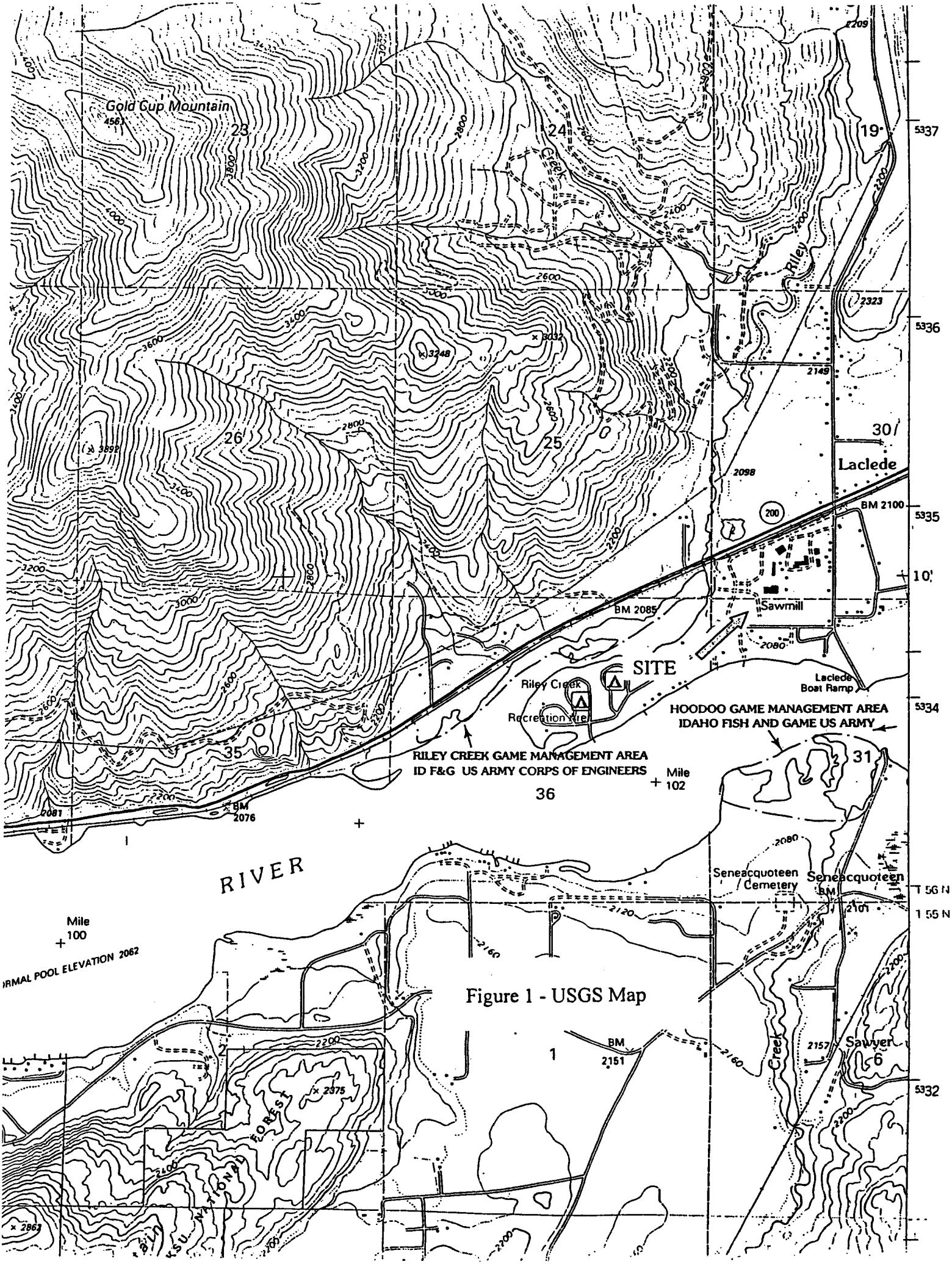

Figure 1 - USGS Map

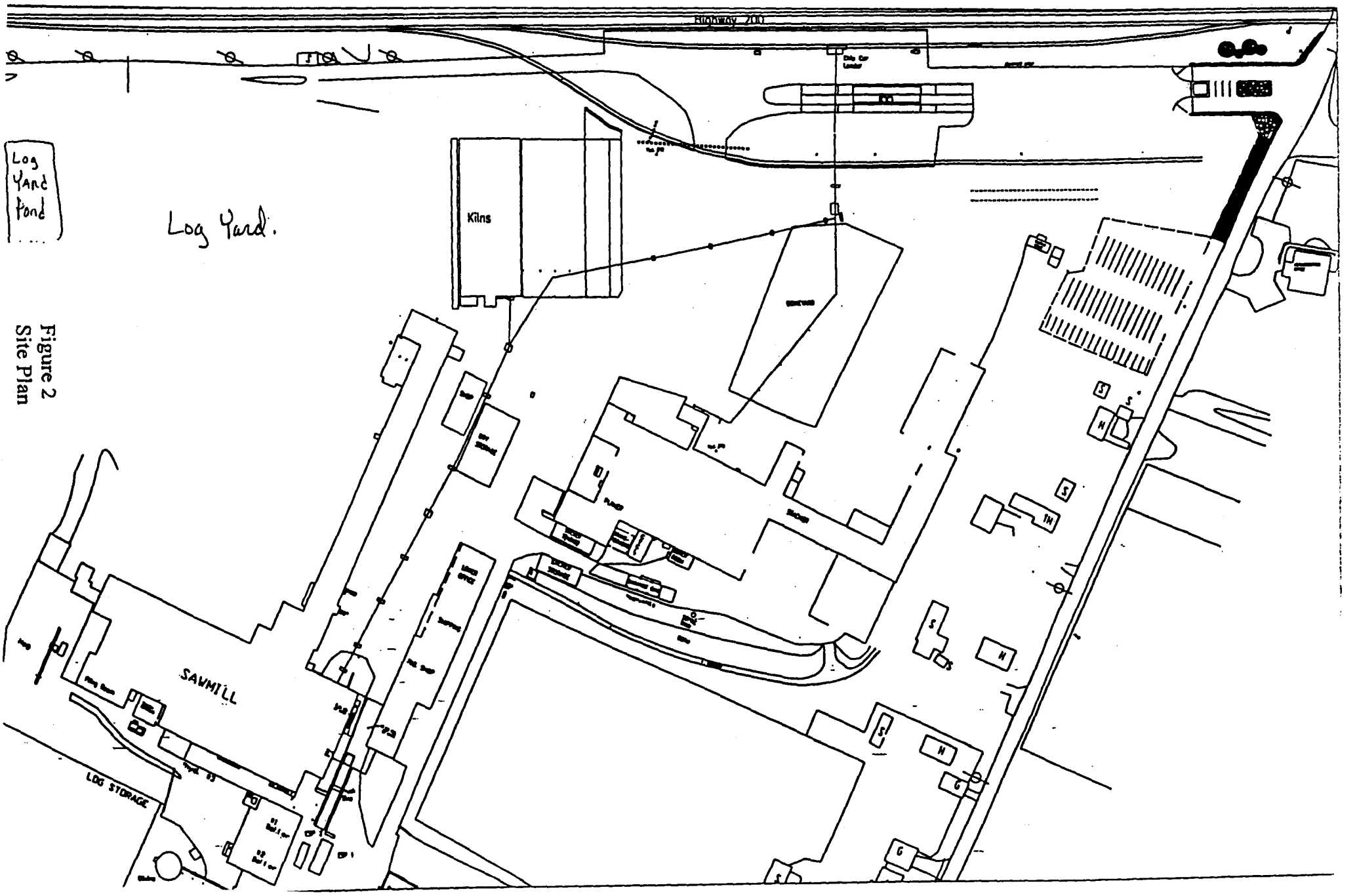

Figure 2
Site Plan

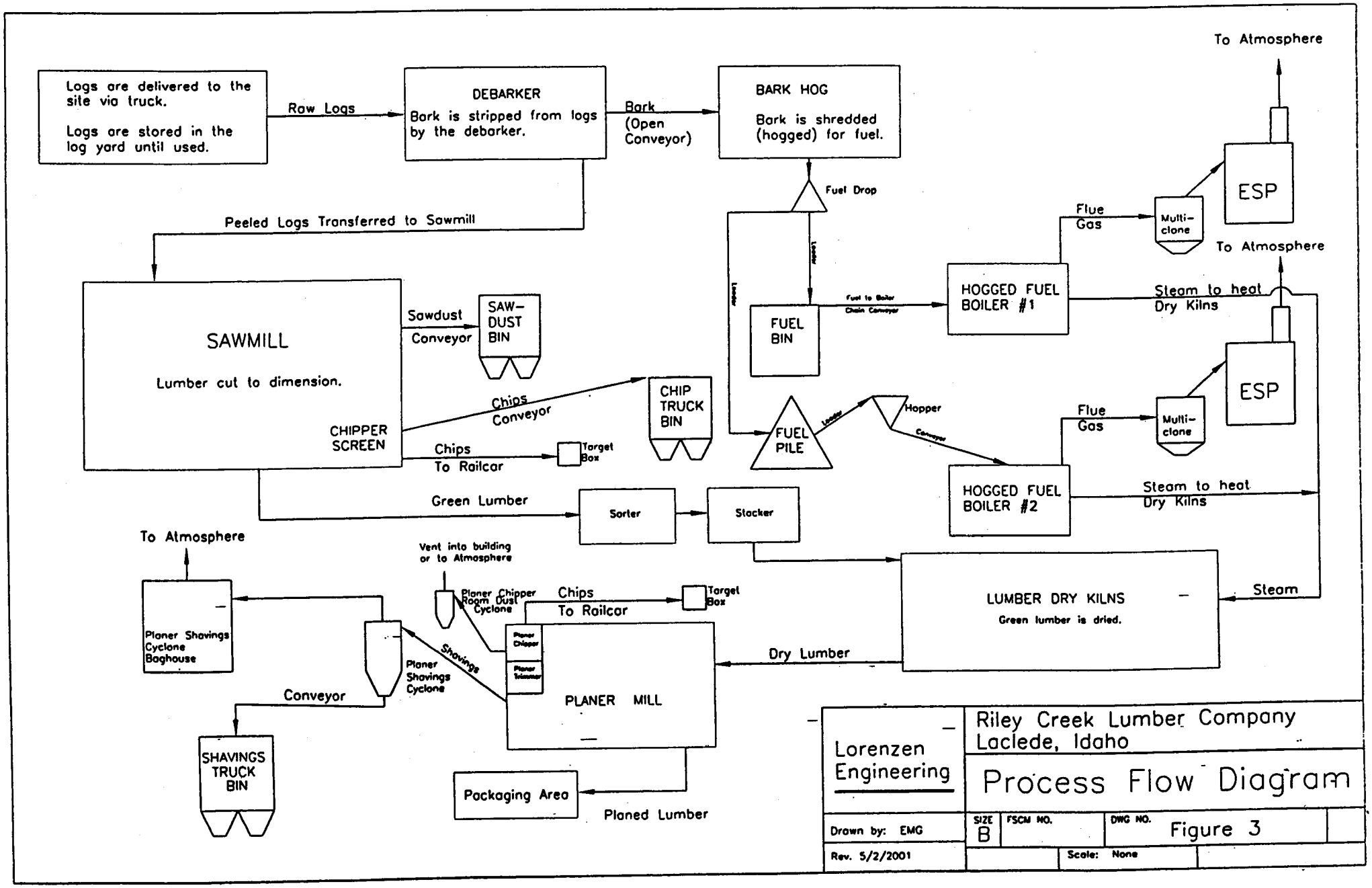
Logs are delivered to the site via truck.
Logs are stored in the log yard until used.
Raw Logs
DEBARKER
Bark is stripped from logs by the debarker.
Bark (Open Conveyor)
BARK HOG
Bark is shredded (hogged) for fuel.
Fuel Drop
Peeled Logs Transferred to Sawmill
SAWMILL
Lumber cut to dimension.
CHIPPER SCREEN
Sawdust Conveyor
SAW-DUST BIN
Chips Conveyor
CHIP TRUCK BIN
Chips To Railcar
Target Box
FUEL BIN
Fuel to Boiler Chain Conveyor
FUEL PILE
Hopper
HOGGED FUEL BOILER #1
HOGGED FUEL BOILER #2
Flue Gas
Multi-clone
ESP
To Atmosphere
Steam to heat Dry Kilns
Green Lumber
Sorter
Stacker
LUMBER DRY KILNS
Green lumber is dried.
Steam
Dry Lumber
PLANER MILL
Planer Chipper
Planer Trimmer
Chips To Railcar
Target Box
Planer Chipper Room Dust Cyclone
Vent into building or to Atmosphere
Shavings
Planer Shavings Cyclone
Planer Shavings Cyclone Baghouse
Conveyor
SHAVINGS TRUCK BIN
Packaging Area
Planed Lumber
Lorenzen Engineering
Riley Creek Lumber Company
Laclede, Idaho
Process Flow Diagram
Drawn by: EMG
Rev. 5/2/2001
SIZE B
FSCM NO.
DWG NO.
Figure 3
Scale: None

3.0 EMISSION INVENTORY

The only emissions from the proposed baghouse are particulate matter.

3.1 Planer Shavings Cyclone Baghouse Emission Rates

Particulate emissions from the planer shavings cyclone baghouse are calculated based on Idaho DEQ emission factors. The planer shavings cyclone baghouse flow is 50,000 dry standard cubic feet per minute (dscfm) and the maximum hours of operation are 8,760 hours per year.

TSP Emission Factor:	0.005 gr/dscf (Manufacturer's Guaranteed Rate)
Emission Calculation:	0.005 gr/dscf * 1 lb/7000 grains * 50,000 dscfm * 60 min/hr = 2.14 lb/hr
	2.14 lb/hr * 8,760 hr/yr * 1 ton/2,000 lb = 9.39 tpy

3.2 Comparison of Future Potential and Current Actual Emission Rates

Estimates of existing actual emissions and proposed (future) potential emissions for particulate emissions have been calculated and are compared below. Existing actual emissions have been estimated based on averaged planer production information for the years 1999 and 2000. Calculations showing the actual emissions and the proposed potential emissions are included in Appendix B.

Table 3.1 Proposed Particulate Emission Changes

Source	Actual (tpy)	Proposed(tpy)	Change (tpy)
TSP			
Planer Shavings Cyclone Baghouse	20.81	9.39	-11.42
Net Change			**-11.42 tpy**
PM_{10}			
Planer Shavings Cyclone Baghouse	10.41	9.39	-1.02
Net Change			**-1.02 tpy**

4.0 EMISSIONS REGULATORY ANALYSIS

4.1 Permit Requirements

The changes proposed in this permit application constitute an alteration of an air contaminant source. Under Idaho air quality regulations (IDAPA 58.01.01.0201), an application for a permit alteration is required. Section 3 of this application contains the emission inventory for the proposed changes at the Riley Creek facility.

Ambient air quality impacts will be less for the proposed cyclone baghouse than for the existing cyclone.

4.2 Regulatory Requirements

Regulations which may be applicable to the proposed permit changes at the Riley Creek facility are listed in Table 4.1 below.

Table 4.1 Potentially Applicable Regulations

1.	IDAPA 58.01.01.201	Permit to Construct Required
2.	IDAPA 58.01.01.202	Application Procedures
3.	IDAPA 58.01.01.625	Visible Emissions
4.	IDAPA 58.01.01.703	Particulate Process Weight Rule

Section 4.3 explains why Prevention of Significant Deterioration (PSD) and New Source Performance Standards (NSPS) do not apply to this facility. Section 4.4 describes compliance with the listed permitting regulations from Section 58.01.01.200 *et seq.* Section 4.5 contains an analysis of Visible Emissions compliance. Compliance with the Process Weight Rule is discussed in Section 4.6.

4.3 PSD, NSPS and NESHAPs

The proposed changes do not trigger PSD permitting because the changes are less than the PSD significant increase levels.

There are no New Source Performance Standard (NSPS) regulations which are applicable to this application.

There are no National Emission Standards for Hazardous Air Pollutants (NESHAPs) which are applicable to this application.

4.4 Compliance with Permitting Regulations

Riley Creek is required to obtain a permit for the changes at their mill as described in IDAPA 58.01.01.201: The source is not eligible for a permit exemption under Sections 220 through 223. Riley Creek has complied with all the application procedures contained in IDAPA 58.01.01.202. The application materials also show that the facility will comply with all the conditions of Section 203. The current proposed change does not include a source of toxic air pollutants.

4.5 Visible Air Contaminants

Riley Creek will comply with the visible emission standard of IDAPA 58.01.01.625. No visible emission shall exceed 20% opacity for any aggregate 3-minute period during any 60-minute period from any point source.

The new baghouse has an emission rate of 0.005 grains per dry standard cubic feet (gr/dscf) for both total particulate matter (PM) and particulate matter smaller than 10 microns (PM_{10}). As a result of the very low particulate emissions, there are virtually no visible emissions from the baghouse under normal operations. The new baghouse emission rate meets current industry control standards for best available control technology for planer shavings cyclone emissions.

4.6 Process Weight Rule

Table 4.2 below demonstrates compliance with the existing process weight rule and the proposed rule:

Table 4.2 Process Weight Rule Compliance

Material	Process Rate tons per year	Estimated Emission Rate (tpy)	Allowable Emission Rate (tpy)	In Compliance with Process Weight Rule
Shavings	34,000	9.39	17.0	Yes (State-only standard, IDAPA 58.01.01.710.08)
Shavings	34,000	9.39	44.7	Yes (IDAPA 58.01.01.703)

APPENDIX A: Permit Application Forms

STATE OF IDAHO
DEPARTMENT OF ENVIRONMENTAL QUALITY

APPLICATION TO CONSTRUCT AN AIR POLLUTION EMITTING FACILITY
(IDAPA 58.01.01.200-.225)

SECTION 1: GENERAL INFORMATION

1. COMPANY AND DIVISION NAME Riley Creek Lumber Company			
2. MAILING ADDRESS P.O. Box 220		COUNTY Bonner	NUMBER OF FULL-TIME EMPLOYEES 140
3. CITY Laclede	STATE Idaho	ZIP CODE 83841	TELEPHONE NUMBER (208) 263-7574
4. PERSON TO CONTACT Steve Spletstoser		TITLE Operations Manager	
5. EXACT PLANT LOCATION *(IDENTIFY LOCALITY, AND INCLUDE UTM COORDINATES IF KNOWN)* SW1/4 SE1/4 Section 30, Township 56 North, Range 5 West			
6. GENERAL NATURE OF BUSINESS AND KINDS OF PRODUCTS Sawmill – Dimensional Lumber			

7. REASON FOR APPLICATION

- [ ] permit to construct a new facility
- [x] permit to modify an existing source
  permit number
- [ ] permit to construct a new source at an existing facility
- [ ] change of owner or location
  permit number
  current owner

8. LIST ALL FACILITIES WITHIN THE STATE THAT ARE UNDER YOUR CONTROL OR UNDER COMMON CONTROL AND HAVE EMISSIONS TO THE AIR. IF NONE, SO STATE.

NAME	LOCATION
No other facilities.	

9. ESTIMATED CONSTRUCTION START DATE October 1, 2001	ESTIMATED COMPLETION DATE October 31, 2001

10. NAME AND TITLE OF OWNER OR RESPONSIBLE OFFICIAL
Mark Brinkmeyer, President

11. In accordance with IDAPA 58.01.01.123 (*Rules for the Control of Air Pollution in Idaho*), _____, certify based on information and belief formed after reasonable inquiry, the statements and information in the document are true, accurate, and complete.

SIGNATURE _____ DATE 5/14/01

The following information, at a minimum, must be included in the application package in order for the application to be determined complete:

- *A scaled plot plan clearly showing property boundaries and stack and building locations;*
- *All calculations and assumptions used to estimate emissions;*
- *Manufacturer's guarantees for stated control efficiencies of all control equipment;*
- *A description of potential fugitive emissions;*
- *A narrative description of the facility and the process from feed material in to final product out;*
- *A process flow diagram; and*
- *Any other information required by the DEQ to determine the application complete.*

STATE OF IDAHO

APPLICATION TO CONSTRUCT AN AIR POLLUTION EMITTING FACILITY

SECTION 2: FUEL-BURNING EQUIPMENT *(complete a separate page for each unit)* **NOT APPLICABLE**

1. APPLICANT'S REFERENCE NUMBER			
2. EQUIPMENT MANUFACTURER AND MODEL NUMBER	3. RATED HEAT INPUT CAPACITY	4. BURNER UNIT TYPE (use code)	5. HEAT USAGE % process / % space heating

6. FUEL DATA

	Primary	Secondary
fuel type (use code)		
percent sulfur		
percent ash		
percent nitrogen		
percent carbon		
percent hydrogen		
percent moisture		
heat content		

(percent by weight or volume)

7. FUEL CONSUMPTION

	Primary	Secondary
Maximum amount burned/hour		
Normal amount burned/year		

Fly ash reinjection? ___ yes ___ no ___ n.a.

8. OPERATING SCHEDULE

Hours per day _____

Days per week _____

Weeks per year _____

9. POLLUTION CONTROL EQUIPMENT

	Primary	Secondary
type		
manufacturer		
model number		
% efficiency		

MANUFACTURER GUARANTEED_____ yes _____ no

(Include guarantee)

for wet scrubbers:

water flow _____ gpm

pressure drop_____ inches of water

for baghouse:

air/cloth ratio

pressure drop _____ inches of water

10. STACK OR EXHAUST DATA

Stack ID _____

Height _____ ft

Exit diameter _____ ft

Exit gas volume _____ acfm

Exit gas temperature _____ F

(Include a separate page for each stack if multiple stacks or vents are used)

are used)

11. CRITERIA POLLUTANT ESTIMATED EMISSIONS

Particulates	lb/hr	tons/yr	Nitrogen oxides	lb/hr	tons/yr
Sulfur dioxide	lb/hr	tons/yr	Volatile organic compounds	lb/hr	tons/yr
Carbon monoxide	lb/hr	tons/yr			

(Include calculations and assumptions)

FUEL CODES

1. Natural gas
2. Oil *(specify ASTM grade number)*
3. Wood *(specify chips, bark, shavings sander dust*
4. Coal *(specify bituminous, antracite, lignite)*
5. Other *(specify)*

BURNER CODES

1. Spreader stoker
2. Chain or traveling grate
3. Hand fired
4. Cyclone furnace
5. Wet bottom *(pulverized coal)*
6. Dry bottom *(pulverized coal)*
7. Underfeed stoker
8. Tangentially fired
9. Horizontally fired
10. Other *(specify)*

STATE OF IDAHO

APPLICATION TO CONSTRUCT AN AIR POLLUTION EMITTING FACILITY

SECTION 3: PROCESS AND MANUFACTURING EQUIPMENT *(complete a separate page for each distinct process or manufacturing operation)*

1. APPLICANT'S REFERENCE NUMBER	2. PROCESS OR OPERATION NAME
	Planer Shavings Cyclone

3. MAXIMUM RATED INPUT CAPACITY *(tons/hour)**	4. NORMAL MAXIMUM FEED INPUT		5. NORMAL MAXIMUM PRODUCT OUTPUT	
	tons/hour	tons/year	tons/hour	tons/year

6. PROCESS EQUIPMENT Unchanged

Type _____

Manufacturer _____

Model Number _____

Feed Material _____

7. OPERATING SCHEDULE

Hours per day 24

Days per week 7

Weeks per year 52

8. STACK OR EXHAUST DATA

Will be provided when available

Stack ID _____

Height _____ ft

Exit diameter _____ ft

Exit gas volume _____ acfm

Exit gas temperature _____ F

(Include a separate page for each stack if multiple stacks or vents are used)

10. POLLUTION CONTROL EQUIPMENT

	Primary	Secondary
Type	Baghouse	
Manufacturer	To be determined	
Model Number	To be determined	
% Efficiency	99+%	

MANUFACTURER GUARANTEED _____ Yes _____ no

(Include guarantee) Will be provided when available

For wet scrubbers:

water flow _____ Gpm

pressure drop _____ inches of water

For baghouses:

air/cloth ratio _____

pressure drop _____ inches of water

11. CRITERIA POLLUTANT ESTIMATED EMISSIONS

particulates	2.14	lb/hr	9.39	tons/yr
sulfur dioxide	-----	lb/hr	----	tons/yr
carbon monoxide	-----	lb/hr	----	tons/yr
nitrogen oxides	-----	lb/hr	----	tons/yr
volatile organic compounds	-----	lb/hr	----	tons/yr

(Include calculations and assumptions) see Appendix B

9. TOXIC AIR POLLUTANT ESTIMATED EMISSIONS

(Include calculations and assumptions)

Pollutant	Uncontrolled Emissions		Controlled Emissions	
None	lb/hr	tons/yr	lb/hr	tons/yr
	lb/hr	tons/yr	lb/hr	tons/yr
	lb/hr	tons/yr	lb/hr	tons/yr
	lb/hr	tons/yr	lb/hr	tons/yr
	lb/hr	tons/yr	lb/hr	tons/yr
	lb/hr	tons/yr	lb/hr	tons/yr
	lb/hr	tons/yr	lb/hr	tons/yr
	lb/hr	tons/yr	lb/hr	tons/yr
	lb/hr	tons/yr	lb/hr	tons/yr

**If units other than tons, please specify.*

APPENDIX B: Actual and Potential Emissions Calculations

PLANER SHAVINGS CYCLONE

38500	scf/min	Rated Flow
4,205	Actual Hours of Operation (1999 and 2000 average)	

TSP :

Emission Factor:	0.03	gr/dscf	Idaho Emission Factor
Emissions:	20.81	tpy	
	237.60	lbs/day	
	9.90	lb/hr	

PM10 :

Emission Factor:	0.015	gr/dscf	Idaho Emission Factor
Emissions:	10.41	tpy	
	118.80	lbs/day	
	4.95	lb/hr	

PLANER SHAVINGS CYCLONE BAGHOUSE

50,000	dscf/min	
8,760	Hours of Operation POTENTIAL	

TSP :

Emission Factor:	0.005	gr/dscf	Manufacturer's Guarantee
Emissions:	9.39	tons/year	
	51.43	lbs/day	
	2.14	lb/hr	

PM10 :

Emission Factor:	0.005	gr/dscf	Manufacturer's Guarantee
Emissions:	9.39	tons/year	
	51.43	lbs/day	
	2.14	lb/hr	

APPENDIX B

Perry Smith (ABCO) Boiler
Post-Modification Ambient Assessment

Riley Creek Lumber Company
Laclede, Idaho

P000106

June 2001

Appendix D

06/06/01
15:43:19

```
 ***  SCREEN3 MODEL RUN  ***
 *** VERSION DATED 96043 ***

000106 - Perry Smith (ABCO) Boiler

SIMPLE TERRAIN INPUTS:
   SOURCE TYPE            =        POINT
   EMISSION RATE (G/S)    =      .126000
   STACK HEIGHT (M)       =      14.6304
   STK INSIDE DIAM (M)    =       1.2192
   STK EXIT VELOCITY (M/S)=      18.5957
   STK GAS EXIT TEMP (K)  =     533.1500
   AMBIENT AIR TEMP (K)   =     293.1500
   RECEPTOR HEIGHT (M)    =        .0000
   URBAN/RURAL OPTION     =        RURAL
   BUILDING HEIGHT (M)    =        .0000
   MIN HORIZ BLDG DIM (M) =        .0000
   MAX HORIZ BLDG DIM (M) =        .0000

THE REGULATORY (DEFAULT) MIXING HEIGHT OPTION WAS SELECTED.
THE REGULATORY (DEFAULT) ANEMOMETER HEIGHT OF 10.0 METERS WAS ENTERED.

BUOY. FLUX =   30.504 M**4/S**3;  MOM. FLUX =   70.657 M**4/S**2.

*** FULL METEOROLOGY ***

**********************************
*** SCREEN AUTOMATED DISTANCES ***
**********************************

*** TERRAIN HEIGHT OF    0. M ABOVE STACK BASE USED FOR FOLLOWING DISTANCES ***
```

DIST (M)	CONC (UG/M**3)	STAB	U10M (M/S)	USTK (M/S)	MIX HT (M)	PLUME HT (M)	SIGMA Y (M)	SIGMA Z (M)	DWASH
10.	.0000	1	1.0	1.0	320.0	285.42	7.56	6.95	NO
100.	.1514E-01	5	1.0	1.1	10000.0	103.48	26.11	25.63	NO
200.	.2161	3	10.0	10.4	3200.0	41.40	24.08	14.80	NO
300.	.7806	3	10.0	10.4	3200.0	41.40	34.84	21.24	NO
400.	1.005	4	20.0	21.2	6400.0	26.25	29.68	15.70	NO
500.	1.040	4	20.0	21.2	6400.0	26.25	36.34	18.68	NO
600.	.9760	4	20.0	21.2	6400.0	26.25	42.88	21.54	NO
700.	.9212	4	15.0	15.9	4800.0	31.34	49.44	24.55	NO
800.	.8573	4	15.0	15.9	4800.0	31.34	55.80	27.25	NO
900.	.8089	4	10.0	10.6	3200.0	40.90	62.34	30.41	NO
1000.	.7766	4	10.0	10.6	3200.0	40.90	68.54	32.96	NO

MAXIMUM 1-HR CONCENTRATION AT OR BEYOND 10. M:

471.	1.044	4	20.0	21.2	6400.0	26.25	34.49	17.86	NO

DWASH= MEANS NO CALC MADE (CONC = 0.0)
DWASH=NO MEANS NO BUILDING DOWNWASH USED
DWASH=HS MEANS HUBER-SNYDER DOWNWASH USED
DWASH=SS MEANS SCHULMAN-SCIRE DOWNWASH USED
DWASH=NA MEANS DOWNWASH NOT APPLICABLE, X<3*LB

*** INVERSION BREAK-UP FUMIGATION CALC. ***
CONC (UG/M**3) = 1.233
DIST TO MAX (M) = 3577.13

****
*** SUMMARY OF SCREEN MODEL RESULTS ***
****

CALCULATION PROCEDURE	MAX CONC (UG/M**3)	DIST TO MAX (M)	TERRAIN HT (M)
SIMPLE TERRAIN	1.044	471.	0.
INV BREAKUP FUMI	1.233	3577.	--

000106 Riley & Lumber Co. June 2007 (Appendix B)

→ Boiler #1 Ambient Assessment (Post-Modification)

→ SCREEN3 MAX. 1-hr predicted impact = 1.044 μg/m³ @ 1 lb/hr.

PM/PM-10

2.1 lb/hr)(1.044 μg/m³/lb·hr)(0.4) = 9.23 μg/m³ 24-hr Average

(9.23 + 86) μg/m³ = 95.23 μg/m³ < 150 μg/m³ NAAQS

2.1 lb/hr)(1.044 μg/m³/lb·hr)(0.08) = 1.85 μg/m³ Annual Average

(1.85 + 32.7) μg/m³ = 34.5 μg/m³ < 50 μg/m³ NAAQS

O

6.3 lb/hr)(1.044 μg/m³/lb·hr) = 48.3 μg/m³ 1-hr Average

(48.3 + 11450) μg/m³ = 11498 μg/m³ < 40000 μg/m³ NAAQS

6.3 lb/hr)(1.044 μg/m³/lb·hr)(0.7) = 33.8 μg/m³ 8-hr Average

(33.8 + 515) μg/m³ = 548.8 μg/m³ < 10,000 μg/m³ NAAQS

NOx

.5 lb/hr)(1.044 μg/m³/lb·hr)(0.08) = 0.21 μg/m³ Annual Average

(0.21 + 40) μg/m³ = 40.21 μg/m³ < 100 μg/m³ NAAQS

SO2

.6 lb/hr)(1.044 μg/m³/lb·hr)(0.9) = 0.56 μg/m³ + 543 μg/m³ = 543.56 μg/m³

→ 3-hr Average 543.56 μg/m³ < 1300 μg/m³ NAAQS

.6 lb/hr)(1.044 μg/m³/lb·hr)(0.4) = 0.25 μg/m³ + 144 μg/m³ = 144.25 μg/m³ < 365 μg/m³ 24-hr Average

.6 lb/hr)(1.044 μg/m³/lb·hr)(0.08) = 0.05 μg/m³ + 23.5 μg/m³ = 23.55 μg/m³ < 80 μg/m³ Annual Average

OC as O3

.4 lb/hr)(1.044 μg/m³/lb·hr) = 5.64 μg/m³ + 78 μg/m³ = 83.64 μg/m³ < 235 μg/m³

1-hr Average

APPENDIX C

AIRS Information

Riley Creek Lumber Company
Laclede, Idaho

P000106

June 2001

STATE PRIVATE AND SENSITIVE AND DRAFT SIP DATA INCLUDED

PLANT: 00027 - RILEY CREEK LUMBER
STATE: ID/16 CITY: - LA CLEDE
COUNTY: 017 - BONNER AQCR: 063

GOV'T FACILITY CODE: 0 - ALL OTHER FACILITIES NOT OWNED OR OPER.
AIR-PROGRAM CODE(S): V 0 AFS PLANT ID:
OPERATING STATUS : O - OPERATING

PLANT NAME: RILEY CREEK LUMBER
ADDRESS : RILEY CR RD S HWY 2
CITY,STATE: LA CLEDE,ID 83841

DUNN & BRADSTREET: 046631578
EPA ID NUMBER : IDD046631578

STANDARD INDUSTRIAL CLASSIFICATIONS:
2421 - SAWMILLS & PLANING MILLS GENERAL
-
-

LAST PLANT UPDATE : 01/02/09
REGIONAL PLANNING :
LOCAL CONTROL REGN:
INSPECTOR :
MONITORING INFORMATION:
SOURCE: AMBIENT:

MAILING ADDRESS:
NAME : RILEY CREEK LUMBER
ADDRESS : PO BOX 220
CITY,STATE: LACLEDE,ID 83841

	STATE	EPA
COMPLIANCE	1 - IN VIOLATION - NO SCHEDUL	1 - IN VIOLATION - NO SCHEDUL
CLASSIFICATION	A	A
LAST INSPECT.	00/12/12 TYPE: 18	98/07/17 TYPE: 16

OPERATING STATUS: O - OPERATING GOVT FAC.: 0 - ALL OTHER FACILITIES NOT PRIORITY : -

HPV TRACKING

POS	HPV	DISCRIPTION	EFFECTIVE DATE	ACTION	DATE MODIFIED	USER	SOURCE
1	T	ADDRESSED-STATE/LOCAL HAS LEAD ENFORCEMENT	2000/06/08	077	2001/01/25	JH1	S
2							
3							
4							
5							
6							
7							
8							
9							
10							
11							
12							

PLANT T&A CALCULATIONS: DAY 60: 00/08/07 DAY 150: 00/11/05 DAY 270: 01/03/05 DAY 300: 01/04/04

STATE PRIVATE AND SENSITIVE AND DRAFT SIP DATA INCLUDED

PLANT: 00027 - RILEY CREEK LUMBER
STATE: ID/16 CITY: - LA CLEDE
COUNTY: 017 - BONNER AQCR: 063

GOV'T FACILITY CODE: 0 - ALL OTHER FACILITIES NOT OWNED OR OPER.
AIR-PROGRAM CODE(S): V 0 AFS PLANT ID:
OPERATING STATUS : O - OPERATING

STATE REGISTRATION: #0240-0027
PLANT DESCRIPTION: SAW & PLANER MILL

CAPACITY: 0 CEMSS INFO (Y/N):
COMPLIANCE CONTACT : STEVE SPLETSTOSER , (208) 263-7574

PLANT COMMENT:

INDIRECT SOURCE #	COMMENT NO.	COMMENT
	001 C	HISTORICAL INFO: FORMERLY BRAND S LUMBER
	002 C	R/A JUDITH A. KERNS, HIGHWAY 200, BOX 35, LACLEDE 83841
	003 C	COMPANY CLOSED 11/85; COMPANY REOPENED 12/85
	004 C	ACTUAL OPERATING RATE: 92 MILLION BD.FT. PER YEAR
	005 C	7/21/97 EXEMPTION ISSUED FOR INSTALLATION OF 2 LUMBER DRYING KILNS

AIR PROGRAM CODES:
V - TITLE V PE O - OPERATING

INSPECTIONS:
EVEN YEAR : STRATEGY: FREQUENCY:
ODD YEAR : STRATEGY: FREQUENCY:
REPEAT VIOLATION FLAG/DATE:
TURNOVER COMPLIANCE FLAG: 0
REPORTING TO REGION: -
STAFF: CDA - COEUR D'ALENE

	STATE	EPA
COMPLIANCE	1 - IN VIOLATION - NO SCHEDUL	-
CLASSIFICATION	A	

RDE1: RDE2: RDE3: RDE4: RDE5: RDE6:
RDE7: RDE9: RDE10: RDE11: RDE12: RDE15:
STATE IMPLEMENTATION PLAN: -

AIR PROGRAM POLLUTANTS:

FACIL -

	STATE	EPA
COMPLIANCE	1 - IN VIOLATION - NO SCHEDUL	-
CLASSIFICATION	A	
ATTAIN/NONATTN	-	-

LOADING: -
RDE14 :
TOXICITY LEVEL:
STATE REGULATION NUMBER:

AIR PROGRAM CODES:
0 - SIP O - OPERATING

INSPECTIONS:

STATE EPA

STATE PRIVATE AND SENSITIVE AND DRAFT SIP DATA INCLUDED

PLANT: 00027 - RILEY CREEK LUMBER
STATE: ID/16 CITY: - LA CLEDE
COUNTY: 017 - BONNER AQCR: 063

GOV'T FACILITY CODE: 0 - ALL OTHER FACILITIES NOT OWNED OR OPER.
AIR-PROGRAM CODE(S): V 0 AFS PLANT ID:
OPERATING STATUS : O - OPERATING

EVEN YEAR : 92 STRATEGY: C FREQUENCY: 01
ODD YEAR : 97 STRATEGY: C FREQUENCY: 01
REPEAT VIOLATION FLAG/DATE: 0384/9910
TURNOVER COMPLIANCE FLAG: 5
REPORTING TO REGION: -
STAFF: CDA - COEUR D'ALENE

COMPLIANCE : 1 - IN VIOLATION - NO SCHEDUL : 1 - IN VIOLATION - NO SCHEDUL
CLASSIFICATION: A : A

RDE1: R RDE2: RDE3: RDE4: RDE5: RDE6:
RDE7: RDE9: RDE10: RDE11: RDE12: RDE15: 0
STATE IMPLEMENTATION PLAN: 0 - SCHEDULE STATUS UNKNOWN

AIR PROGRAM POLLUTANTS:

CO - CARBON MONOXIDE

LOADING: -
RDE14 :
TOXICITY LEVEL:
STATE REGULATION NUMBER:

	STATE	EPA
COMPLIANCE	3 - IN COMPLIANCE - INSPECTIO	-
CLASSIFICATION		
ATTAIN/NONATTN	-	-

NO2 - NITROGEN DIOXIDE

LOADING: -
RDE14 :
TOXICITY LEVEL:
STATE REGULATION NUMBER:

	STATE	EPA
COMPLIANCE	3 - IN COMPLIANCE - INSPECTIO	-
CLASSIFICATION		
ATTAIN/NONATTN	-	-

PT - SUSPENDED PARTICULATE (TS

LOADING: -
RDE14 :
TOXICITY LEVEL:
STATE REGULATION NUMBER:

	STATE	EPA
COMPLIANCE	2 - IN COMPLIANCE - SOURCE TE	1 - IN VIOLATION - NO SCHEDUL
CLASSIFICATION	A	A
ATTAIN/NONATTN	A - ATTAINMENT AREA FOR A GIV	A - ATTAINMENT AREA FOR A GIV

SO2 - SULFUR DIOXIDE

LOADING: -
RDE14 :
TOXICITY LEVEL:
STATE REGULATION NUMBER:

	STATE	EPA
COMPLIANCE	3 - IN COMPLIANCE - INSPECTIO	-
CLASSIFICATION	A	
ATTAIN/NONATTN	A - ATTAINMENT AREA FOR A GIV	-

VOC - VOLATILE ORG COMPNDS

LOADING: -

	STATE	EPA
COMPLIANCE	3 - IN COMPLIANCE - INSPECTIO	-
CLASSIFICATION	A	

STATE PRIVATE AND SENSITIVE AND DRAFT SIP DATA INCLUDED

PLANT: 00027 - RILEY CREEK LUMBER
STATE: ID/16 CITY: - LA CLEDE
COUNTY: 017 - BONNER AQCR: 063

GOV'T FACILITY CODE: 0 - ALL OTHER FACILITIES NOT OWNED OR OPER.
AIR-PROGRAM CODE(S): V 0 AFS PLANT ID:
OPERATING STATUS : O - OPERATING

RDE14 :
TOXICITY LEVEL:
STATE REGULATION NUMBER:

ATTAIN/NONATTN: A - ATTAINMENT AREA FOR A GIV : -

PB - LEAD (TSP)

LOADING: -
RDE14 :
TOXICITY LEVEL:
STATE REGULATION NUMBER:

	STATE	EPA
COMPLIANCE	3 - IN COMPLIANCE - INSPECTIO	-
CLASSIFICATION:		
ATTAIN/NONATTN:	-	-

ADMIN -

LOADING: -
RDE14 :
TOXICITY LEVEL:
STATE REGULATION NUMBER:

	STATE	EPA
COMPLIANCE	1 - IN VIOLATION - NO SCHEDUL	-
CLASSIFICATION:		
ATTAIN/NONATTN:	-	-

ACT. NO.	INDIR. NO.	AIR PROGRM	TYPE/DESCRIPTION	DATE SCHEDULD	DATE ACHIEVED	ACT. CAT.	STAFF	RESULTS	PENALTY	RD8	PLLT/CASN	RDE 16
001	0	17	ST COMP INSPEC	78/09/30	77/10/06			15 OPACITY VIOLATI	0			

COMMENT NO.	COMMENT
001	OPACITY OBSERVED AT 40%

002	0	17	ST COMP INSPEC	79/09/30	79/05/22			19 IN COMPLIANCE	0			
003	0	17	ST COMP INSPEC	80/09/30	80/04/24			01 ACTION ACHIEVED	0			

COMMENT NO.	COMMENT
001	NOT OPERATING DURING INSPECTION

004	0	16	EPA INSPECTION	82/09/30	82/02/24		E06	19 IN COMPLIANCE	0			
005	0	17	ST COMP INSPEC	83/09/30	83/06/29		E30	19 IN COMPLIANCE	0			

STATE PRIVATE AND SENSITIVE AND DRAFT SIP DATA INCLUDED

PLANT: 00027 - RILEY CREEK LUMBER
STATE: ID/16 CITY: - LA CLEDE
COUNTY: 017 - BONNER AQCR: 063

GOV'T FACILITY CODE: 0 - ALL OTHER FACILITIES NOT OWNED OR OPER.
AIR-PROGRAM CODE(S): V 0 AFS PLANT ID:
OPERATING STATUS : O - OPERATING

ACT. NO.	INDIR. NO.	AIR PROGRM	TYPE/DESCRIPTION	DATE SCHEDULD	DATE ACHIEVED	ACT. CAT.	STAFF	RESULTS	PENALTY	RD8	PLLT/CASN	RDE 16
006		0	17 ST COMP INSPEC	84/09/30	84/06/21		E34	19 IN COMPLIANCE	0			
007		0	I2 ID PER OP ISS	84/03/01	84/03/01			01 ACTION ACHIEVED	0			
009		0	75 ID - STATE WARN	84/08/28	84/08/28			08 ISSUED	0			

COMMENT NO.	COMMENT
001	PERMIT REQUIRES S.T. BY 6/30/84 & THIS WAS NOT ACHIEVED.

010		0	85 SPEC ACT DUE/C	84/09/30	/ /			02 NOT ACHIEVED	0			

COMMENT NO.	COMMENT
001	S.T. REQUIRED BY THIS DATE.
002	S.T. RESCHEDULED.

011		0	85 SPEC ACT DUE/C	84/11/09	84/11/21			01 ACTION ACHIEVED	0			

COMMENT NO.	COMMENT
001	S.T. REQUIRED BY THIS DATE.

012		0	17 ST COMP INSPEC	85/06/30	84/11/21		E34	19 IN COMPLIANCE	0			
013		0	84 ID - NOV W/PEN	85/02/08	85/02/08		E34	08 ISSUED	0			

COMMENT NO.	COMMENT
001	NOV ISSUED DUE TO FAILURE OF STACK TEST ON 11/21/84.

014		0	85 SPEC ACT DUE/C	85/02/26	85/02/12			01 ACTION ACHIEVED	0			

STATE PRIVATE AND SENSITIVE AND DRAFT SIP DATA INCLUDED

PLANT: 00027 - RILEY CREEK LUMBER
STATE: ID/16 CITY: - LA CLEDE
COUNTY: 017 - BONNER AQCR: 063

GOV'T FACILITY CODE: 0 - ALL OTHER FACILITIES NOT OWNED OR OPER.
AIR-PROGRAM CODE(S): V 0 AFS PLANT ID:
OPERATING STATUS : O - OPERATING

ACT. NO.	INDIR. NO.	AIR PROGRM	TYPE/DESCRIPTION	DATE SCHEDULD	DATE ACHIEVED	ACT. CAT.	STAFF	RESULTS	PENALTY	RD8	PLLT/CASN	RDE 16
	COMMENT NO.	COMMENT										
	001	RESPONSE TO NOV DUE.										
	002	STACK TEST RESCHEDULED BY 5/30/85										
015	0	17	ST COMP INSPEC	86/06/30	86/06/17		E34	19 IN COMPLIANCE	0			
016	0	84	ID - NOV W/PEN	85/08/12	85/08/12			08 ISSUED	0			
	COMMENT NO.	COMMENT										
	001	NOV ISSUED DUE TO FAILURE TO CONDUCT S.T. SCHEDULED FOR										
	002	5/30/85.										
017	0	85	SPEC ACT DUE/C	85/08/22	85/08/22			01 ACTION ACHIEVED	0			
	COMMENT NO.	COMMENT										
	001	RESPONSE TO NOV DUE.										
018	0	17	ST COMP INSPEC	87/06/30	87/05/13		E34	19 IN COMPLIANCE	0			
019	0	16	EPA INSPECTION	86/06/17	86/06/17		E43	19 IN COMPLIANCE	0			
020	0	17	ST COMP INSPEC	88/09/30	88/03/01		E34	18 OUT OF COMPLIAN	0			
	COMMENT NO.	COMMENT										
	001	OPACITY VIOLATION ON BOILER.										
021	0	61	ID - CONSENT OR	88/11/10	88/11/10			08 ISSUED	0			

STATE PRIVATE AND SENSITIVE AND DRAFT SIP DATA INCLUDED

PLANT: 00027 - RILEY CREEK LUMBER
STATE: ID/16 CITY: - LA CLEDE
COUNTY: 017 - BONNER AQCR: 063

GOV'T FACILITY CODE: 0 - ALL OTHER FACILITIES NOT OWNED OR OPER.
AIR-PROGRAM CODE(S): V 0 AFS PLANT ID:
OPERATING STATUS : O - OPERATING

ACT. NO.	INDIR. NO.	AIR PROGRM	TYPE/DESCRIPTION	DATE SCHEDULD	DATE ACHIEVED	ACT. CAT.	STAFF	RESULTS	PENALTY	RD8	PLLT/CASN	RDE 16
	COMMENT NO.	COMMENT										
	001	VIOLATIONS ON BOILER.										
022	0		72 ID - ST PENALTY	88/12/02	88/11/23			01 ACTION ACHIEVED	340			
	COMMENT NO.	COMMENT										
	001	$340.00 PAYMENT FROM CO. IN SETTLEMENT OF OPACITY VIOLA-										
	002	TIONS ALLEGED IN 5/25/88 NOV.										
023	0		72 ID - ST PENALTY	89/01/21	89/01/09			01 ACTION ACHIEVED	250			
	COMMENT NO.	COMMENT										
	001	$250.00 STIPULATED PENALTY FOR LATE SUBMITTAL OF PROGRESS										
	002	REPORT PER 11/10/88 C.O.										
024	0		05 FINAL COMPL.	89/01/12	89/01/12			01 ACTION ACHIEVED	0			
025	0		17 ST COMP INSPEC	89/09/30	89/06/22		E34	19 IN COMPLIANCE	0			
026	0		17 ST COMP INSPEC	90/09/30	90/03/27		E34	18 OUT OF COMPLIAN	0			
027	0		I2 ID PER OP ISS	89/01/13	89/01/13			08 ISSUED	0			
028	0		I4 ID PERMT DUE	94/01/13	/ /				0			
029	0		84 ID - NOV W/PEN	88/05/25	88/05/25			08 ISSUED	0			
	COMMENT NO.	COMMENT										

STATE PRIVATE AND SENSITIVE AND DRAFT SIP DATA INCLUDED

PLANT: 00027 - RILEY CREEK LUMBER
STATE: ID/16 CITY: - LA CLEDE
COUNTY: 017 - BONNER AQCR: 063

GOV'T FACILITY CODE: 0 - ALL OTHER FACILITIES NOT OWNED OR OPER.
AIR-PROGRAM CODE(S): V 0 AFS PLANT ID:
OPERATING STATUS : O - OPERATING

ACT. NO.	INDIR. NO.	AIR PROGRM	TYPE/DESCRIPTION	DATE SCHEDULD	DATE ACHIEVED	ACT. CAT.	STAFF	RESULTS	PENALTY	RD8	PLLT/CASN	RDE 16
	COMMENT NO.		COMMENT									
	001		V.E. VIOLATIONS									
030	0		17 ST COMP INSPEC	91/09/30	91/06/10		E34	19 IN COMPLIANCE	0			
031	0		17 ST COMP INSPEC	92/09/30	92/06/23		E34	19 IN COMPLIANCE	0			
	COMMENT NO.		COMMENT									
	001		ALSO CONDUCTED S.T. DURING INSPECTION									
032	0		L5 EPA NOV	/ /	92/01/17			08 ISSUED	0			
	COMMENT NO.		COMMENT									
	001		NOV ISSUED FOR VISIBLE EMISSIONS VIOLATIONS									
033	0		L9 EPA 114 REQUEST	/ /	92/02/27			08 ISSUED	0			
034	0		17 ST COMP INSPEC	93/09/30	93/03/31		E34	19 IN COMPLIANCE	0			
	COMMENT NO.		COMMENT									
	001		AREAS OF CONCERN: BOILER VE'S & MILL YARD F.D.									
035	0		7F ADM COMPL FILED	/ /	92/12/02			08 ISSUED	25000			
036	0		75 ID - STATE WARN	94/09/07	94/09/07			08 ISSUED	0			
	COMMENT NO.		COMMENT									

STATE PRIVATE AND SENSITIVE AND DRAFT SIP DATA INCLUDED

PLANT: 00027 - RILEY CREEK LUMBER
STATE: ID/16 CITY: - LA CLEDE
COUNTY: 017 - BONNER AQCR: 063

GOV'T FACILITY CODE: 0 - ALL OTHER FACILITIES NOT OWNED OR OPER.
AIR-PROGRAM CODE(S): V 0 AFS PLANT ID:
OPERATING STATUS : O - OPERATING

ACT. NO.	INDIR. NO.	AIR PROGRM	TYPE/DESCRIPTION	DATE SCHEDULD	DATE ACHIEVED	ACT. CAT.	STAFF	RESULTS	PENALTY	RD8	PLLT/CASN	RDE 16
	COMMENT NO.		COMMENT									
	001		94 FEES OVERDUE									
037	0		85 SPEC ACT DUE/C	94/08/01	99/01/01			07 INCOMPLETE	0			
	COMMENT NO.		COMMENT									
	001		PAID 94 FEES ON 9/14/94 STILL OWE FOR 93 FEES									
038	0		12 FED CON AGR SIG	/ /	93/09/27			08 ISSUED	20000			
039	0		75 ID - STATE WARN	94/11/21	94/11/21			08 ISSUED	0	F		
	COMMENT NO.		COMMENT									
	001		FAILURE FOR CO. TO RESPOND TO REQUEST FOR ADDITIONAL REGIS- TRATION FEE INFO									
040	0		85 SPEC ACT DUE/C	94/11/21	99/01/01			01 ACTION ACHIEVED	0			
	COMMENT NO.		COMMENT									
	001		RESPONSE TO 11/21/94 WARNING LETTER-ADDITIONAL FEE INFO RE- QUESTED FEES DUE/RECEIVED									
041	0		17 ST COMP INSPEC	95/09/30	95/02/24		E34	19 IN COMPLIANCE	0	C		
	COMMENT NO.		COMMENT									

STATE PRIVATE AND SENSITIVE AND DRAFT SIP DATA INCLUDED

PLANT: 00027 - RILEY CREEK LUMBER
STATE: ID/16 CITY: - LA CLEDE
COUNTY: 017 - BONNER AQCR: 063

GOV'T FACILITY CODE: 0 - ALL OTHER FACILITIES NOT OWNED OR OPER.
AIR-PROGRAM CODE(S): V 0 AFS PLANT ID:
OPERATING STATUS : O - OPERATING

ACT. NO.	INDIR. NO.	AIR PROGRM	TYPE/DESCRIPTION	DATE SCHEDULD	DATE ACHIEVED	ACT. CAT.	STAFF	RESULTS	PENALTY	RD8	PLLT/CASN	RDE 16
	COMMENT NO.	COMMENT										
	001	CO. SIGNIFICANTLY MODIFIED METHOD FOR HANDLING PLANER SHAVINGS; SHAVINGS BINS MOVED; & 3 CYCLONES HAVE BEEN REPLACED BY 1 LARGE CYCLONE										
042	0	75	ID - STATE WARN	95/05/31	95/05/31		08	ISSUED	0	WL		
	COMMENT NO.	COMMENT										
	001	AREAS OF CONCERN DURING 2/24/95 INSPECTION-MODIF TO SHAVINGS HANDLING SYSTEM W/O PTC										
043	0	I1	ID PTC ISSUED	96/12/31	96/12/31		08	ISSUED	0			
	COMMENT NO.	COMMENT										
	001	KIPPER & SONS WOOD-FIRED BOILER										
044	0	03	START CONST.	98/12/31	/ /				0			
045	0	04	END CONSTR.	98/01/20	98/01/20		99	PENDING	0			
	COMMENT NO.	COMMENT										
	001	PER 1/16/98 CO. LETTER-SHOULD BE NO LATER THAN 1/20/98										
046	0	RI	NEW SRCE START	98/01/18	98/01/18				0			
	COMMENT NO.	COMMENT										

STATE PRIVATE AND SENSITIVE AND DRAFT SIP DATA INCLUDED

PLANT: 00027 - RILEY CREEK LUMBER
STATE: ID/16 CITY: - LA CLEDE
COUNTY: 017 - BONNER AQCR: 063

GOV'T FACILITY CODE: 0 - ALL OTHER FACILITIES NOT OWNED OR OPER.
AIR-PROGRAM CODE(S): V 0 AFS PLANT ID:
OPERATING STATUS : O - OPERATING

ACT. NO.	INDIR. NO.	AIR PROGRM	TYPE/DESCRIPTION	DATE SCHEDULD	DATE ACHIEVED	ACT. CAT.	STAFF	RESULTS	PENALTY	RD8	PLLT/CASN	RDE 16

COMMENT NO.	COMMENT
001	PER 1/16/98 CO. LETTER-ENCOUNTERING NUMEROUS PROBLEMS AF-FECTING TIMELINE. CO. WILL NOTIFY WHEN ACHIEVING MAX PROD.
002	PER 3/15/99 CO. LETTER-CONSTRUCTION DELAYS. RAN BOTH BOILERS AT MAX LOAD 7/1/98. STACKS SEPARATED TO 2 STACKS RATHER THAN 1. CONDUCTED S.T. 2/10-11/99 (#2 BOILER). WILL RETEST AFTER MORE CHANGES ARE MADE.
003	PER 5/27/99 CO. LETTER-REBUILDING PREHEATER. WILL GO ON LINE WHEN PREHEATER IS DONE.

047	0	18	SOURCE TST CON	99/07/08	99/07/08			19	IN COMPLIANCE	0		

COMMENT NO.	COMMENT
001	KIPPER & SONS WOOD-FIRED BOILER
002	PER 6/25/99 DEQ LETTER-TESTING SCHEDULED FOR WEEK OF 7/6/99
003	PER 11/4/99 DEQ LETTER-MAX ALLOWABLE OPERATING RATE-32,700 LB/HR OF STEAM PROD.

048	0	17	ST COMP INSPEC	97/09/30	97/07/30		E34	19	IN COMPLIANCE	0	C	
049	0	17	ST COMP INSPEC	98/09/30	98/06/04		E34	19	IN COMPLIANCE	0	C	

COMMENT NO.	COMMENT
001	ANNUAL INSPECTION & FOLLOW UP TO CITIZEN COMPLAINT

050	0	17	ST COMP INSPEC	98/09/30	98/08/05		E34	19	IN COMPLIANCE	0		

COMMENT NO.	COMMENT

STATE PRIVATE AND SENSITIVE AND DRAFT SIP DATA INCLUDED

PLANT: 00027 - RILEY CREEK LUMBER
STATE: ID/16 CITY: - LA CLEDE
COUNTY: 017 - BONNER AQCR: 063

GOV'T FACILITY CODE: 0 - ALL OTHER FACILITIES NOT OWNED OR OPER.
AIR-PROGRAM CODE(S): V 0 AFS PLANT ID:
OPERATING STATUS : O - OPERATING

ACT. NO.	INDIR. NO.	AIR PROGRM	TYPE/DESCRIPTION	DATE SCHEDULD	DATE ACHIEVED	ACT. CAT.	STAFF	RESULTS	PENALTY	RD8	PLLT/CASN	RDE 16
	COMMENT NO.	COMMENT										
	001	COMPLAINT INVESTIGATION CO. HAS PURCHASED A NEW ESP & PLANS TO UTILIZE AN ESP FOR EACH BOILER & SEPARATE THE BOILER STACKS										
051	0	16	EPA INSPECTION	/ /	98/07/17		E72	19 IN COMPLIANCE	0			
052	0	87	STTE WARN LETT	99/06/25	99/06/25			08 ISSUED	0	WL		
	COMMENT NO.	COMMENT										
	001	TO RESOLVE ISSUES RE: PROTOCOL FOR PERF TEST ON KIPPER & SONS BOILER SCHED FOR WEEK OF 7/6/99										
053	0	85	SPEC ACT DUE/C	99/07/10	/ /				0	RL		
	COMMENT NO.	COMMENT										
	001	RESPONSE DUE TO 6/25/99 WARNING LETTER										
054	0	17	ST COMP INSPEC	99/09/30	99/09/08		TSO	18 OUT OF COMPLIAN	0	C	P-YES	/C991105/SO-991108
	COMMENT NO.	COMMENT										
	001	APPARENT PERMIT VIOL (CONVEYORS/STORAGE BINS NOT ENCLOSED, TESTING NOT DONE W/IN 180 DAYS; NEW PLANER CHIPPER CYCLONE- NO EXEMPTION CRITERIA AVAILABLE)										
055	0	87	STTE WARN LETT	99/11/05	99/11/05			08 ISSUED	0	WL		
	COMMENT NO.	COMMENT										

STATE PRIVATE AND SENSITIVE AND DRAFT SIP DATA INCLUDED

PLANT: 00027 - RILEY CREEK LUMBER
STATE: ID/16 CITY: - LA CLEDE
COUNTY: 017 - BONNER AQCR: 063

GOV'T FACILITY CODE: 0 - ALL OTHER FACILITIES NOT OWNED OR OPER.
AIR-PROGRAM CODE(S): V 0 AFS PLANT ID:
OPERATING STATUS : O - OPERATING

ACT. NO.	INDIR. NO.	AIR PROGRM	TYPE/DESCRIPTION	DATE SCHEDULD	DATE ACHIEVED	ACT. CAT.	STAFF	RESULTS	PENALTY	RD8	PLLT/CASN	RDE 16
	COMMENT NO.	COMMENT										
	001	NOTIFYING CO. THAT 9/8/99 INSPECTION IN VIOL OF PTC ISSUED 12/31/96 (WOODWASTE HANDLING/PERF TESTING, INSTALLATION OF PLANER CHIPPER CYCLONE)										
057	0	00	INFO ORDER	00/01/24	00/01/24			08 ISSUED	0			
	COMMENT NO.	COMMENT										
	001	REQUESTING DAILY OPER LOGS FOR K&S BOILER (1/12/98-8/1/99), INFO ON PERF TEST-K&S BOILER (CONDUCTED 2/10/99), INFO ON PLANER/CHIPPER CYCLONE & WOODWASTE HANDLING SYSTEM										
058	0	85	SPEC ACT DUE/C	00/02/29	/ /				0	RL		
	COMMENT NO.	COMMENT										
	001	RESPONSE DUE TO 1/24/00 INFO ORDER PER 2/18/00 DEQ LETTER-CO. RESPONSE DATE EXTENDED FROM 2/22/00 TO 2/29/00.										
060	0	17	ST COMP INSPEC	00/09/30	00/04/05		TSC	18 OUT OF COMPLIAN	0	C	P-YES	/C000421/SO-000426
	COMMENT NO.	COMMENT										
	001	PERMIT VIOL (BOILER LOADING RATE, OPERATING PARAMETERS MONITORING)										
061	0	SV	STATE DAY 0	/ /	99/02/17				0			

KEY ACTION(S)	VIOLATING PLLTS	LEAD AGENCY	VIOLATION IDENTIFIER	DAY 60	DAY 150	DAY 270	DAY 300	DAYS ADDR	UNADDR DAYS
061	PT,ADMIN	-	-	99/04/18	99/07/17	99/11/14	99/12/14	477	0

STATE PRIVATE AND SENSITIVE AND DRAFT SIP DATA INCLUDED

PLANT: 00027 - RILEY CREEK LUMBER
STATE: ID/16 CITY: - LA CLEDE
COUNTY: 017 - BONNER AQCR: 063

GOV'T FACILITY CODE: 0 - ALL OTHER FACILITIES NOT OWNED OR OPER.
AIR-PROGRAM CODE(S): V 0 AFS PLANT ID:
OPERATING STATUS : O - OPERATING

ACT. NO.	INDIR. NO.	AIR PROGRM	TYPE/DESCRIPTION	DATE SCHEDULD	DATE ACHIEVED	ACT. CAT.	STAFF	RESULTS	PENALTY	RD8	PLLT/CASN	RDE 16
	COMMENT NO.	COMMENT										
	001	SOURCE TEST VIOLATION										
062	0		VL SV ADDED	/ /	99/02/17				0			
	KEY ACTION(S): 061											
063	0		87 STTE WARN LETT	00/04/21	00/04/21			08 ISSUED	0		WL	
	COMMENT NO.	COMMENT										
	001	APPARENT VIOLATIONS OBSERVED DURING 4/5/00 INSPECTION										
064	0		85 SPEC ACT DUE/C	00/05/11	00/05/05			01 ACTION ACHIEVED	0		RL	
	COMMENT NO.	COMMENT										
	001	RESPONSE DUE TO 4/21/00 WARNING LETTER										
	002	CO. REQUESTING PERMIT CHANGES										
065	0		84 ID - NOV W/PEN	00/06/07	00/06/07			08 ISSUED	0			
	COMMENT NO.	COMMENT										
	001	APPARENT VIOLATIONS OF RULES FOR CONTROL OF AIR POLLUTION & PERMIT VIOLATIONS										
	002	TOTAL PENALTIES ASSESSED - $136,040										
066	0		85 SPEC ACT DUE/C	00/06/27	00/06/15			01 ACTION ACHIEVED	0			
	COMMENT NO.	COMMENT										

STATE PRIVATE AND SENSITIVE AND DRAFT SIP DATA INCLUDED

PLANT: 00027 - RILEY CREEK LUMBER
STATE: ID/16 CITY: - LA CLEDE
COUNTY: 017 - BONNER AQCR: 063

GOV'T FACILITY CODE: 0 - ALL OTHER FACILITIES NOT OWNED OR OPER.
AIR-PROGRAM CODE(S): V 0 AFS PLANT ID:
OPERATING STATUS : O - OPERATING

ACT. NO.	INDIR. NO.	AIR PROGRM	TYPE/DESCRIPTION	DATE SCHEDULD	DATE ACHIEVED	ACT. CAT.	STAFF	RESULTS	PENALTY	RD8	PLLT/CASN	RDE 16
	COMMENT NO.	COMMENT										
	001	RESPONSE DUE TO 6/7/00 NOV COMPLIANCE CONF HELD 6/21/00. CO. RESPONDED 7/17/00.										
067	0		00 TRANSMITTAL LET	00/08/18	00/08/18			08 ISSUED	0	WL		
	COMMENT NO.	COMMENT										
	001	TRANSMITTAL OF DRAFT C.O.										
068	0		85 SPEC ACT DUE/C	00/09/02	00/09/22			01 ACTION ACHIEVED	0	RL		
	COMMENT NO.	COMMENT										
	001	RESPONSE DUE TO 8/18/00 LETTER										
069	0		18 SOURCE TST CON	00/12/12	00/12/12				0			RV
	COMMENT NO.	COMMENT										
	001	TO BE CONDUCTED ON PERRY SMITH BOILER (PT, CO, OPACITY). PER 11/30/00 DEQ-CRO LETTER-PROTOCOL APPROVED										
070	0		23 S.T. OBSERVED	00/12/12	00/12/12			99 PENDING	0			
	COMMENT NO.	COMMENT										
	001	OBSERVED S.T. ON PERRY SMITH (#1) BOILER										

STATE PRIVATE AND SENSITIVE AND DRAFT SIP DATA INCLUDED

PLANT: 00027 - RILEY CREEK LUMBER
STATE: ID/16 CITY: - LA CLEDE
COUNTY: 017 - BONNER AQCR: 063

GOV'T FACILITY CODE: 0 - ALL OTHER FACILITIES NOT OWNED OR OPER.
AIR-PROGRAM CODE(S): V 0 AFS PLANT ID:
OPERATING STATUS : O - OPERATING

ACT. NO.	INDIR. NO.	AIR PROGRM	TYPE/DESCRIPTION	DATE SCHEDULD	DATE ACHIEVED	ACT. CAT.	STAFF	RESULTS	PENALTY	RD8	PLLT/CASN	RDE 16
071		0	SV STATE DAY 0	/ /	98/09/08				0			

KEY ACTION(S)	VIOLATING PLLTS	LEAD AGENCY	VIOLATION IDENTIFIER	DAY 60	DAY 150	DAY 270	DAY 300	DAYS ADDR	UNADDR DAYS
071	PT,ADMIN	-	-	98/11/07	99/02/05	99/06/05	99/07/05	639	0

COMMENT NO.	COMMENT
001	PERMIT VIOLATIONS

072	0	VL SV ADDED	/ /	98/09/08			0		

KEY ACTION(S): 071

073	0	RT SV REPT AS ADDR	/ /	00/06/08			0		

KEY ACTION(S): 071

074	0	SV STATE DAY 0	/ /	00/04/05			0		

KEY ACTION(S)	VIOLATING PLLTS	LEAD AGENCY	VIOLATION IDENTIFIER	DAY 60	DAY 150	DAY 270	DAY 300	DAYS ADDR	UNADDR DAYS
074	PT,ADMIN	-	-	00/06/04	00/09/02	00/12/31	01/01/30	64	0

COMMENT NO.	COMMENT
001	PERMIT VIOLATION

075	0	VL SV ADDED	/ /	00/04/05			0		

KEY ACTION(S): 074

STATE PRIVATE AND SENSITIVE AND DRAFT SIP DATA INCLUDED

PLANT: 00027 - RILEY CREEK LUMBER
STATE: ID/16 CITY: - LA CLEDE
COUNTY: 017 - BONNER AQCR: 063

GOV'T FACILITY CODE: 0 - ALL OTHER FACILITIES NOT OWNED OR OPER.
AIR-PROGRAM CODE(S): V 0 AFS PLANT ID:
OPERATING STATUS : 0 - OPERATING

ACT. NO.	INDIR. NO.	AIR PROGRM	TYPE/DESCRIPTION	DATE SCHEDULD	DATE ACHIEVED	ACT. CAT.	STAFF	RESULTS	PENALTY	RD8	PLLT/CASN	RDE 16
076		0	RT SV REPT AS ADDR	/ /	00/06/08				0			
	KEY ACTION(S): 074											
077		0	RT SV REPT AS ADDR	/ /	00/06/08				0			
	KEY ACTION(S): 061											

STATE PRIVATE AND SENSITIVE AND DRAFT SIP DATA INCLUDED

PLANT: 00027 - RILEY CREEK LUMBER
STATE: ID/16 CITY: - LA CLEDE
COUNTY: 017 - BONNER AQCR: 063

GOV'T FACILITY CODE: 0 - ALL OTHER FACILITIES NOT OWNED OR OPER.
AIR-PROGRAM CODE(S): V 0 AFS PLANT ID:
OPERATING STATUS : O - OPERATING

POINT INFORMATION: / 010 M - LOG DEBARKING

STATE SENSITIVE INDICATOR: N
DESIGN CAPACITY: 0 UNITS: -
CONTINUOUS EMISSIONS (Y/N): N
REGULATED SOURCE CLASS CODE: 30700801
OPERATING RESTRICTIONS:

	STATE	EPA
LAST INSPECT. :	/ / TYPE:	/ / TYPE:
SOOT BLOWING :		
TIMES PER DAY :	0 TIMES PER WEEK: 0	AM OR PM:

AIR PROGRAM: 0 - SIP O - OPERATING
POLLUTANT-CODE: PT

	STATE	EPA
COMPLIANCE STATUS:	3 - IN COMPLIANCE - INSPECTIO	-
STATE-IMPLEMENTATION-PLAN:	-	RDE7: RDE15: 0

POINT INFORMATION: / 020 M - LOG SAWING

STATE SENSITIVE INDICATOR: N
DESIGN CAPACITY: 0 UNITS: -
CONTINUOUS EMISSIONS (Y/N): N
REGULATED SOURCE CLASS CODE: 30700802
OPERATING RESTRICTIONS:

	STATE	EPA
LAST INSPECT. :	/ / TYPE:	/ / TYPE:
SOOT BLOWING :		
TIMES PER DAY :	0 TIMES PER WEEK: 0	AM OR PM:

AIR PROGRAM: 0 - SIP O - OPERATING
POLLUTANT-CODE: PT

	STATE	EPA
COMPLIANCE STATUS:	3 - IN COMPLIANCE - INSPECTIO	-
STATE-IMPLEMENTATION-PLAN:	-	RDE7: RDE15: 0

POINT INFORMATION: / 025 M - OLIVINE BURNER

STATE SENSITIVE INDICATOR: N
DESIGN CAPACITY: 0 UNITS: -
CONTINUOUS EMISSIONS (Y/N): N
REGULATED SOURCE CLASS CODE: 50300105
OPERATING RESTRICTIONS:

	STATE	EPA
LAST INSPECT. :	91/01/04 TYPE: 18	/ / TYPE:
SOOT BLOWING :		
TIMES PER DAY :	0 TIMES PER WEEK: 0	AM OR PM:

STATE PRIVATE AND SENSITIVE AND DRAFT SIP DATA INCLUDED

PLANT: 00027 - RILEY CREEK LUMBER
STATE: ID/16 CITY: - LA CLEDE
COUNTY: 017 - BONNER AQCR: 063

GOV'T FACILITY CODE: 0 - ALL OTHER FACILITIES NOT OWNED OR OPER.
AIR-PROGRAM CODE(S): V 0 AFS PLANT ID:
OPERATING STATUS : O - OPERATING

POINT INFORMATION: / 025 M - OLIVINE BURNER

COMMENT NO.	COMMENT
001 C	PER 7/30/97 INSPECTION OLIVINE BURNER HAS HAD THE BURNERS REMOVED, CURRENTLY BEING USED FOR TOOL STORAGE

AIR PROGRAM: 0 - SIP X - PERMANENTLY CLOSED
POLLUTANT-CODE: PT

---------STATE---------- --------EPA----------
COMPLIANCE STATUS: 9 - IN COMPLIANCE - SHUT DOWN : -
STATE-IMPLEMENTATION-PLAN: - RDE7: RDE15:

ACT. NO.	PLANT	AIR PROGRM	TYPE/DESCRIPTION	DATE SCHEDULD	DATE ACHIEVED	ACT. CAT.	STAFF	RESULTS	PENALTY	RD8	PLLT/CASN	RDE 16
001		0	I1 ID PTC ISSUED	89/01/13	89/01/13			08 ISSUED	0			
002		0	I2 ID PER OP ISS	89/01/13	89/01/13			08 ISSUED	0			
003		0	I4 ID PERMT DUE	94/01/13	/ /				0			
004		0	03 START CONST.	89/02/03	89/02/03			01 ACTION ACHIEVED	0			
005		0	04 END CONSTR.	89/06/22	89/06/22			01 ACTION ACHIEVED	0			
006		0	18 SOURCE TST CON	90/05/13	90/05/24			18 OUT OF COMPLIAN	0			

COMMENT NO.	COMMENT
002	TED TO DEPT. WITHIN 30 DAYS OF TEST
003	120 DAY EXTENSION GRANTED (FROM 1/3/90)
001	STACK TEST SHALL MEASURE PT & CO; RESULTS SHALL BE SUBMIT-
004	S.T. = 366 LBS/HR, ALLOWED 107

007		0	18 SOURCE TST CON	90/07/25	90/07/25			18 OUT OF COMPLIAN	0			

COMMENT NO.	COMMENT

STATE PRIVATE AND SENSITIVE AND DRAFT SIP DATA INCLUDED

PLANT: 00027 - RILEY CREEK LUMBER
STATE: ID/16 CITY: - LA CLEDE
COUNTY: 017 - BONNER AQCR: 063

GOV'T FACILITY CODE: 0 - ALL OTHER FACILITIES NOT OWNED OR OPER.
AIR-PROGRAM CODE(S): V 0 AFS PLANT ID:
OPERATING STATUS : O - OPERATING

POINT INFORMATION: / 025 M - OLIVINE BURNER

ACT. NO.	PLANT	AIR PROGRM	TYPE/DESCRIPTION	DATE SCHEDULD	DATE ACHIEVED	ACT. CAT.	STAFF	RESULTS	PENALTY	RD8	PLLT/CASN	RDE 16
008	0		18 SOURCE TST CON	91/01/04	91/01/04		19	IN COMPLIANCE	0			

COMMENT NO.	COMMENT
001	C.O.-IN COMPLI.-S.T.=12.76 LBS/HR, ALLOWED 99.6 PT-OUT OF COMPLI.-S.T.=108.4 LBS/HR, ALLOWED 107

COMMENT NO.	COMMENT
001	S.T.=72.83 LBS/HR, ALLOWED 107

POINT INFORMATION: / 027 M - WOOD-FIRED BOILER (K & S)

STATE SENSITIVE INDICATOR:
DESIGN CAPACITY: 35 UNITS: 1 - MILLION BTU
CONTINUOUS EMISSIONS (Y/N): N
REGULATED SOURCE CLASS CODE: 10200906
OPERATING RESTRICTIONS:

LAST INSPECT. : 99/07/08 TYPE: 18 (STATE) : / / TYPE: (EPA)
SOOT BLOWING :
TIMES PER DAY : 0 TIMES PER WEEK: 0 AM OR PM:

COMMENT NO.	COMMENT
001 C	KIPPER & SONS BOILER BOILER PURCHASED FROM LOUISIANA PACIFIC, POST FALLS
002 C	~~MAX LOADING - 118 T/D WOODWASTE~~ DESIGN OUTPUT - ~~30,000 LBS/HR STEAM~~ 40,000 lb steam/hr
003 C	CONTROLS: MULTICLONE & ESP (~~ESP CHANGED W/FIRST SMITH BOILER~~)

STATE PRIVATE AND SENSITIVE AND DRAFT SIP DATA INCLUDED

PLANT: 00027 - RILEY CREEK LUMBER
STATE: ID/16 CITY: - LA CLEDE
COUNTY: 017 - BONNER AQCR: 063

GOV'T FACILITY CODE: 0 - ALL OTHER FACILITIES NOT OWNED OR OPER.
AIR-PROGRAM CODE(S): V 0 AFS PLANT ID:
OPERATING STATUS : O - OPERATING

POINT INFORMATION: / 027 M - WOOD-FIRED BOILER (K & S)

COMMENT NO.	COMMENT
004 C	STACK DATA: HEIGHT-~~40'11"~~ 50, DIAM-4', FLOW RATE-~~33,000~~ 42,000 ACFM, TEMP-~~331~~ 500 DEG F (STACK SHARED WITH PERRY SMITH BOILER)

AIR PROGRAM: 0 - SIP T - TEMPORARILY CLOSED
POLLUTANT-CODE: CO

---------STATE---------- --------EPA----------
COMPLIANCE STATUS: 1 - IN VIOLATION - NO SCHEDUL : -
STATE-IMPLEMENTATION-PLAN: - RDE7: RDE15:

ACT. NO.	PLANT	AIR PROGRM	TYPE/DESCRIPTION	DATE SCHEDULD	DATE ACHIEVED	ACT. CAT.	STAFF	RESULTS	PENALTY	RD8	PLLT/CASN	RDE 16
001	0	18	SOURCE TST CON	99/07/08	99/07/08		19	IN COMPLIANCE	0			

COMMENT NO.	COMMENT
001	PER 11/4/99 DEQ LETTER-MAX ALLOWABLE OPERATING RATE-32,700 LB/HR OF STEAM PROD.

POLLUTANT	STATE REGULATION	ALLOWABLE	UNITS	POT UCNTRL	UNITS	POT CNTRL	UNITS	ACTUAL UNCTRL	UNITS/METHOD
PT		00000~~0.5~~ 12.0	PH						
CO		00006~~9.9~~ ~~500~~	PH						

OK ~~60~~ 70 pph.

POINT INFORMATION: / 030 M - WOOD-FIRED BOILER (PERRY)

STATE SENSITIVE INDICATOR: N
DESIGN CAPACITY: 30 UNITS: 1 - MILLION BTU
CONTINUOUS EMISSIONS (Y/N): N
REGULATED SOURCE CLASS CODE: 10200906
OPERATING RESTRICTIONS:

---------STATE---------- --------EPA----------
LAST INSPECT. : 00/12/12 TYPE: 18 : / / TYPE:
SOOT BLOWING :
TIMES PER DAY : 0 TIMES PER WEEK: 0 AM OR PM:

STATE PRIVATE AND SENSITIVE AND DRAFT SIP DATA INCLUDED

PLANT: 00027 - RILEY CREEK LUMBER
STATE: ID/16 CITY: - LA CLEDE
COUNTY: 017 - BONNER AQCR: 063

GOV'T FACILITY CODE: 0 - ALL OTHER FACILITIES NOT OWNED OR OPER.
AIR-PROGRAM CODE(S): V 0 AFS PLANT ID:
OPERATING STATUS : O - OPERATING

POINT INFORMATION: / 030 M - WOOD-FIRED BOILER (PERRY)

COMMENT NO.	COMMENT
003 C	CONTROLS: HERNS IRON WORKS MULTICLONE & ESP (~~ESP SHARED W/ KIPPER & SONS BOILER~~) 48 NORTH ESP CELL, SOUTH ESP CELL
004 C	STACK ~~DATA~~: HEIGHT-~~48'11"~~", DIAM-4', FLOW RATE-3~~7,000 ACFM~~, 46,000 acfm TEMP-~~231 DEG~~ F (~~STACK SHARED W/KIPPER & SONS BOILER~~) each boiler has own stack
001 C	PERRY SMITH DESIGN, MANUFACTURED BY A.B. CO., HRT FIRE TUBE PER 12/31/96 PTC FOR KIPPER & SONS BOILER-AN AIR PREHEATER WILL BE INSTALLED ON THE PERRY SMITH BOILER IN CONJUNCTION WITH CONSTRUCTION OF KIPPER & SONS BOILER

AIR PROGRAM: 0 - SIP O - OPERATING
POLLUTANT-CODE: PT

---------STATE---------- --------EPA----------
COMPLIANCE STATUS: 3 - IN COMPLIANCE - INSPECTIO : -
STATE-IMPLEMENTATION-PLAN: 0 - SCHEDULE STATUS UNKNOWN RDE7: RDE15: 0

ACT. NO.	PLANT	AIR PROGRM	TYPE/DESCRIPTION	DATE SCHEDULD	DATE ACHIEVED	ACT. CAT.	STAFF	RESULTS	PENALTY	RD8	PLLT/CASN	RDE 16
001		0	26 VE READING	84/06/21	84/06/21		E34	19 IN COMPLIANCE	0			

COMMENT NO.	COMMENT
001	OPACITY READING 10.3%; ALLOWED 20%

002		0	18 SOURCE TST CON	84/09/30	/ /			02 NOT ACHIEVED	0			
003		0	18 SOURCE TST CON	84/11/09	84/11/21			18 OUT OF COMPLIAN	0			

COMMENT NO.	COMMENT
001	S.T. = .496 GR/DSCF; ALLOWED .200 GR/DSCF

004		0	18 SOURCE TST CON	85/05/30	/ /			02 NOT ACHIEVED	0			

* Permit Allowables:

PM/PM-10 = 96.2 T/yr ; ~~46 lb/hr~~ 22 lb/hr

CO = 203 T/yr ; 46 lb/hr

STATE PRIVATE AND SENSITIVE AND DRAFT SIP DATA INCLUDED

PLANT: 00027 - RILEY CREEK LUMBER
STATE: ID/16 CITY: - LA CLEDE
COUNTY: 017 - BONNER AQCR: 063

GOV'T FACILITY CODE: 0 - ALL OTHER FACILITIES NOT OWNED OR OPER.
AIR-PROGRAM CODE(S): V 0 AFS PLANT ID:
OPERATING STATUS : O - OPERATING

POINT INFORMATION: / 030 M - WOOD-FIRED BOILER (PERRY)

ACT. NO.	PLANT	AIR PROGRM	TYPE/DESCRIPTION	DATE SCHEDULD	DATE ACHIEVED	ACT. CAT.	STAFF	RESULTS	PENALTY	RD8	PLLT/CASN	RDE 16
005	0	18	SOURCE TST CON	85/09/11	85/09/11		E34	19 IN COMPLIANCE	0			

COMMENT NO.	COMMENT
001	S.T. = 0.151 GR/DSCF; ALLOWED 0.200 GR/DSCF
002	PRODUCTION LIMITED TO 32,000 LB STEAM/HR (PERMIT COND.)

006	0	26	VE READING	88/02/01	88/02/01		E34	18 OUT OF COMPLIAN	0			

COMMENT NO.	COMMENT
001	OPACITY READING 37.3%; ALLOWED 20%.

007	0	26	VE READING	88/03/01	88/03/01		E34	18 OUT OF COMPLIAN	0			

COMMENT NO.	COMMENT
001	OPACITY READING 45.4%; ALLOWED 20%.

009	0	85	SPEC ACT DUE/C	88/06/11	88/05/31			01 ACTION ACHIEVED	0			

COMMENT NO.	COMMENT
001	RESPONSE DUE FROM COMPANY TO ARRANGE A COMPLIANCE CON-
002	FERENCE.
003	CO. CONTACTED DEPT. 5/31/88-CONFERENCE SCHEDULED 6/15/88

010	0	71	ACT PL DUE/REC	88/11/27	88/12/05			32 REPORT OVERDUE	0			

COMMENT NO.	COMMENT

STATE PRIVATE AND SENSITIVE AND DRAFT SIP DATA INCLUDED

PLANT: 00027 - RILEY CREEK LUMBER
STATE: ID/16 CITY: - LA CLEDE
COUNTY: 017 - BONNER AQCR: 063

GOV'T FACILITY CODE: 0 - ALL OTHER FACILITIES NOT OWNED OR OPER.
AIR-PROGRAM CODE(S): V 0 AFS PLANT ID:
OPERATING STATUS : O - OPERATING

POINT INFORMATION: / 030 M - WOOD-FIRED BOILER (PERRY)

ACT. NO.	PLANT	AIR PROGRM	TYPE/DESCRIPTION	DATE SCHEDULD	DATE ACHIEVED	ACT. CAT.	STAFF	RESULTS	PENALTY	RD8	PLLT/CASN	RDE 16
	COMMENT NO.	COMMENT										
	001	CO. SHALL SUBMIT PROGRESS REPORT PER 11/10/88 C.O.										
	002	CO. RESPONSE (DATED 11/25/88) REC'D IN OFFICE 12/5/88										
011	0		26 VE READING	88/12/18	88/12/13		19	IN COMPLIANCE	0			
012	0		18 SOURCE TST CON	90/05/13	90/05/14		19	IN COMPLIANCE	0			
	COMMENT NO.	COMMENT										
	003	S.T. = 0.189 GR/DSCF AT 8% O2, ALLOWED 0.20										
	001	PTO REQRMT-RESULTS DUE TO DEPT. WITHIN 30 DAYS OF TEST										
	002	120 DAY EXTENSION GRANTED (FROM 1/3/90)										
013	0		26 VE READING	/ /	91/12/07		18	OUT OF COMPLIAN	0			
	COMMENT NO.	COMMENT										
	001	PLUME TURNED BLUE 50 FT DOWNWIND										
014	0		18 SOURCE TST CON	92/06/23	92/06/23		19	IN COMPLIANCE	0			
	COMMENT NO.	COMMENT										
	001	TEST CONDUCTED IN RESPONSE TO 2/27/92 EPA INFO REQUEST (114)										
	002	S.T. = 18.1 PH, ALLOWED 22.1 PH										
015	0		18 SOURCE TST CON	00/12/12	00/12/12				0			

STATE PRIVATE AND SENSITIVE AND DRAFT SIP DATA INCLUDED

PLANT: 00027 - RILEY CREEK LUMBER
STATE: ID/16 CITY: - LA CLEDE
COUNTY: 017 - BONNER AQCR: 063

GOV'T FACILITY CODE: 0 - ALL OTHER FACILITIES NOT OWNED OR OPER.
AIR-PROGRAM CODE(S): V 0 AFS PLANT ID:
OPERATING STATUS : O - OPERATING

POINT INFORMATION: / 041 M - FILE ROOM CYCLONE

STATE SENSITIVE INDICATOR:
DESIGN CAPACITY: 0 UNITS: -
CONTINUOUS EMISSIONS (Y/N): N
REGULATED SOURCE CLASS CODE: 30700808
OPERATING RESTRICTIONS:

	STATE	EPA
LAST INSPECT. :	/ / TYPE:	/ / TYPE:
SOOT BLOWING :		
TIMES PER DAY :	0 TIMES PER WEEK: 0	AM OR PM:

COMMENT NO.	COMMENT
002 C	PROCESS CYCLONE RECEIVES METAL FLAKES FROM SHARPENER &
003 C	TRANSFERS IT TO 55 GAL. CONTAINER
004 C	PROCESS CYCLONE: INLET DIAM=20", OUTLET DIAM=30", HEIGHT= 50'
001 C	CONTROLS: CYCLONE & BAGHOUSE

AIR PROGRAM: 0 - SIP 0 - OPERATING
POLLUTANT-CODE: PT

	STATE	EPA
COMPLIANCE STATUS:	1 - IN VIOLATION - NO SCHEDUL	: -
STATE-IMPLEMENTATION-PLAN:	-	RDE7: RDE15:

POINT INFORMATION: / 051 M - BOILER FUEL STORAGE BIN

STATE SENSITIVE INDICATOR: N
DESIGN CAPACITY: 0 UNITS: -
CONTINUOUS EMISSIONS (Y/N): N
REGULATED SOURCE CLASS CODE: 30703001
OPERATING RESTRICTIONS:

	STATE	EPA
LAST INSPECT. :	/ / TYPE:	/ / TYPE:
SOOT BLOWING :		
TIMES PER DAY :	0 TIMES PER WEEK: 0	AM OR PM:

COMMENT NO.	COMMENT
001 C	PER 12/31/96 PTC-NEW FUEL HANDLING SYSTEM (BELT CONVEYORS)

STATE PRIVATE AND SENSITIVE AND DRAFT SIP DATA INCLUDED

PLANT: 00027 - RILEY CREEK LUMBER
STATE: ID/16 CITY: - LA CLEDE
COUNTY: 017 - BONNER AQCR: 063

GOV'T FACILITY CODE: 0 - ALL OTHER FACILITIES NOT OWNED OR OPER.
AIR-PROGRAM CODE(S): V 0 AFS PLANT ID:
OPERATING STATUS : O - OPERATING

POINT INFORMATION: / 051 M - BOILER FUEL STORAGE BIN

COMMENT NO.	COMMENT
	AND ENCLOSED STORAGE BIN WILL BE INSTALLED WITH NEW KIPPER & SONS WOOD-FIRED BOILER)

AIR PROGRAM: 0 - SIP O - OPERATING
POLLUTANT-CODE: PT

	STATE	EPA
COMPLIANCE STATUS:	1 - IN VIOLATION - NO SCHEDUL	-
STATE-IMPLEMENTATION-PLAN:	-	RDE7: RDE15:

POINT INFORMATION: / 061 M - CHIP BINS (2)

STATE SENSITIVE INDICATOR:
DESIGN CAPACITY: 0 UNITS: -
CONTINUOUS EMISSIONS (Y/N): N
REGULATED SOURCE CLASS CODE: 30703002
OPERATING RESTRICTIONS:

	STATE	EPA
LAST INSPECT. :	/ / TYPE:	/ / TYPE:
SOOT BLOWING :		
TIMES PER DAY :	0 TIMES PER WEEK: 0 AM OR PM:	

AIR PROGRAM: 0 - SIP O - OPERATING
POLLUTANT-CODE: PT

	STATE	EPA
COMPLIANCE STATUS:	3 - IN COMPLIANCE - INSPECTIO	-
STATE-IMPLEMENTATION-PLAN:	-	RDE7: RDE15:

POINT INFORMATION: / 076 M - PLANER CYCLONE Baghouse

STATE SENSITIVE INDICATOR:
DESIGN CAPACITY: 0 UNITS: -
CONTINUOUS EMISSIONS (Y/N): N
REGULATED SOURCE CLASS CODE: 30700808
OPERATING RESTRICTIONS:

	STATE	EPA
LAST INSPECT. :	/ / TYPE:	/ / TYPE:
SOOT BLOWING :		
TIMES PER DAY :	0 TIMES PER WEEK: 0 AM OR PM:	

COMMENT NO.	COMMENT

PM - 2.14 lb/hr , 9.39 T/yr , 0.1 gr/dscf

STATE PRIVATE AND SENSITIVE AND DRAFT SIP DATA INCLUDED

PLANT: 00027 - RILEY CREEK LUMBER
STATE: ID/16 CITY: - LA CLEDE
COUNTY: 017 - BONNER AQCR: 063

GOV'T FACILITY CODE: 0 - ALL OTHER FACILITIES NOT OWNED OR OPER.
AIR-PROGRAM CODE(S): V 0 AFS PLANT ID:
OPERATING STATUS : O - OPERATING

POINT INFORMATION: / 076 M - PLANER CYCLONE Baghouse

COMMENT NO.	COMMENT
001 C	STACK DATA: HEIGHT-12', DIAM-48"
002 C	TRANSFERS SHAVINGS FROM PLANERS TO RAILCAR LOADOUT

AIR PROGRAM: 0 - SIP O - OPERATING ---------STATE---------- --------EPA----------
POLLUTANT-CODE: PT COMPLIANCE STATUS: 1 - IN VIOLATION - NO SCHEDUL : -
STATE-IMPLEMENTATION-PLAN: - RDE7: RDE15:

POINT INFORMATION: / 077 M - SAWMILL SHAVINGS BINS (3)

STATE SENSITIVE INDICATOR: N ---------STATE---------- --------EPA----------
DESIGN CAPACITY: 0 UNITS: - LAST INSPECT. : / / TYPE: : / / TYPE:
CONTINUOUS EMISSIONS (Y/N): N SOOT BLOWING :
REGULATED SOURCE CLASS CODE: 30703002 TIMES PER DAY : 0 TIMES PER WEEK: 0 AM OR PM:
OPERATING RESTRICTIONS:

AIR PROGRAM: 0 - SIP O - OPERATING ---------STATE---------- --------EPA----------
POLLUTANT-CODE: PT COMPLIANCE STATUS: 3 - IN COMPLIANCE - INSPECTIO : -
STATE-IMPLEMENTATION-PLAN: - RDE7: RDE15:

POINT INFORMATION: / 078 M - SAWDUST BINS (2)

STATE SENSITIVE INDICATOR: ---------STATE---------- --------EPA----------
DESIGN CAPACITY: 0 UNITS: - LAST INSPECT. : / / TYPE: : / / TYPE:
CONTINUOUS EMISSIONS (Y/N): N SOOT BLOWING :
REGULATED SOURCE CLASS CODE: 30703002 TIMES PER DAY : 0 TIMES PER WEEK: 0 AM OR PM:
OPERATING RESTRICTIONS:

AIR PROGRAM: 0 - SIP O - OPERATING ---------STATE---------- --------EPA----------

STATE PRIVATE AND SENSITIVE AND DRAFT SIP DATA INCLUDED

PLANT: 00027 - RILEY CREEK LUMBER
STATE: ID/16 CITY: - LA CLEDE
COUNTY: 017 - BONNER AQCR: 063

GOV'T FACILITY CODE: 0 - ALL OTHER FACILITIES NOT OWNED OR OPER.
AIR-PROGRAM CODE(S): V 0 AFS PLANT ID:
OPERATING STATUS : O - OPERATING

POINT INFORMATION: / 078 M - SAWDUST BINS (2)

POLLUTANT-CODE: PT COMPLIANCE STATUS: 3 - IN COMPLIANCE - INSPECTIO : -
STATE-IMPLEMENTATION-PLAN: - RDE7: RDE15:

POINT INFORMATION: / 079 M - RAILCAR CHIP FEED SYSTEM

STATE SENSITIVE INDICATOR: ---------STATE---------- --------EPA----------
DESIGN CAPACITY: 0 UNITS: - LAST INSPECT. : / / TYPE: : / / TYPE:
CONTINUOUS EMISSIONS (Y/N): N SOOT BLOWING :
REGULATED SOURCE CLASS CODE: 30700896 TIMES PER DAY : 0 TIMES PER WEEK: 0 AM OR PM:
OPERATING RESTRICTIONS:

AIR PROGRAM: 0 - SIP O - OPERATING ---------STATE---------- --------EPA----------
POLLUTANT-CODE: PT COMPLIANCE STATUS: 3 - IN COMPLIANCE - INSPECTIO : -
STATE-IMPLEMENTATION-PLAN: - RDE7: RDE15:

POINT INFORMATION: / 080 M - PLANT PROPERTY/ROADS

STATE SENSITIVE INDICATOR: ---------STATE---------- --------EPA----------
DESIGN CAPACITY: 0 UNITS: - LAST INSPECT. : / / TYPE: : / / TYPE:
CONTINUOUS EMISSIONS (Y/N): N SOOT BLOWING :
REGULATED SOURCE CLASS CODE: 30700899 TIMES PER DAY : 0 TIMES PER WEEK: 0 AM OR PM:
OPERATING RESTRICTIONS:

AIR PROGRAM: 0 - SIP O - OPERATING ---------STATE---------- --------EPA----------
POLLUTANT-CODE: FD COMPLIANCE STATUS: 3 - IN COMPLIANCE - INSPECTIO : -
STATE-IMPLEMENTATION-PLAN: - RDE7: RDE15:

June 15, 2001

STATE OF IDAHO DEPARTMENT OF ENVIRONMENTAL QUALITY RESPONSES TO COMMENTS AND QUESTIONS SUBMITTED DURING A PUBLIC COMMENT PERIOD FOR THE PROPOSED PERMIT TO CONSTRUCT FOR RILEY CREEK LUMBER COMPANY

Introduction

The public comment period for the Riley Creek Lumber Company (Riley Creek) permit application and proposed Permit to Construct (PTC) was held from April 24, 2001 through May 24, 2001 as required by IDAPA 58.01.01.209 (*Rules for the Control of Air Pollution in Idaho*). The proposed permit contains administrative amendments and a permit modification to the facility's two existing PTCs. Comment packages that included the permit application submitted by Riley Creek, Idaho Department of Environmental Quality (DEQ) technical analysis, and the proposed permit were made available at DEQ's State Office in Boise, DEQ's Regional Office in Coeur d'Alene, and the West Bonner Library in Priest River. Comments were received by DEQ by mail.

Public comments regarding the air quality aspects of the proposed permit and analysis have been summarized below. Questions, comments, and/or suggestions received during the comment period which do not relate to the air quality aspects of the permit application, DEQ's technical analysis, or the proposed permit are not addressed.

Public Comments and DEQ Responses

Comment 1: **A comment was received questioning the increase in emissions from Riley Creek's Laclede facility.**

Response to 1: The proposed increase is an increase of approximately 39 tons-per-year (T/yr) of carbon monoxide (CO) emissions. By law, an emissions increase is allowed provided the increase does not cause or contribute to a violation of an applicable ambient air quality standard. Riley Creek conducted a source test to measure CO emissions in December 2000. The source test results indicated that Riley Creek was operating well within their permit limit for CO during the testing period. Riley Creek proposed to increase the allowable limit by 8 pounds-per-hour (lb/hr), which is equivalent to approximately 39 T/yr assuming continuous operation. The emissions increase was modeled using the U.S. Environmental Protection Agency approved SCREEN3 air quality computer model to predict the impact on the ambient air. The SCREEN3 model is a very conservative model that typically over predicts source impacts. It does this by assuming the source operates under the worst possible meteorological conditions instead of actual site-specific meteorological conditions. If the predicted impact under this assumption indicates the source will not cause or contribute to a violation of an ambient air quality standard, it is safe to assume that operations will not adversely effect human health or the environment. Using the SCREEN3 model, the predicted impact on the ambient air due to the increase in CO emissions is well within state and federal air quality standards. Therefore, the increase in emissions is allowed as mandated by law.

The proposed permit also indicates an increase in particulate matter from boiler #2. The increase is based on the discovery of inaccurate information submitted in Riley Creek's original permit application for the boiler. In that application, the steaming rate for boiler #2 was indicated to be 35,000 lb/hr and the boiler was assumed to operate at 100 percent efficiency. In actuality, the steaming rate is 40,000 lb/hr, but the boiler efficiency is only 65 percent, which is typical for wood-fired boilers.

Boiler #2 has not been modified in any way since it was constructed. The emissions increase, in this case, is a paper increase that more accurately represents emissions from the boiler.

Comment 2: **A comment was submitted stating emissions from the facility have adversely impacted nearby residents.**

Response to 2: In an effort to operate the facility's wood-fired boilers in a manner that limits air pollution, Riley Creek will install, calibrate, maintain, and operate monitoring devices to measure the steam production rate of the boilers. In addition, Riley Creek is required to monitor and record the steam production rate hourly. These requirements force Riley Creek to watch the boilers' performance. Constant steam production is an indication of good combustion. Fluctuating steam production is an indication of poor combustion. Poor combustion leads to increases in air pollution. By regulating steam production so it is constant, air emissions are maintained at allowable levels.

As required by a Consent Order, Riley Creek is required to install a baghouse on the planer shavings cyclone to reduce particulate matter emissions. After installation, emissions from the cyclone will decrease by 11.42 T/yr.

End of comments.