CH2MHILL®

TRANSMITTAL LETTER

RECEIVED
APR 23 2015
DEPARTMENT OF ENVIRONMENTAL QUALITY
STATE A Q PROGRAM

To: DEQ Air Quality Program
1410 N. Hilton
Boise, ID 83706

From: Rick McCormick
CH2M HILL
322 East Front St, Ste 200
Boise, ID 83702

Attn: Bill Rogers

Date: 04-23-15

Re: Nunhems USA (Bayer Crop Science)
Air Quality PTC Application

Method of shipment: Hand Deliver

We Are Sending You:

☐ Attached ☐ Under separate cover via

☒ Documents ☐ Copies

☐ Drawings ☐ Specifications ☐ Other

Quantity	Description
1	PTC Application (Including CD on inside cover with modeling files and emission estimates)

RECEIVED
APR 23 2015
By

If the material received is not as listed, please notify us at once.

cc. Mark Gallegos, Nunhems Facility Manager

Permit to Construct Application
Parma, Idaho Facility

Nunhems USA

Prepared for

Nunhems USA

Submitted to

Idaho Department of Environmental Quality

April 2015

CH2MHILL

Contents

Section **Page**

Contents ..... **i**
1.0 Introduction **1**
2.0 Process Description **3**
3.0 Emissions Estimates **5**
4.0 Facility Classification **7**
5.0 Dispersion Modeling **9**
6.0 Applicable Requirements **11**

Figures

Figure 1 – Scaled Plot Plan

Appendixes

A DEQ Consent Order
B DEQ Application Denial Letter
C Manufacturer Specifications
D DEQ Permit-To-Construct Application Forms
E Emissions Estimates
F MSDS Sheets
G Air Dispersion Modeling Protocol
H DEQ Air Dispersion Modeling Protocol Approval Letter
I Modeling Results
J Applicable Requirements 40 CFR 60 Subpart IIII
K Applicable Requirements 40 CFR 63 Subpart ZZZZ
L Process Weight calculations

COPYRIGHT 2015 BY CH2M HILL, INC. • COMPANY CONFIDENTIAL

1 Introduction

On behalf of the Nunhems USA (Nunhems), CH2M HILL has prepared an air quality Permit-to-Construct (PTC) application in accordance with Idaho Administrative Procedures Act (IDAPA) 58.01.01.200.Nunhems operates a Seed Treatment Processing facility located at 1200 Anderson Corner Road, Parma, Idaho (facility).

On October 17, 2012, Nunhems was issued a Consent Order for operating without an air quality PTC by the IDEQ. Nunhems is currently working with the IDEQ to prepare a new PTC application and resolve the issues associated with the Consent Order. Nunhems is hereby requesting to close out Consent Order No. E-2012.0007 once a PTC is issued by the Idaho Department of Environmental Quality (IDEQ). A copy of the Consent Order is included in Appendix A.

On June 28, 2013, Nunhems was issued a permit denial letter by IDEQ for an incomplete permit application. A copy of the IDEQ PTC application denial letter is provided in Appendix B.

In July 2013, Nunhems contracted with CH2M HILL to prepare a new PTC application. This PTC application addresses the previous permit application deficiencies as well as identification of over 50 new emission sources which primarily consist of propane-fired space heaters and HVAC units. These additional emission sources were identified during a site visit of the facility on July 23, 2013 and are located in several buildings within the footprint of the facility. A scaled plot plan showing the property boundary and emission source locations are included in Figure 1.

The identified deficiencies and new source additions include the following:

- This PTC application will be limited to 3 emergency standby generators.
- Each emergency standby generator will run for one-hour each month for maintenance and testing purposes. Maintenance and testing will be limited to 100 hr/yr for each emergency generator.
- Stack parameters were verified for all stationary sources including stack heights, exit diameters, orientation (vertical or horizontal). Manufacturer information is provided in Appendix C.
- DRYER 2 is a series of 14 dryer vents with seed bins placed on top, and all of which is under an overhang approximately 12-feet off the ground.
- Heater 1 was previously identified as a horizontal dimension based on the width of the associated building instead of the actual vent width (corrected on modeling form MI3 in Appendix D).

COPYRIGHT 2010 BY CH2M HILL, INC. • COMPANY CONFIDENTIAL

- Source locations in relation to buildings and property fenceline were verified during a July 2013 site visit (refer to Figure 1).
- Modeling input parameters were verified and entered into the BEEST program.
- An additional 28 propane-fired space heaters and 30-propane fired HVAC units were identified throughout the facility during a site visit on July 2013 and added to the emissions inventory.
- A 6th FARR unit was added.
- DRYER 1 (seed dryer) previously identified as a 1 MMBtu/hr dual-fired source venting out of a common 18-inch diameter stack were actually two separate propane units with separate vents. Three additional propane-fired dryers (DRYER 3, DRYER 4A and DRYER 4B) were added to the emissions inventory. DRYER 3 vents through its own stack. DRYER 4A and 4B share vents with FARR 03 and FARR 04, respectively.
- The flow rates for the Herding Filtration units (HERD 01 and HERD 02) were incorrectly identified. HERD 01 is correctly identified at 4,700 cfm and HERD 02 is 23,200 cfm.

The objective of this PTC application is to obtain a minor source PTC for the existing Nunhems facility. Stationary emission sources include:

- 3 emergency standby generators
- 8 dust collectors
- 6 FARR cartridge collectors
- 2 Herding filtration units
- 1 Murphy Rodgers Baghouse
- Two volume source heating units (Bldg Q and BldgL)
- Six seed dryer systems
- 28 propane fired heating units
- 30 propane fired HVAC units

COPYRIGHT 2010 BY CH2M HILL, INC. • COMPANY CONFIDENTIAL

2.0 Process Description

Nunhems operates a seed process facility near Parma, Idaho. There are a total of five processing stages; warehousing, seed conditioning, seed enhancement, seed treatment, and packaging and shipping.

A detailed description of Nunhems facility and can be found in the Impact Modeling Analyses Report, Appendix I, Section 1.1 General Facility/Project Description.

IDEQ permit application forms are provided for the WWTP in Appendix D.

COPYRIGHT 2010 BY CH2M HILL, INC. • COMPANY CONFIDENTIAL

3.0 Emissions Estimates

Criteria pollutant and toxic air pollutant (TAP) potential emission estimates have been prepared for approximately 86 sources including process equipment (baghouses, filters, process heaters, etc.) propane-fired source heaters, and HVAC units. CH2M HILL utilized available manufacturer emissions data to generate potential emission rates. If manufacturer emissions data was not available, EPA AP-42 emission factors were used. Potential emission estimates for the facility are included in Appendix E.

Emission estimates were based on the combustion equipment design specifications listed in the Impact Modeling Analyses Report, Appendix I, Section 3 Modeled Emissions Sources.

Toxic Air Pollutants (TAPs) emissions were estimated and compared to the screening emission limits (EL) specified in IDAPA 58.01.01.585 and 586. None of the TAPs exceeded the EL; therefore, no modeling was performed for TAPs.

Box chamber fumigation emission calculations are presented below for phosphine and ammonia gases. Safety data sheets were reviewed for *Weevil-cide* and the *Applicator's Manual for Fumitoxin.* Reference information is included in Appendix F.

Based on MSDS, Weevil-cide is comprised of 60-percent aluminum phosphide which reacts with water to produce phosphine (PH_3), and 20% with ammonium carbamate which breaks down to ammonia (NH_3) and carbon dioxide (CO_2) as shown in the following reactions:

<u>Aluminum phosphide</u>

$AlP + 3H_2O \rightarrow Al(OH)_3 + PH_3$

Molar weights

AlP = 26.98 g/mol + 30.97 g/mol = 57.95 g/mol

H_2O = (2) 1 g/mol + 16 = 18 g/mol

$Al(OH)_3$ = 26.98 g/mol + (16 +1)(3) g/mol = 77.98 g/mol

PH_3 = 30.97 g/mol + (3) 1 g/mol = 33.97 g/mol

At 0.634 grams/pill and 60-percent by weight

(0.634 g/pill) x (60-percent) x (33.97g/mol) / (57.95 g/mol) = 0.223 g/pill PH_3

(0.223 g/pill PH3) x (200 pills/fume) x (1 fume/24 hour) x (1 lb / 453.59 gram/lb) = **0.0041 lb/hr PH_3**

(0.0041 lb/hr PH_3) x (24 hour / fume) x (91 fume / year) / (2000 lb/ton) = **0.00447 ton/yr PH_3**

<u>Ammonium carbamate</u>

$NH_2COONH_4 \rightarrow 2NH_3 + CO_2$

COPYRIGHT 2010 BY CH2M HILL, INC. • COMPANY CONFIDENTIAL

Molar weights

NH_2COONH_4 = 78 g/mol

NH_3 = 14 g/mol + (3) 1 = 17 g/mol x 2 = 34 g/mol

CO_2 = 12 g/mol + (2) 16 = 44 g/mol

At 0.634 grams/pill and 20-percent by weight

(0.634 g/pill) x (20-percent) x (34 g/mol) / (78 g/mol) = 0.055 g/pill NH_3

(0.055 g/pill NH3) x (200 pills/fume) x (1 fume/24 hour) x (1 lb / 453.59 gram/lb) = **0.0010 lb/hr NH_3**

(0.0010 lb/hr NH_3) x (24 hour / fume) x (91 fume / year) / (2000 lb/ton) = **0.0011 ton/yr NH_3**

COPYRIGHT 2010 BY CH2M HILL, INC. • COMPANY CONFIDENTIAL

4.0 Facility Classification

The Nunhems facility is classified as a minor facility because its potential-to-emit (PTE) is less than major source thresholds of 100 tons per year. The facility is not a designated facility as defined in IDAPA 58.01.01.006 and the facility is not a major source as defined in IDAPA 58.01.01.008.

The facility is located in Payette County which is classified as attainment or unclassifiable area for all regulated air pollutants.

COPYRIGHT 2010 BY CH2M HILL, INC. • COMPANY CONFIDENTIAL

5.0 Dispersion Modeling

A revised air dispersion modeling protocol was prepared by CH2M HILL and submitted to IDEQ via e-mail on September 5, 2014. IDEQ conditionally approved the modeling protocol on January 29, 2015**.** A hardcopy of the air dispersion modeling protocol and IDEQ protocol approval letter are included in Appendix G and Appendix H; respectively. The complete Impact Modeling Analyses Report is included in Appendix I.

Stack Parameters

Emission rates were based on the maximum heat input rating or maximum power rating for each emissions unit. Stack parameters were derived from manufacturer specifications or site knowledge from Nunhems facility maintenance personnel (where manufacturer information is not available) and are based on typical operating conditions. Stack emission release parameters for the sources are identified in Appendix I, Table 7. Manufacturer information is included in Appendix C.

Modeling Results

Air dispersion modeling was conducted based on the stack parameter information provided in Appendix I Table 7 and in accordance with the IDEQ-approved modeling protocol. A fenceline surrounding the facility defines the ambient air boundary. Facility-wide modeling was based on potential emission rates. The modeling results were evaluated and compared against the applicable National Ambient Air Quality Standards (NAAQSs) for PM_{10}, NO_x, and SO_2. Detailed explanation and results of the facility wide modeling are included in Appendix I.

COPYRIGHT 2010 BY CH2M HILL, INC. • COMPANY CONFIDENTIAL

6.0 Applicable Requirements

A regulatory analysis was performed for the facility to determine the applicability of the state and federal air quality regulations. The regulatory applicability determinations are included in this section.

The following sections address air quality regulatory compliance requirements for the facility. As detailed below, the sources comply with the applicable Idaho air quality regulations codified in Idaho Administrative Procedure Act (IDAPA) 58.01.01, as well as US Environmental Protection Agency (EPA) Federal regulations.

Federal Regulations

New Source Review and Prevention of Significant Deterioration Applicability—40 CFR Parts 51 and 52

In accordance with EPA and IDAPA 58.01.01.205 rules, the proposed facility will not be required to submit a construction permit application subject to the requirements of New Source Review (NSR) as it is not a major new source.

Greenhouse Gas Tailoring Rule

On May 13, 2010, the U.S. Environmental Protection Agency (EPA) issued a final rule that establishes an approach to addressing greenhouse gas emissions from stationary sources under the Clean Air Act (CAA) permitting programs. This final rule sets thresholds for GHG emissions that define when permits under the NSR, PSD, and Title V Operating Permit programs are required for new and existing facilities. This rule "tailors" the requirements of these CAA permitting programs to limit which facilities will be required to obtain PSD and Title V permits.

Beginning July 1, 2011, the PSD major source threshold of 100,000 tons per year CO2e became effective. A new source with potential GHG emissions above 100,000 tons per year CO2e is now subject to PSD permitting requirements for GHGs, regardless of whether PSD is also triggered for non-GHG pollutants. Modifications to existing major sources (defined relative to the new 100,000 tons per year threshold for CO2e or the 100/250 tons per year threshold for traditional NSR regulated pollutants) that result in an increase of GHG emissions by 75,000 tons per year CO2e or more are subject to PSD permitting requirements for GHGs. Therefore, beginning July 1, 2011, PSD for GHG pollutants can be triggered regardless of whether PSD is also triggered for non-GHG pollutants. In addition, beginning July 1, 2011, facilities with potential CO2e emissions of 100,000 tons per year or more are subject to Title V permitting requirements.

For determining PSD (or Title V) major source or major modification applicability, the quantity of GHGs emitted must not only equal or exceed 100,000 tons per year (75,000 tons per year for modifications) thresholds on a CO2e basis, but the sum of emissions of each GHG pollutant not adjusted for its global warming potential must also exceed the applicable threshold for non-GHG regulated pollutants (i.e., 100 tons per year for Title V or 100 tons

COPYRIGHT 2010 BY CH2M HILL, INC. • COMPANY CONFIDENTIAL

per year/250 tons per year for PSD, depending on whether the source is on the list of 28 PSD categories or a designated facility as defined in IDAPA 58.01.01.006.26v).

As the total facility CO2e is 6,990 tons per year, the facility is not subject to PSD or Title V operating permit programs with respect to the GHG Tailoring Rule at this time.

New Source Performance Standards - 40 CFR Part 60 Subpart IIII (Standards of Performance for Stationary Compression Ignition Internal Combustion Engines)

Two emergency standby diesel-fired engine generators (Caterpillar 250 kW and Cummins 1645 kW) are subject to 40 CFR Part 60 Subpart IIII, Standards of Performance for Stationary Compression Ignition Internal Combustion Engines. A regulatory review was prepared for each emergency generator to identify the applicable requirements in Subpart IIII (Appendix J).

National Emission Standards for Hazardous Air Pollutants - 40 CFR Part 63

Section 112 of the Clean Air Act (CAA) Amendments relates to the release of air toxic contaminants. The requirements of CAA Section 112(g) or (j) are not applicable because the facility is not a major source of HAPs (40 CFR 63.40(b)). Part 63 National Emission Standards for Hazardous Air Pollutants (NESHAPS) apply to both major sources of HAPs, defined as PTE equal to or greater than 10 tons per year for any single HAP or PTE equal to or greater than 25 tons per year for total HAP, and area sources of HAPs as defined as any stationary source of HAPs that is not a major source. As HAP emissions are below major source thresholds, Nunhems is not a major source of HAPs. However the facility is an area source of HAPs.

National Emission Standard for Hazardous Air Pollutants - 40 CFR Part 63 Subpart ZZZZ (NESHAP for Stationary Reciprocating Internal Combustion Engines)

One emergency standby diesel-fired engine generator is subject to 40 CFR Part 63 Subpart ZZZZ. A detailed analysis of the applicable requirements are provided in Appendix K. Note that compliance with the applicable emission and operating limitations became effective on May 3, 2013 for existing stationary combustion ignition RICE located at an area source of HAP emissions.

IDAPA Regulations

IDAPA 58.01.01.130

STARTUP, SHUTDOWN, SCHEDULED MAINTENANCE, SAFETY MEASURES, UPSET AND BREAKDOWN.

If an excess emission event occurs during startup, shutdown, scheduled maintenance, safety measures, upset or breakdown, Nunhems will comply with IDAPA 58.01.01.130 through 58.01.01.136.

COPYRIGHT 2010 BY CH2M HILL, INC. • COMPANY CONFIDENTIAL

IDAPA 58.01.01.161
TOXIC SUBSTANCES

"Any contaminant which is by its nature toxic to human or animal life or vegetation shall not be emitted in such quantities or concentrations as to alone, or in combination with other contaminants, injure or unreasonably affect human or animal life or vegetation."

See emission calculations in Appendix E and modeling results in Appendix I.

IDAPA 58.01.01.200
PROCEDURES AND REQUIREMENTS FOR PERMITS TO CONSTRUCT

Nunhems will follow the procedures and requirements outlined under IDAPA 58.01.01.200 for obtaining a PTC.

IDAPA 58.01.01.210
DEMONSTRATION OF PRECONSTRUCTION COMPLIANCE WITH TOXIC STANDARDS

"In accordance with Subsection 203.03, the applicant shall demonstrate preconstruction compliance with Section 161 to the satisfaction of the Department. The accuracy, completeness, execution and results of the demonstration are all subject to review and approval by the Department."

See emission calculations in Appendix E and modeling results in Appendix I.

IDAPA 58.01.01.577
AMBIENT AIR QUALITY STANDARDS FOR SPECIFIC AIR POLLUTANTS

Nunhems will comply with the applicable ambient air quality standards in support of this PTC modification.

IDAPA 58.01.01.590
NEW SOURCE PERFORMANCE STANDARDS

Please see compliance review in the federal summary.

IDAPA 58.01.01.591
NATIONAL EMISSION STANDARDS FOR HAZARDOUS AIR POLLUTANTS

Please see compliance review in the federal summary

IDAPA 58.01.01.625
VISIBLE EMISSIONS

"A person shall not discharge any air pollutant into the atmosphere from any point of emission for a period or periods aggregating more than three (3) minutes in any sixty (60) minute period which is greater than twenty percent (20%) opacity as determined by this section."

IDAPA 58.01.01.650
RULES FOR CONTROL OF FUGITIVE DUST

COPYRIGHT 2010 BY CH2M HILL, INC. • COMPANY CONFIDENTIAL

Nunhems will take all reasonable precautions to prevent the generation of fugitive dust as outlined under IDAPA 58.01.01.650-651.

IDAPA 58.01.01.651
GENERAL RULES

"All reasonable precautions shall be taken to prevent particulate matter from becoming airborne. In determining what is reasonable, consideration will be given to factors such as the proximity of dust emitting operations to human habitations and/or activities and atmospheric conditions which might affect the movement of particulate matter. Some of the reasonable precautions may include, but are not limited to, the following:"

IDAPA 58.01.01.651.01 Use Of Water or Chemicals

"Use, where practical, of water or chemicals for control of dust in the demolition of existing buildings or structures, construction operations, the grading of roads, or the clearing of land."

IDAPA 58.01.01.651.02 Application Of Dust Suppressants

"Application, where practical, of asphalt, oil, water or suitable chemicals to, or covering of dirt roads, material stockpiles, and other surfaces which can create dust."

IDAPA 58.01.01.651.04 Covering Of Trucks

"Covering, when practical, open bodied trucks transporting materials likely to give rise to airborne dusts."

IDAPA 58.01.01.651.05 Paving

"Paving of roadways and their maintenance in a clean condition, where practical."

IDAPA 58.01.01.651.06 Removal of Materials

"Prompt removal of earth or other stored material from streets, where practical."

IDAPA 58.01.01.701
PARTICULATE MATTER – NEW EQUIPMENT PROCESS WEIGHT LIMITATIONS

1. Dust Collectors (1-8)
2. Cartridge Collectors (1-6)
3. Murphy Rodgers Baghouse
4. Herding Filtration System (1-2)

As detailed in Appendix L, Nunhems complies with the applicable process weight requirements outlined under IDAPA 58.01.01.701.

IDAPA 58.01.01.725
RULES FOR SULFUR CONTENT OF FUELS
Ultra low sulfur diesel fuel will be used in the emergency generators.

IDAPA 58.01.01.775
RULES FOR CONTROL OF ODORS

COPYRIGHT 2010 BY CH2M HILL, INC. • COMPANY CONFIDENTIAL

IDAPA 58.01.01.776
GENERAL RULES

IDAPA 58.01.01.776.01 General Restrictions

"No person shall allow, suffer, cause or permit the emission of odorous gases, liquids or solids into the atmosphere in such quantities as to cause air pollution."

Nunhems will follow the guidelines set under IDAPA 58.01.01.775 through IDAPA 58.01.01.776 to control odorous emissions from all sources for which no gaseous emission control rules apply.

COPYRIGHT 2010 BY CH2M HILL, INC. • COMPANY CONFIDENTIAL

Figure 1

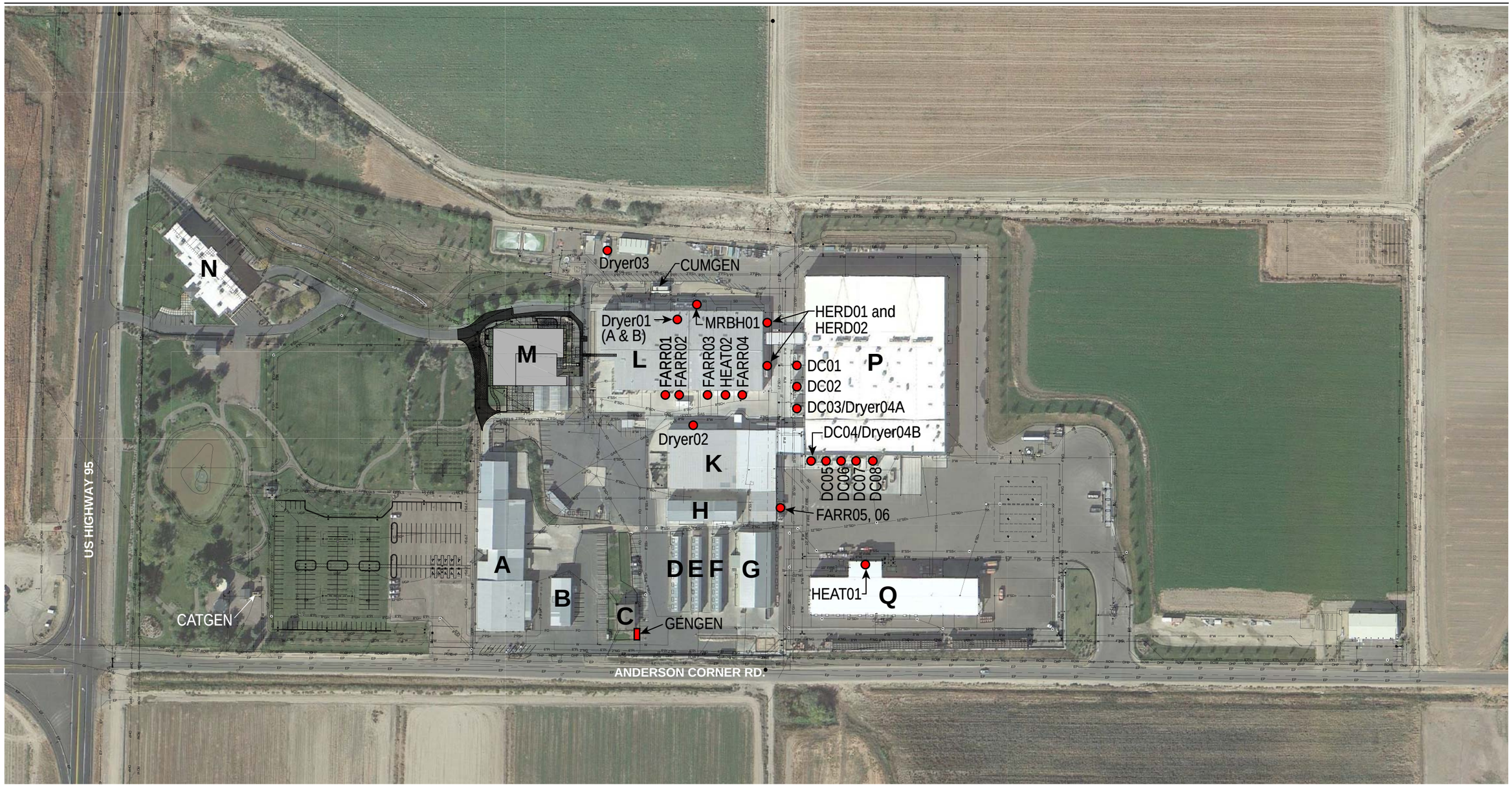

North

0 100 200 300 400
Approximate scale in feet

NOTE:
Does not include building propane heaters and HVAC units.

FIGURE 1
PARMA SITE OVERVIEW
Nunhems USA, Inc.

CH2MHILL.

ES080613203629BOI

Appendix A

DEQ Consent Order

RECEIVED
OCT 17 2012
DEPARTMENT OF ENVIRONMENTAL QUALITY
STATE A.Q. PROGRAM

DEPARTMENT OF ENVIRONMENTAL QUALITY

IN THE MATTER OF

Nunhems USA, Inc. 1200 Anderson Corner Road Parma, ID 83660	)	**CONSENT ORDER** Idaho Code § 39-108

1. Pursuant to the Idaho Environmental Protection and Health Act (EPHA), Idaho Code § 39-108, the Department of Environmental Quality (DEQ) enters into this Consent Order with Nunhems USA, Inc. (Nunhems) located near Parma, Payette County, Idaho.

2. Nunhems registered to do business in Idaho, owns and operates a vegetable seed processing plant in Parma, Idaho, an air pollution source regulated under EPHA and the Rules for the Control of Air Pollution in Idaho (Rules), IDAPA 58.01.01.001 through 999.

3. On November 22, 2011, DEQ conducted an air quality compliance inspection of the Nunhems facility. Information obtained through the inspection and otherwise available to DEQ revealed an apparent violation of the Rules.

4. By Notice of Violation (NOV) dated July 9, 2012, DEQ notified Nunhems of the violation. DEQ provided Nunhems with the opportunity for a compliance conference to discuss correction of the violations and entry into a Consent Order with DEQ. The NOV is incorporated into this Consent Order by reference.

5. On August 23, 2012, the compliance conference was held. Nunhems responded to each alleged violation cited and presented actions taken or proposed to achieve compliance.

6. In order to resolve this matter without litigation or further controversy, Nunhems agrees to the provisions of this Consent Order and the following terms and actions:

7. **PERMIT TO CONSTRUCT**

   A. The NOV cites one violation of IDAPA 58.01.01.201, for failing to obtain a PTC prior to commencing construction and/or modification at their Parma facility.

   B. DEQ will review Nunhems PTC application in accordance with IDAPA 58.01.01.201 through 299.

C. In the event that DEQ requires additional information to issue a PTC, Nunhems shall submit the requested information to DEQ within 30 days of receiving a written request from DEQ.

D. In order to fully resolve Violation No. 1, Nunhems shall: 1) obtain a PTC prior to constructing and operating new sources of air emissions, and/or modifying existing sources of air emissions; and 2) fulfill the requirements appearing under Section 9 of this Consent Order.

8. **INSPECTION**

A. Pursuant to Idaho Code § 39-108 and this Consent Order, DEQ may conduct inspections as necessary to verify compliance with all applicable Sections and requirements appearing in this Consent Order.

9. **PENALTIES**

A. As a result of Nunhems good faith efforts to resolve the aforementioned violations and to prevent future occurrences, DEQ has determined to allow a Forty Percent (40%) reduction in assessed penalties (i.e., $400).

B. Therefore, Nunhems shall pay to DEQ a civil penalty of Six Hundred Dollars, ($600) for the alleged violation.

C. Payment shall be made within 15 days of the effective date of this Consent Order.

10. Penalty payments shall be made by check payable to the Department of Environmental Quality. Please send the penalty payment to the following address:

Accounts Receivable – Fiscal Office
Air Quality Penalty Payment
Department of Environmental Quality
1410 N. Hilton
Boise, Idaho 83706-1255

11. All correspondence sent by Nunhems to DEQ regarding this Consent Order shall be addressed to:

Thomas Krinke, Air Quality Compliance Officer
Boise Regional Office
Department of Environmental Quality
1445 N. Orchard
Boise, ID 837012

12. All correspondence sent by DEQ to Nunhems regarding this Consent Order shall be addressed to:

Tracy Landry
Nunhems USA, Inc.
1200 Anderson Corner Road
Parma, ID 83660

13. This Consent Order shall not relieve Nunhems from its obligation to comply with any of the provisions of EPHA, the Rules, any provision of an air quality permit issued by DEQ to Nunhems, or other applicable local, state, or federal laws and regulations.

14. This Consent Order shall bind Nunhems, its successors and assigns until such time as the terms of the Consent Order are met and DEQ terminates the Consent Order in writing.

15. Nunhems expressly recognizes that failure to comply with the terms of this Consent Order may result in a district court action for specific performance of the Consent Order, civil penalties, assessment of costs, restraining orders, injunctions, and other relief available under law.

16. If any event occurs that causes, or may cause, delay in the achievement of any requirement of this Consent Order, Nunhems shall notify DEQ in writing within ten days of the date Nunhems knew, or should have known, of the delay.

Any notice under this paragraph shall describe in detail the anticipated length of the delay, all anticipated consequences of the delay, measures taken by Nunhems to prevent or minimize the delay, and a timetable by which those measures shall be implemented.

Nunhems shall utilize all reasonable measures to avoid or minimize any such delay. If DEQ determines that the delay or anticipated delay in achieving any requirements of this Consent Order has been or will be caused by circumstances beyond the reasonable control of Nunhems, DEQ may grant an extension for a period equal to the length of the delay.

The burden of proving that any delay is caused by circumstances beyond the reasonable control of Nunhems shall rest wholly with Nunhems.

17. A waiver by DEQ of any provision, term, condition, or requirement of this Consent Order shall not constitute a waiver of any other provision, term, condition, or requirement.

18. DEQ and Nunhems represent and warrant that each has the authority to enter into this Consent Order and to take all actions provided for herein, and no further action or authorization is required.

19. In case any provision or authority of this Consent Order or the application of this Consent Order to any party or circumstances is held by any judicial or administrative authority to be invalid, the application of such provisions to other parties or circumstances and the remainder of the Consent Order shall remain in force and shall not be affected thereby.

20. The effective date of this Consent Order shall be the date of the signature by the Director of the Department of Environmental Quality.

DATED THIS 13 day of OCTOBER, 2012

TYSON SMITH
Country Head USA, Authorized Representative of Nunhems USA, Inc.

DATED THIS 19th day of Oct., 2012

CURT A. FRANSEN
Director, Department of Environmental Quality

Appendix B

DEQ Application Denial Letter

STATE OF IDAHO
DEPARTMENT OF
ENVIRONMENTAL QUALITY

1410 North Hilton • Boise, Idaho 83706 • (208) 373-0502

C.L. "Butch" Otter, Governor
Curt Fransen, Director

June 28, 2013

Certified Mail No.

Tyson Smith, Country Head USA
Nunhems USA, Inc.
1200 Anderson Corner Rd.
Parma, ID 83660

Re: Facility ID No. 027-00130, Nunhems USA, Inc., Parma
Permit Denial, P-2012.0024 Project 61035, Initial Permit to Construct for a Seed Treatment Processing Facility

Dear Mr. Smith:

On April 26, 2012, the Department of Environmental Quality (DEQ) received a permit to construct application from Nunhems USA, Inc. for its seed processing and shipping facility in Parma. On June 27, 2012, DEQ determined the application was complete. Based on review of the application materials, all applicable state and federal rules and regulations, the DEQ has determined that your application does not demonstrate compliance with IDAPA 58.01.01.200-228, Rules for the Control of Air Pollution in Idaho.

Based on DEQ's review and analysis of all submitted application materials, it has been determined that emissions from the Nunhems USA, Inc. facility may cause a violation to an ambient air quality standard. In accordance with IDAPA 58.01.01.203.02, no permit to construct shall be granted for a new or modified stationary source unless the applicant shows to the satisfaction of DEQ that the stationary source or modification would not cause, or significantly contribute to, a violation of any ambient air quality standard. Therefore, processing of this permit application has ceased and this permitting project has been terminated.

In order to obtain a permit to construct and otherwise fulfill the intent of your October 19, 2012, Consent Order (Case No. E-2012.0007), DEQ requests that you submit a new permit to construct application, accompanied by the applicable $1,000 permit to construct application fee, within 30 days of receiving this correspondence, in accordance with Section 7.C of the aforementioned Consent Order. Please ensure that the submitted permit to construct application is certified in accordance with IDAPA 58.01.01.123.

If you have questions or concerns about this determination, or about the permitting process, please contact me at (208) 373-0477 or carole.zundel@deq.idaho.gov. Questions regarding the air dispersion modeling analysis should be directed to Cheryl Robinson at (208) 373-0220 or cheryl.robinson@deq.idaho.gov.

Sincerely,

Carole Zundel

Carole Zundel
Permit Writer
Air Quality Division

Permit No. P-2012.0024 Project 61035
Case No. E-2012.0007

Appendix C

Manufacturer Specifications

SEED DRYER 1A

Rated Heat Input 1.0 mm BTU/hr
Field Verified by Mike Wirtz on 7/24/14 MW 7/9/2015

Reinders Almelo

IND. HEATING & AIRCONDITIONING

Plesmanweg 17
7602 PD Almelo
P.O. Box 142
7600 AC Almelo
The Netherlands
Phone: +31 (0) 546 876 500
www.reinders.nl

Type:	RIH-1725-RAD	Dry air volume	14500 m^3/h
Serial No.:	3064700-010	Dehumidification:	120 Kg/Hour (at 21°C / 95% rF)
Manufactured:	2007	Cooling capacity:	160 kW
Total weight:	1925 kg	Heating capacity	225 kW
Total electric power:	24 kW		
Rated Voltage:	440 V / 3 N / 60 Hz /32 A		
Operational limits:	-10°C / + 35°C		

CE

$$\left(14{,}500\ \frac{m^3}{hr}\right)\left(\frac{1\ hr}{60\ min}\right)\left(\frac{35.3147\ ft^3}{1\ m^3}\right) = 8{,}534\ \frac{ft^3}{min}$$

SEED DRYER 1B
Rated Heat Input 1.0 mm Btu/hr
Field Verified by Mike Wurtz on 7/24/14 MW 2/9/2015

Reinders Almelo

IND. HEATING & AIRCONDITIONING

Plesmanweg 17
7602 PD Almelo
P.O. Box 142
7600 AC Almelo
The Netherlands
Phone: +31 (0) 546 876 500
www.reinders.nl

Type:	RIH-1540-RAD	Dry air volume	11500 m^3/h
Serial No.:	3064700-020	Dehumidification:	70 Kg/Hour (at 16° / 70% rF)
Manufactured:	2007	Cooling capacity:	145 W
Total weight:	1875 kg	Heating capacity	225 kW
Total electric power:	15.5 kW		
Rated Voltage:	440 V / 3 N / 60 Hz /32 A		
Operational limits:	-20°C / + 35°C		

CE

$$\left(11{,}500\ \frac{m^3}{hr}\right)\left(\frac{1\ hr}{60\ min}\right)\left(35.3147\ \frac{ft^3}{m^3}\right) = 6{,}769\ \frac{ft^3}{min}$$

CH2MHILL.

Job No.
Sheet No.
Job Name
Date
Subject
Computed By
Dryer 02
Checked By

Field Verified by Mike Wintz 7-24-14 MW 2/9/2015

Rated Heat Input Capacity 2.5 MMBTU/hr

DRYER 03

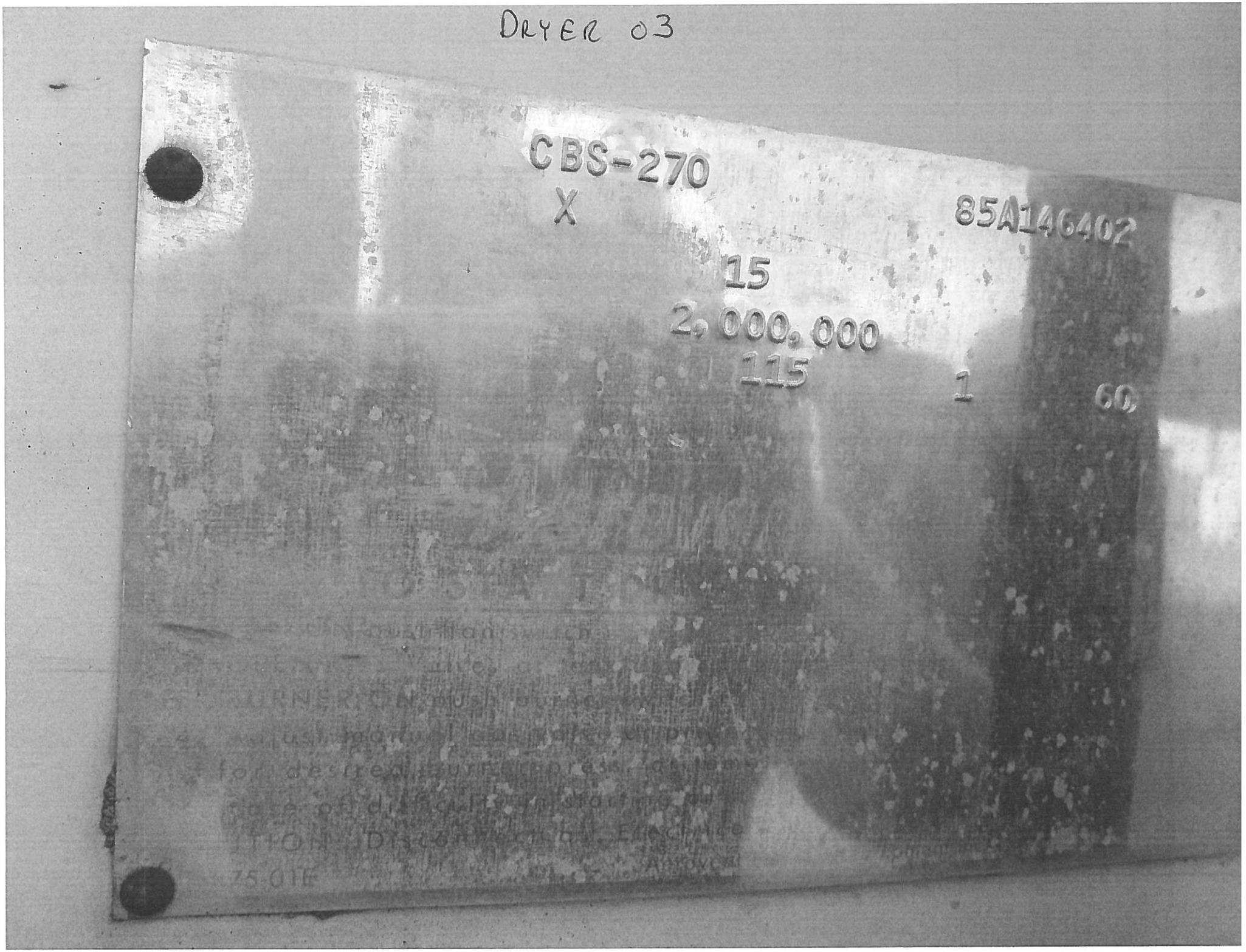

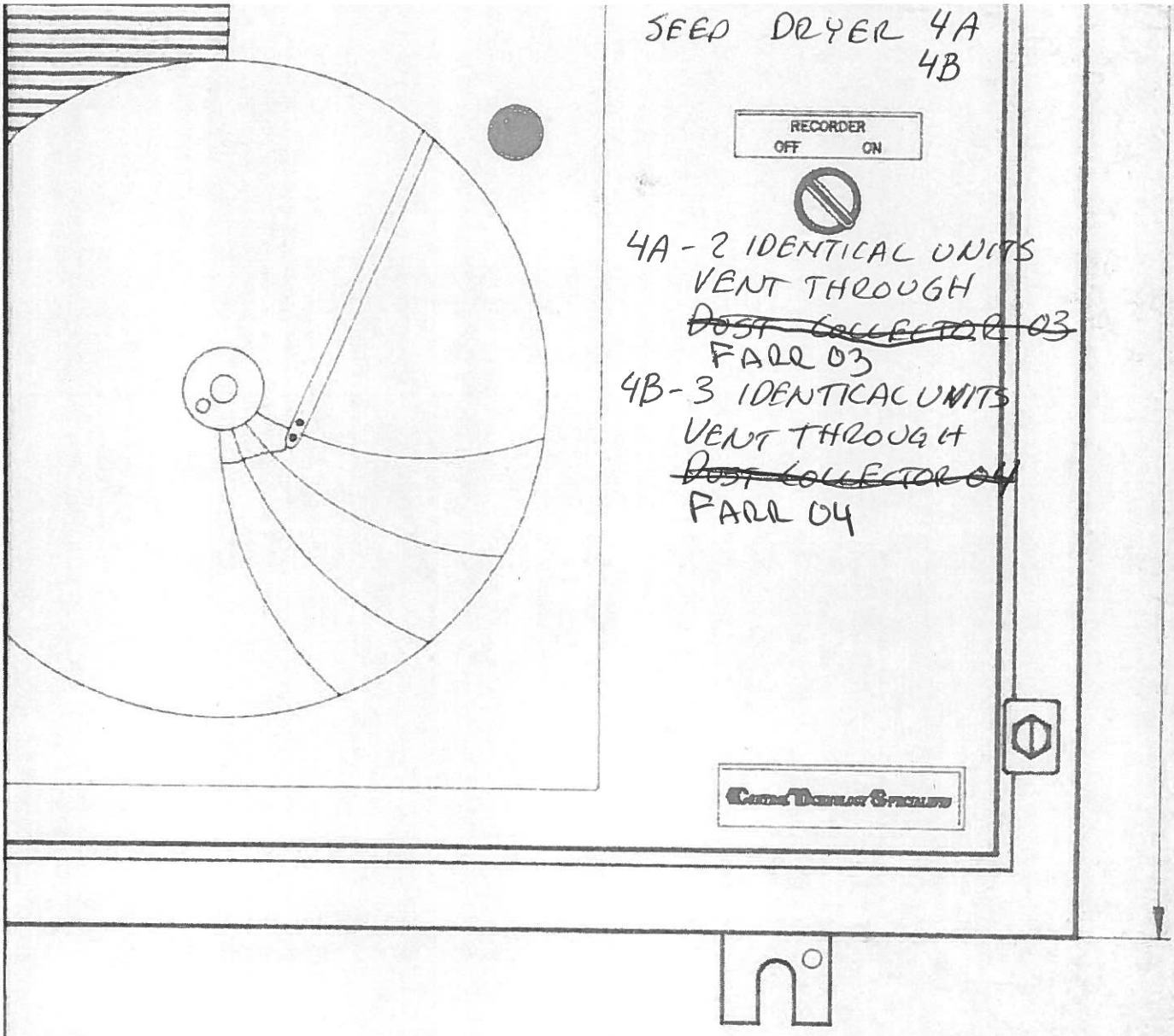

CONTROL PANEL FACE LAYOUT

(362408LP 36"H X 24"W X 8"D NEMA-12 ENCLOSURE)

CTS

y Management and Burner Management Systems

CONTROL TECHNOLOGY SPECIALISTS
4700 Northgate Blvd., Suite 160
Sacramento, CA 95834
(916) 922-9367

NG AND DESIGN ARE THE PROPERTY OF C.T.S. NEITHER THE DRAWING, ONS OF IT, NOR INFORMATION DERIVED FROM IT IS TO BE GIVEN TO HOUT WRITTEN PERMISSION. NO USE IS TO BE MADE OF IT WHICH IS

PROJECT : SEED DRYER			
CUSTOMER : DIXON "Y" MACHINE			
TITLE : BURNER CONTROL SCHEMATIC			
ENGINEERED:	HINH N.	INT:. H.N.	DATE: 06-27-94
CHECKED:	ADRIAN H.	A.H.	06-28-94
APPROVED :			11-09-94
DRAWN :	JESSE S.	JJS	06-27-94
JOB NO.	SHEET NO.	DRWG. NO.	

SEED Dryer 4A
4B

ROL PIPING DETAIL

BURNER DETAILS	
AIR VOLUME	5700 CFM
TEMPERATURE RISE	70F
BURNER CAPACITY	500,000 BTU/HR
AIR VELOCITY REQUIRED FOR 9 EQUIVALENT FT. OF BURNER	3,000 FPM
AIR PRESSURE DROP ACROSS BURNER	0.56" w.c.
LIQUID PROPANE GAS PRESSURE REQUIRED AT BURNER	2" w.c.
BURNER CAPACITY AT MINIMUM FIRE	24,000 BTU/HR
TEMPERATURE RISE AT MINIMUM FIRE	3.8F
FLAME LENGTH AT MAXIMUM FIRE	9"

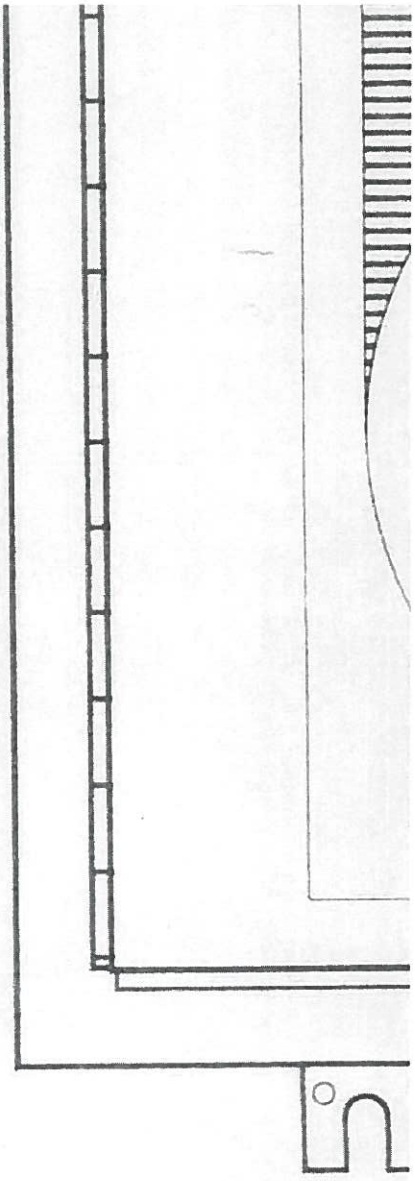

BURN
(HOFFMAN

END

NEL TERMINAL	VOLTS	120 VAC
MINAL	HZ.	60 Hz
	PH.	1ø
NEL WIRING	FLA	10 Amp

AS REQUIRED BY CODE.

HEI SERIES BAGHOUSE

CSL

CAROTHERS AND SON, LTD.
INDUSTRIAL SYSTEMS

HEI SERIES BAGHOUSE

- Exceptional Performance
- High Entry Inlet Design
- Pulse Jet Bag Cleaning
- Valves Located Inside
- Top Load and Side Load Bags Available
- Various Fabrication Materials Available:
  Carbon Steel, Stainless Steel and Aluminium
- Cometitively Priced from 5,000 CFM to 100,000 CFM
- High Temperature and Process Gas Models Available
- Cost Efficient Integral Fan Mounting Design Available

www.cslsystems.com

CAROTHERS AND SON, LTD.
P.O. Box 2709, Eugene, OR 97402

Phone: (541) 484-4270
Fax: (541) 484-5681

CAROTHERS AND SON, LTD.
INDUSTRIAL SYSTEMS

HEI SERIES BAGHOUSE

HEI FILTER | High Entry Inlet

STANDARD SPECIFICATIONS

- High Entry Inlet
- Internal Valves
- Hinged Lift Open Doors
- Pulse Jet Filter Cleaning
- Carbon Steel Construction
- Access Ladder and Top Handrail
- Variable Height Inlet*
- Top Removal Snapband Bags
- Fold Down Handles
- Bottom Access Door

OPTIONAL FEATURES

- Explosion Relief Panels
- Plug Sensors
- Alternate Bag Materials
- Alternate Construction Materials
- Alternate Surface Coatings

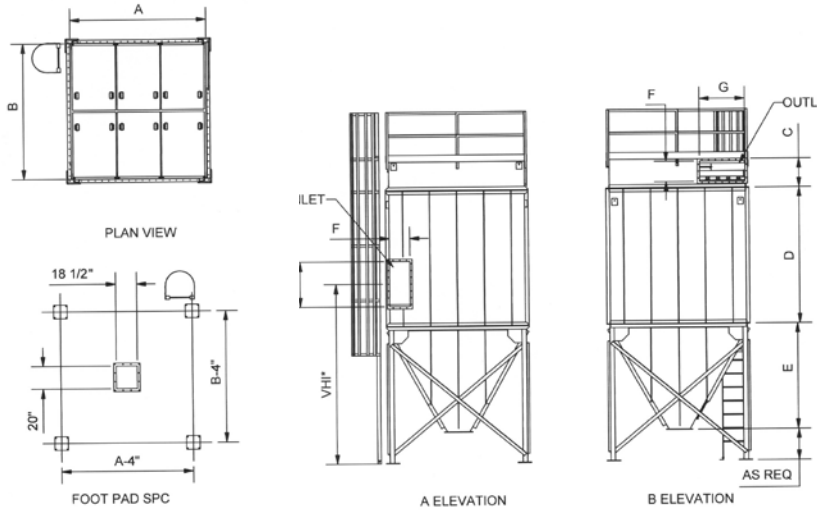

Note:
- All Dimensions are in Inches
- All Dimensions are subject to Change

FILTER MODEL	FT² OF CLOTH			DIMENSIONS						
HIGH ENTRY INLET	120" BAGS	144' BAGS	A	B	C	D(10')	D(12')	E	F	G
100 TR (10) (12) HEI	1570	1884	120	102	25	120	144	90	22	48
120 TR (10) (12) HEI	1884	2261	120	111	25	120	144	90	22	48
130 TR (10) (12) HEI	2041	2449	120	120	25	120	144	90	22	48
140 TR (10) (12) HEI	2198	2638	120	129	25	120	144	96	22	48
150 TR (10) (12) HEI	2355	2826	120	138	25	120	144	108	22	48
160 TR (10) (12) HEI	2512	3014	120	147	25	120	144	114	22	48
170 TR (10) (12) HEI	2669	3203	120	156	25	120	144	120	22	48
180 TR (10) (12) HEI	2826	3391	120	165	25	120	144	126	22	48

HEI FILTER | High Entry Inlet

STANDARD SPECIFICATIONS

- High Entry Inlet
- Internal Valves
- Hinged Lift Open Doors
- Pulse Jet Filter Cleaning
- Carbon Steel Construction
- Access Ladder and Top Handrail
- Variable Height Inlet*
- Top Removal Snapband Bags
- Fold Down Handles
- Bottom Access Door

OPTIONAL FEATURES

- Explosion Relief Panels
- Plug Sensors
- Alternate Bag Materials
- Alternate Construction Materials
- Alternate Surface Coatings

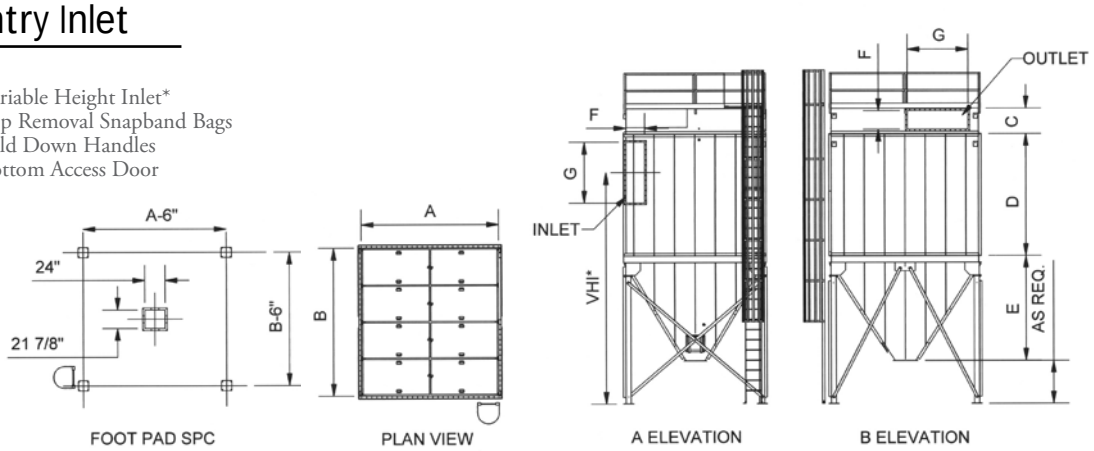

Note:
- All Dimensions are in Inches
- All Dimensions are subject to Change

FILTER MODEL	FT² OF CLOTH			DIMENSIONS						
HIGH ENTRY INLET	120" BAGS	144' BAGS	A	B	C	D(10')	D(12')	E	F	G
195 TR (10) (12) HEI	3062	3674	162	120	25	120	144	120	22	48
210 TR (10) (12) HEI	3297	3956	162	129	25	120	144	120	22	48
225 TR (10) (12) HEI	3533	4239	162	138	25	120	144	120	22	60
240 TR (10) (12) HEI	3768	4522	162	147	25	120	144	120	22	60
255 TR (10) (12) HEI	4004	4804	162	156	25	120	144	120	22	60
270 TR (10) (12) HEI	4239	5087	162	165	25	120	144	120	22	72
285 TR (10) (12) HEI	4475	5369	162	174	25	120	144	132	22	72
300 TR (10) (12) HEI	4710	5652	162	183	25	120	144	138	22	72

www.cslsystems.com

CAROTHERS AND SON, LTD.
P.O. Box 2709, Eugene, OR 97402

Phone: (541) 484-4270
Fax: (541) 484-5681

BEI SERIES BAGHOUSE

CSL

CAROTHERS AND SON, LTD.
INDUSTRIAL SYSTEMS

BEI SERIES BAGHOUSE

- Economical Hopper Entry Inlet
- Pulse Jet Bag Cleaning
- Top Load and Side Load Bags Available
- Various Fabrication Materials Available:
  Carbon Steel, Stainless Steel and Aluminium
- Competitively Priced From 500 CFM to 100,000 CFM
- High Temperature and Process Gas Models Available
- Cost Efficient Integral Fan Mounting Design Available
- Bin Vent Models Available

www.cslsystems.com

CAROTHERS AND SON, LTD.
P.O. Box 2709, Eugene, OR 97402

Phone: (541) 484-4270
Fax: (541) 484-5681

CSL
CAROTHERS AND SON, LTD.
INDUSTRIAL SYSTEMS

BEI SERIES BAGHOUSE

BEI FILTER | Bottom Entry Inlet

STANDARD FEATURES
- Bottom Removal Bags
- Pulse Jet Filter Cleaning
- 60º Hopper w/Connecting Flange
- Side Access Doors
- Carbon Steel Construction

OPTIONAL FEATURES
- High Temperature Construction
- Insulation
- Alternative construction Materials Available

Note:
- All Dimensions are in Inches
- All Dimensions are subject to Change
- "G" Dimension is round to 18"Ø; above 18"Ø, "G" becomes the width and "H" becomes height.
- Mating Flanges are available for all connections.

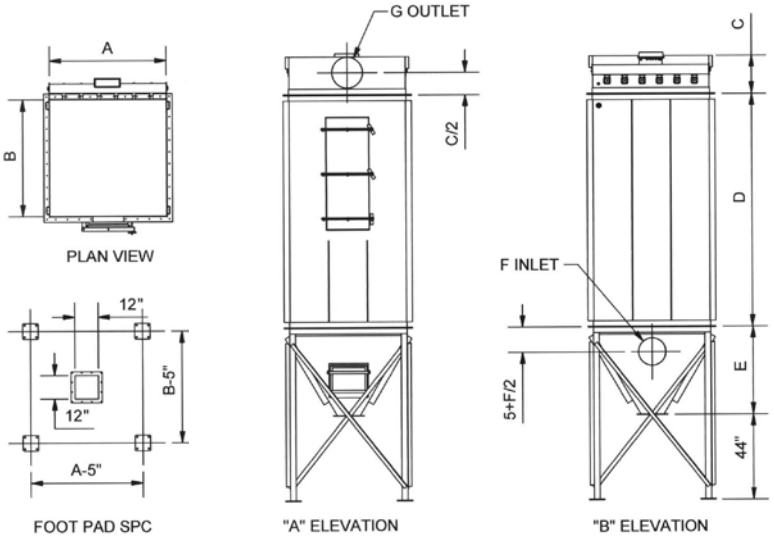

FILTER MODEL	FT² OF CLOTH			DIMENSIONS									
BOTTOM ENTRY INLET	96" BAGS	120" BAGS	144' BAGS	A	B	C	D(8')	D(10')	D(12')	E	F	G	H
25 BR (8) (10) (12) BEI	314	393	471	48	48	25	96	120	144	28	12	10	
36 BR (8) (10) (12) BEI	452	565	678	57	57	25	96	120	144	36	14	12	
49 BR (8) (10) (12) BEI	615	769	923	66	66	25	96	120	144	43	18	16	
64 BR (8) (10) (12) BEI	804	1005	1206	75	75	25	96	120	144	51	20	18	
81 BR (8) (10) (12) BEI	1017	1272	1526	84	84	25	96	120	144	59	22	22	18
100 BR (8) (10) (12) BEI	1256	1570	1884	93	93	25	96	120	144	67	24	24	18
121 BR (8) (10) (12) BEI	1520	1900	2280	102	102	25	96	120	144	74	26	26	18
144 BR (8) (10) (12) BEI	1809	2261	2713	111	111	25	96	120	144	82	30	30	18

BEI FILTER | Top Removal

STANDARD FEATURES
- Top Removal Bags
- Pulse Jet Filter Cleaning
- 60º Hopper w/Connecting Flange
- Top Hinged Access Doors
- Carbon Steel Construction

OPTIONAL FEATURES
- High Temperature Construction
- Insulation
- Alternative construction Materials Available

Note:
- All Dimensions are in Inches
- All Dimensions are subject to Change
- "G" Dimension is round to 18"Ø; above 18"Ø, "G" becomes the width and "H" becomes height.
- Mating Flanges are available for all connections.

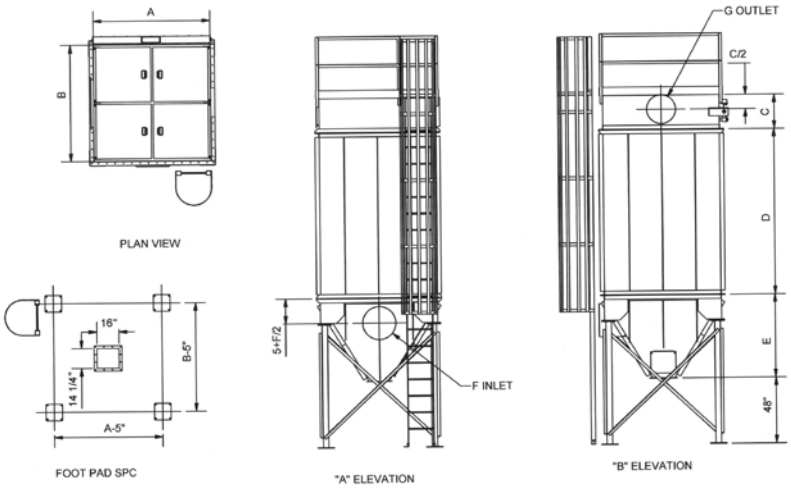

FILTER MODEL	FT² OF CLOTH			DIMENSIONS								
MEDIUM DENSITY	(8')	(10')	(12')	A	B	C	D(8')	D(10')	D(12')	E	F	G
25 TR (8) (10) (12) M	314	393	471	48	48	25	96	120	144	28	12	
36 TR (8) (10) (12) M	452	565	678	57	57	25	96	120	144	36	14	
49 TR (8) (10) (12) M	615	769	923	66	66	25	96	120	144	43	18	
64 TR (8) (10) (12) M	804	1005	1206	75	75	25	96	120	144	51	20	
81 TR (8) (10) (12) M	1017	1272	1526	84	84	25	96	120	144	59	22	18
100 TR (8) (10) (12) M	1256	1570	1884	93	93	25	96	120	144	67	24	18
121 TR (8) (10) (12) M	1520	1900	2280	102	102	25	96	120	144	74	26	18
144 TR (8) (10) (12) M	1809	2261	2713	111	111	25	96	120	144	82	30	18

CAROTHERS AND SON, LTD.
P.O. Box 2709, Eugene, OR 97402
Phone: (541) 484-4270
Fax: (541) 484-5681

CSL
CAROTHERS AND SON, LTD.
INDUSTRIAL SYSTEMS
P.O. Box 2709, Eugene, Oregon 97402

Phone: (541) 484-4270
Fax: (541) 484-5681

www.cslsystems.com

November 16th 2010

Nunhems USA, Inc.
1200 Anderson Corner Road
Parma, Idaho 83660
PH: 1-208-674-4079 office
FAX: 1-208-674-4379 fax

Attn: Project Engineers
Re: Dust Collection System Standards and Summary

To whom it may concern,

The purpose of this letter is to summarize our standards and illustrate the "Best Practice" of dust collection system design for features, function and price. These standards were recently utilized at the Nunhems USA vegetable seed processing facility in Parma Idaho. Included in this summary are the complete system specifications for that project.

Filter Design:

Carothers & Son Ltd. "CSL" Designs a specific filter for the seed cleaning industry. This filter utilizes a "High Side Inlet" (HEI). This design allows the dust laden air to come in across the sides of the filters in lieu of other manufacturers that enter through the bottom of the filters. With the CSL design, when the pulse-jet cleaning system is activated, there are no opposing forces between inlet air and cleaning air. The effect is a much more fluid cleaning cycle while in operation.

Filter Media:

CSL primary filter systems use a traditional filter bag manufactured from 16 ounce singed polyester. This filter media is very cost effective and functions well with screenings and fibrous materials. Cartridge filters are not recommended in seed cleaning processes due to the fibrous material plugging in between the cartridge pleats. 6:1 air to cloth ratios are recommended, although can operate at up to 8:1 AC. Filter bags are installed from the top clean air plenum through hinged top doors. This eliminates maintenance personnel from entering confined space, and allows the worker to avoid direct contact with the dust. A filter cage supports the filter fabric and incorporates a venturi to aid in bag cleaning.

Filter Cleaning:

CSL primary filter systems use a pulse jet cleaning mechanism. This cleaning system uses a small blast of compressed air (4 SCFM @ 90 psig) to pulse down a row of bags. The pulse is every 15 to 20 seconds using a total of approximately 16 SCFM of compressed air. The cleaning is performed on-line while the system is running. The compressed air is controlled electronically using a sequential timer that activates a solenoid valve which allows a diaphragm valve to open and close in approximately 200 milliseconds. With the CSL filters the valves are located in the clean air plenum keeping them enclosed in a warm dry environment. An added benefit to the valves being located inside is the reduced noise outside the filter and safe ease of access for the worker.

Fans:

CSL uses an airfoil wheel design for the fans in their dust collection systems. The airfoil wheel is the most energy efficient and produces the least amount of noise. CSL mounts the fan wheel directly to the motor shaft, referred to as arrangement 4. This eliminates additional bearings and a belt drive. The load to the motor shaft is subsequently less than a belt drive, having no belt pull. The other added benefit is there is no drive loss (typically 5%). The fan uses a inlet vane control damper for flow adjustment while not effecting system pressure.

System Noise Reduction:

When system fan discharge noise is an issue, CSL utilizes their unique fan discharge silencer. These units are designed with a perforated interior and an internal perforated "Bullet". The bullet directs the sound waves perpendicular to the air flow into high density mineral wool insulation that is between the perforated interior and the housing. A single silencer reduces the sound decibels by half. The case study utilized at Nunhems USA in Parma Idaho, the fan operated without the silencer and the sound level was at 97 dBA. With one silencer the sound level was reduced to 85 dBA. Upon adding an additional silencer, the sound level was reduced to 74 dBA.

Ductwork:

CSL uses flanged, slip fit and quick lock ductwork within the system design.
Main trunk sections 36"Ø and larger use angle ring flanges with sprirolock straight duct runs and fabricated transitions and elbows. Gages range from 12 to 16 gage.
34"Ø to 14"Ø use slip fit connections with "TEK" screw connections and silicone seals. Gages range from 16 to 18 gage. 12"Ø to 3"Ø use quick lock connections with smooth wall straight duct runs. Gages range from 20 to 22 gage.

Spark Detection and Abort Gates:

When returning the air back into the building from a dust collection system, the collected dust MUST be checked for flammability and explosibility. In the event that the dust proves to be hazardous, spark detection and abort gates must be used.
The spark detection system uses infrared sensors to detect a spark. This activates an abort gate to close and exhaust the dust collection air to atmosphere outside the building. This protects the building and workers inside the building and shuts off the system to prevent further damage.

The following equipment and components make up the recent Nunhems USA dust collection system:

ITEM NO. 1: PRIMARY FILTER SYSTEMS "DC1, DC2, DC3 & DC6" (4) REQ.

CSL 300TR12HEI Primary Filter

Specifications:

- (300) 6"Ø by 144.5" long filter bags, 5,700 FT^2 of 16 OZ polyester.
- Reverse jet cleaning mechanism will incorporate the use of a 5" internal compressed air header. Valves and solenoids are located inside the filter top plenum to provide excellent access and protection from outside temperatures. 20-30 SCFM @ 90-100 PSIG is required to be supplied and connected by customer.
- Removable diaphragm valves will be activated by electric pilot valves in turn activated by a 120 volt adjustable solid state sequential timer which is shipped loose for customer wiring.
- Top loaded tool free bag and cage removal through hinged lift open top doors. This prevents confined space and aid in maintenance down time eliminating the need to remove several bags to replace one.
- Magnehelic pressure gauge will be included for indication of bag permeability.
- High side inlet is specially designed for extended filter bag life.
- Plenum, Housing and hopper construction will be of 10 GA plate carbon steel. Tubesheet is constructed of 7 GA plate with structural steel reinforcing for system pressure.
- Support legs included for 5' vertical clearance below hopper opening.
- Exterior will be of SP-2 shop finish with enamel paint.

ITEM NO. 2: PRIMARY FAN SYSTEMS "DC1, DC2, DC3 & DC6" (4) REQ.

CBC SIZE 36½ DESIGN 10 SW CENTRIFUGAL FAN

Specifications:

- "DC1"- 34,900 CFM @ 16" SP, 70º F, sea level.
- "DC2"- 34,900 CFM @ 16" SP, 70º F, sea level.
- "DC3"- 35,000 CFM @ 16" SP, 70º F, sea level.
- "DC6"- 32,500 CFM @ 16" SP, 70º F, sea level.
- 1,780 RPM, 115 BHP @ 0.075 lb./FT^3 density.
- 125 HP TEFC 1,800 RPM 3/60/460v motor.
- Arrangement 4 constant speed direct drive.
- Inlet vane control damper for volume adjustment.
- Heavy-duty carbon steel construction throughout.

ITEM NO. 3: PRIMARY FILTER SYSTEM "DC4" (1) REQ.

CSL 110TR12HEI Primary Filter

Specifications:

- (110) 6"Ø by 144.5" long filter bags, 2,090 FT^2 of 16 OZ polyester.
- Reverse jet cleaning mechanism will incorporate the use of a 5" internal compressed air header. Valves and solenoids are located inside the filter top plenum to provide excellent access and protection from outside temperatures. 20-30 SCFM @ 90-100 PSIG is required to be supplied and connected by customer.
- Removable diaphragm valves will be activated by electric pilot valves in turn activated by a 120 volt adjustable solid state sequential timer which is shipped loose for customer wiring.
- Top loaded tool free bag and cage removal through hinged lift open top doors. This prevents confined space and aid in maintenance down time eliminating the need to remove several bags to replace one.
- Magnehelic pressure gauge will be included for indication of bag permeability.
- High side inlet is specially designed for extended filter bag life.
- Plenum, Housing and hopper construction will be of 12 GA plate carbon steel. Tube sheet is constructed of 10 GA plate with structural steel reinforcing for system pressure.
- Support legs included for 5' vertical clearance below hopper opening.
- Exterior will be of SP-2 shop finish with enamel paint.

ITEM NO. 4: PRIMARY FAN SYSTEM "DC4" (1) REQ.

CBC SIZE 3300 DESIGN 1904 SW CENTRIFUGAL FAN

Specifications:

- "DC4"- 12,800 CFM @ 18" SP, 70º F, sea level.
- 1,780 RPM, 47 BHP @ 0.075 lb./FT^3 density.
- 50 HP TEFC 1,800 RPM 3/60/460v motor.
- Arrangement 4 constant speed direct drive.
- Inlet vane control damper for volume adjustment.
- Heavy-duty carbon steel construction throughout.

ITEM NO. 5: PRIMARY FILTER SYSTEM "DC5" (1) REQ.

CSL 130TR12HEI Primary Filter

Specifications:

- (130) 6"Ø by 144.5" long filter bags, 2,470 FT^2 of 16 OZ polyester.
- Reverse jet cleaning mechanism will incorporate the use of a 5" internal compressed air header. Valves and solenoids are located inside the filter top plenum to provide excellent access and protection from outside temperatures. 20-30 SCFM @ 90-100 PSIG is required to be supplied and connected by customer.
- Removable diaphragm valves will be activated by electric pilot valves in turn activated by a 120 volt adjustable solid state sequential timer which is shipped loose for customer wiring.
- Top loaded tool free bag and cage removal through hinged lift open top doors. This prevents confined space and aid in maintenance down time eliminating the need to remove several bags to replace one.
- Magnehelic pressure gauge will be included for indication of bag permeability.
- High side inlet is specially designed for extended filter bag life.
- Plenum, Housing and hopper construction will be of 12 GA plate carbon steel. Tube sheet is constructed of 10 GA plate with structural steel reinforcing for system pressure.
- Support legs included for 5' vertical clearance below hopper opening.
- Exterior will be of SP-2 shop finish with enamel paint.

ITEM NO. 6: PRIMARY FAN SYSTEM "DC5" (1) REQ.

CBC SIZE 36½ DESIGN 1903 SW CENTRIFUGAL FAN

Specifications:

- 20,000 CFM @ 13" SP, 70º F, sea level.
- 1,780 RPM, 50 BHP @ 0.075 lb./FT^3 density.
- 60 HP TEFC 1,800 RPM 3/60/460v motor.
- Arrangement 4 constant speed direct drive.
- Inlet vane control damper for volume adjustment.
- Heavy-duty carbon steel construction throughout.

ITEM NO. 7: PRIMARY FILTER SYSTEM "DC7" (1) REQ.

CSL 64TR10HEI Primary Filter

Specifications:

- (64) 6"Ø by 120.5" long filter bags, 1,216 FT^2 of 16 OZ polyester.
- Reverse jet cleaning mechanism will incorporate the use of a 5" internal compressed air header. Valves and solenoids are located inside the filter top plenum to provide excellent access and protection from outside temperatures. 20-30 SCFM @ 90-100 PSIG is required to be supplied and connected by customer.
- Removable diaphragm valves will be activated by electric pilot valves in turn activated by a 120 volt adjustable solid state sequential timer which is shipped loose for customer wiring.
- Top loaded tool free bag and cage removal through hinged lift open top doors. This prevents confined space and aid in maintenance down time eliminating the need to remove several bags to replace one.
- Magnehelic pressure gauge will be included for indication of bag permeability.
- High side inlet is specially designed for extended filter bag life.
- Plenum, Housing and hopper construction will be of 12 GA plate carbon steel. Tube sheet is constructed of 10 GA plate with structural steel reinforcing for system pressure.
- Support legs included for 5' vertical clearance below hopper opening.
- Exterior will be of SP-2 shop finish with enamel paint.

ITEM NO. 8: PRIMARY FAN SYSTEM "DC7" (1) REQ.

CBC SIZE 2000 DESIGN 1903 CENTRIFUGAL FAN

Specifications:

- "DC7"- 6,800 CFM @ 19" SP, 70º F, sea level.
- 3,450 RPM, 24 BHP @ 0.075 lb./FT^3 density.
- 30 HP TEFC 3,500 RPM 3/60/460v motor.
- Arrangement 4 constant speed direct drive.
- Inlet vane control damper for volume adjustment.
- Heavy-duty carbon steel construction throughout.

ITEM NO. 9: PRIMARY FILTER SYSTEM "DC8" (1) REQ.

CSL 225TR12HEI Primary Filter

Specifications:

- (225) 6"Ø by 144.5" long filter bags, 4,275 FT^2 of 16 OZ polyester.
- Reverse jet cleaning mechanism will incorporate the use of a 5" internal compressed air header. Valves and solenoids are located inside the filter top plenum to provide excellent access and protection from outside temperatures. 20-30 SCFM @ 90-100 PSIG is required to be supplied and connected by customer.
- Removable diaphragm valves will be activated by electric pilot valves in turn activated by a 120 volt adjustable solid state sequential timer which is shipped loose for customer wiring.
- Top loaded tool free bag and cage removal through hinged lift open top doors. This prevents confined space and aid in maintenance down time eliminating the need to remove several bags to replace one.
- Magnehelic pressure gauge will be included for indication of bag permeability.
- High side inlet is specially designed for extended filter bag life.
- Plenum, Housing and hopper construction will be of 12 GA plate carbon steel. Tubesheet is constructed of 10 GA plate with structural steel reinforcing for system pressure.
- Support legs included for 5' vertical clearance below hopper opening.
- Exterior will be of SP-2 shop finish with enamel paint.

ITEM NO. 10: PRIMARY FAN SYSTEM "DC8" (1) REQ.

CBC SIZE 36½ DESIGN 1904 SW CENTRIFUGAL FAN

Specifications:

- "DC8"- 25,000 CFM @ 16" SP, 70º F, sea level.
- 1,780 RPM, 88 BHP @ 0.075 lb./FT^3 density.
- 100 HP TEFC 1,800 RPM 3/60/460v motor.
- Arrangement 4 constant speed direct drive.
- Inlet vane control damper for volume adjustment.
- Heavy-duty carbon steel construction throughout.

ITEM NO. 11: AUGER/AIRLOCK "DC1, 2, 3, 5 & 6 (5) REQ.

RAL-10X10-SCR-9-1.5HP ROTARY AIRLOCK DISCHARGER

Specifications:

- .75 CFR @ 20 RPM for 15 FT^3/Min. capacities.
- Cast iron housing with carbon steel open-end rotor.
- 1 ½ HP slave driven common drive gear reducer.
- Standard helical discharge screw auger for filter surge unloading.

TEM NO. 12: ROTARY AIRLOCK "DC4 & DC8 (2) REQ.

RAL-10X10-.5HP

Specifications:

- 10" inlet with square connection flange.
- Cast iron housing with A36 carbon steel rotor (relieved tips).
- ½ HP TEFC motor with right angle gearbox and chain final drive.
- Safety guards to enclose chain drive.

ITEM NO. 13: DISCHARGE AIRLOCK "DC7" (1) REQ.

CSL FT24-3HP ROTARY AIRLOCK DISCHARGER

Specifications:

- 5.7 CFR @ 35 RPM for 100 FT^3/Min. capacity @ 50% loading
- A36 carbon steel housing with carbon steel open-end rotor
- 5 HP drive gear reducer.

EXTERIOR AND INTERIOR DUCTWORK

ITEM NO. 14: SYSTEM DUCTWORK (1) LOT REQ.

CSL HD-A36CS-DUCTWORK

Specifications:

- Exterior systems "DC1,2,3,4,5,6,7 & 8"
- Exterior ductwork connections include from building wall to the collector, from the collector to the fan and from the fan to the building wall.
- Includes all systems return air perforated duct.
- Interior main trunks are 16-18 gauges Spiro-lock with 12-16 gauge elbows and transitions.
- Interior machine branches and riser ducts are "Quick Connect" ductwork with clamps and adjustable ducts.
- Includes all rigid hangers with seismic bracing.
- Includes wall flashing.

PNEUMATIC CONVEYING SYSTEMS

ITEM NO. 15: RELAY BLOWERS (3) REQ.

CSL PD-5M-15HP-PACK

Specifications:

- 465 ACFM, @ 4.0PSIG
- Sutorbilt California series 5M positive displacement blower.
- Premium quality horizontal mounted Stoddard inlet and discharge silencers.
- Oversized Stoddard in-line air filter inlet
- 15HP TEFC motor with constant speed belt drive
- Safety belt guard
- Pressure relief valve

ITEM NO. 16: RELAY BLOWER PIPING (3) LOTS REQ.

CSL-A36-PTB-4.0-11GA-A36

Specifications:

- A36 CS 4"Ø EW Tubing, 11 GA.
- (3) Bolt HP Couplings every 20' and at transitions.
- Includes 36" CLR A36 CS elbow sweeps.
- Includes airlock tee-injectors for each airlock discharge.
- Includes "Dump Station" inside the building.

ITEM NO. 17: HIGH SPEED ABORT GATE

CSL ABT-HS ABORT GATE

Specifications:

- (1) Abort gate required for each baghouse.
- High speed electronically activated electromagnet release.
- 120 VAC limit switch indicator.
- 120 VAC input with DC rectifier.
- Chrome plated magnet plate.
- Replaceable bubble gasket atmosphere top seal.
- Zero clearance replaceable crush seal.
- Pre-loaded anti-recoil spring.
- HD SCM style (4) bolt flange bearings.
- A36 carbon steel construction.

FARR APC
Air Pollution Control

POLYTECH MEDIA GRAVIMETRIC EFFICIENCY

PARTICLE SIZE MICRONS	UPSTREAM AVERAGE COUNT	DOWNSTREAM AVERAGE COUNT	PARTICLE SIZE EFFICIENCY
0.3 - 0.4	400816	30	99.993%
0.4 - 0.5	269616	4	99.999%
0.5 - 0.6	147600	1	100.000%
0.6 - 0.8	171872	0	100.000%
0.8 - 1.0	67371	1	99.999%
1.0 - 1.5	88101	0	100.000%
1.5 - 2.0	32078	0	100.000%
2.0 - 3.0	20467	0	100.000%

GRAV.CONC. MG/CU.M GR/CU.FT	6300.00 2.75	0.0032 0.0000	OVERALL GRAVIMETRIC EFFICIENCY: 99.9994%

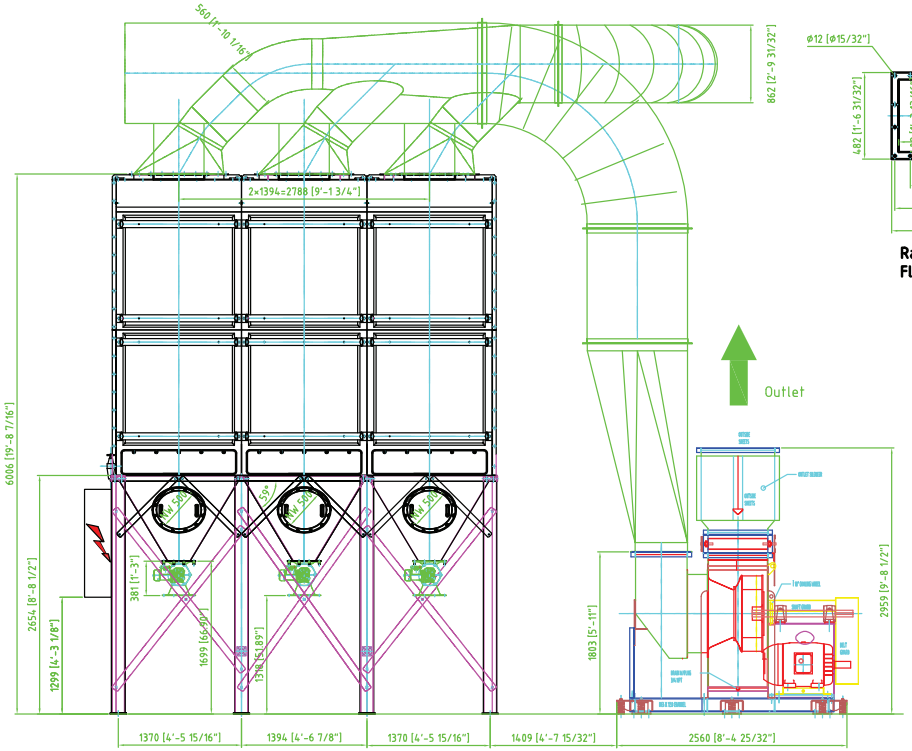

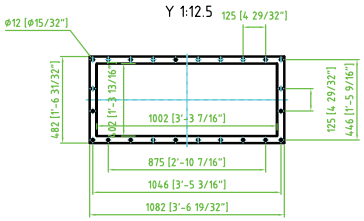

Raw Gas Flange Pattern

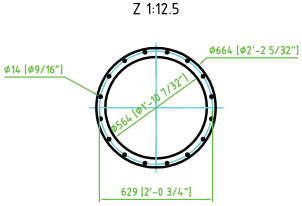

Clean Gas Flange Pattern

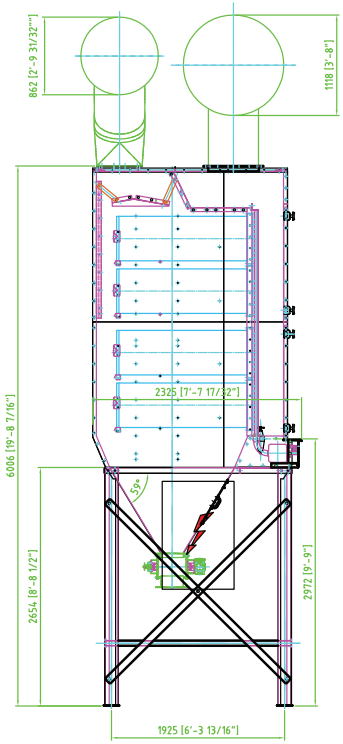

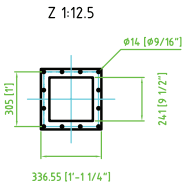

Flange Pattern Rotary Valve

Fan Details
Weight (Appr.): 4108 lbs
SP in inches: 16
(for further details see fan data sheet)

Filter Unit Details
Weight (appr.) 6000 kg (13,200 lbs)
Operation Pressure +/- 0,1 bar
Operation Temperature: max. 50°C
Outside Installation
3× NW 560 nach DIN 24154-R2
3× NW 1000x400 nach DIN 24193-R2
Electrical Panel in Pos. ?????
Air Regulator in Pos. B
Paint Color: RAL 2004 (Orange)

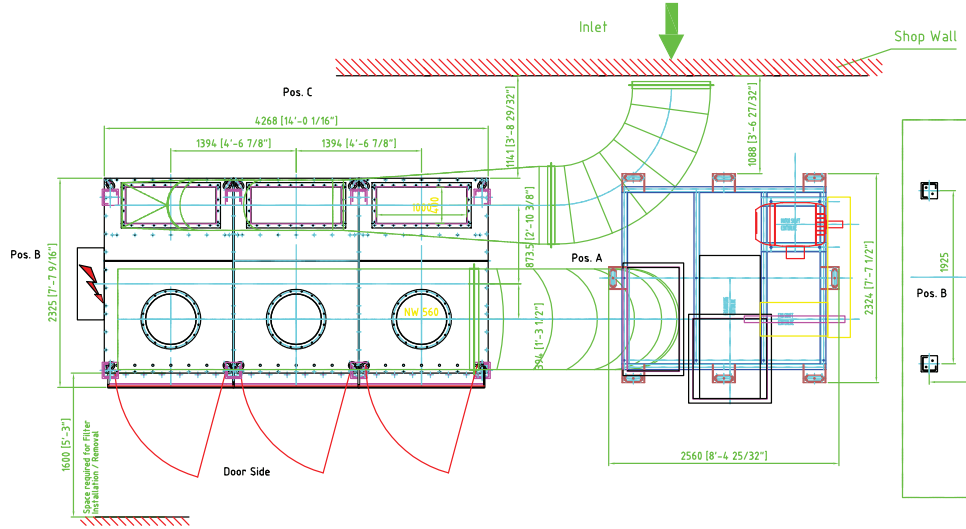

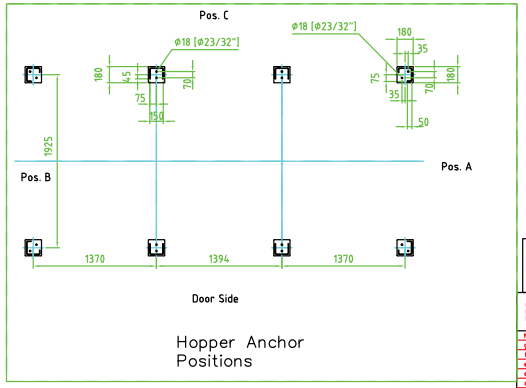

Hopper Anchor Positions

CERTIFIED DRAWING

Für diese Zeichnung behalten wir uns die Rechte nach DIN 34			Allgemeinheiten	Maßstab: 1:25	Gewicht: Unterg.
				Werkstoff:	
				Rohhol:	
h			Datum / Name		
g			Bearb. 12.06.2006 B. Kopczyk	HERDING - Filteranlage	
f			Gepr.		
e			Norm	DELTASys 1500-144/9 GZA	
d					
c					
b				1530505	Blatt 1
a					1 Bl.
Zust.	Änderung	Datum	Name	August-Dorsch-Str. 3, D-92224 Amberg Tel.:09621/430-0	

Elektronisch weitergeleitete Daten dürfen nur mit schriftlicher Genehmigung des Urhebers geändert werden!

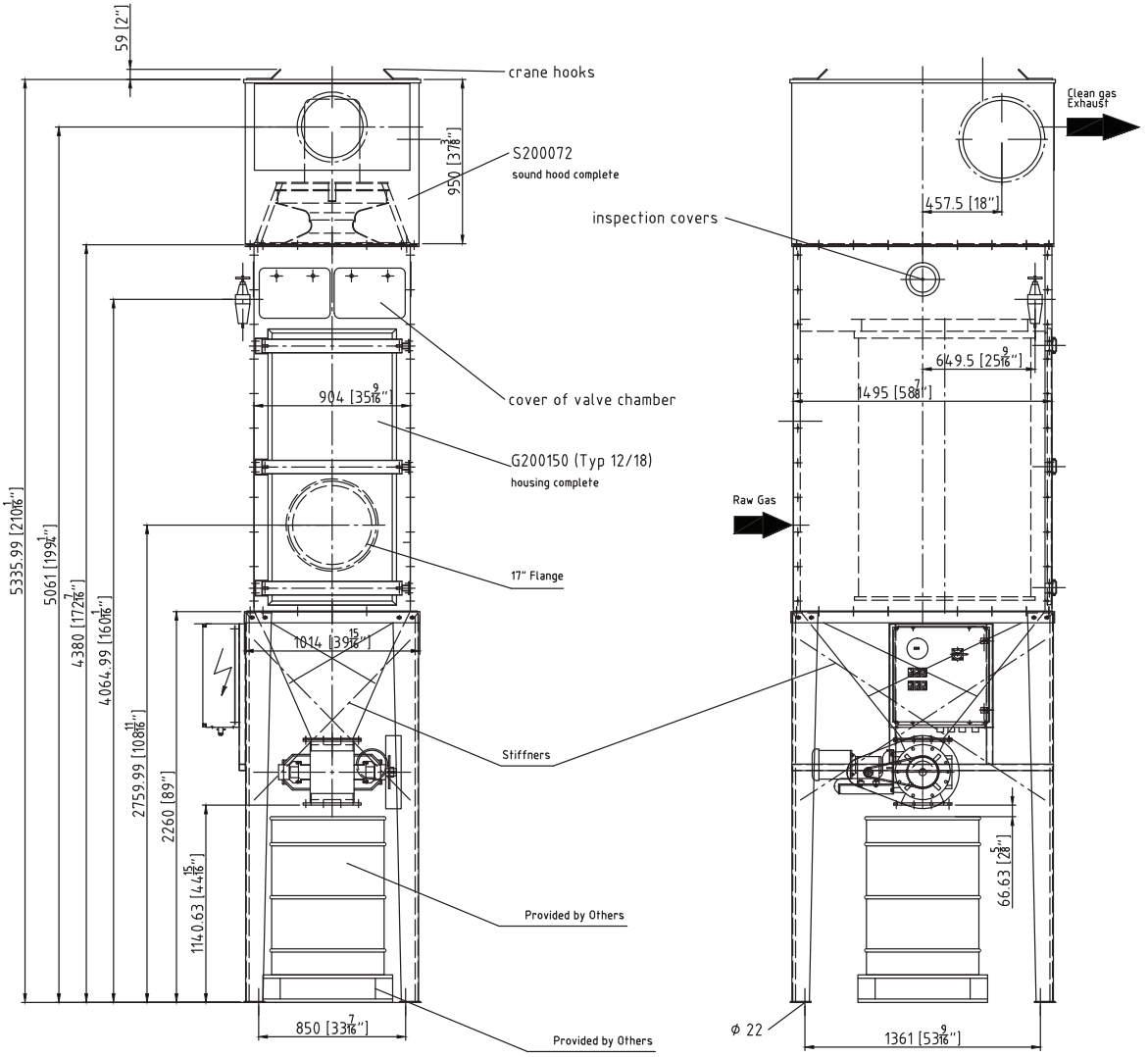

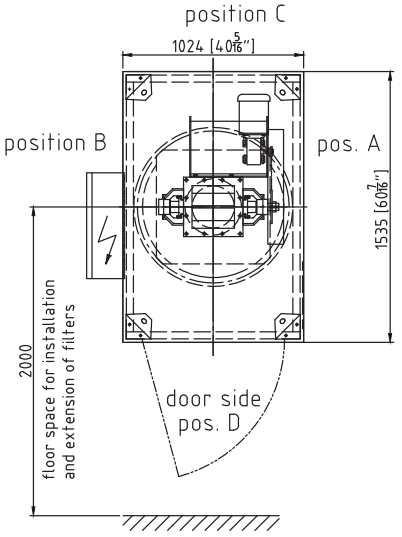

P-1899

REQUIRED INFORMATION

1. CLEAN AIR OUTLET POS D
2. COMPRESSED AIR HOOK UP - POS B
3. ELECTRIC PANEL POS B
4. PAINT COLOR ORANGE

weight (max.) 1450 kg

operating pressure: -0,1 / +0,1 bar

CERTIFIED DRAWING

Für diese Zeichnung behalten wir uns die Rechte nach DIN 34				Allgemeintoleranzen			Maßstab: 1:25 / Gewicht: / Umfang:
							Werkstoff: / Rohteil:
h					Datum	Name	
g				Bearb.			HERDING-Filter unit
f				Gepr.			Typ HSL 1500-8-12/18 SZ
e				Norm			
d							
c				Herding FILTERTECHNIK			P-1899
b							Blatt A3 h
a				August-Barsig-Str. 3, D-92224 Amberg			Bl.
Zust	Mitteilung	Datum	Name	Tel.:09621/630-0			

Elektronisch weitergeleitete Daten dürfen nur mit schriftlicher Genehmigung des Urhebers geändert werden !

camfil FARR

AIR POLLUTION CONTROL

GOLD SERIES®

Clean Air Solutions

The Remembering Tree

Created by Kelly Stevens, artist and Gold Series® production welder, this metal sculpture stands 30 feet (9.2 meters) tall in front of the Jonesboro, AR, USA factory.

A Vision of Sustainability

This artistic sculpture represents Camfil Farr APC's dedication to the environment, our employees, customers, vendors, stakeholders, and to the future of cleaning up factories around the world.

Cleaning up the workplace, for today… and tomorrow.

Saving energy and increasing production efficiency while controlling indoor air quality is a challenging aspect of plant management. Dust collectors–whether used for pollution control or product recovery–can impact all these areas. Camfil Farr APC can help solve your dust problems.

camfilcairing

Getting Greener

Camfil Farr adheres to the values and principles of sustainable development and has established an organization to develop and maintain sustainable business practices. Here I would like to mention our new initiative for sustainability, "Camfilcaring", which is basically a way of packaging all our industry-leading green initiatives into a comprehensive program that we are launching globally within Camfil Farr. We believe firmly in being a sustainable supplier. We also believe it will be a requirement for the future. We aim to be the best in sustainability. It will not require a major effort – green is in our genes.

Alan O'Connell

President and CEO
Camfil Farr

Mission Statement

- **We will** clean dust and fumes from factories, making them safer and more productive.
- **We will** ship collectors fast while still giving the customer what they want.
- **We will** be the most customer and rep friendly company in the air pollution control business.
- **We will** make the best dust collector in the business from an end user operation and maintenance viewpoint.

Green Your Factory

Our goal at Camfil Farr APC is to be green, starting with the environmental benefits of our products. We help our customers go green by stopping thousands of different pollutants from entering the workspace air and the outside air. We also build our equipment to last, so less waste is created over time. Our HemiPleat technology has revolutionized the air pollution control industry by delivering very high efficiency in a filter that lasts twice as long as competitive products. It contributes to sustainability while saving energy. Even the paint on our Gold Series collectors is green, and not just the color: We use an environmentally friendly powder painting process so no VOCs are emitted. Furthermore, premium efficiency motors are standard on the fans we supply. We are constantly launching green initiatives.

We look forward to working with you to "green" your factory.

Lee Morgan

President
Camfil Farr Air Pollution Control

Gold Series® Collectors Come With a 12 Year Warranty

Camfil Farr APC guarantees our dust collectors to meet applicable local, state and federal emission control standards. Whether exhausting outside (EPA compliance) or recirculating (OSHA compliance), Camfil Farr APC can solve your dust problems.

HEMIPLEAT®
SAVING YOU MONEY

The HemiPleat® will improve the performance of any cartridge dust collector…***guaranteed.***

Power up your dust collector with HemiPleat! This statement comes from the fact that with lower pressure drop HemiPleat filters, you can pull more air with less energy, thus capturing pollutants better. Filtration efficiencies exceed 99.99% at 0.5 micron size particles. The air coming out of a Gold Series dust collector with HemiPleat filters has been tested to exceed the air quality required in most hospital operating rooms!

GOLD CONE® FILTER TECHNOLOGY INSIDE

Gold Cone Filter

The patented Gold Cone filter has allowed many facilities to reduce the number of filters they have to use and change. The innovative cone of filter media expands the usable area of the filter allowing a reduction in the number of filters by at least a third. The design has also led to long filter life with low pressure drop.

DURAPleat
The **MOST** Durable Filter Media.

The ultimate in a green filter! The DuraPleat is fully washable and reusable. We have customers that have 5-year-old DuraPleat filters and counting. This all synthetic filter handles the most rigorous applications and temperatures.

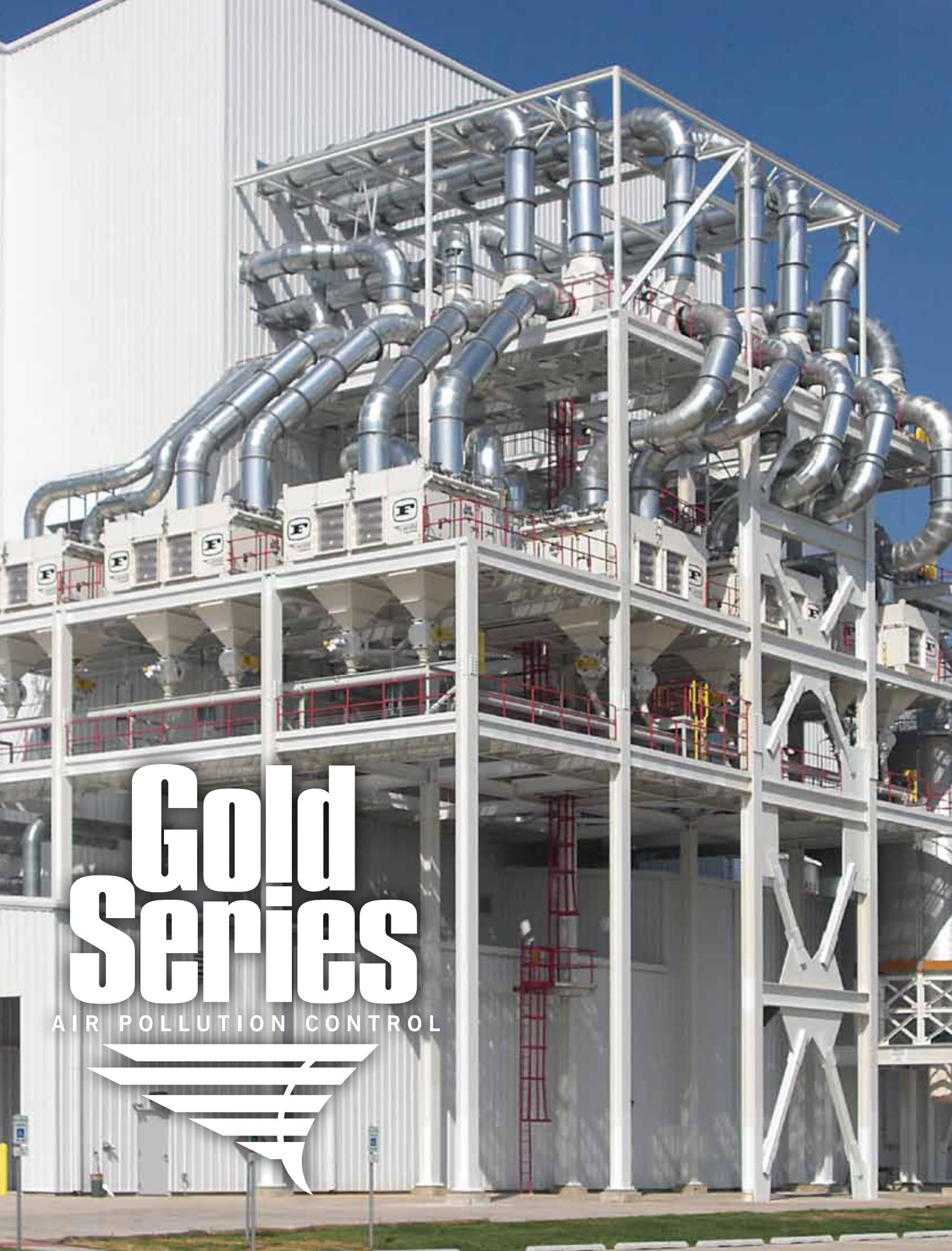

Gold Series

AIR POLLUTION CONTROL

Everything makes dust...

Ship abrasive blasting

Scan to see more Gold Series® installations.

Pharmaceutical dust

Indoor flameless explosion venting

Paper dust with return air abort gate

Typical Applications:

- Abrasive Blasting
- Chemical Processing
- Fiberglass/Composites
- Foundry
- Grinding
- Mining
- Nuisance Dust Ventilation
- Paper Scrap Systems
- Pharmaceutical
- Plasma/Laser Cutting
- Powder/Bulk Materials
- Powder Painting/Pigments
- Seed Processing
- Shot Peening
- Thermal Spray
- Welding Smoke/Fume
- Wood Processing

Pharmaceutical dust with bag-in bag-out (BIBO) door

Bronze foundry

Wood dust

The Gold Series® cleans it up

Superior performance features with exceptional ease of installation and service make the Gold Series the ultimate choice for a clean workplace.

Ore crusher at major copper mine

Thermal spray with integrated HEPA and vertical x-venting

Thermal Spray with spark trap module

Weld smoke ventilation

Pharmaceutical dust

Gold Series with HEPA integrated Safety Monitoring Filter (iSMF)

Paper shredding/recycling

Grinding thermal spray coatings

Have a sparkling day!

GS48 on plasma cutting with skirting

Any color you want!

Tunnel mining skid package

OEM laser cutting fume

Ore storage bin vent

The Heart of the Gold Series®

HEMIPLEAT®
SAVING YOU MONEY

The Most Advanced Dust Collector Filter Ever Made

- Poly-Tech™ media's filtration efficiency is 99.99% on 0.5 µm and larger particles.
- The Gold Series® meets the 5 mg/m³ or less emissions requirement to recirculate air back on non-hazardous dusts, in most cases.

The HemiPleat cartridge uses optimal pleat spacing with synthetic glue beads to hold the pleats open. HemiPleat breathes more air with less energy and increases the cleaning effectiveness of the reverse pulse, thus resulting in a lower pressure drop.

HemiPleat Green - proprietary blend of cellulose and polyester fibers with a moisture resistant silicone treatment
HemiPleat Flame Retardant - proprietary blend of cellulose and polyester fibers with a flame retardant treatment
HemiPleat Carbon Impregnated - proprietary blend of cellulose and polyester fibers impregnated with carbon for static dissipation
HemiPleat Synthetic - 100% synthetic filter media for washability and moisture resistance over cellulose.

Scan to learn more about HemiPleat.

Gold Cone Double Seal Urethane Gasket

Gold Cone® Cartridge

- Vertically mounted to shed dust readily for efficient cleaning and longer service life.
- Features a cone in the center of the cartridge, expanding the usable media in the filter by 25%.
- Test results indicate that this new pulse distribution method provides enhanced cleaning.
- More efficient operation, longer cartridge life and reduced service requirements.

HEMIPLEAT® eXTREME eX

The HemiPleat eXtreme filter is the ultimate in dust collection filtration, bringing home the highest degree of efficiency and filter life on the market. The HemiPleat eXtreme uses our proven HemiPleat technology and base media with proprietary nano fibers applied to the media surface for extreme results. These nanofibers can be applied to any of our base medias above.

Cellulose Polyester Blend

Cellulose Polyester Blend with eXtreme coating

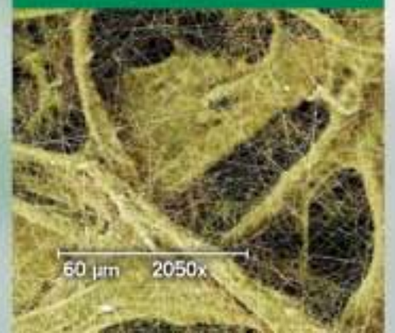

New Technology

Old Technology

The HemiPleat's high quality uniform pleat pack establishes the superiority of this cartridge over all other products in the market. The difference in pleating quality can be seen here in a comparison against the media pack with typical industry pleats. Notice the difference in pleat spacing and alignment.

<open&shut>
case

HEMIPLEAT® Patent # US 7,722,699 B2

Gold Series
AIR POLLUTION CONTROL
Looks Like a Safe Because It's
BUILT LIKE A SAFE
NEED TO RE-ORDER
www.camfilfarrapc.com
800-479-6801
Gold Series
AIR POLLUTION CONTROL
Looks Like a Safe Because It's
BUILT LIKE A SAFE
NEED TO RE-ORDER
www.camfilfarrapc.com
800-479-6801

Easy Filter Change-out

Scan to watch filter change-out video

Gold Series offers modular design for optimum flexibility–delivered fast!

"We are very happy with the Camfil Farr APC Dust Collector. The dust collection solution was purchased for our CNC plasma cutter to replace a horizontal cartridge dust collector due to short filter life. The current filters have been in for over a year and still look great and are operating on less than 3" pressure drop. Also, the Camfil Farr APC people have been a pleasure to do business with."

— Dan Schuler, Schuler Manufacturing

High Entry Inlet
Cross flow is created through the filters. Eliminates upward "can" velocities associated with traditional hopper inlets.

Gold Series® Features

- Modular design for optimum flexibility–have it your way fast!
- Each module accommodates airflows up to 5,000 cfm
- Module constructed of 7 gauge carbon steel
- Door, hopper, inlet and panels are all 10 gauge steel
- Powder painted for unsurpassed corrosion resistance
- Component configurations are virtually unlimited
- Vertical design of cartridges enables efficient pulse cleaning of dust

Powerful Cleaning System to Provide Long Filter Life

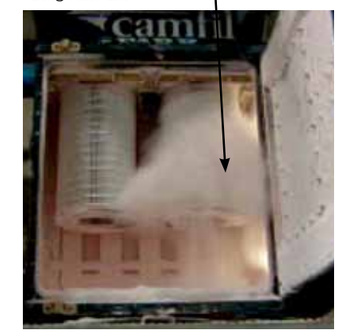

Pulse Discharge of Gold Cone Filter

Scan to watch filter pulse video.

Individually Powder Coated
Gold Series components are individually powder coated prior to assembly for superior corrosion resistance.

Looks Like a Safe Because It's Built Like a Safe

Gold Series® Hopper Options

Low Boy

Low Pro

Standard

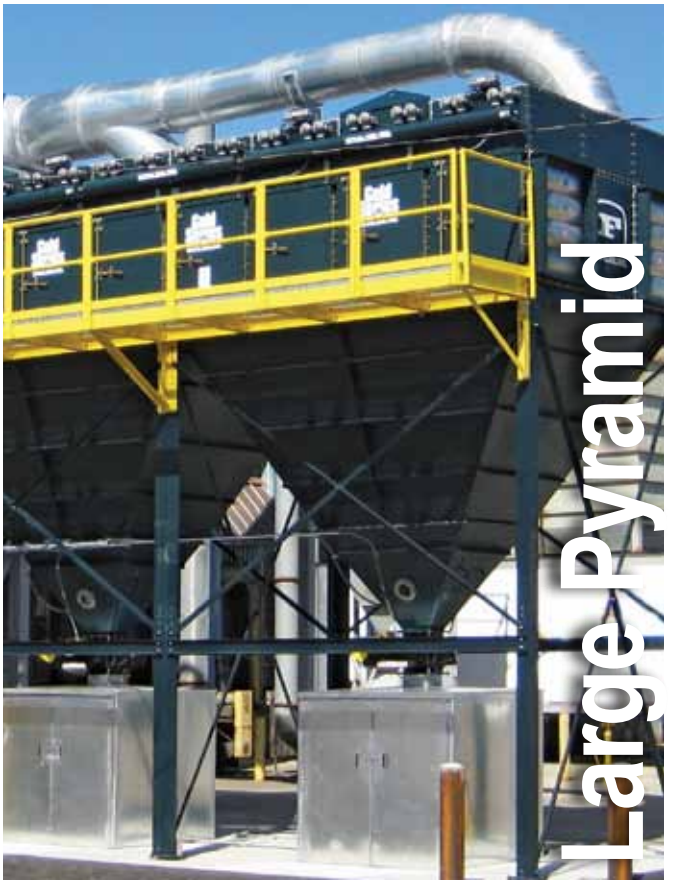

Large Pyramid

Other hopper options available include drawer kit, trough hopper with screw conveyor, and continuous liner discharge.

Gold Series® Models

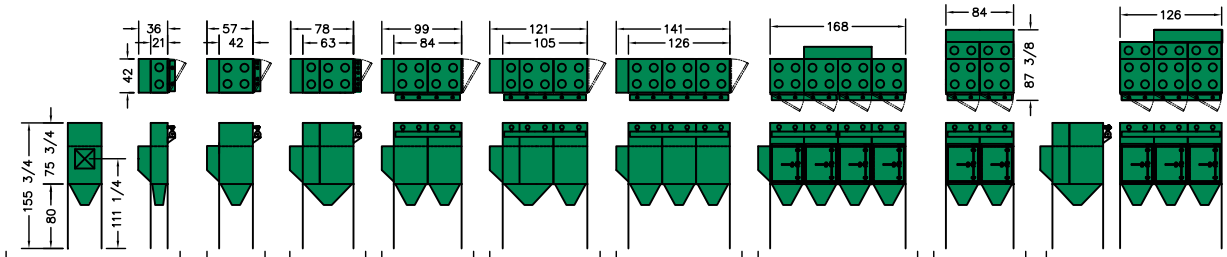

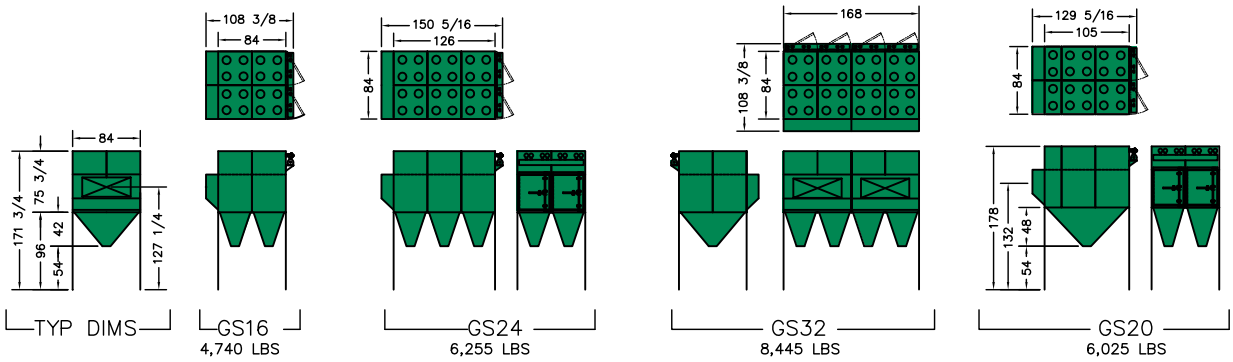

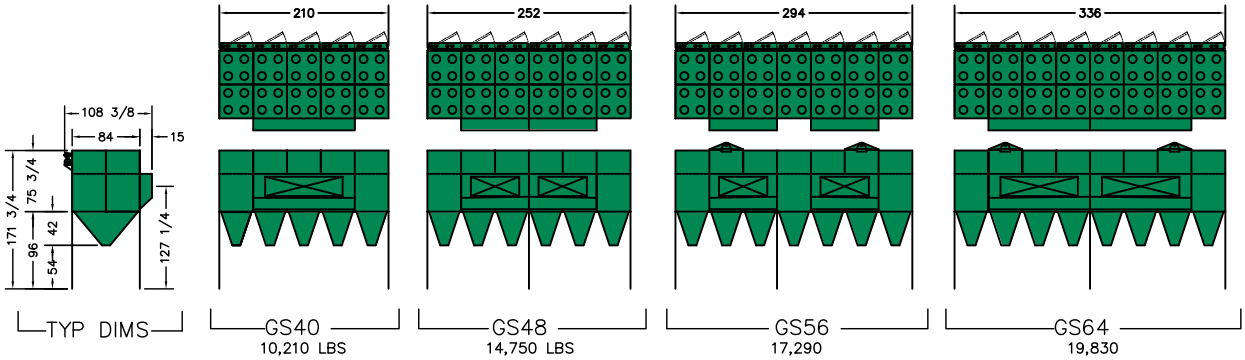

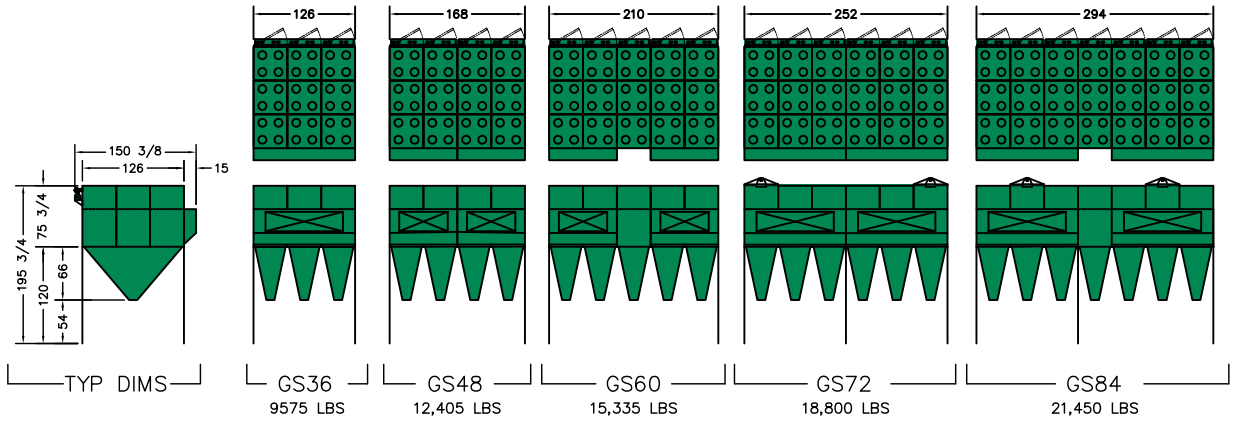

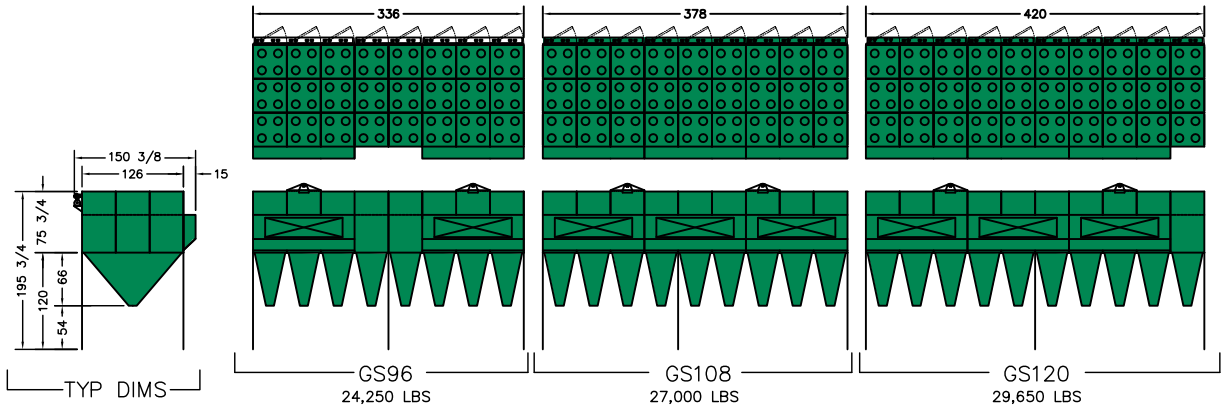

Model # Code

GS 24
- 24 — # of cartridges
- GS — Gold Series

Standard hopper arrangements shown. See opposite page for other hopper options.

Inlet Protection

Inlet/Outlet Chemical Isolation

Designed to react within milliseconds of detecting an explosion, a chemical isolation system can be installed in either inlet and/or outlet ducting. The chemical isolation system creates a chemical barrier that suppresses the explosion within the ducting, reduces the propagation of flame through the ducting and minimizes pressure increases within connected process equipment.

Fast-Acting Valve

Designed to close within milliseconds of detecting an explosion, the fast-acting valve installs in either inlet and/or outlet ducting. The fast-acting valve creates a mechanical barrier within the ducting, which effectively isolates pressure and flame fronts (from either direction) from being able to propagate further through the process.

Back Draft Damper

The mechanical back draft damper was designed to be installed in the inlet ducting. The damper utilizes a mechanical barrier that is held open by the process air and is slammed shut by the pressure forces of the explosion. When closed, the mechanical barrier isolates pressure and flame fronts from being able to propagate further up the process stream.

Chemical Suppression

Designed to react within milliseconds of detecting an explosion, a chemical suppression system is installed in the collectors dirty air section, being it in the filter housing or the hopper. The chemical suppression system prevents expanding a deflagration by releasing a chemical agent.

Outlet Protection

Ventex Valve

The Ventex valve was designed to be installed in the outlet ducting of a dust collection system. This valve utilizes a mechanical barrier to isolate pressure and flame fronts caused by the explosion from propagating further through the ducting. The mechanical barrier reacts within milliseconds and is closed by the pressure of the explosion.

High Speed Abort Gates

High speed abort gates are designed to be installed in the outlet ducting of the dust collection system. The devices are designed to divert process air and/or smoke to a safe location outside when a possible ignition source is detected entering the dust collection system or when a fire is detected. Its primary purpose is to protect the inside of the building from burning debris, embers or smoke

Integrated Safety Monitoring Filter

The iSMF has been proven to isolate the downstream equipment from the progression of a flame front during an explosion. The Gold Series dust collector with an integrated Safety Monitoring Filter allows you to recirculate exhaust air back into the work space when your dust is explosive. The key advantage of this device is that it prevents the transmission of explosive dust (fuel) from the collector.

Explosion Venting

Explosion Vent

Designed to be the "weak" link of the vessel, explosion vents open when predetermined pressures are reached inside the dust collector allowing the overpressure and flame fronts to exit to a safe area. Explosion vents minimize damage to the dust collector caused by overpressure created by a deflagration. Camfil Farr's standard explosion vents are ATEX certified and NFPA compliant.

Flameless Vent

Designed to install over a standard explosion vent, the "FlamQuench SQ" extinguishes the flame front exiting the vented area not allowing it to exit the device. This allows conventional venting to be accomplished indoors where it could otherwise endanger personnel and/or ignite secondary explosions.

Explosion Venting Sequence

Gold Series® Options

Clean Air Plenum Access Door

View Port

Copper Tubing

Diaphragm Silencer

Diaphragm Shut Off Valve

Compressed Air Regulator

Blower

Blower Silencer

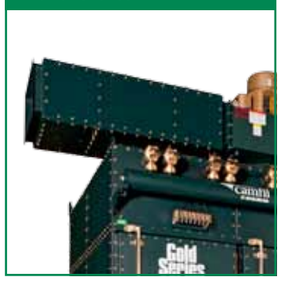

Pulse Header Silencer

Integrated Safety Monitoring Filter

Abrasion Resistant Inlet

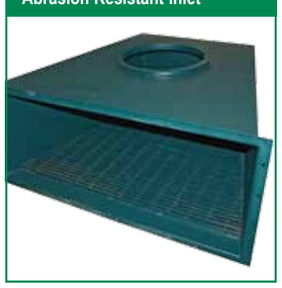

Drop Out Module

Spark Diverter Inlet

Remote Safety Monitoring Filter

Air Quality Booth

Clean Sweep

GS High Vacuum

Platform and Ladder

Low Pro Hopper Quick Seal

GS Skirt

GS Drum Kit with Slide Gate

Custom Structural Steel

Rotary Airlock

Auger Screw Conveyor

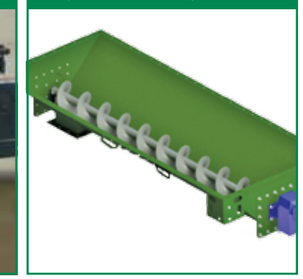

Self Dumping Hopper

Complete Skid Packages

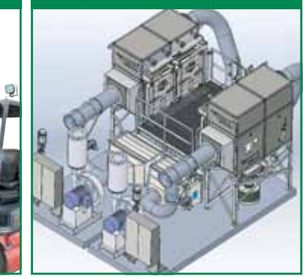

Sprinklers

Bag-In Bag-Out (BIBO)

Butterfly Valve

Continuous Liner Discharge

Explosion Vent

Explosion Vent With Blast Gate

Vertical Explosion Vent

Flameless Explosion Vent

UHMW Mining Inlet Baffle

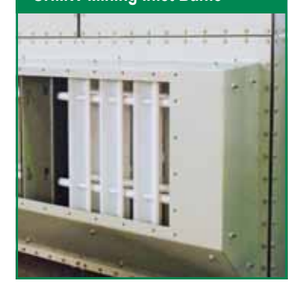

GS Back Draft Damper

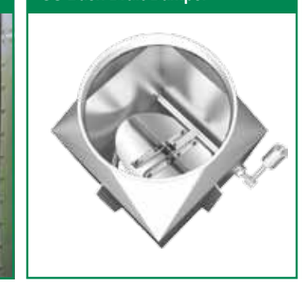

Chemical Suppression System

What will you think of next?

If you can think of it, we can do it!

camfil FARR
AIR POLLUTION CONTROL

Gold Series® Controls

Automatic Filter Cleaning and Energy Saving Motor Controls

GSC Controller

Our newest touch screen controller with energy efficient modes of operation. The software provides a flat menu structure that allows access to the most common parameters with the fewest number of button clicks. The language and units are easily changed to accommodate 8 different languages. The advanced section has multiple inputs that can trigger alarms for multiple external sensors and devices. A USB port is provided for software updates. A key advantage of the new touchscreen is only two wires have to be ran between the touchscreen and the pulse solenoids no matter how many solenoids there are.

Smart Solenoid Controller

Camfil Farr APC introduces a new cost saving innovation. The timer controls for pulsing the solenoids are now embedded with the solenoids so you no longer have to wire a remote timer board to the solenoid tray. The ON and OFF times of the solenoids are easily adjusted through dials integrated into the solenoid tray.

FDC Controller

The Farr Dust Collector (FDC) Controller's flexible design allows it to be adapted to many dust collector configurations.

Custom GS Controller

VFD Controller

The timer controller with VFD Option provides complete control of the blower during and after startup. It has all the necessary functions for a controlled start of the Gold Series without the high current loads typically associated with blowers during startup. It also provides the ability to control the blower's speed resulting in the greatest energy savings and process functionality.

(IDC) Integrated Dust Collector Controller with smart start

Camfil Farr APC Product Overview

Gold Series® Collectors

- Modular design for flexibility
- Heavy duty construction
- Gold Cone™ HemiPleat® filters
- Component configurations are virtually unlimited

GS Camtain® Collectors

- Pharmaceutical and hazardous dust applications
- Bag In Bag Out (BIBO) safe change containment systems
- Independently surrogate tested for containment performance

FarrVac

- Pulse-cleaned, portable industrial vacuum
- Maintains constant suction during operation
- 16-gal tank and optional extender to fit 55-gal drum available

GS High Vacuum

- Vessel strength: 17 in Hg vacuum, 8 PSI positive pressure
- 2 and 4-cartridge models
- Use as central vacuum system, positive or negative product receiver or high pressure bin vent

Cyclone Separators

- High efficiency centrifugal particulate separators
- Excellent as prefilters to large cartridge collector systems in many applications

GSM4 Mini Systems

- Self-contained systems for 1,000 to 2,000 CFM applications
- Fully assembled and prewired unit includes fan, controls, motor starter, filters and cleaning system

Zephyr® III Portables

- Three-stage filtration
- For welding fumes, grinding dusts
- 700 CFM at capture hood
- Heavy duty fume arm is free of obstruction inside

GSP Packaged Systems

- Smoke and dust collector for CNC laser and plasma cutters
- Fully assembled and prewired unit - just plug it in!
- Fan rated 2,500 CFM at 10" w.c.

GSB Booths

- Encapsulates work area
- Cantilevered roof design
- Excellent cross draft ventilation keeps dust out of breathing zone

Efficient Fan Motors

- Fan provided with premium efficient "E" motor
- Non-overloading backward inclined fan wheels with standard supplied integrated damper

GS-Mini™ Portables

- Single cartridge dust collector
- Mini solution for sub 500 CFM applications where you want a dedicated dust collector for one process machine or as a bin vent

Controls

- FDC Controller
- Motor Starters
- VFD's
- Custom Controls

HemiPleat® Filters

- High performance filtration with Multiple media options
- State-of-the art pleat spacing
- Size for nearly all industrial dust collector brands

Gold Cone™

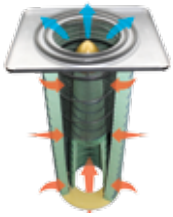

- Lower pressure drop
- Enhanced cleaning for more efficient operation
- Excellent energy performance

NoOval

- Improves performance of existing dust collector
- Greater media utilization
- More effective cleaning and lower pressure drop

DuraPleat®

- Handles difficult dust applications
- Exceptionally rugged, long lasting
- Washable media may be reused in many applications

World's largest dust collector factory

25 acres - 280,000 sq. feet of factory space dedicated to dust collection!

Gold Series
AIR POLLUTION CONTROL

Looks Like a Safe Because It's

BUILT LIKE A SAFE

DUST AND FUME PROBLEMS SOLVED

scan to visit

www.camfilfarrapc.com

Camfil Farr APC | 3505 S. Airport Road, Jonesboro, AR 72401
870-933-8048 | e-mail: filterman@farrapc.com | 800-479-6801

Nunhems USA, Inc. Parma, ID

Herding Filter Units

Project:	Type:	CFM - m3/h:	% Efficency / Air Quality
P-1899	HSL 1500-12/18 SZ	4700 - 7985	<0.1mg/m3 (=0.0004 gr/ft3) or 99.97% @ 0.3micron
P-2112	Delta Sys 1500-144/9 (3KA) GZ	23200 - 39417	<0.1mg/m3 (=0.0004 gr/ft3) or 99.97% @ 0.3micron

1.00 Technical data

Rev. 08 11/03

Type plate of the filter unit

Herding GmbH Filtertechnik August-Borsig-Str. 3 92224 Amberg	Phone ++49(0)9621/6300 Fax ++49(0)9621/630120 E-mail: info@herding.com http: www.herding.com	reine Produktivität Herding FILTERTECHNIK

Type	HSL 1500-12/18 SZ	
Serial No.	12411	
Year of manufacture	2005	
Filter area	91.68	m²
Exhaust air rate	8,000	m³/h
Admissible operating pressure	- 0.1 / + 0.1	bar
Admissible operating temperature	50	°C
Weight	1450	kg

Type plate of the pressure vessel (cleaning unit)

Herding GmbH Filtertechnik August-Borsig-Str. 3 92224 Amberg	Phone ++49(0)9621/6300 Fax ++49(0)9621/630120 E-mail: info@herding.com http: www.herding.com	reine Produktivität Herding FILTERTECHNIK

Pressure Vessel
Test Group I

Admissible operating pressure	5	bar
Year of manufacture	2005	
Serial No.	12411	
Volume	22.5	l
Admissible operating temperature	50	°C

Color ..... RAL 2004
Order No. (Herding GmbH) AU05-00298-1
Commission No. ..... Herding Filtration L.L.C. P-1899
Drawing No. P-1899

Filter unit limits

Application ..... seed manufacturing
Type of dust ..... seeds & clay
.....Depending on the materials and process parameters, dust may be inclined to burn
.....Depending on the alloy and process parameters, dust may be explosive
.....

The filter unit is designed to separate solid materials from the gas phase.
This filter unit is not suitable for removing bacteria and/or viruses.
No ignition sources are to be drawn into the filter unit!
Never use the filter unit as a refuse chute!

The filter unit is intended **exclusively** for the following parameters:

Noise emission see Section 2.80
Sound pressure level (filter unit with integrated fan) ..... 78 dB(A)

Point of installation
Indoor installation ..... yes
Outdoor installation ..... no
Suitability ..... the atmosphere is not explosive

Operating parameters
see parameters on the type plate of the filter unit
Maximal loading per unit of filter area ..... 1.45 m^3/m^2min
Maximal gas temperature ..... 50 °C

Filter elements
Filter element ..... HSL 1500/18
Quantity ..... 12 units
Type 3K
Design ..... standard

Vacuum generator
Engineering with parameters: maximal gas temperature and elevation
see the operating parameters
Type ..... Radial fan VR 50 S 10/ 500 (496) 60Hz
Starting spark protection ..... no
Set-up ..... integrated in the filter unit
Design extraction air rate ..... see type plate of the filter unit
Design pressure level ..... 320 daPa
Design shaft power ..... 9.49 kW
Speed ..... 3600 min^{-1}
Electric motor
Speed ..... 3600 min^{-1}
Motor rating ..... 12.6 kW
Voltage ..... 460 V
Frequency ..... 60 Hz
Type of protection ..... IP 55
Design IMB5, IMV1
Insulation class ..... F

Cleaning
Medium
Gaseous medium ..... Compressed air
Incoming supply ..... 5-7 bar
Operating pressure ..... 4.5 bar
Tolerance ..... -0.3 / +0 bar
Number of quick-opening solenoid valves ..... 6 units
Control voltage ..... 120 V

HERDING DUST COLLECTOR

TYPE DELTASYS 1500-144/9 GZ

FACTORY NO 12850

YEAR OF MFG 2006

FILTER AREA 540 m^2

EXHAUST AIR RATE 39417 m^3/hr

OPERATING PRESSURE ±.1 bar

OP TEMP 70°C

WEIGHT 6000 kg

DIESEL GENERATOR SET

Image shown may not reflect actual package.

STANDBY
250 ekW 313 kVA
60 Hz 1800 rpm 480 Volts

Caterpillar is leading the power generation marketplace with Power Solutions engineered to deliver unmatched flexibility, expandability, reliability, and cost-effectiveness.

FEATURES

FUEL/EMISSIONS STRATEGY
- EPA Certified for Stationary Emergency Application (EPA Tier 3 emissions levels)

DESIGN CRITERIA
- The generator set accepts 100% rated load in one step per NFPA 110 and meets ISO 8528-5 transient response.

UL 2200 / CSA - Optional
- UL 2200 listed packages
- CSA Certified

Certain restrictions may apply. Consult with your Cat® Dealer.

FULL RANGE OF ATTACHMENTS
- Wide range of bolt-on system expansion attachments, factory designed and tested
- Flexible packaging options for easy and cost effective installation

SINGLE-SOURCE SUPPLIER
- Fully prototype tested with certified torsional vibration analysis available

WORLDWIDE PRODUCT SUPPORT
- Cat dealers provide extensive post sale support including maintenance and repair agreements
- Cat dealers have over 1,800 dealer branch stores operating in 200 countries
- The Cat® S•O•S℠ program cost effectively detects internal engine component condition, even the presence of unwanted fluids and combustion by-products

CAT® C9 ATAAC DIESEL ENGINE
- Utilizes ACERT™ Technology
- Reliable, rugged, durable design
- Field-proven in thousands of applications worldwide
- Four-stroke diesel engine combines consistent performance and excellent fuel economy with minimum weight
- ADEM™A4 electronic engine control

CAT GENERATOR
- Matched to the performance and output characteristics of Cat engines
- Load adjustment module provides engine relief upon load impact and improves load acceptance and recovery time
- UL 1446 Recognized Class H insulation

CAT EMCP 4 CONTROL PANELS
- Simple user friendly interface and navigation
- Scalable system to meet a wide range of customer needs
- Integrated Control System and Communications Gateway

SEISMIC CERTIFICATION
- Seismic Certification available
- Anchoring details are site specific, and are dependent on many factors such as generator set size, weight, and concrete strength.
  IBC Certification requires that the anchoring system used is reviewed and approved by a Professional Engineer
- Seismic Certification per Applicable Building Codes: IBC 2000, IBC 2003, IBC 2006, IBC 2009, CBC 2007
- Pre-approved by OSHPD and carries an OSP-0084-10 for use in healthcare projects in California

FACTORY INSTALLED STANDARD & OPTIONAL EQUIPMENT

System	Standard	Optional
Air Inlet	• Air cleaner	
Cooling	• Package mounted radiator	
Exhaust	• Exhaust flange outlet	[ ] Industrial [ ] Residential [ ] Critical Mufflers
Fuel	• Primary fuel filter with integral water separator • Secondary fuel filters • Fuel priming pump	
Generator	• Matched to the performance and output characteristics of Cat engines • Load adjustment module provides engine relief upon load impact and improves laod acceptance and recovery time • IP23 protection	[ ] Oversize and premium generators [ ] Permanent magnet excitation (PMG) [ ] Internal excited (IE) [ ] Anti-condensation space heaters
Power Termination	• Bus bar	[ ] Circuit breakers, UL listed [ ] Circuit breakers, IEC compliant
Control Panel	• EMCP 4 Genset Controller	[ ] EMCP 4.2 [ ] EMCP 4.3 [ ] EMCP 4.4 [ ] Local and remote annuniciator modules [ ] Load share module [ ] Digital I/O module [ ] Remote monitoring software
Mounting	• Rubber vibration isolators	
Starting/Charging	• 24 volt starting motor • Batteries	[ ] Battery chargers [ ] Oversize batteries [ ] Jacket water heater [ ] Heavy duty starting system [ ] Charging alternator
General	• Paint - Caterpillar Yellow except rails and radiators gloss black	The following options are based on regional and product configuration: [ ] Seismic Certification per Applicable Building Codes: IBC 2000, IBC 2003, IBC 2006, IBC 2009, CBC 2007 [ ] UL 2200 package [ ] EU Certificate of Conformance (CE) [ ] CSA Certification [ ] EEC Declaration of Conformity [ ] Narrow, wide or skid base [ ] Sound attenuated, weather protective or high ambient weather protective enclosures [ ] Single or dual wall integral fuel tanks [ ] Single or dual wall sub-base fuel tanks [ ] Integral & sub-base UL listed dual wall fuel tanks [ ] Automatic transfer switches (ATS)

STANDBY 250 ekW 313 kVA

60 Hz 1800 rpm 480 Volts

SPECIFICATIONS

CAT GENERATOR

Frame size..... LC5014H
Excitation..... Self Excitation
Pitch.....0.6667
Number of poles.....4
Number of bearings..... Single bearing
Number of Leads.....012
Insulation..... UL 1446 Recognized Class H with tropicalization and antiabrasion
- Consult your Caterpillar dealer for available voltages
IP Rating.....Drip Proof IP23
Alignment..... Pilot Shaft
Overspeed capability.....125
Wave form Deviation (Line to Line)..... 2%
Voltage regulator.....Three phase sensing
Voltage regulation.....Less than +/- 1/2% (steady state)

CAT DIESEL ENGINE

C9 ATAAC, I-6, 4-Stroke Water-cooled Diesel
Bore..... 112.00 mm (4.41 in)
Stroke..... 149.00 mm (5.87 in)
Displacement.....8.80 L (537.01 in^3)
Compression Ratio..... 16.1:1
Aspiration..... Air-to-Air Aftercooled
Fuel System..... Hydraulic electronic unit injection
Governor Type..... Caterpillar ADEM control system

CAT EMCP 4 SERIES CONTROLS

EMCP 4 controls including:
- Run / Auto / Stop Control
- Speed and Voltage Adjust
- Engine Cycle Crank
- 24-volt DC operation
- Environmental sealed front face
- Text alarm/event descriptions

Digital indication for:
- RPM
- DC volts
- Operating hours
- Oil pressure (psi, kPa or bar)
- Coolant temperature
- Volts (L-L & L-N), frequency (Hz)
- Amps (per phase & average)
- ekW, kVA, kVAR, kW-hr, %kW, PF (4.2 only)

Warning/shutdown with common LED indication of:
- Low oil pressure
- High coolant temperature
- Overspeed
- Emergency stop
- Failure to start (overcrank)
- Low coolant temperature
- Low coolant level

Programmable protective relaying functions:
- Generator phase sequence
- Over/Under voltage (27/59)
- Over/Under Frequency (81 o/u)
- Reverse Power (kW) (32) (4.2 only)
- Reverse reactive power (kVAr) (32RV)
- Overcurrent (50/51)

Communications:
- Four digital inputs (4.1)
- Six digital inputs (4.2 only)
- Four relay outputs (Form A)
- Two relay outputs (Form C)
- Two digital outputs
- Customer data link (Modbus RTU) (4.2 only)
- Accessory module data link (4.2 only)
- Serial annunciator module data link (4.2 only)
- Emergency stop pushbutton

Compatible with the following:
- Digital I/O module
- Local Annunciator
- Remote CAN annunciator
- Remote serial annunciator

STANDBY 250 ekW 313 kVA

60 Hz 1800 rpm 480 Volts

TECHNICAL DATA

Open Generator Set - - 1800 rpm/60 Hz/480 Volts	DM8501	
Tier 3		
Generator Set Package Performance		
Genset Power rating @ 0.8 pf	312.5 kVA	
Genset Power rating with fan	250 ekW	
Coolant to aftercooler		
Coolant to aftercooler temp max	49 ° C	120 ° F
Fuel Consumption		
100% load with fan	73.3 L/hr	19.4 Gal/hr
75% load with fan	58.8 L/hr	15.5 Gal/hr
50% load with fan	43.8 L/hr	11.6 Gal/hr
Cooling System[1]		
Air flow restriction (system)	0.12 kPa	0.48 in. water
Air flow (max @ rated speed for radiator arrangement)	497 m³/min	17551 cfm
Engine Coolant capacity with radiator/exp. tank	36.0 L	9.5 gal
Engine coolant capacity	22.0 L	5.8 gal
Radiator coolant capacity	14.0 L	3.7 gal
Inlet Air		
Combustion air inlet flow rate	25.0 m³/min	882.9 cfm
Exhaust System		
Exhaust stack gas temperature	456.6 ° C	853.9 ° F
Exhaust gas flow rate	63.5 m³/min	2242.5 cfm
Exhaust flange size (internal diameter)	170 mm	7 in
Exhaust system backpressure (maximum allowable)	5.9 kPa	23.7 in. water
Heat Rejection		
Heat rejection to coolant (total)	105 kW	5971 Btu/min
Heat rejection to exhaust (total)	277 kW	15753 Btu/min
Heat rejection to aftercooler	83 kW	4720 Btu/min
Heat rejection to atmosphere from engine	21 kW	1194 Btu/min
Heat rejection to atmosphere from generator	19.7 kW	1120.3 Btu/min
Alternator[2]		
Motor starting capability @ 30% voltage dip	543 skVA	
Frame	LC5014H	
Temperature Rise	150 ° C	270 ° F
Lube System		
Sump refill with filter	39.0 L	10.3 gal
Emissions (Nominal)[3]		
NOx g/hp-hr	2.97 g/hp-hr	
CO g/hp-hr	.36 g/hp-hr	
HC g/hp-hr	.1 g/hp-hr	
PM g/hp-hr	.079 g/hp-hr	

[1] For ambient and altitude capabilities consult your Cat dealer. Air flow restriction (system) is added to existing restriction from factory.
[2] Generator temperature rise is based on a 40° C (104° F) ambient per NEMA MG1-32.
[3] Emissions data measurement procedures are consistent with those described in EPA CFR 40 Part 89, Subpart D & E and ISO8178-1 for measuring HC, CO, PM, NOx. Data shown is based on steady state operating conditions of 77°F, 28.42 in HG and number 2 diesel fuel with 35° API and LHV of 18,390 btu/lb. The nominal emissions data shown is subject to instrumentation, measurement, facility and engine to engine variations. Emissions data is based on 100% load and thus cannot be used to compare to EPA regulations which use values based on a weighted cycle.

RATING DEFINITIONS AND CONDITIONS

Applicable Codes and Standards: AS1359, CSA C22.2 No 100-04, UL142, UL489, UL601, UL869, UL2200, NFPA 37, NFPA 70, NFPA 99, NFPA 110, IBC, IEC60034-1, ISO3046, ISO8528, NEMA MG 1-22, NEMA MG 1-33, 72/23/EEC, 98/37/EC, 2004/108/EC

Standby - Output available with varying load for the duration of the interruption of the normal source power. Average power output is 70% of the standby power rating. Typical operation is 200 hours per year, with maximum expected usage of 500 hours per year.

Ratings are based on SAE J1349 standard conditions. These ratings also apply at ISO3046 standard conditions.

Fuel Rates are based on fuel oil of 35° API (16° C or 60° F) gravity having an LHV of 42 780 kJ/kg (18,390 Btu/lb) when used at 29° C (85° F) and weighing 838.9 g/liter (7.001 lbs/U.S. gal.).

Additional Ratings may be available for specific customer requirements. Consult your Cat representative for details.

DIMENSIONS

Package Dimensions	
Length	**Information not available at this time.**
Width	
Height	

NOTE: For reference only - do not use for installation design. Please contact your local dealer for exact weight and dimensions. (General Dimension Drawing #3728295).

2013 Caterpillar
All rights reserved.

Materials and specifications are subject to change without notice. The International System of Units (SI) is used in this publication.

CAT, CATERPILLAR, their respective logos, "Caterpillar Yellow," the "Power Edge" trade dress, as well as corporate and product identity used herein, are trademarks of Caterpillar and may not be used without permission.

Exhaust Emission Data Sheet
1500DQGAB
60 Hz Diesel Generator Set

Engine Information:

Model:	Cummins Inc, QSK50-G4 NR2	Bore:	6.25 in. (159 mm)
Type:	4 Cycle, 60°V, 16 Cylinder Diesel	Stroke:	6.25 in. (159 mm)
Aspiration:	Turbocharged and Low Temperature Aftercooled	Displacement:	3067 cu. In. (50.2 liters)
Compression Ratio:	15.0:1		
Emission Control Device:	Turbocharged and Low Temperature Aftercooled		

	1/4	1/2	3/4	Full	Full
PERFORMANCE DATA	**Standby**	**Standby**	**Standby**	**Standby**	**Prime**
BHP @ 1800 RPM (60 Hz)	555	1111	1666	2205	1971
Fuel Consumption (gal/Hr)	32.5	60.2	83.4	109.4	97.8
Exhaust Gas Flow (CFM)	4815	8320	10180	12065	11000
Exhaust Gas Temperature (°F)	665	745	785	915	835
EXHAUST EMISSION DATA					
HC (Total Unburned Hydrocarbons)	0.33	0.19	0.12	0.08	0.09
NOx (Oxides of Nitrogen as NO2)	3.20	3.50	4.90	5.70	5.80
CO (carbon Monoxide)	0.96	0.55	0.40	0.57	0.48
PM (Particular Matter)	0.15	0.05	0.05	0.03	0.03
SO2 (Sulfur Dioxide)	0.13	0.12	0.12	0.11	0.11
Smoke (Bosch)	0.50	0.20	0.20	0.20	0.20

All values are Grams per HP-Hour, Smoke is Bosch#

TEST CONDITIONS

Data is representative of steady-state engine speed (± 25 RPM) with full load (± 2%). Pressures, temperatures, and emission rates were stabilized.

Fuel Specification:	ASTM D975 No. 2-D diesel fuel with 0.03-0.05% sulfur content (by weight), and 40-48 cetane number.
Fuel Temperature:	99 ± 9 °F (at fuel pump inlet)
Intake Air Temperature:	77 ± 9 °F
Barometric Pressure:	29.6 ± 1 in. Hg
Humidity:	NOx measurement corrected to 75 grains H2O/lb dry air
Reference Standard:	ISO 8178

The NOx, HC, CO and PM emission data tabulated here are representative of test data taken from a single engine under the test conditions shown above. Data for the other components are estimated. These data are subjected to instrumentation and engine-to-engine variability. Field emission test data are not guaranteed to these levels. Actual field test results may vary due to test site conditions, installation, fuel specification, test procedures and instrumentation. Engine operation with excessive air intake or exhaust restriction beyond published maximum limits, or with improper maintenance, may results in elevated emission levels.

Model:	**DQGAB**
Frequency:	**60**
Fuel type:	**Diesel**
KW rating:	**1500 standby**
	1350 prime
Emissions level:	**EPA NSPS Stationary Emergency Tier 2**

Generator set data sheet

Our energy working for you.™

Power Generation

Exhaust emission data sheet:	**EDS-1059**
Exhaust emission compliance sheet:	**EPA-1093**
Sound performance data sheet:	**MSP-1034**
Cooling performance data sheet:	**MCP-152**
Prototype test summary data sheet:	**PTS-265**
Standard set-mounted radiator cooling outline:	**0500-4357**
Optional set-mounted radiator cooling outline:	
Optional heat exchanger cooling outline:	
Optional remote radiator cooling outline:	**0500-4309**

Fuel consumption

	Standby				**Prime**				**Continuous**
	kW (kVA)				**kW (kVA)**				**kW (kVA)**
Ratings	1500 (1875)				1350 (1688)				
Load	**1/4**	**1/2**	**3/4**	**Full**	**1/4**	**1/2**	**3/4**	**Full**	**Full**
US gph	32.5	60.2	83.4	109.4	30.1	55.2	78.1	97.8	
L/hr	123	227.9	315.7	414.1	113.9	209	295.6	370.2	

Engine

	Standby rating	**Prime rating**	**Continuous rating**
Engine manufacturer	Cummins Inc.		
Engine model	QSK50-G4 NR2		
Configuration	Cast iron, V 16 cylinder		
Aspiration	Turbocharged and low temperature aftercooled		
Gross engine power output, kWm (bhp)	1656 (2220)	1470 (1971)	
BMEP at set rated load, kPa (psi)	2192 (318)	1957 (284)	
Bore, mm (in)	159 (6.25)		
Stroke, mm (in)	159 (6.25)		
Rated speed, rpm	1800		
Piston speed, m/s (ft/min)	9.5 (1875)		
Compression ratio	15:1		
Lube oil capacity, L (qt)	235 (248)		
Overspeed limit, rpm	2100 ±50		
Regenerative power, kW	168		

Fuel flow

Maximum fuel flow, L/hr (US gph)	757 (200)	
Maximum fuel inlet restriction, kPa (in Hg)	30 (9.0)	
Maximum fuel inlet temperature, °C (°F)	70 (160)	

©2010 Cummins Power Generation Inc. All rights reserved. Cummins Power Generation and Cummins are registered trademarks of Cummins Inc.
"Our energy working for you." is a trademark of Cummins Power Generation. Specifications are subject to change without notice.
D-3334j (7/10)

Air	Standby rating	Prime rating	Continuous rating
Combustion air, m^3/min (scfm)	139 (4895)	133 (4700)	
Maximum air cleaner restriction, kPa (in H_2O)	6.2 (25)		
Alternator cooling air, m^3/min (cfm)	207 (7300)		

Exhaust			
Exhaust flow at set rated load, m^3/min (cfm)	342 (12065)	312 (11000)	
Exhaust temperature, °C (°F)	491 (915)	446 (835)	
Maximum back pressure, kPa (in H_2O)	6.78 (27)		

Standard set-mounted radiator cooling			
Ambient design, °C (°F)	40 (104)		
Fan load, kW_m (HP)	45 (60)		
Coolant capacity (with radiator), L (US gal)	541 (143)		
Cooling system air flow, m^3/min (scfm)	1705 (60150)		
Total heat rejection, MJ/min (Btu/min)	72.3 (68580)	64.8 (61510)	
Maximum cooling air flow static restriction, kPa (in H_2O)	0.12 (0.5)		
Maximum fuel return line restriction kPa (in Hg)			

Optional set-mounted radiator cooling			
Ambient design, °C (°F)			
Fan load, kW_m (HP)			
Coolant capacity (with radiator), L (US gal)			
Cooling system air flow, m^3/min (scfm)			
Total heat rejection, MJ/min (Btu/min)			
Maximum cooling air flow static restriction, kPa (in H_2O)			
Maximum fuel return line restriction, kPa (in Hg)			

Optional heat exchanger cooling			
Set coolant capacity, L (US gal)			
Heat rejected, jacket water circuit, MJ/min (Btu/min)			
Heat rejected, aftercooler circuit, MJ/min (Btu/min)			
Heat rejected, fuel circuit, MJ/min (Btu/min)			
Total heat radiated to room, MJ/min (Btu/min)			
Maximum raw water pressure, jacket water circuit, kPa (psi)			
Maximum raw water pressure, aftercooler circuit, kPa (psi)			
Maximum raw water pressure, fuel circuit, kPa (psi)			
Maximum raw water flow, jacket water circuit, L/min (US gal/min)			
Maximum raw water flow, aftercooler circuit, L/min (US gal/min)			
Maximum raw water flow, fuel circuit, L/min (US gal/min)			
Minimum raw water flow at 27 °C (80 °F) inlet temp, jacket water circuit, L/min (US gal/min)			
Minimum raw water flow at 27 °C (80 °F) inlet temp, aftercooler circuit, L/min (US gal/min)			
Minimum raw water flow at 27 °C (80 °F) inlet temp, fuel circuit, L/min (US gal/min)			
Raw water delta P at min flow, jacket water circuit, kPa (psi)			
Raw water delta P at min flow, aftercooler circuit, kPa (psi)			
Raw water delta P at min flow, fuel circuit, kPa (psi)			
Maximum jacket water outlet temp, °C (°F)			
Maximum aftercooler inlet temp, °C (°F)			
Maximum aftercooler inlet temp at 25 °C (77 °F) ambient, °C (°F)			
Maximum fuel return line restriction, kPa (in Hg)			

Our energy working for you.™

www.cumminspower.com

©2010 Cummins Power Generation Inc. All rights reserved. Cummins Power Generation and Cummins are registered trademarks of Cummins Inc.
"Our energy working for you." is a trademark of Cummins Power Generation. Specifications are subject to change without notice.
D-3334j (7/10)

Power Generation

Optional remote radiator cooling[1]

	Standby rating	Prime rating	Continuous rating
Set coolant capacity, L (US gal)			
Max flow rate at max friction head, jacket water circuit, L/min (US gal/min)	1779 (470)		
Max flow rate at max friction head, aftercooler circuit, L/min (US gal/min)	492 (130)		
Heat rejected, jacket water circuit, MJ/min (Btu/min)	35.44 (33610)	32.11 (30455)	
Heat rejected, aftercooler circuit, MJ/min (Btu/min)	26.93 (25545)	23.96 (22725)	
Heat rejected, fuel circuit, MJ/min (Btu/min)			
Total heat radiated to room, MJ/min (Btu/min)	9.94 (9425)	8.78 (8330)	
Maximum friction head, jacket water circuit, kPa (psi)	67 (10)		
Maximum friction head, aftercooler circuit, kPa (psi)	48 (7)		
Maximum static head, jacket water circuit, m (ft)	18.3 (60)		
Maximum static head, aftercooler circuit, m (ft)	18.3 (60)		
Maximum jacket water outlet temp, °C (°F)	104 (220)	100 (212)	
Maximum aftercooler inlet temp at 25 °C (77 °F) ambient, °C (°F)	49 (120)		
Maximum aftercooler inlet temp, °C (°F)	71 (160)	66 (150)	
Maximum fuel flow, L/hr (US gph)			
Maximum fuel return line restriction, kPa (in Hg)			

Weights[2]

Unit dry weight kgs (lbs)	10989 (24220)
Unit wet weight kgs (lbs)	11493 (25330)

Notes:

[1] For non-standard remote installations contact your local Cummins Power Generation representative.
[2] Weights represent a set with standard features. See outline drawing for weights of other configurations.

Derating factors

Standby	Engine power available up to 890 m (2920 ft) at ambient temperatures up to 40 °C (104 °F). Above these elevations, derate at 6.6% per 305 m (1000 ft) and 14.0% per 10 °C (18 °F).
Prime	Engine power available up to 562 m (1844 ft) at ambient temperatures up to 40 °C (104 °F). Above these elevations, derate at 6.6% per 305 m (1000 ft) and 14.0% per 10 °C (18 °F).
Continuous	

Ratings definitions

Emergency standby power (ESP):	Limited-time running power (LTP):	Prime power (PRP):	Base load (continuous) power (COP):
Applicable for supplying power to varying electrical load for the duration of power interruption of a reliable utility source. Emergency Standby Power (ESP) is in accordance with ISO 8528. Fuel Stop power in accordance with ISO 3046, AS 2789, DIN 6271 and BS 5514.	Applicable for supplying power to a constant electrical load for limited hours. Limited Time Running Power (LTP) is in accordance with ISO 8528.	Applicable for supplying power to varying electrical load for unlimited hours. Prime Power (PRP) is in accordance with ISO 8528. Ten percent overload capability is available in accordance with ISO 3046, AS 2789, DIN 6271 and BS 5514.	Applicable for supplying power continuously to a constant electrical load for unlimited hours. Continuous Power (COP) is in accordance with ISO 8528, ISO 3046, AS 2789, DIN 6271 and BS 5514.

Our energy working for you.™

www.cumminspower.com

©2010 Cummins Power Generation Inc. All rights reserved. Cummins Power Generation and Cummins are registered trademarks of Cummins Inc.
"Our energy working for you." is a trademark of Cummins Power Generation. Specifications are subject to change without notice.
D-3334j (7/10)

Power Generation

Alternator data

Voltage	Connection[1]	Temp rise degrees C	Duty[2]	Single phase factor[3]	Max surge kVA[4]	Winding No.	Alternator data sheet	Feature Code
380	Wye, 3-phase	125	P		5743		ADS-332	B596-2
380	Wye, 3-phase	150/105	S/P		6716		ADS-333	B595-2
380	Wye, 3-phase	80	P		6716		ADS-333	B687-2
380	Wye, 3-phase	105/80	S/P		7361		ADS-334	B599-2
380	Wye, 3-phase	80	S		7695		ADS-335	B660-2
440	Wye, 3-phase	125	P		4602		ADS-330	B692-2
440	Wye, 3-phase	150/125	S/P		5521		ADS-331	B691-2
440	Wye, 3-phase	125/105	S/P		5743		ADS-332	B663-2
440	Wye, 3-phase	80	S		6716		ADS-333	B688-2
440	Wye, 3-phase	80	P		7695		ADS-331	B689-2
480	Wye, 3-phase	105	P		4602		ADS-330	B693-2
480	Wye, 3-phase	125/105	S/P		5521		ADS-331	B276-2
480	Wye, 3-phase	80	P		5521		ADS-331	B694-2
480	Wye, 3-phase	105/80	S/P		5743		ADS-332	B600-2
480	Wye, 3-phase	80	S		6716		ADS-333	B601-2
600	Wye, 3-phase	105	P		4602		ADS-330	B581-2
600	Wye, 3-phase	125/105	S/P		5521		ADS-331	B602-2
600	Wye, 3-phase	80	P		5521		ADS-331	B695-2
600	Wye, 3-phase	105/80	S/P		5743		ADS-332	B603-2
600	Wye, 3-phase	80	S		6716		ADS-333	B604-2
4160	Wye, 3-phase	105	P		6204		ADS-322	B312-2
4160	Wye, 3-phase	105/80	S/P		7005		ADS-323	B313-2

Notes:

[1] Limited single phase capability is available from some three phase rated configurations. To obtain single phase rating, multipy the three phase kW rating by the Single Phase Factor[3]. All single phase ratings are at unity power factor.

[2] Standby (S), Prime (P) and Continuous ratings (C).

[3] Factor for the *Single Phase Output from Three Phase Alternator* formula listed below.

[4] Maximum rated starting kVA that results in a minimum of 90% of rated sustained voltage during starting.

Formulas for calculating full load currents:

Three phase output

$$\frac{\text{kW} \times 1000}{\text{Voltage} \times 1.73 \times 0.8}$$

Single phase output

$$\frac{\text{kW} \times \text{SinglePhaseFactor} \times 1000}{\text{Voltage}}$$

Cummins Power Generation
1400 73rd Avenue N.E.
Minneapolis, MN 55432 USA
Phone: 763 574 5000
Fax: 763 574 5298

Warning: Back feed to a utility system can cause electrocution and/or property damage. Do not connect to any building's electrical system except through an approved device or after building main switch is open.

Our energy working for you.™

www.cumminspower.com

©2010 Cummins Power Generation Inc. All rights reserved. Cummins Power Generation and Cummins are registered trademarks of Cummins Inc. "Our energy working for you." is a trademark of Cummins Power Generation. Specifications are subject to change without notice.
D-3334j (7/10)

Power Generation

Emissions Summary SD080

5.0 Liter Generac Diesel Powered Generator

GENERAC®
POWER SYSTEMS, INC.

Description	5.0 Liter Ford (New Holland) 4 cylinder Diesel Powered Genset
Engine Size *	5.0 Liter 305 in3
RPM	1800
Load	80 kW 1.0 Power Factor
BMEP	181
Gross Engine Power (hp)	125
Boost Pressure Ratio	1.9
Exhaust Outlet	4.0 in
Exhaust Temp Degree F	950 º
Exhaust Flow ft3/min	848
Nox grams/bhp-hr	6.74
CO - grams/bhp-hr	1.9
THC - grams/bhp-hr	0.23
SO2 (See Note below)	0.21 g/bhp-hr
Timing	Std
Particulates (PM)	0.98
Brake Horsepower	125
Fuel Flow (Gallons / hr.)	6
Ambient Temperature	97º F
Generator	Generac 80 kW 390 mm 90.1% efficient

Test Ref B2947-T19* Fuel # 2 Diesel (low sulfur - .07%) 7.387 #/gal 18,190 btu/lb LHV
For additional information consult factory Orig test 8-97
Summary from B2947,2982,3645,3822,

BUILDING A - HVAC 01 & 02
(SIMILAR UNIT)

Goodman
Air Conditioning & Heating

CPG Commercial

3- to 6-Ton

Packaged Gas/Electric Units

13 SEER / Up to 11.3 EER / 80% AFUE

Cooling Capacity:
34,600 — 71,000 BTU/h
Heating Capacity:
36,800 — 110,400 BTU/h

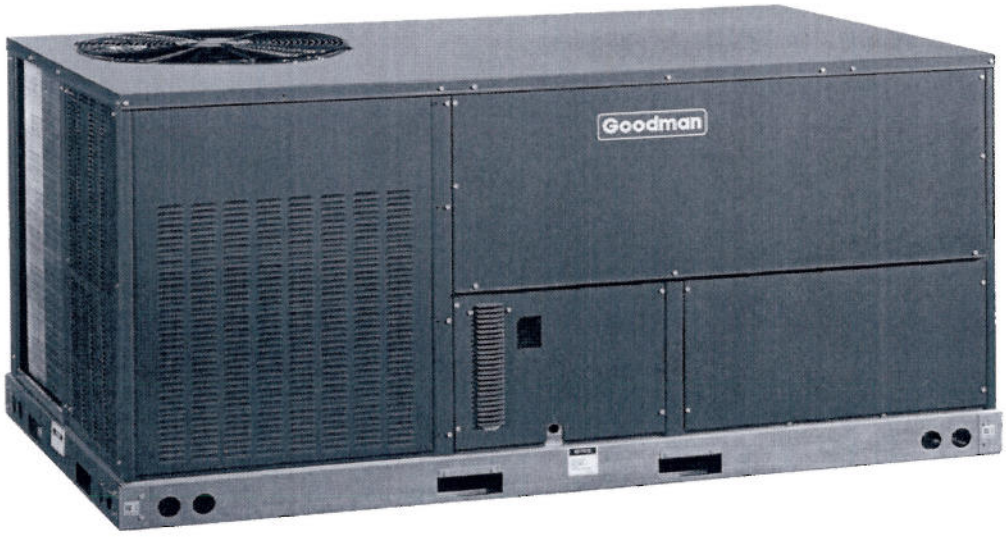

Standard Features

- R-410A chlorine-free refrigerant
- TuffTube™ tubular heat exchanger
- High-efficiency scroll compressor
- HIgh- and low-pressure switches
- Copper tube / aluminum fin coils
- Contactor with lugs
- High-capacity, steel-cased filter drier
- 24-volt terminal strip
- Convertible
- Built-in filter rack with standard 2" filters
- Bottom utility entry
- Complies with California NOx emissions standards
- AHRI Certified; ETL Listed

Cabinet Features

- Heavy-gauge, galvanized-steel cabinet with UV-resistant powder-paint finish
- Full Perimeter Rail

Contents

Nomenclature 2
Product Specifications 3
Expanded Cooling Data 11
Airflow Data 23
Dimensions 30
Wiring Diagrams 34
Accessories 44

20 YEAR HEAT EXCHANGER LIMITED WARRANTY* | 5 YEAR PARTS LIMITED WARRANTY* | R-410A REFRIGERANT | ETL | AHRI CERTIFIED | BBB ACCREDITED BUSINESS | BETTER VALUE

* Complete warranty details available from your local dealer or at www.goodmanmfg.com.

PRODUCT SPECIFICATIONS — CPG036 (CONT.)

	CPG036 0901D***B*	CPG036 0903D***B*	CPG036 0903B***B*	CPG036 0904B***B*	CPG036 0907B***B*
COOLING CAPACITY					
Total BTU/h	34,600	34,600	34,600	34,600	34,600
Sensible BTU/h	25,600	25,600	25,600	25,600	25,900
SEER / EER	13 / 11.0	13 / 11.0	13 / 11.0	13 / 11.0	13 / 11.0
Decibels	78	78	78	78	78
AHRI #s	4385059	4385060	4385060	4385061	4397607
HEATING CAPACITY					
High Input / Output BTU/h	92 / 74	92 / 74	92 / 74	92 / 74	92 / 74
Low. Input / Output kBTU/h	69 / 55	69 / 55	69 / 55	69 / 55	69 / 55
Steady State Efficiency (AFUE)	80	80	80	80	80
Temperature Rise Range (°F) Hi / Low	40-70 / 30-60	40-70 / 30-60	40-70 / 30-60	40-70 / 30-60	40-70 / 30-60
No. of Burners	4	4	4	4	3
EVAPORATOR MOTOR / COIL					
Motor Type	Direct Drive	Direct Drive	Belt Drive	Belt Drive	Belt Drive
# of Wheels (D x W)	1 (10" x 9")	1 (10" x 9")	1 (11" x 10")	1 (11" x 10")	1 (11" x 10")
Indoor Nominal CFM	1,200	1,200	1,200	1,200	1,200
Motor Speed Tap (Cooling)	Low Speed	Low Speed	---	---	---
Indoor Motor FLA (Cooling)	2.50	2.50	3.8	1.9	1.9
Horsepower - RPM	⅓ - 890	⅓ - 890	1.0 - 1,725	1.0 - 1,725	1.0 - 1,725
Piston Size (Cooling)	0.068	0.068	0.068	0.068	0.068
Filter Size (")	(1) 24 x 24 x 2	(1) 24 x 24 x 2	(1) 24 x 24 x 2	(1) 24 x 24 x 2	(1) 24 x 24 x 2
Drain Size (NPT)	¾"	¾"	¾"	¾"	¾"
R-410A Refrigerant Charge Cir #1(oz.)	90	83	83	90	90
Evaporator Coil Face Area (ft²)	5.4	5.4	5.4	5.4	5.4
Rows Deep / Fins per Inch	3 / 16	3 / 16	3 / 16	3 / 16	3 / 16
BELT DRIVE EVAP FAN DATA					
# of Wheels (D x W)	---	---	1 (11" x 10")	1 (11" x 10")	1 (11" x 10")
Motor Sheave / Blower Sheave	---	---	1VL40 X ⅝ / AK69 X 1	1VL40 X ⅝ / AK69 X 1	1VL40 X ⅝ / AK69 X 1
Belt	---	---	AX52	AX52	AX52
CONDENSER FAN / COIL					
Quantity of Condenser Fan Motors	1	1	1	1	1
Horsepower - RPM	¼ / 1,090	¼ / 1,090	¼ / 1,090	¼ - 890	¼ - 1,075
Fan Diameter/ # Fan Blades	22 / 4	22 / 4	22 / 4	22 / 4	22 / 4
Outdoor Nominal CFM	3,800	3,800	3,800	3,800	3,800
Face Area (ft²)	18.0	18.0	18	18	13
Rows Deep/ Fins per Inch	1 / 22	1 / 22	1 / 22	1 / 22	2 / 16
COMPRESSOR					
Quantity / Stage	1 / Single	1 / Single	1 / Single	1 / Single	1 / Single
Type	Scroll	Scroll	Scroll	Scroll	Scroll
Compressor RLA / LRA	16.7 / 79.0	10.4 / 73.0	10.4 / 73.0	5.8 / 38.0	3.8 / 36.5
ELECTRICAL DATA					
Voltage-Phase-Frequency	208/230-1-60	208/230-3-60	208/230-3-60	460-3-60	575-3-60
Indoor Blower HP / FLA	⅓ / 2.5	⅓ / 2.5	1 / 3.8	1 / 1.9	1 / 1.9
Outdoor Fan HP / FLA	¼ / 1.4	¼ / 1.4	¼ / 1.4	¼ / 0.8	¼ / 0.8
Total Unit Amps	20.57	14.35	15.65	8.47	6.68
Min. Circuit Ampacity[1]	25	17	18	10	8
Max. Overcurrent Protection (amps)[2]	40	25	25	15	15
Power Supply Conduit Hole	1.125	1.125	1.125	1.125	1.125
Low-Voltage Conduit Hole	½"	½"	½"	½"	½"
OPERATING WEIGHT/SHIPPING (LBS)	535/ 560	535/ 560	535/ 560	535/ 560	535/ 560

[1] Wire size should be determined in accordance with National Electrical Codes. Extensive wire runs will require larger wire sizes.
[2] May use fuses or HACR-type circuit breakers of the same size as noted.

NOTES

- Always check the S&R plate for electrical data on the unit being installed.
- When a factory-installed powered convenience outlet is installed in the equipment, the unit MCA (Min. Circuit Ampacity) will increase by 7.5A for 208/230V units, increase by 3.75A for 460V units, and by 3A for 575V units. The MOP (Max. Overcurrent Protection) device must be sized accordingly.

BUILDING A - ADP 60K BTU
(SIMILAR UNIT)

Advanced Distributor Products®

SG-UUH-01
April 2012

Specification Guide

FSA, FOA, SEP, & HED Series

Unit Heaters and Duct Furnaces

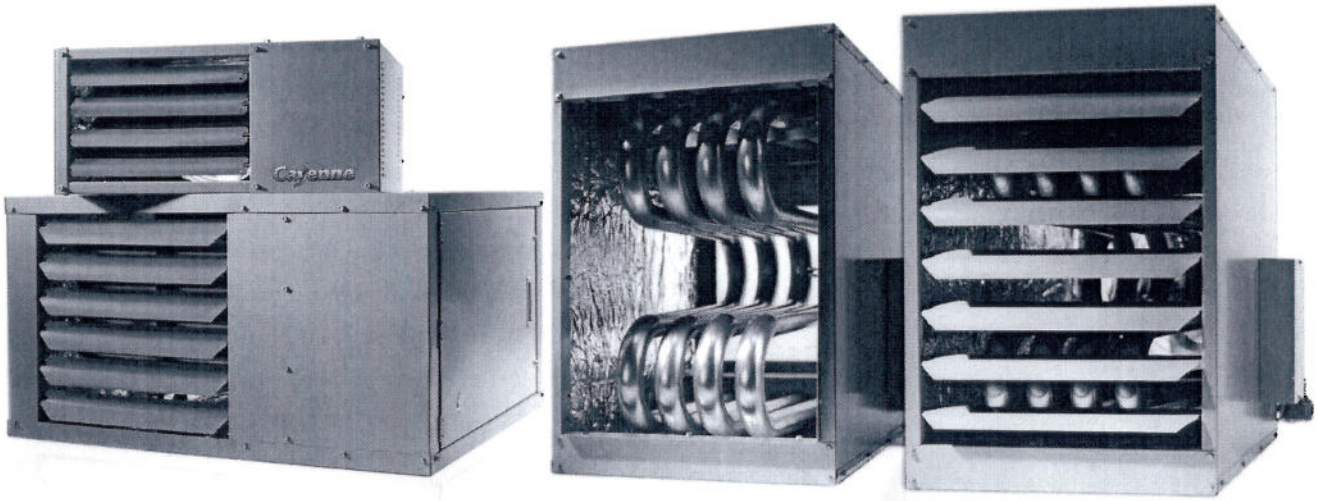

Contents **Page**

Nomenclature 2
Product Features 3
FSA Series 4
FOA Series 6
SEP Series 8
HED Series 10

AHRI CERTIFIED™ www.ahridirectory.org

ISO 9001:2008
Registered Quality System

ETL LISTED C US

Product improvement is a continuous process at Advanced Distributor Products. Therefore, product specifications are subject to change without notice and without obligation on our part. Please contact your ADP representative or distributor to verify details.
© by Advanced Distributor Products. All rights reserved.

2175 West Park Place Blvd., Stone Mountain, GA 30087
www.adpnow.com

FSA Series

Low Profile Unit Heaters

Product Features

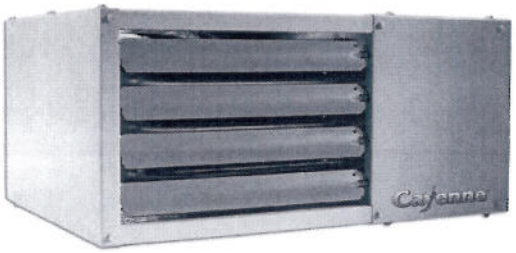

- Residential – low profile units.
- Great for garages & shops.
- Power exhaust system allows vertical venting to 25 ft. or horizontal venting to 40 ft.
- Sidewall venting eliminates roof penetrations.
- Wiring junction box is located inside of unit.
- Self-diagnostic board with LED display improves troubleshooting.
- 1" clearance from ceiling for easy installation.
- Heating capacities from 30,000 – 75,000 BTUH.
- Up to 81% thermal efficiency.
- Easy to clean tubular heat exchangers, made of aluminized steel, provide resistance to corrosion and oxidation.
- Direct drive propeller fans are dynamically balanced for quiet and smooth operation
- Self-diagnostic board with LED display improves troubleshooting efficiency and accuracy.

Technical Data

	Gas Heating Performance				Connections	
Model	Heating Capacity Input (BTUH)	Heating Output (BTUH)	Steady State Efficiency	Temp Rise (deg F)	Flue Size Round (in)	Gas Piping Size (in, NPT)
# FSA* -30	30,000	24,300	81.0%	42	3 [1]	1/2
# FSA* -45	45,000	36,500	81.0%	45	3 [1]	1/2
FSA* -60	60,000	48,000	80.0%	55	4 [2]	1/2
FSA* -75	75,000	60,000	80.0%	60	4 [2]	1/2

[1] 2-1/8 x 3 in. (54 x 76 mm) diameter adaptor is furnished with unit for flue connection.

[2] 2 x 4 in. (51 x 102 mm) diameter adaptor is furnished with unit for flue connection.

	Fan Data								Physical Data	
Model	Num of Fans	Diameter (in)	Num of Blades	Motor Output (hp)	Motor Full Load Amps	Motor RPMs	Air Volume (CFM)	Air throw at 8 ft. mount height (ft)	Dimensions H x W x L (in)	Ship Weight (lbs)
# FSA* -30	1	10	4	1/20	1.7	1650	535	25	13 x 25 x 24	45
# FSA* -45	1	10	4	1/20	1.7	1650	750	25	13 x 25 x 24	50
FSA* -60	1	14	3	1/10	4.1	1050	830	40	18 x 25 x 25	87
FSA* -75	1	14	3	1/10	4.1	1050	950	40	18 x 25 x 25	91

* N = Natural Gas; P = LP Gas

\# Sold in pallet quantities of four (4) per model. No mix or match of models.

All models have aluminized steel heat exchanger. All models are 115 volts, 60 Hz, 1 phase.

BUILDING A HEATERS #1, 2, 4, 5, 6
BUILDING G HEATER #2
BUILDING H HEATER #2
BUILDING K HEATERS #1 THROUGH 6
150K BTU

Heating safely with gas-fired infrared heaters

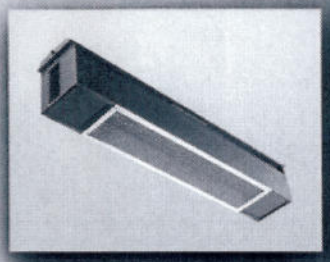

Patio Heaters

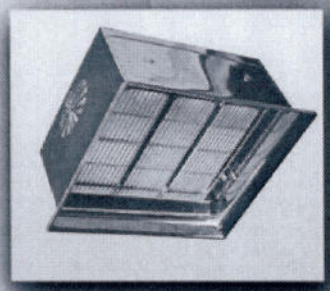

High Intensity Ceramic Heaters

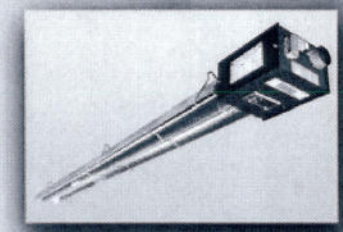

Low Intensity Tube Heaters

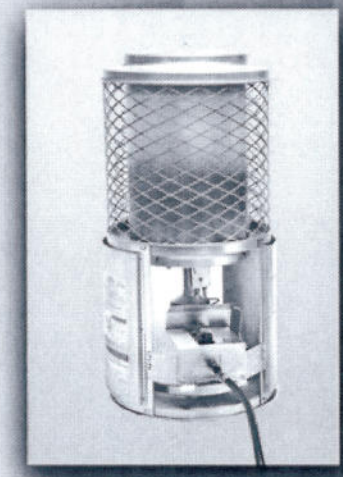

Construction Heaters

FROM THE

INFRARED HEATER

SAFETY COUNCIL

IRSC
INFRARED HEATER SAFETY COUNCIL

irsafetycouncil.org

PROPER VENTILATION

Heaters must be vented per all applicable codes. All infrared heating manufacturers provide a variety of vent terminations and piping. For specific ventilation requirements, reference the manufacturer's Installation, Operation and Service manual.

Where unvented infrared heaters are used, natural or mechanical means shall be provided to supply and exhaust at least 4 cfm/1000 Btu/h of input of installed heaters.

CAREFULLY FOLLOW ALL VENTILATION INSTRUCTIONS!

- ☑ Provide proper fire guarding (thimbles, flashing, etc.) when venting through a combustible wall.
- ☑ Provide mechanical or natural ventilation of 4 cfm/1000 Btu/h of input when operating unvented.
- ☑ Provide fresh air for combustion when operating in harsh environments.
- ☑ Use a single control when common venting.
- ☑ Provide adequate separation from heater exhaust to air intake.
- ☑ Verify vent line(s) are free of obstructions and debris.

Consult manual for specific installation guidelines as each application may vary.

ROOFTOP VENTING REQUIREMENTS

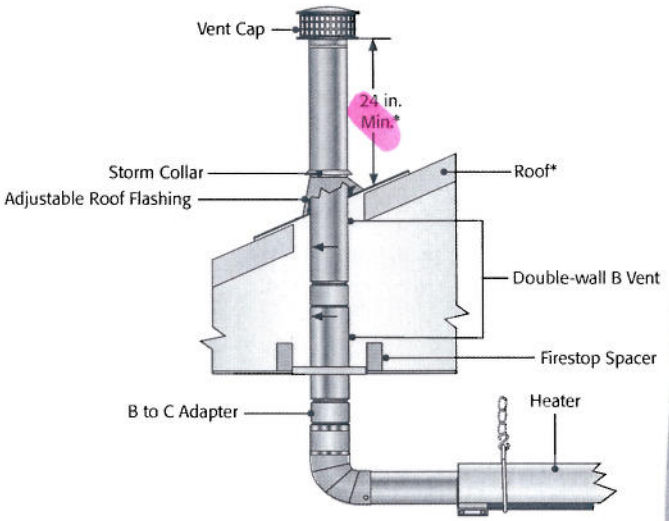

*Consult the NFPA ANSI Z223.1 Gas Vent Termination criteria if roof pitch exceeds 9:12

SIDEWALL VENTING REQUIREMENTS

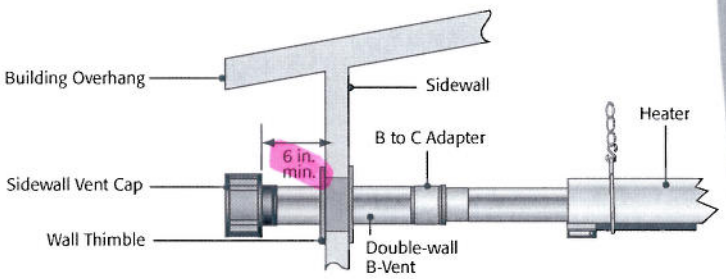

BUILDING G HEATER 01
BUILDING M HEATER 01 & 02

LF24 Unit Heater performance Specifications

	GAS HEATING PERFORMANCE				CONNECTIONS			FAN DATA							PHYSICAL DATA	
Model*	HEATING CAPACITY INPUT BTUH [KW]	HEATING OUTPUT BTUH [KW]	STEADY STATE EFFICIENCY	TEMP. RISE °F [°C]	VERT. FLUE SIZE ROUND INCHES [MM]	HORIZ. FLUE SIZE ROUND INCHES [MM]	GAS PIPING SIZE INCHES [NPT]	NO. OF FANS	DIAMETER INCHES [MM]	NO. OF BLADES	MOTOR OUTPUT HP [W]	MOTOR FULL LOAD AMPS	MOTOR RPMS	AIR VOL. CFM [L/S]	DIMENSIONS H X W X L [INCHES]	SHIP WT. [LBS.]
LF24-30A	30,000 [8.8]	24,300 [7.1]	81.0%	42 [23]	3[1] [76]	4[3] [102]	1/2	1	10 [254]	4	1/20 [37]	1.7	1650	535 [250]	13 x 25 x 24	60
LF24-45A	45,000 [13.2]	36,500 [10.7]	81.0%	45 [25]	3[1] [76]	4[3] [102]	1/2	1	10 [254]	4	1/20 [37]	1.7	1650	750 [355]	13 x 25 x 24	63
LF24-60A	60,000 [17.6]	48,000 [14.1]	80.0%	55 [31]	4[2] [102]	5[4] [127]	1/2	1	14 [356]	3	1/8 [93]	4.1	1050	830 [390]	18 x 25 x 25	87
LF24-75A	75,000 [22.0]	60,000 [17.6]	80.0%	60 [33]	4[2] [102]	5[4] [127]	1/2	1	14 [356]	3	1/8 [93]	4.1	1050	950 [450]	18 x 25 x 25	91

*"A" denotes aluminized steel heat exchanger. All models are 115 volts, 60 hertz, 1 phase.

[1]2-1/8 x 3 in. (54 x 76 mm) diameter adaptor is furnished with unit for flue connection.
[2]2 x 4 in. (51 x 102 mm) diameter adaptor is furnished with unit for flue connection.
[3]3 x 4 in. (76 x 102 mm) vent adaptor required (not furnished) for horizontal venting in residential applications.
[4]4 x 5 in. (102 x 127 mm) vent adaptor required (not furnished) for horizontal venting in residential applications.

	GAS HEATING PERFORMANCE					CONNECTIONS		FAN DATA							PHYSICAL DATA	
Model*	HEATING CAPACITY INPUT BTUH [KW]	OUTPUT NATURAL BTUH [KW]	OUTPUT LPG/ PROPANE BTUH [KW]	STEADY STATE EFFICIENCY NATURAL	STEADY STATE EFFICIENCY LPG/ PROPANE	FLUE SIZE ROUND INCHES [MM]	GAS PIPING SIZE INCHES [NPT]	NO. OF FANS	DIA. INCHES [MM]	NO. OF BLADES	NO. OF MOTORS	MOTOR OUTPUT HP [W]	MOTOR FULL LOAD AMPS [TOTAL]	AIR VOL. CFM [L/S]	DIMENSIONS H X W X L [INCHES]	SHIP WT. [LBS.]
LF24-100S LF24-100A	100,000 [114.3]	80,500 [23.6]	82,000 [24.0]	80.5%	82.0%	4[1] [102]	1/2	1	16 [406]	4	1	1/8 [93]	2.1	1900 [895]	32-3/16 x 20-3/16 x 39-3/16	140
LF24-115S LF24-115A	115,000 [33.7]	92,000 [27.0]	92,000 [27.0]	80.0%	80.0%	4[1] [102]	1/2	1	16 [406]	4	1	1/8 [93]	2.1	1900 [895]	32-3/16 x 20-3/16 x 39-3/16	140
LF24-145S LF24-145A	145,000 [42.5]	116,000 [34.0]	116,000 [34.0]	80.0%	80.0%	4[1] [102]	1/2	1	16 [406]	4	1	1/8 [93]	2.1	1900 [895]	32-3/16 x 20-3/16 x 39-3/16	150
LF24-175S LF24-175A	172,500 [50.6]	138,000 [40.4]	138,000 [40.4]	80.0%	80.0%	5[2] [127]	1/2	1	16 [406]	4	1	1/8 [93]	2.1	2200 [1035]	32-3/16 x 23-1/8 x 40	165
LF24-200S LF24-200A	195,000 [56.9]	156,000 [45.6]	156,000 [45.6]	80.0%	80.0%	5[2] [127]	1/2	1	16 [406]	4	1	1/8 [93]	2.1	2200 [1035]	32-3/16 x 23-1/8 x 40	165
LF24-230S LF24-230A	230,000 [67.5]	184,000 [53.9]	184,000 [53.9]	80.0%	80.0%	5[2] [127]	3/4	2	16 [406]	4	2	1/8 [93]	2.1 [4.2]	4400 [2075]	32-3/16 x 41-1/8 x 40	270
LF24-250S LF24-250A	250,000 [73.3]	201,250 [59.0]	205,000 [60.1]	80.5%	82.0%	5[2] [127]	3/4	2	16 [406]	4	2	1/8 [93]	2.1 [4.2]	4400 [2075]	32-3/16 x 41-1/8 x 40	285
LF24-300S LF24-300A	300,000 [87.9]	241,500 [70.8]	246,000 [72.1]	80.5%	82.0%	5[2] [127]	3/4	2	16 [406]	4	2	1/8 [93]	2.1 [4.2]	4400 [2075]	32-3/16 x 41-1/8 x 40	305
LF24-345S LF24-345A	345,000 [101.1]	276,000 [80.9]	281,200 [82.4]	80.0%	81.5%	6[3] [152]	3/4	2	16 [406]	4	2	1/8 [93]	2.1 [4.2]	4400 [2075]	32-3/16 x 41-1/8 x 41-1/8	310
LF24-400S LF24-400A	390,000 [114.3]	312,000 [91.4]	312,000 [91.4]	80.0%	80.0%	6[3] [152]	3/4	2	16 [406]	5	2	1/8 [93]	2.1 [4.2]	4400 [2075]	32-3/16 x 41-1/8 x 41-1/8	315

*"S" denotes stainless steel heat exchanger. "A" denotes aluminized steel heat exchanger. All models are 115 volts, 60 hertz, 1 phase.

[1]2-1/8 x 4 in. (54 x 102 mm) diameter adaptor is furnished with unit for flue connection.
[2]2-1/4 x 2-3/4 in. (57 x 70 mm) rectangular to 5 in. (127 mm) round adaptor is furnished with unit for flue connection.
[3]2-1/4 x 2-3/4 in. (57 x 70 mm) rectangular to 6 in. (152 mm) round adaptor is furnished with unit for flue connection.

BUILDIN H HEATER #1
75K BTU MODINE

MODINE
APPLIED THERMAL INNOVATION™

9-117.3
October, 2008

Gas-Fired Pressurized Low Intensity Infrared Heaters

Series TLP

INDOOR AIR SOLUTIONS

MODINE INDOOR AIR SOLUTIONS

Table 4.1
Performance

Input MBH		50	60	75	100	125	150	175	200
Certified Tube Lengths (ft.)		20, 30	20, 30, 40	30, 40	30, 40, 50 ②	40, 50, 60	50, 60	50, 60, 70 ③	50, 60, 70 ③
Recommended Mounting Height (ft.) ①		10 – 12	10 – 12	12 – 14	12 – 14	15 – 22	15 – 22	18 – 28	20 - 30
Recommended Tube System Application ①	Spot or Area Heating	U-Tube							
	Total Building Heating	Straight Tube							

① Recommended Mounting Height and Tube System Applications are meant as a general guide and are adjusted to meet the requirements of the actual application. The applications are as follows:

- Spot or Area Heating is an application where occupant comfort is the goal and occupant(s) are either relatively stationary (Spot - Example: small work cell or dispersed over a slightly wilder range than with Spot Heating (Area - Example: assembly line). Mounting height is typically at the low end of the range shown above.
- Total Building Heating is an application where average space temperature is to be maintained, however due to the significant temperature gradient differences on long straight tube systems, areas may exist where direct occupant comfort is not achieved.

② TLP 100 not available for Propane Gas operation at 50 ft. tube system length.

③ TLP 175 and 200 not available for Propane Gas operation at 70 ft. tube system length.

Table 4.2 - Utilities

Electrical Rating	Gas Connection (inch)	Minimum Gas Inlet Pressure (" W.C.)	Maximum Gas Inlet Pressure (" W.C.)	Manifold Gas Pressure (" W.C.)	Tube/Vent Diameter (inch)
120V/60Hz/1Ph 5.5 AMP	1/2 NPT	7.0 (natural gas) 11.0 (propane gas)	14.0	3.5 (natural gas) 10.0 (propane gas)	4 (O.D.)

Table 4.3
Combustible Material Clearances (inches) ① ② ③

Input MBH	"A" ①	"B" ②	"C" ②
50/60	9	54	20
75	9	58	20
100/125	9	76	24
150/175/200	12	106	38

① Clearance to each end and above the U-Tube is 12 inches.

② In unvented applications, clearance from radiant tube end is 36" in all directions.

③ Refer to Figures 4.1 through 4.3.

Figure 4.1
Combustible Material Clearances - Straight Tube

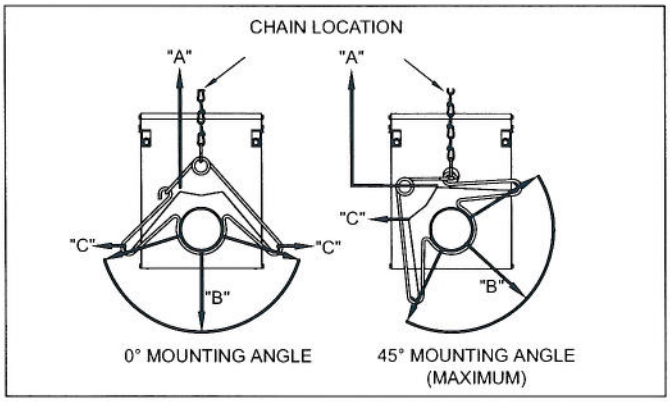

Figure 4.2
Stacking Height

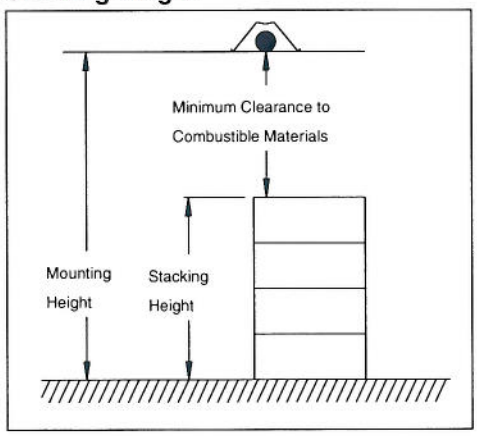

Figure 4.3
Combustible Material Clearances - U-Tube

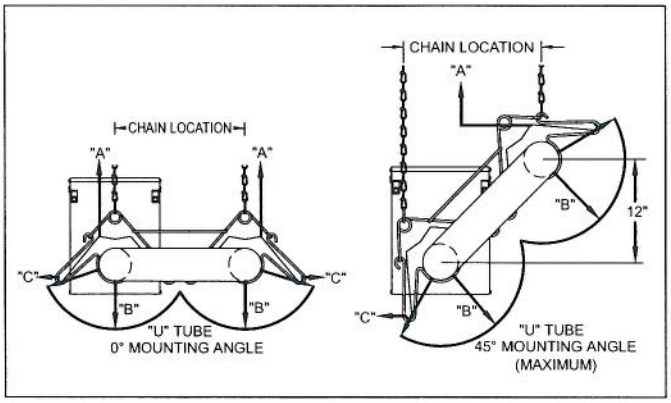

BUILDING K HEATER 7, 8, 9

OPERATING INSTRUCTIONS AND OWNER'S MANUAL

READ INSTRUCTIONS CAREFULLY: Read and follow all instructions. Place instructions in a safe place for future reference. Do not allow anyone who has not read these instructions to assemble, light, adjust or operate the heater.

HEATSTAR

MODEL

ERXL-60	
ERXL-80	ERXL-80S
ERXL-100	ERXL-100S
ERXL-125	ERXL-125S
ERXL-150	ERXL-150L
ERXL-175	ERXL-175L

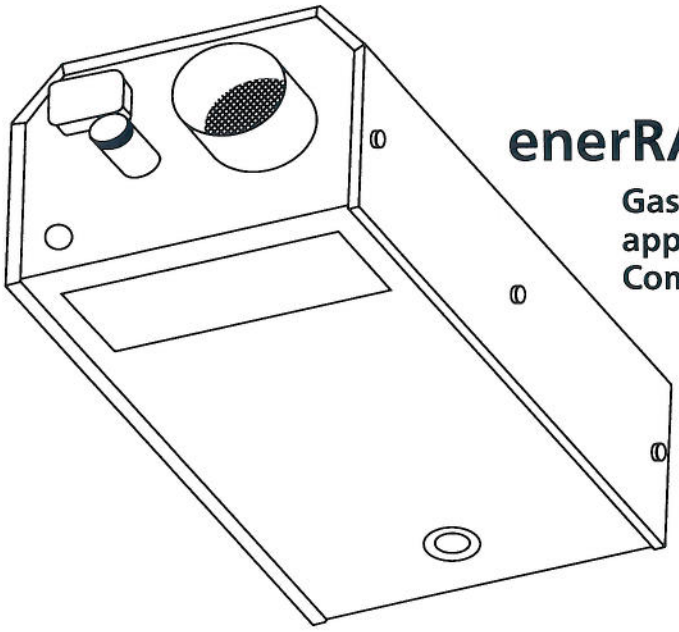

enerRADIANT®

Gas-Fired, Low-Intensity Infrared Heaters approved for residential Garage/ Commercial Applications

WARNING: Improper installation, adjustment, alteration, service or maintenance can cause injury or property damage. Refer to this manual. For assistance or additional information consult a qualified installer, service agency or the gas supplier.

– WHAT TO DO IF YOU SMELL GAS

- Open Windows
- **DO NOT** try to light any appliance.
- **DO NOT** use electrical switches.
- **DO NOT** use any telephone in your house. Immediately call your local gas supplier from a neighbor's telephone. Follow the gas supplier's instructions.
- **Do not** touch any electrical switch; do not use any phone in your building.
- Installation and service must be performed by a qualified installer, service agency or the gas supplier.
- If you cannot reach your gas supplier, call the Fire Department.

FOR YOUR SAFETY:
Do not store or use gasoline or other flammable vapors and liquids in the vicinity of this or any other appliance.

WARNING: If the information in these instructions are not followed exactly, a fire or explosion may result causing property damage, personal injury or loss of life.

Enerco Group, Inc., 4560 W. 160TH ST., CLEVELAND, OHIO 44135 • 216-881-5500 3/08 ?????????

SECTION 4

Venting / Ducting

General Requirements

Heater must be vented in accordance with specification ANSI Z223.1 - latest revisions. Partial information relating to this specification is provided in this section with regard to size and configurations for venting arrangements (see Figures 12, 13, 14, 15, 16). For complete information consult ANSI Z223.1 - latest revision and applicable local codes. Use the following guidelines to help insure an adequate, safe venting arrangement.

a) Be sure that method selected for venting heater complies with all codes as required for each particular location.

b) Exhaust end of heater will accept a four (4") inch flue pipe using the flue pipe adapter.

c) Heater may be vented to the outdoors either vertically or horizontally.

d) If heater is to be vented horizontally:

1) *Vent must exit building not less than seven (7') feet above grade when located adjacent to public walkways.*

2) *Vent must terminate at least three (3') feet above any forced air inlet located within ten feet (10').*

3)*Vent must terminate at least four (4') feet below, four (4') feet horizontally from, or one (1') foot above any door, window, or gravity inlet into any building.*

4) *Vent terminal shall be located at least twelve (12") inches from any opening through which vent gases could enter the building.*

e) Vent terminal must be beyond any combustible overhang.

f) If condensation in the flue is a problem, the flue length should be shortened or insulated.

g) For vent specifications all of the following conditions must be met.

1) *Maximum total vent length allowed in forty-five (45') feet.*

2) *Maximum outside air supply duct allowed forty-five (45') feet.*

3) *Maximum total vent length plus outside air supply length plus extension package shall not exceed sixty -five (65') feet.*

4) *Under length conditions 1) through 3) above — a total of two (2) elbows are allowed for vent and outside air supply together. Subtract fifteen (15') feet per additional elbow from maximum length allowed if more than two (2) elbows are used.*

Alternative Arrangements / Optional Equipment for Venting

Unvented Operation

a) Sufficient ventilation must be provided in the amount of 4 CFM per 1,000 BTU/hr. firing rate.

b) Refer to ANSI Z223.1 - latest revision, NFPA-54 and local codes for additional information.

c) Use of optional outside combustion air is not recommended with unvented heaters due to pressure considerations.

Horizontal Venting

a) In combustible or noncombustible walls, use Tjerblund VH1-4" (Stk. #19022). Follow vent manufacturer's instructions for proper installation. (Alternative vent Enerco Stk. #19023).

b) Four (4") inch O.D. flue pipe is required. Thirty (30') feet maximum length is recommended. Up to forty-five (45') feet maximum may be used if insulated to prevent excess condensation. (See General Requirements on page 21 for additional information).

c) All flue joints should be sealed using suitable product such as General Electric RTV106 or Permatex Form-A-Gasket Red High Temperature Silicone Adhesive Sealant.

d) Vent terminal should be installed at a height sufficient to prevent blockage by snow.

e) Building materials should be protected from degradation by flue gases.

Vertical Venting

a) Four (4") inch O.D. flue pipe, maximum forty-five (45') feet in length may be used as shown with approved vent cap. (See General Requirements on page 21 for additional information.)

b) An insulated thimble may be required to pass through combustible structures (check local codes).

c) All flue joints should be sealed using suitable products (see recommendation for horizontal venting.)

Draft Hood Venting

a) Refer to ANSI Z223.1 - latest revision, NFA-54 for heights and vent sizes recommended for proper venting. (Check local codes for additional information.)

b) Minimum six (6") inch O.D. vent is recommended.

Common Venting

a) Horizontal run to vent must never exceed 75% of the vertical height of the vent. Refer to ANSI Z223.1 - latest revision, NFA-54 for proper vent sizes and installation.

b) Open area of common vent must equal the sum of the open area of individual vents connected to it. (See chart and diagrams - page 25.)

c) Use double wall vent as required (check codes.)

d) Heaters sharing a common vent must be controlled by the same thermostat.

e) All joints must be sealed using suitable products (see recommendation for horizontal vent - page 24.)

f) Connections to common stack must be positioned to avoid direct opposition between

BUILDING L REZNOR MODELS (7 UNITS)

REZNOR®
MODEL F

ANSI Z83.8 CAN/CGA 2.6

Gas-Fires, Gravity-Vented, Fan-Type Unit Heater for Commercial/Industrial Use

WARNING: Gas-fired appliances are not designed for use in hazardous atmospheres containing flammable vapors or combustible dust, or atmospheres containing chlorinated or halogenated hydrocarbons.

Installations in public garages or airplane hangars are permitted when in accordance with ANSI Z223.1 and NFPA 54 Codes or CAN1-B149 Codes and enforcing authorities.

DESCRIPTION

Reznor® Series 100, Model F gas-fired, gravity-vented unit heaters are designed for 80% thermal efficiency and are designed for use with natural or propane gas, as specified, in sizes from 25,000 to 400,000 BTUH gas input.

Model F unit heaters are designed for ceiling suspension with a propeller fan for air delivery.

A terminal strip connector facilitates field connection to a remote 24-volt thermostat for automatic operation. Each unit is provided with a fan control and all required limit safety controls, including an energy cutoff (ECO) device and a blocked vent switch.

These units are approved for installation in The United States and Canada by the Canadian Standards Association (CSA).

NOTE: When installing gravity vented appliances check local and state codes for requirements. Some states require the addition of spark pilot Option AH2 or AH3.

STANDARD FEATURES

- Orifices for natural gas
- Aluminized steel heat exchanger
- Aluminized steel burner rack with stainless steel insert
- Spark ignited, intermittent safety pilot with electronic flame supervision
- Single-stage combination gas valve (field adjustable for high altitude operation)
- 115/1/60 supply voltage
- 115 volt fan motor with internal overload protection
- Fan and limit safety controls
- Energy cutoff (ECO) device
- Blocked vent shutoff system
- 24-volt control voltage transformer
- Individually adjustable horizontal louvers
- Full safety fan guard
- Terminal strip connector for 24-volt field wiring
- Convenient bottom burner access
- 2-point 3/8"-16 threaded hanger connections
- Horizontal/vertical vent outlet

The Energy Policy Act of 2005 mandated that beginning August of 2008, no Gravity Vented Unit Heaters may be sold without an Intermittent Ignition Device (No Standing Pilot- Spark Ignition Only) AND, (either an automatic shutoff vent damper or a power vent exhaust). Your state may have already enacted this restriction in their local codes. Please take note of this when placing orders for gravity vented units.

OPTIONAL FEATURES - FACTORY INSTALLED

- Equipped for propane gas
- E-3 (409) stainless steel heat exchanger and burner
- Two-stage gas control (50% low fire) - Sizes 75-400
- Spark ignited, intermittent safety pilot with electronic flame supervision with timed lockout (timed lockout is required for propane gas)
- Manual summer/winter switch
- Burner air shutters
- 208/230 single phase supply voltage
- 220/240 volt/50 Hertz electrical operation
- Totally enclosed 115V motor
- Low ambient fan control relay

OPTIONAL FEATURES - FIELD INSTALLED

- Power venter
- Vertical louvers
- Downturn air nozzle, 25-65° or 50-90° variable air deflector range (includes 4-point suspension kit)
- Thermostat and relay kits
- Air recirculation kits
- Manual summer/winter switch
- Multiple heater control
- 4-point suspension kit
- Unit-mounted thermostat bracket
- Step down transformer 230/115 or 460/115
- Burner air shutters
- Low ambient fan control relay kit
- Hanger kit to suspend from 1" pipe (2 or 4 point suspension)
- Single-stage and two-stage thermostats
- Thermostat guard with locking cover
- Manual shutoff valve and union
- Gas conversion kit

NOTE: Not certified for residential use.

NOTE: *Regulated combination redundant gas valve consists of combination pilot solenoid valve, electric gas valve, pilot filter, pressure regulator, pilot shutoff, and manual shutoff, all in one body. Gas supply pressure must not exceed 0.5 psi (8 oz. or 14" w.c.). Minimum inlet pressure for natural gas is 5" w.c.; minimum inlet pressure for propane gas is 11" w.c.*

TECHNICAL DATA

Model F

Size		25		50		75		100		125	
Heating Input - BTUH (kW)		25,000	(7.3)	50,000	(14.7)	75,000	(22.0)	100,000	(29.3)	125,000	(36.6)
Thermal Output - BTUH (kw) (80%) [A]		20,000	(5.9)	40,000	(11.7)	60,000	(17.6)	80,000	(23.4)	100,000	(29.3)
Vent Outlet Diameter		4" Rd		4" Rd		5" Oval		6"Oval		7" Oval	
Gas Connection - Natural Gas [B]		1/2"		1/2"		1/2"		1/2"		1/2"	
Control Amps (24-volt)		0.33		0.33		0.33		0.33		0.33	
Full-Load Amps (115 volt)		0.8		1.3		1.9		2.8		2.9	
Normal Consumption (watts)		60		95		135		195		205	
Throw at 8' (2.4M) Mntg Ht - ft (M) [C]		35	(11)	39	(12)	48	(15)	60	(18)	73	(22)
Motor HP [D]	Standard	1/50		1/35		1/15		1/30		1/30	
	Optional Enclosed	--		1/15		1/15		1/8		1/8	
Motor RPM		1550		1550		1550		1050		1050	
Fan Diameter - in. (mm)		10	(254)	10	(254)	12	(305)	14	(356)	16	(406)
Air Volume - CFM (M^3/hr)		380	(646)	650	(1,104)	980	(1,665)	1,250	(2,124)	1,600	(2,718)
Outlet Velocity - FPM (M/s)		423	(2.1)	853	(4.3)	1,166	(5.9)	1,358	(6.9)	1,330	(6.8)
Approximate Net Wt - lbs (kg)		72	(33)	79	(36)	88	(40)	97	(44)	127	(58)
Approximate Shipping Wt - lbs (kg)		89	(40)	96	(44)	107	(49)	118	(54)	150	(68)

Size		165		200		250		300		400	
Heating Input - BTUH (kW)		165,000	(48.4)	200,000	(58.6)	250,000	(73.3)	300,000	(87.9)	400,000	(117.2)
Thermal Output - BTUH (kw) (80%) [A]		132,000	(38.7)	160,000	(46.9)	200,000	(58.6)	240,000	(70.3)	320,000	(93.8)
Vent Outlet Diameter		8" Oval		8" Oval		10" Oval		10" Oval		12" Oval	
Gas Connection - Natural Gas [B]		1/2"		1/2"		1/2"		3/4"		3/4"	
Control Amps (24-volt)		0.23		0.23		0.23		0.2		0.2	
Full-Load Amps (115 volt)		4		4		2.5		4		7	
Normal Consumption (watts)		275		300		280		375		565	
Throw at 8' (2.4M) Mntg Ht - ft (M) [C]		78	(24)	85	(26)	96	(29)	108	(33)	120	(37)
Motor HP [D]	Standard	1/20		1/20		1/6		1/4		1/2	
	Optional Enclosed	1/8		1/6		1/6		1/2		1/2	
Motor RPM		1050		1050		850		850		850	
Fan Diameter - in. (mm)		16	(406)	20	(508)	22	(559)	22	(559)	24	(610)
Air Volume - CFM (M^3/hr)		2,200	(3,738)	2,800	(4,757)	3,360	(5,708)	3,800	(6,456)	4,940	(8,393)
Outlet Velocity - FPM (M/s)		1,100	(5.6)	1,217	(6.2)	1,182	(6.0)	1,426	(7.2)	1,420	(7.2)
Approximate Net Wt - lbs (kg)		149	(68)	170	(77)	204	(93)	221	(100)	276	(125)

[A] For U.S. installations, ratings for altitudes to 2000 ft.. Above 2000 ft., derate by 4% for each 1000 ft. above sea level.
[A] For Canadian installations, ratings for altitudes to 2000 ft. High altitude units (2001-4500 ft.) are derated by 10% of maximum input.
[B] Gas connection for propane is 1/2" for all sizes. Sizes shown are for gas connection to a single-stage gas valve; NOT gas supply line size.
[C] Additional mounting heights shown later in this catalog.
[D] All other information in this table is based on a heater equipped with a standard 115v motor. (The standard motor for a Model 25 is an enclosed motor; all other standard motors are open motors. Optional enclosed motors are available in 115v only.)

BUILDING L HVAC # 1 - THROUGH 4
BUILDING M HVAC # 1 THROUGH 4
BUILDING N HVAC # 1 THROUGH 10

ARI* capacity ratings (cont)

ARI* CAPACITY RATINGS — 48HJ004-014

UNIT 48HJ	NOMINAL TONS	COOLING (Btuh)	TOTAL kW	SEER†	EER	SOUND RATING (decibels)	IPLV††
004	3	36,000	3.2	13.0	11.2**	76	N/A
005	4	46,000	4.1	13.0	11.1**	76	N/A
006	5	61,000	5.5	13.0	11.0**	80	N/A
007	6	73,000	6.7	—	11.0	80	N/A
008	7½	90,000	8.2	—	11.0	82	11.6
009	8½	103,000	8.9	—	11.6	82	12.8
012	10	120,000	10.9	—	11.0	84	11.4
014	12½	138,000	14.4	—	9.6	86	10.3

LEGEND

EER — Energy Efficiency Ratio
IPLV — Integrated Part-Load Value
SEER — Seasonal Energy Efficiency Ratio

*Air-Conditioning & Refrigeration Institute.
†Applies only to units with capacity of 65,000 Btuh or less.
**ARI does not require EER ratings for unit with capacity below 65,000 Btuh. For these units, the EER rating at ARI standard conditions is provided for information only.
††The IPLV is not applicable to single-compressor units.

NOTES:
1. Rated in accordance with ARI Standard 210-94 (004-006 units) or 360-93 (007-014 units).
2. Ratings are net values, reflecting the effects of circulating fan heat.
3. Ratings are based on:
   Cooling Standard: 80 F db, 67 wb indoor entering-air temperature and 95 F db outdoor entering-air temperature.
   IPLV Standard: 80 F db, 67 F wb indoor entering-air temperature and 80 F db outdoor entering-air temperature.
4. All 48HJ004-014 units are in compliance with ASHRAE 90.1 2001 Energy Standard for minimum SEER and EER requirements. Refer to state and local codes or visit the following website: http://solstice.crest.org/efficiency/bcap to determine if compliance with this standard pertains to a given geographical area of the United States.

HEATING CAPACITIES AND EFFICIENCIES — 48HJ004-014

208/230-1-60 — SINGLE-STAGE GAS HEAT

UNIT 48HJ	INPUT CAPACITY		OUTPUT CAPACITY		TEMPERATURE RISE (°F)	MINIMUM HEATING AIRFLOW (CFM)	EFFICIENCY		
	1st Stage	2nd Stage	1st Stage	2nd Stage			AFUE (%)	Steady State (%)	
E/R004	72,000	—	58,000	—	25-55	1004	82.8%	82.0	- BLD L
F/T004	115,000	—	90,000	—	55-85	1002	80.0%	80.0	
D/S005	72,000	—	58,000	—	25-55	1004	82.8%	82.0	
E/R005	115,000	—	92,000	—	35-65	1320	81.0%	81.0	- BLD M,N
F/T005	150,000	—	118,000	—	50-80	1396	80.4%	80.0	
D/S006	72,000	—	58,000	—	25-55	1004	82.8%	82.0	
E/R006	115,000	—	92,000	—	35-65	1327	81.0%	81.0	
F/T006	150,000	—	118,000	—	50-80	1314	80.4%	80.0	

208/230-1-60 — SINGLE-STAGE GAS HEAT — LOW NOx

UNIT 48HJ	INPUT CAPACITY		OUTPUT CAPACITY		TEMPERATURE RISE (°F)	MINIMUM HEATING AIRFLOW (CFM)	EFFICIENCY	
	1st Stage	2nd Stage	1st Stage	2nd Stage			AFUE (%)	Steady State (%)
M004	60,000	—	50,000	—	20-50	930	80.2%	81.2
N004	90,000	—	74,000	—	30-60	1150	81.0%	81.4
L005	60,000	—	50,000	—	20-50	930	80.2%	81.2
M005	90,000	—	74,000	—	30-60	1150	81.0%	81.4
N005	120,000	—	101,000	—	40-70	1340	80.7%	82.4
L006	60,000	—	50,000	—	20-50	930	80.2%	81.2
M006	90,000	—	74,000	—	30-60	1150	81.0%	81.4
N006	120,000	—	101,000	—	40-70	1340	80.7%	82.4

AFUE — Annual Fuel Utilization Efficiency

NOTE: Capacities for stainless steel heat exchanger units (S/R/T) are the same as standard units (D/E/F).

HEATING CAPACITIES AND EFFICIENCIES — 48HJ004-014 (cont)

208/230/460-3-60 — SINGLE-STAGE GAS HEAT — LOW NOx

UNIT 48HJ	INPUT CAPACITY		OUTPUT CAPACITY		TEMPERATURE RISE (°F)	MINIMUM HEATING AIRFLOW (CFM)	EFFICIENCY	
	1st Stage	2nd Stage	1st Stage	2nd Stage			AFUE (%)	Steady State (%)
M004	60,000	—	50,000	—	20-50	930	80.2%	81.2
N004	90,000	—	74,000	—	30-60	1150	81.0%	81.4
L005	60,000	—	50,000	—	20-50	930	80.2%	81.2
M005	90,000	—	74,000	—	30-60	1150	81.0%	81.4
N005	120,000	—	101,000	—	40-70	1340	80.7%	82.4
L006	60,000	—	50,000	—	20-50	930	80.2%	81.2
M006	90,000	—	74,000	—	30-60	1150	81.0%	81.4
N006	120,000	—	101,000	—	40-70	1340	80.7%	82.4

208/230/460-3-60 — SINGLE-STAGE GAS HEAT

UNIT 48HJ	INPUT CAPACITY		OUTPUT CAPACITY		TEMPERATURE RISE (°F)	MINIMUM HEATING AIRFLOW (CFM)	EFFICIENCY	
	1st Stage	2nd Stage	1st Stage	2nd Stage			AFUE (%)	Steady State (%)
H004	72,000	—	59,040	—	25-55	1000	82.0%	82.0
K004	115,000	—	93,150	—	55-85	1020	80.0%	81.0
G005	72,000	—	59,040	—	25-55	1000	82.0%	82.0
H005	115,000	—	93,150	—	30-60	1440	81.0%	81.0
K005	150,000	—	120,000	—	50-80	1390	80.0%	80.0
G006	72,000	—	59,040	—	25-55	1220	82.0%	82.0
H006	115,000	—	93,150	—	35-65	1330	81.0%	81.0
K006	150,000	—	120,000	—	50-80	1390	80.0%	80.0

208/230/460/575-3-60 — 2-STAGE GAS HEAT

UNIT 48HJ	INPUT CAPACITY		OUTPUT CAPACITY		TEMPERATURE RISE (°F)	MINIMUM HEATING AIRFLOW (CFM)	EFFICIENCY	
	1st Stage	2nd Stage	1st Stage	2nd Stage			AFUE (%)	Steady State (%)
E004	50,000	72,000	41,000	59,040	25-55	1004	82.8%	82.0
F004	82,000	115,000	65,600	93,150	55-85	1002	80.0%	80.0
D005	50,000	72,000	41,000	59,040	25-55	1094	82.8%	82.0
E005	82,000	115,000	66,420	93,150	35-65	1330	81.0%	81.0
F005	120,000	150,000	96,000	120,000	50-80	1390	80.4%	80.0
D006	50,000	72,000	41,000	59,040	25-55	1004	82.8%	82.0
E006	82,000	115,000	66,420	93,150	35-65	1330	81.0%	81.0
F006	120,000	150,000	96,000	120,000	50-80	1370	80.4%	80.0
D007	50,000	72,000	41,000	59,040	25-55	1220	82.0%	82.0
E007	82,000	115,000	66,420	93,150	35-65	1330	81.0%	81.0
F007	120,000	150,000	96,000	120,000	50-80	1390	80.0%	80.0
D008	90,000	125,000	73,800	102,500	20-50	1900	82.0%	82.0
E008	120,000	180,000	98,400	147,600	35-65	1440	82.0%	82.0
F008	180,000	224,000	147,600	183,680	45-75	2230	82.0%	82.0
D009	90,000	125,000	73,800	102,500	20-50	1900	82.0%	82.0
E009	120,000	180,000	98,400	147,600	35-65	1440	82.0%	82.0
F009	180,000	224,000	147,600	183,680	45-75	2230	82.0%	82.0
D012	120,000	180,000	98,400	147,600	35-65	1440	82.0%	82.0
E012	180,000	224,000	147,600	183,680	35-65	2570	82.0%	82.0
F012	200,000	250,000	160,000	200,000	40-70	2650	80.0%	80.0
D014	180,000	224,000	147,600	183,680	35-65	2570	82.0%	82.0
E014	200,000	250,000	160,000	200,000	40-70	2650	80.0%	80.0

BLD-N

AFUE — Annual Fuel Utilization Efficiency

NOTE: Capacities for stainless steel heat exchanger units (S/R/T) are the same as standard units (D/E/F).

BUILDING M - HVAC 05
BUILDING P - HVAC 02 THROUGH 05

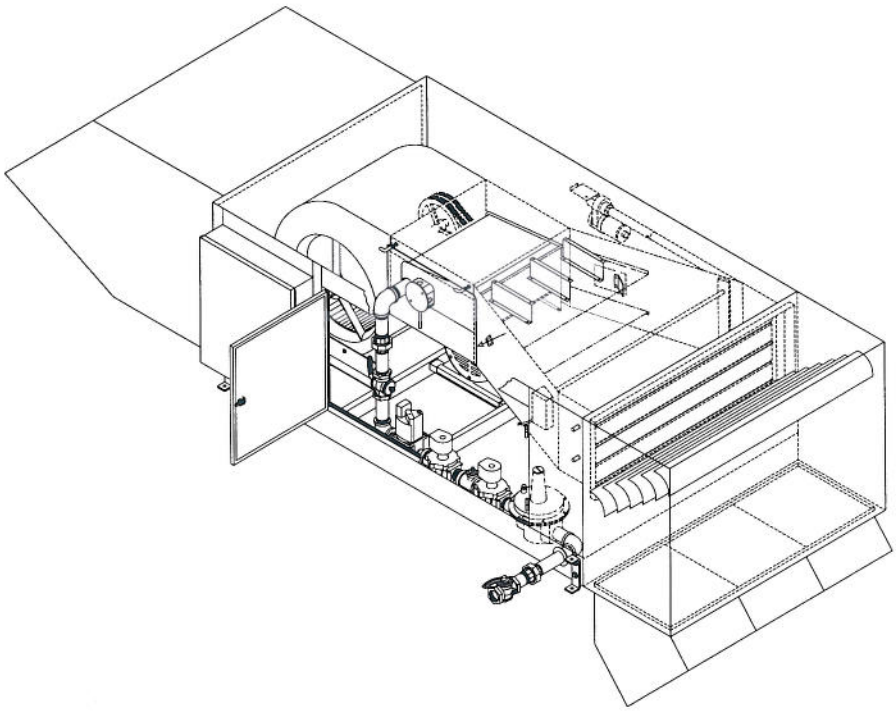

Cambridge® S-Series
Direct Gas-Fired
Blow-Thru® Space Heaters

400 to 3,400 MBH Capacities
Complete Heater Packages & Options

CAMBRIDGE® ENGINEERING INC
More heat, less energy

760 Long Road Crossing Dr., Chesterfield MO 63005
(636) 532-2233 • (800) 899-1989 • Fax (636) 530-6133
www.cambridge-eng.com

ASHRAE 90.1 COMPLIANT

ENERGY STAR PARTNER

Copyright © 2011 Cambridge Engineering, Inc. All Rights Reserved

Typical Capacity Selection
For Standard Mounting Packages[3] at sea level

Series	Motor HP	Units without Filter Sections						Units with Filter Sections[2]					
		160°F Rise[4]			140°F Rise[4]			160°F Rise[4]			140°F Rise[4]		
		Input MBH[5]	Inlet cfm	TESP[1] "WC	Input MBH[5]	Inlet cfm	TESP[1] "WC	Input MBH[5]	Inlet cfm	TESP[1] "WC	Input MBH[5]	Inlet cfm	TESP[1] "WC
S400	1	400	1,850	.13	400	2,210	.16	400	1,850	.25	400	2,210	.30
S800	3	757	3,500	.39	634	3,500	.39	735	3,400	.72	616	3,400	.72
S950	2	950	4,400	.22	950	5,250	.27	950	4,400	.31	900	4,970	.34
	3										950	5,250	.39
S1200	3	1200	5,555	.26	1064	5,875	.30	1200	5,555	.44	1023	5,650	.45
	5				1200	6,625	.42				1200	6,625	.75
S1600	5	1499	6,940	.50	1257	6,940	.50	1458	6,750	.75	1223	6,750	.75
S1850	5	1850	8,565	.19	1773	9,790	.23	1850	8,565	.25	1757	9,700	.30
	7½				1850	10,215	.24				1850	10,215	.31
S2200	7½	2200	10,185	.21	2065	11,400	.26	2200	10,185	.32	2028	11,200	.40
	10				2200	12,145	.31				2200	12,145	.48
S3200	10	2718	12,585	.36	2279	12,585	.36	2678	12,400	.48	2246	12,400	.48
	15	3107	14,380	.54	2604	14,380	.54	3046	14,100	.84	2554	14,100	.84

[1]Total External Static Pressure (TESP) is the total of all airflow resistances (in inches WC) from Mounting Package components. Any other system air flow resistances such as ductwork should be added to the above TESP figures.
[2]Pressure losses given for air filters in clean condition.
[3]For Indoor Vertical Mounting Package ratings, consult factory.
[4]The MBH and cfm ratings are based upon a discharge temperature of 160°F.
[5]Heater Input Capacity: $Btu/hr = cfm \times \rho \times c_p \times 60 \times \Delta T \div 0.92$

Where: **cfm** is the inlet air volume of the blower
ρ is the density[6] of the air handled by the blower (lb/ft^3)
c_p is the specific heat of the air (0.240 Btu/lb °F)
60 is the conversion from minutes to hours
ΔT is the temperature rise (160°F Max.)
0.92 is the conversion from sensible to total heat (output to input)

[6]Density is calculated from the following formula: $\rho = 1.32605 \times$ (barometric pressure ÷ °R)
Where: barometric pressure is in terms of inches of mercury ("Hg) and °R = (460 + T_{Inlet} °F)

Series	Gas Inlet Size	Supply Pressure[8] Capacities - Natural Gas[9] (MBH)								
		6"WC	7"WC	8"WC	9"WC	10"WC	11"WC	12"WC	13"WC	14"WC
S400	¾"	390	400							
S800	1"	485	535	585	630	665	705	745	780	800
S950	1"	740	810	890	950					
S1200	1¼"	900	990	1060	1190	1200				
S1600	1½"	990	1100	1230	1310	1400	1480	1550	1600	
S1850	1½"	1380	1540	1720	1830	1850				
S2200	1½"	1500	1660	1830	2020	2200				
S3200	1½"[7]	1660	1960	2200	2420	2600	2800	3000	3140	3200

[7]On S3200 heaters with Gas Supply Pressure below 1 psi or over 5 psi with a high pressure regulator, the inlet pipe size is increased to 2".
[8]Positive shut-off pressure regulators are required when gas supply pressure exceeds 14" WC for Series S400; 1 psi for Series S800, S950 and S1200; 2 psi for Series S1600; and 5 psi for Series S1850, S2200 and S3200.
[9]Consult factory for LP gas requirements.

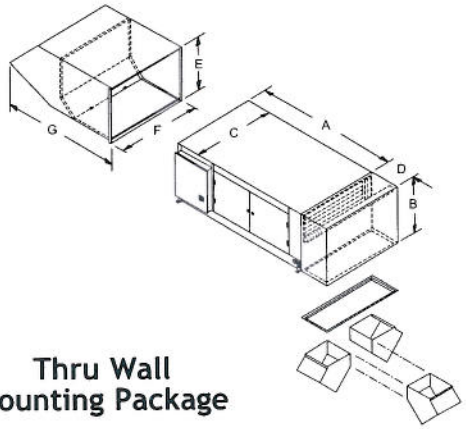

Thru Wall Mounting Package

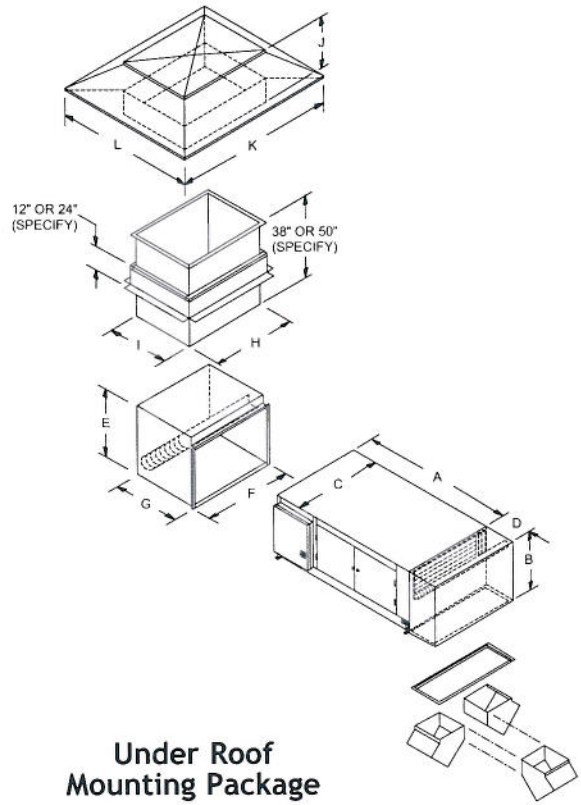

Under Roof Mounting Package

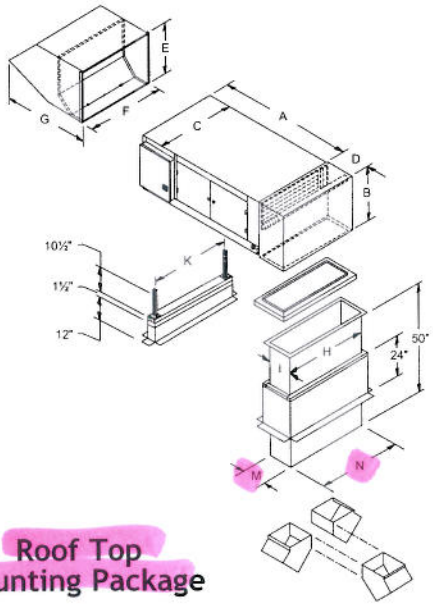

Roof Top Mounting Package

Mounting Package	Series	Dimensions														Weight (lbs.)
		A	B	C	D	E	F	G	H	I	J	K	L	M	N	
Thru Wall	S400/800	60"	25½"	25½"	13"	24"	23½"	57¾"								550
	S950/1200/1600	72"	28"	42"	15"	27"	40¼"	60"								800
	S1850/2200/3200	80"	37½"	47"	24¾"	36¾"	45¼"	72"								1500
Roof Top	S400/800	60"	25½"	25½"	13"	24"	23½"	36¾"	22¼"	11"		25½"		11"	22¼"	600
	S950	72"	28"	42"	15"	27"	40¼"	39"	39½"	13"		42"		11"	33⅜"	900
	S1200/1600	72"	28"	42"	15"	27"	40¼"	39"	39½"	13"		42"		13"	39½"	900
	S1850	80"	37½"	47"	24¾"	36¾"	45¼"	51"	44¾"	22¼"		47"		22¼"	33⅜"	1650
	S2200/3200	80"	37½"	47"	24¾"	36¾"	45¼"	51"	44¾"	22¼"		47"		22¼"	44¾"	1650
Under Roof	S400/800	60"	25½"	25½"	13"	27½"	23¼"	26½"	23"	23"	24"	60"	60"			750
	S950/1200/1600	72"	28"	42"	15"	30¼"	39½"	31¼"	39½"	28"	24"	76¼"	65½"			1150
	S1850/2200/3200	80"	37½"	47"	24¾"	40"	45¼"	38½"	45"	35½"	32"	90"	80½"			1900

Genuine Cambridge® Heaters

Direct Gas-Fired

Space Heating

BLOW-THRU® SPACE HEATER

- 200 to 3400 MBH
- Up to 14,400 CFM
- Natural Gas, LP Gas or Propane Air Burners

MOST ENERGY EFFICIENT WAY TO HEAT:

- Warehouses
- Distribution Centers
- Manufacturing Plants
- Indoor Sports Facilities
- Boat Storage Buildings
- Auto Dealership Service Bays
- Aircraft Hangars/Service Areas

GENUINE CAMBRIDGE® "Nothing Else Like It"

- Building Studies and Energy Modeling document 40% to 70% energy savings
- Blow-Thru® Space Heating Technology
- Improves indoor air quality with fresh air
- 160°F temperature rise at 0°F
- 160°F discharge temperature at 0°F
- Proprietary stainless steel burner manufactured by Cambridge and only available in a Genuine Cambridge® heater
- Patented Low Fire Start technology increases reliability and saves energy
- 100% E_c combustion efficiency (no flue or heat exchanger losses)
- 92% E_t thermal efficiency (equivalent AFUE rating)
- High quality construction designed to outperform and outlast the competition
- Exclusive 5 year burner warranty
- Industry leader with 45+ years direct gas-fired experience and over 1 billion square feet heated in recent years
- Recommended for green, high performance, LEED buildings
- Pre-Qualified for EPAct Federal tax deductions

ASHRAE 90.1 COMPLIANT

S-Series

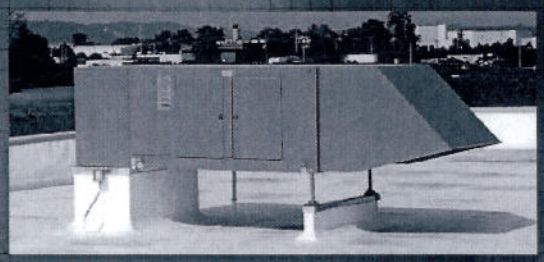

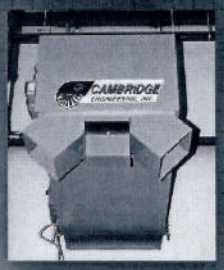

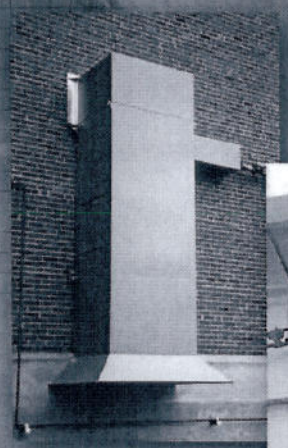

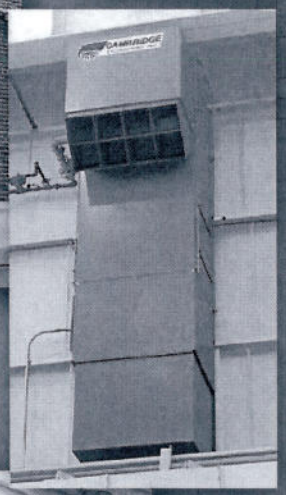

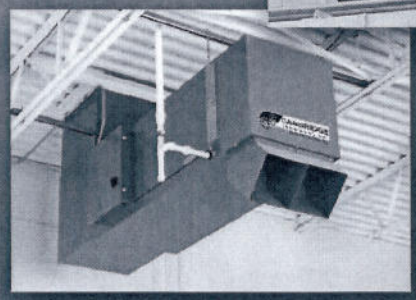

CAMBRIDGE ENGINEERING INC®
More heat, less energy

www.cambridge-eng.com

Cambridge Engineering, Inc.
760 Long Road Crossing Dr.
Chesterfield, MO 63005
800.899.1989 · Fax 636.530.6133

Copyright © 2011 Cambridge Engineering, Inc. All rights reserved.

GENERAL PERFORMANCE DATA

BUILDING P HVAC 01
250K BTU MODINE 2"x3" EXHAUST

Table 28.1
General Performance Data - Models With Blower

Model Size (Digits 4-6)	75		100		125		150		175	
Btu/Hr Input ①	75000	75000	100000	100000	125000	125000	150000	150000	175000	1750
Btu/Hr Output ①	60000	60000	80000	80000	100000	100000	120000	120000	140000	1400
Blower Style (Digit 16 Letter)	A or B	C or D	C or D	E or F	C or D	E or F	C or D	E or F	C or D	E or
Max. Temp. Rise (°F)	100	100	100	85	100	100	100	100	100	10
Min. Temp. Rise (°F)	28	20	21	20	27	20	33	20	39	2
Max. CFM	1980	2778	3450	3704	3450	4630	3350	5556	3350	55
Min. CFM ②	556	556	741	875	926	926	1111	1111	1296	12

Model Size (Digits 4-6)	200			225			250		
Btu/Hr Input ①	200000	200000	200000	225000	225000	225000	250000	250000	250000
Btu/Hr Output ①	160000	160000	160000	180000	180000	180000	200000	200000	200000
Blower Style (Digit 16 Letter)	C or D	E or F	G or H	C or D	E or F	G or H	E or F	G or H	I, J, or K
Max. Temp. Rise (°F)	100	85	85	100	95	95	100	100	96
Min. Temp. Rise (°F)	44	28	23	49	32	26	31	26	20
Max. CFM	3400	5250	6500	3400	5250	6500	6000	7250	9259
Min. CFM ②	1481	1750	1750	1667	1750	1750	1852	1852	1925

Model Size (Digits 4-6)	300			350			400		
Btu/Hr Input ①	300000	300000	300000	350000	350000	350000	400000	400000	400000
Btu/Hr Output ①	240000	240000	240000	280000	280000	280000	320000	320000	320000
Blower Style (Digit 16 Letter)	E or F	G or H	I, J, or K	E or F	G or H	I, J, or K	E or F	G or H	I, J, or K
Max. Temp. Rise (°F)	100	100	100	100	100	100	100	100	100
Min. Temp. Rise (°F)	37	31	20	45	37	22	52	42	25
Max. CFM	6000	7250	11111	5700	7000	12000	5700	7000	12000
Min. CFM ②	2222	2222	2222	2593	2593	2593	2963	2963	2963

Model Size (Digits 4-6)	500			600			700		
Btu/Hr Input ①	500,000	500,000	500,000	600,000	600,000	600,000	700,000	700,000	700,000
Btu/Hr Output ①	400,000	400,000	400,000	480,000	480,000	480,000	560,000	560,000	560,000
Blower Style (Digit 16 Letter)	G or H	I, J, or K	L	G or H	I, J, or K	L	G or H	I, J, or K	L
Max. Temp. Rise (°F)	120	120	120	120	120	120	120	120	120
Min. Temp. Rise (°F)	53	40	40	63	40	40	76	40	40
Max. CFM	7000	9259	9259	7000	11111	11111	6850	12963	12963
Min. CFM ②	3086	3086	3086	3704	3704	3704	4321	4321	4321

Model Size (Digits 4-6)	800			840		960	
Btu/Hr Input ①	800,000	800,000	800,000	1,050,000	1,050,000	1,200,000	1,200,000
Btu/Hr Output ①	640,000	640,000	640,000	840,000	840,000	960,000	960,000

:NERAL PERFORMANCE DATA

le 29.1
Temperature Rise

Btu/Hr ① put	Output	Air Temperature 20 Max	25	30	35	40	45	50
000	60,000	2778	2222	1852	1587	1389	1235	1111
,000	80,000	3704	2963	2469	2116	1852	1646	1481
,000	100,000	4630	3704	3086	2646	2315	2058	1852
,000	120,000	5556	4444	3704	3175	2778	2469	2222
,000	140,000	-	5185	4321	3704	3241	2881	2593
,000	160,000	-	5926	4938	4233	3704	3292	2963
,000	180,000	-	6667	5556	4762	4167	3704	3333
,000	200,000	9259	7407	6173	5291	4630	4115	3704
,000	240,000	11111	8889	7407	6349	5556	4938	4444
,000	280,000	-	10370	8642	7407	6481	5761	5185
,000	320,000	-	11852	9877	8466	7407	6584	5926

Btu/Hr ① ut	Output	Air Temperature 40 Max	45	50	55	60	65	70
,000	400,000	9259	8230	7407	6734	6173	5698	5291
,000	480,000	11111	9877	8889	8081	7407	6838	6349
,000	560,000	12963	11523	10370	9428	8642	7977	7407
,000	640,000	14500	13000	11852	10774	9877	9117	8466
,000	840,000	-	-	-	-	12963	11966	11111
,000	960,000	-	-	-	-	-	13675	12698

ttings are shown for elevations up to 2000 ft. For higher elevations the input rat
nada, in elevations between 2000 and 4500 feet, the unit must be derated to 9

r Variable Air Movement Applications, see page 18.

emperature Limits

naximum allowable discharge air temperature is 150°F. The m
erature Rise Units is 60°F. All system units are designed for a

BUILDING P - YORK UNITS (4 UNITS) (SIMILAR)

2" x 3" EXHAUST

Physical Data

ZF036-060 Physical Data

Component	Models											
	ZF036				ZF048				ZF060			
Nominal Tonnage	**3.0**				**4.0**				**5.0**			
AHRI COOLING PERFORMANCE												
Gross Capacity @ AHRI A point (Btu)	37000				49300				59000			
AHRI net capacity (Btu)	35500				47500				56500			
EER	11.0				11.0				10.8			
SEER	13.0				13.0				13.0			
IPLV	-				-				-			
Nominal CFM	1200				1500				1750			
System power (KW)	3.23				4.32				5.23			
Refrigerant type	R-410A				R-410A				R-410A			
Refrigerant charge (lb-oz)												
System 1	4-4				5-8				5-8			
AHRI HEATING PERFORMANCE												
Heating model	N04	N08	D06	D10	N06	N10	D06	D10	N08	N10	D06	D10
Heat input (K Btu)	50	100	75	115	75	125	75	125	100	125	75	125
Heat output (K Btu)	40	80	60.8	92	60	100	60.8	100.6	80	100	60.8	100.6
AFUE %	80.9	80.5	-	-	80.9	80.3	-	-	80.5	80.3	-	-
Steady state efficiency (%)	-	-	81.1	80.2	-	-	81.1	80.5	-	-	81.1	80.5
No. burners	2	4	3	5	3	5	3	5	4	5	3	5
No. stages	1	1	2	2	1	1	2	2	1	1	2	2
Temperature Rise Range (°F)	15-45	45-75	35-70	55-90	25-70	45-75	25-70	45-75	25-55	35-75	20-55	35-75
Gas Limit Setting (°F) - Direct Drive	240	170	210	200	210	165	210	165	170	165	210	165
Gas Limit Setting (°F) - Belt Drive	240	210	240	200	240	210	240	210	210	210	210	210
Gas piping connecting (in.)	1/2	1/2	1/2	1/2	1/2	1/2	1/2	1/2	1/2	1/2	1/2	1/2
DIMENSIONS (inches)												
Length	82 1/4				82 1/4				82 1/4			
Width	44 7/8				44 7/8				44 7/8			
Height	32 5/8				32 5/8				32 5/8			
OPERATING WT. (lbs.)	468				541				569			
COMPRESSORS												
Type	Recip				Recip				Recip			
Quantity	1				1				1			
Unit Capacity Steps (%)	100				100				100			
CONDENSER COIL DATA												
Face area (Sq. Ft.)	16.3				16.3				16.3			
Rows	1				1				1			
Fins per inch	23				23				23			
Tube diameter (in.)	0.71 / 18				0.71 / 18				0.71 / 18			
Circuitry Type	2-pass Microchannel				2-pass Microchannel				2-pass Microchannel			
EVAPORATOR COIL DATA												
Face area (Sq. Ft.)	5.06				5.06				5.06			
Rows	3				3				4			
Fins per inch	13				13				13			
Tube diameter	0.375				0.375				0.375			
Circuitry Type	Intertwined				Intertwined				Intertwined			
Refrigerant control	Orifice				Orifice				Orifice			

Appendix D

DEQ Forms

DEQ AIR QUALITY PROGRAM
1410 N. Hilton, Boise, ID 83706
For assistance, call the
Air Permit Hotline – 1-877-5PERMIT

Cover Sheet for Air Permit Application – Permit to Construct **Form CSPTC**

Please see instructions on page 2 before filling out the form.

COMPANY NAME, FACILITY NAME, AND FACILITY ID NUMBER

1. Company Name	Nunhems USA, Inc.		
2. Facility Name	Nunhems Parma	3. Facility ID No.	
4. Brief Project Description - One sentence or less	Minor source permit for existing carrot and onion seed processing facility		

PERMIT APPLICATION TYPE

5. ☐ New Source ☐ New Source at Existing Facility ☐ PTC for a Tier I Source Processed Pursuant to IDAPA 58.01.01.209.05.c
☒ Unpermitted Existing Source ☐ Facility Emissions Cap ☐ Modify Existing Source: Permit No.:_____ Date Issued:_____
☐ Required by Enforcement Action: Case No.:_____

6. ☒ Minor PTC ☐ Major PTC

FORMS INCLUDED

Included	N/A	Forms		DEQ Verify
☒	☐	Form CSPTC – Cover Sheet		☐
☒	☐	Form GI – Facility Information		☐
☒	☐	Form EU0 – Emissions Units General		☐
☒	☐	Form EU1– Industrial Engine Information	Please specify number of EU1s attached: 3	☐
☐	☒	Form EU2– Nonmetallic Mineral Processing Plants	Please specify number of EU2s attached: _____	☐
☐	☒	Form EU3– Spray Paint Booth Information	Please specify number of EU3s attached: _____	☐
☐	☒	Form EU4– Cooling Tower Information	Please specify number of EU3s attached: _____	☐
☐	☒	Form EU5 – Boiler Information	Please specify number of EU4s attached: _____	☐
☐	☒	Form CBP– Concrete Batch Plant	Please specify number of CBPs attached: _____	☐
☐	☒	Form HMAP – Hot Mix Asphalt Plant	Please specify number of HMAPs attached: _____	☐
☐	☒	PERF – Portable Equipment Relocation Form		☐
☐	☒	Form AO – Afterburner/Oxidizer		☐
☐	☒	Form CA – Carbon Adsorber		☐
☐	☒	Form CYS – Cyclone Separator		☐
☐	☒	Form ESP – Electrostatic Precipitator		☐
☒	☐	Form BCE– Baghouses Control Equipment		☐
☐	☒	Form SCE– Scrubbers Control Equipment		☐
☐	☒	Form VSCE – Venturi Scrubber Control Equipment		☐
☐	☒	Form CAM – Compliance Assurance Monitoring		☐
☒	☐	Forms EI-– Emissions Inventory		☐
☒	☐	PP – Plot Plan		☐
☒	☐	Forms MI1 – MI4 – Modeling	(Excel workbook, all 4 worksheets)	☐
☒	☐	Form FRA – Federal Regulation Applicability		☐

DEQ AIR QUALITY PROGRAM
1410 N. Hilton, Boise, ID 83706
For assistance, call the
Air Permit Hotline: 1-877-5PERMIT

General Information **Form GI**
Revision 7
6/29/12

Please see instructions on back page before filling out the form. All information is required. If information is missing, the application will not be processed.

Identification

1. Facility name Nunhems USA, Inc

2. Existing facility identification number

☐ **Check if new facility (not yet operating)**

3. Brief project description Minor source permit for existing carrot and onion seed processing facility

Facility Information

4. Primary facility permitting contact name Shane Roe **Contact type** Facility permitting contact

Telephone number 208-936-5726 **E-mail** shane.roe@bayer.com

5. Alternate facility permitting contact name Mark Gallegos **Alternate contact type** Responsible official

Telephone number 208-707-2357 **E-mail** mark.gallegos@bayer.com

6. Mailing address where permit will be sent (street/city/county/state/zip code) 1200 Anderson Corner Road, Parma, Idaho, 83660

7. Physical address of permitted facility (if different than mailing address) (street/ city/county/state/zip code)

8. Is the equipment portable? ☐ **Yes*** ☒ **No** ***If yes, complete and attach PERF; see instructions.**

9. NAICS codes: Primary NAICS 115114 **Secondary NAICS**

10. Brief business description and principal product produced agriculture seed processing, storage, and shipping facility

11. Identify any adjacent or contiguous facility this company owns and/or operates

12. Specify type of application ☒ **Permit to construct (PTC); application fee of $1,000 required. See instructions.**

☐ **Tier I permit** ☐ **Tier II permit** ☐ **Tier II/Permit to construct**

For Tier I permitted facilities only: If you are applying for a PTC then you must also specify how the PTC will be incorporated into the Tier I permit.

☐ **Co-process Tier I modification and PTC** ☐ **Incorporate PTC at the time of Tier I renewal** ☐ **Administratively amend the Tier I permit to incorporate the PTC upon applicant's request (IDAPA 58.01.01.209.05.a, b, or c)**

Certification

In accordance with IDAPA 58.01.01.123 (Rules for the Control of Air Pollution in Idaho), I certify based on information and belief formed after reasonable inquiry, the statements and information in the document(s) are true, accurate, and complete.

13. Responsible official's name Tracy Landry **Official's title** Secretary

Official's address 1200 Anderson Corner Road, Parma, Idaho 83660

Telephone number 208.674.4000 **E-mail** tracy.landry@bayer.com

Official's signature Tracy Landry **Date** 4/15/15

☒ **14. Check here to indicate that you want to review the draft permit before final issuance.**

DEQ AIR QUALITY PROGRAM
1410 N. Hilton, Boise, ID 83706
For assistance, call the
Air Permit Hotline – 1-877-5PERMIT

AIR PERMIT APPLICATION

Revision 6
10/7/09

For each box in the table below, CTRL+click on the blue underlined text for instructions and information.

IDENTIFICATION	
1. Company Name:	2. Facility Name:
Nunhems USA, Inc.	Nunhems Parma
3. Brief Project Description:	Minor source permit for existing seed processing facility

APPLICABILITY DETERMINATION	
4. List applicable subparts of the New Source Performance Standards (NSPS) (40 CFR part 60). Examples of NSPS affected emissions units include internal combustion engines, boilers, turbines, etc. The applicant must thoroughly review the list of affected emissions units.	List of applicable subpart(s): IIII ☐ Not Applicable
5. List applicable subpart(s) of the National Emission Standards for Hazardous Air Pollutants (NESHAP) found in 40 CFR part 61 and 40 CFR part 63. Examples of affected emission units include solvent cleaning operations, industrial cooling towers, paint stripping and miscellaneous surface coating. EPA has a web page dedicated to NESHAP that should be useful to applicants.	List of applicable subpart(s): ZZZZ ☐ Not Applicable
6. For each subpart identified above, conduct a complete a regulatory analysis using the instructions and referencing the example provided on the following pages. **Note** - Regulatory reviews must be submitted with sufficient detail so that DEQ can verify applicability and document in legal terms why the regulation applies. Regulatory reviews that are submitted with insufficient detail will be determined incomplete.	☑ A detailed regulatory review is provided (Follow instructions and example). ☐ DEQ has already been provided a detailed regulatory review. Give a reference to the document including the date.

IF YOU ARE UNSURE HOW TO ANSWER ANY OF THESE QUESTIONS, CALL THE AIR PERMIT HOTLINE AT 1-877-5PERMIT

It is emphasized that it is the applicant's responsibility to satisfy all technical and regulatory requirements, and that DEQ will help the applicant understand what those requirements are prior to the application being submitted but that DEQ will not perform the required technical or regulatory analysis on the applicant's behalf.

DEQ AIR QUALITY PROGRAM
1410 N. Hilton, Boise, ID 83706
For assistance, call the
Air Permit Hotline – 1-877-5PERMIT

Baghouse Control Equipment **Form BCE**
Revision 6
2/18/10

Complete this form for each baghouse. Please see instructions on page 2 before filling out the form.

IDENTIFICATION

1. Company Name	2. Facility Name:
Nunhems USA, Inc	Nunhems Parma

3. Brief Project Description: Minor source permit for existing carrot and onion seed processing facility

BAGHOUSE INFORMATION

4. Baghouse Manufacturer: Carothers and Son, LTD	5. Baghouse Model: CSL 300 TR 12 HEI	6. Baghouse Equipment ID: DC01

7 (a). Baghouse particulate matter emission concentration. **Note: Provide information in 7(a)-(c) or answer question #8 below.**	0.0007 gr/dscf	*Manufacturers typically provide guarantees in grains per dry standard cubic foot (gr/dscf). Provide a copy of the guarantee, or other documentation, with the application along with a description of the types of bags that must be used to achieve the emission concentration.* ***Emission concentrations less than 0.01 gr/dscf will receive additional scrutiny by DEQ and a source test of the baghouse may be required.*** *If a guarantee is not provided then you must document how you obtained the emission concentration. Without documentation the application is not complete.*
7 (b). Percentage PM_{10} Or Provide PM_{10} Emission Concentration	99.995 % _____ gr/dscf	*What percentage of the PM concentration listed in question #7(a) is PM_{10}. You must provide documentation as to how the percentage was determined (i.e per the baghouse manufacturer). Without documentation the application is not complete.*
7 (c). Baghouse flow rate	34,900 dscfm	*Provide the baghouse flow rate in dry standard cubic feet per minute. Actual cubic feet per minute may be given in lieu of dscfm* ***if it is documented*** *that moisture content is insignificant. You must provide documentation as to how this flow rate was determined (i.e. per the exhaust fan manufacturer, combustion evaluation, etc.). Without documentation the application is not complete.*
8. Baghouse particulate matter control efficiency. **Note: Not needed if section #7 is completed.**	_____ % PM control _____ % PM_{10} control	*Applicant's providing the control efficiency of the baghouse must provide control efficiency for both PM and PM_{10}. Provide a copy of the control efficiency documentation with the application. Documentation must include a description of the types of bags that must be used to achieve the control efficiency. Without documentation the application is not complete.*
9. Is the baghouse equipped with a bag leak detector?	☐ Yes ☒ No	*If a bag leak detector is installed provide documentation on the leak detector, including; how the leak detector functions and what level of the output signal indicates that a bag is leaking. Without documentation the application is not complete.*

DEQ AIR QUALITY PROGRAM
1410 N. Hilton, Boise, ID 83706
For assistance, call the
Air Permit Hotline – 1-877-5PERMIT

Baghouse Control Equipment **Form BCE**
Revision 6
2/18/10

Complete this form for each baghouse. Please see instructions on page 2 before filling out the form.

IDENTIFICATION

1. Company Name	2. Facility Name:
Nunhems USA, Inc	Nunhems Parma

3. Brief Project Description: Minor source permit for existing carrot and onion seed processing facility

BAGHOUSE INFORMATION

4. Baghouse Manufacturer: Carothers and Son, LTD	5. Baghouse Model: CSL 300 TR 12 HEI	6. Baghouse Equipment ID: DC02

7 (a). Baghouse particulate matter emission concentration. **Note: Provide information in 7(a)-(c) or answer question #8 below.**	0.0007 gr/dscf	*Manufacturers typically provide guarantees in grains per dry standard cubic foot (gr/dscf). Provide a copy of the guarantee, or other documentation, with the application along with a description of the types of bags that must be used to achieve the emission concentration.* ***Emission concentrations less than 0.01 gr/dscf will receive additional scrutiny by DEQ and a source test of the baghouse may be required.*** *If a guarantee is not provided then you must document how you obtained the emission concentration. Without documentation the application is not complete.*
7 (b). Percentage PM_{10} Or Provide PM_{10} Emission Concentration	99.995 % _____ gr/dscf	*What percentage of the PM concentration listed in question #7(a) is PM_{10}. You must provide documentation as to how the percentage was determined (i.e per the baghouse manufacturer). Without documentation the application is not complete.*
7 (c). Baghouse flow rate	34,900 dscfm	*Provide the baghouse flow rate in dry standard cubic feet per minute. Actual cubic feet per minute may be given in lieu of dscfm* ***if it is documented*** *that moisture content is insignificant. You must provide documentation as to how this flow rate was determined (i.e. per the exhaust fan manufacturer, combustion evaluation, etc.). Without documentation the application is not complete.*
8. Baghouse particulate matter control efficiency. **Note: Not needed if section #7 is completed.**	_____ % PM control _____ % PM_{10} control	*Applicant's providing the control efficiency of the baghouse must provide control efficiency for both PM and PM_{10}. Provide a copy of the control efficiency documentation with the application. Documentation must include a description of the types of bags that must be used to achieve the control efficiency. Without documentation the application is not complete.*
9. Is the baghouse equipped with a bag leak detector?	☐ Yes ☒ No	*If a bag leak detector is installed provide documentation on the leak detector, including; how the leak detector functions and what level of the output signal indicates that a bag is leaking. Without documentation the application is not complete.*

DEQ AIR QUALITY PROGRAM
1410 N. Hilton, Boise, ID 83706
For assistance, call the
Air Permit Hotline – 1-877-5PERMIT

Baghouse Control Equipment **Form BCE**
Revision 6
2/18/10

Complete this form for each baghouse. Please see instructions on page 2 before filling out the form.

IDENTIFICATION

1. Company Name	2. Facility Name:
Nunhems USA, Inc	Nunhems Parma

3. Brief Project Description: Minor source permit for existing carrot and onion seed processing facility

BAGHOUSE INFORMATION

4. Baghouse Manufacturer: Carothers and Son, LTD	5. Baghouse Model: CSL 300 TR 12 HEI	6. Baghouse Equipment ID: DC03

7 (a). Baghouse particulate matter emission concentration. **Note: Provide information in 7(a)-(c) or answer question #8 below.**	0.0007 gr/dscf	*Manufacturers typically provide guarantees in grains per dry standard cubic foot (gr/dscf). Provide a copy of the guarantee, or other documentation, with the application along with a description of the types of bags that must be used to achieve the emission concentration.* ***Emission concentrations less than 0.01 gr/dscf will receive additional scrutiny by DEQ and a source test of the baghouse may be required.*** *If a guarantee is not provided then you must document how you obtained the emission concentration. Without documentation the application is not complete.*
7 (b). Percentage PM_{10} Or Provide PM_{10} Emission Concentration	99.995 % _____ gr/dscf	*What percentage of the PM concentration listed in question #7(a) is PM_{10}. You must provide documentation as to how the percentage was determined (i.e per the baghouse manufacturer). Without documentation the application is not complete.*
7 (c). Baghouse flow rate	35,000 dscfm	*Provide the baghouse flow rate in dry standard cubic feet per minute. Actual cubic feet per minute may be given in lieu of dscfm* ***if it is documented*** *that moisture content is insignificant. You must provide documentation as to how this flow rate was determined (i.e. per the exhaust fan manufacturer, combustion evaluation, etc.). Without documentation the application is not complete.*
8. Baghouse particulate matter control efficiency. **Note: Not needed if section #7 is completed.**	_____ % PM control _____ % PM_{10} control	*Applicant's providing the control efficiency of the baghouse must provide control efficiency for both PM and PM_{10}. Provide a copy of the control efficiency documentation with the application. Documentation must include a description of the types of bags that must be used to achieve the control efficiency. Without documentation the application is not complete.*
9. Is the baghouse equipped with a bag leak detector?	☐ Yes ☒ No	*If a bag leak detector is installed provide documentation on the leak detector, including; how the leak detector functions and what level of the output signal indicates that a bag is leaking. Without documentation the application is not complete.*

DEQ AIR QUALITY PROGRAM
1410 N. Hilton, Boise, ID 83706
For assistance, call the
Air Permit Hotline – 1-877-5PERMIT

Baghouse Control Equipment **Form BCE**
Revision 6
2/18/10

Complete this form for each baghouse. Please see instructions on page 2 before filling out the form.

IDENTIFICATION

1. Company Name	2. Facility Name:
Nunhems USA, Inc	Nunhems Parma

3. Brief Project Description: Minor source permit for existing carrot and onion seed processing facility

BAGHOUSE INFORMATION

4. Baghouse Manufacturer: Carothers and Son, LTD	5. Baghouse Model: CSL 300 TR 12 HEI	6. Baghouse Equipment ID: DC04

7 (a). Baghouse particulate matter emission concentration. **Note: Provide information in 7(a)-(c) or answer question #8 below.**	0.0007 gr/dscf	*Manufacturers typically provide guarantees in grains per dry standard cubic foot (gr/dscf). Provide a copy of the guarantee, or other documentation, with the application along with a description of the types of bags that must be used to achieve the emission concentration.* ***Emission concentrations less than 0.01 gr/dscf will receive additional scrutiny by DEQ and a source test of the baghouse may be required.*** *If a guarantee is not provided then you must document how you obtained the emission concentration. Without documentation the application is not complete.*
7 (b). Percentage PM_{10} Or Provide PM_{10} Emission Concentration	99.995 % _____ gr/dscf	*What percentage of the PM concentration listed in question #7(a) is PM_{10}. You must provide documentation as to how the percentage was determined (i.e per the baghouse manufacturer). Without documentation the application is not complete.*
7 (c). Baghouse flow rate	12,800 dscfm	*Provide the baghouse flow rate in dry standard cubic feet per minute. Actual cubic feet per minute may be given in lieu of dscfm* ***if it is documented*** *that moisture content is insignificant. You must provide documentation as to how this flow rate was determined (i.e. per the exhaust fan manufacturer, combustion evaluation, etc.). Without documentation the application is not complete.*
8. Baghouse particulate matter control efficiency. **Note: Not needed if section #7 is completed.**	_____ % PM control _____ % PM_{10} control	*Applicant's providing the control efficiency of the baghouse must provide control efficiency for both PM and PM_{10}. Provide a copy of the control efficiency documentation with the application. Documentation must include a description of the types of bags that must be used to achieve the control efficiency. Without documentation the application is not complete.*
9. Is the baghouse equipped with a bag leak detector?	☐ Yes ☒ No	*If a bag leak detector is installed provide documentation on the leak detector, including; how the leak detector functions and what level of the output signal indicates that a bag is leaking. Without documentation the application is not complete.*

DEQ AIR QUALITY PROGRAM
1410 N. Hilton, Boise, ID 83706
For assistance, call the
Air Permit Hotline – 1-877-5PERMIT

Baghouse Control Equipment **Form BCE**
Revision 6
2/18/10

Complete this form for each baghouse. Please see instructions on page 2 before filling out the form.

IDENTIFICATION

1. Company Name	2. Facility Name:
Nunhems USA, Inc	Nunhems Parma

3. Brief Project Description: Minor source permit for existing carrot and onion seed processing facility

BAGHOUSE INFORMATION

4. Baghouse Manufacturer: Carothers and Son, LTD	5. Baghouse Model: CSL 300 TR 12 HEI	6. Baghouse Equipment ID: DC05

7 (a). Baghouse particulate matter emission concentration. **Note: Provide information in 7(a)-(c) or answer question #8 below.**	0.0007 gr/dscf	*Manufacturers typically provide guarantees in grains per dry standard cubic foot (gr/dscf). Provide a copy of the guarantee, or other documentation, with the application along with a description of the types of bags that must be used to achieve the emission concentration.* ***Emission concentrations less than 0.01 gr/dscf will receive additional scrutiny by DEQ and a source test of the baghouse may be required.*** *If a guarantee is not provided then you must document how you obtained the emission concentration. Without documentation the application is not complete.*
7 (b). Percentage PM_{10} Or Provide PM_{10} Emission Concentration	99.995 % _____ gr/dscf	*What percentage of the PM concentration listed in question #7(a) is PM_{10}. You must provide documentation as to how the percentage was determined (i.e per the baghouse manufacturer). Without documentation the application is not complete.*
7 (c). Baghouse flow rate	20,000 dscfm	*Provide the baghouse flow rate in dry standard cubic feet per minute. Actual cubic feet per minute may be given in lieu of dscfm* ***if it is documented*** *that moisture content is insignificant. You must provide documentation as to how this flow rate was determined (i.e. per the exhaust fan manufacturer, combustion evaluation, etc.). Without documentation the application is not complete.*
8. Baghouse particulate matter control efficiency. **Note: Not needed if section #7 is completed.**	_____ % PM control _____ % PM_{10} control	*Applicant's providing the control efficiency of the baghouse must provide control efficiency for both PM and PM_{10}. Provide a copy of the control efficiency documentation with the application. Documentation must include a description of the types of bags that must be used to achieve the control efficiency. Without documentation the application is not complete.*
9. Is the baghouse equipped with a bag leak detector?	☐ Yes ☒ No	*If a bag leak detector is installed provide documentation on the leak detector, including; how the leak detector functions and what level of the output signal indicates that a bag is leaking. Without documentation the application is not complete.*

DEQ AIR QUALITY PROGRAM
1410 N. Hilton, Boise, ID 83706
For assistance, call the
Air Permit Hotline – 1-877-5PERMIT

Baghouse Control Equipment **Form BCE**
Revision 6
2/18/10

Complete this form for each baghouse. Please see instructions on page 2 before filling out the form.

IDENTIFICATION

1. Company Name	2. Facility Name:
Nunhems USA, Inc	Nunhems Parma

3. Brief Project Description: Minor source permit for existing carrot and onion seed processing facility

BAGHOUSE INFORMATION

4. Baghouse Manufacturer: Carothers and Son, LTD	5. Baghouse Model: CSL 300 TR 12 HEI	6. Baghouse Equipment ID: DC06

7 (a). Baghouse particulate matter emission concentration. **Note: Provide information in 7(a)-(c) or answer question #8 below.**	0.0007 gr/dscf	*Manufacturers typically provide guarantees in grains per dry standard cubic foot (gr/dscf). Provide a copy of the guarantee, or other documentation, with the application along with a description of the types of bags that must be used to achieve the emission concentration.* ***Emission concentrations less than 0.01 gr/dscf will receive additional scrutiny by DEQ and a source test of the baghouse may be required.*** *If a guarantee is not provided then you must document how you obtained the emission concentration. Without documentation the application is not complete.*
7 (b). Percentage PM_{10} Or Provide PM_{10} Emission Concentration	99.995 % _____ gr/dscf	*What percentage of the PM concentration listed in question #7(a) is PM_{10}. You must provide documentation as to how the percentage was determined (i.e per the baghouse manufacturer). Without documentation the application is not complete.*
7 (c). Baghouse flow rate	32,500 dscfm	*Provide the baghouse flow rate in dry standard cubic feet per minute. Actual cubic feet per minute may be given in lieu of dscfm* ***if it is documented*** *that moisture content is insignificant. You must provide documentation as to how this flow rate was determined (i.e. per the exhaust fan manufacturer, combustion evaluation, etc.). Without documentation the application is not complete.*
8. Baghouse particulate matter control efficiency. **Note: Not needed if section #7 is completed.**	_____ % PM control _____ % PM_{10} control	*Applicant's providing the control efficiency of the baghouse must provide control efficiency for both PM and PM_{10}. Provide a copy of the control efficiency documentation with the application. Documentation must include a description of the types of bags that must be used to achieve the control efficiency. Without documentation the application is not complete.*
9. Is the baghouse equipped with a bag leak detector?	☐ Yes ☒ No	*If a bag leak detector is installed provide documentation on the leak detector, including; how the leak detector functions and what level of the output signal indicates that a bag is leaking. Without documentation the application is not complete.*

DEQ AIR QUALITY PROGRAM
1410 N. Hilton, Boise, ID 83706
For assistance, call the
Air Permit Hotline – 1-877-5PERMIT

Baghouse Control Equipment **Form BCE**
Revision 6
2/18/10

Complete this form for each baghouse. Please see instructions on page 2 before filling out the form.

IDENTIFICATION

1. Company Name	2. Facility Name:
Nunhems USA, Inc	Nunhems Parma

3. Brief Project Description: Minor source permit for existing carrot and onion seed processing facility

BAGHOUSE INFORMATION

4. Baghouse Manufacturer: Carothers and Son, LTD	5. Baghouse Model: CSL 64 TR 10 HEI	6. Baghouse Equipment ID: DC07

7 (a). Baghouse particulate matter emission concentration. **Note: Provide information in 7(a)-(c) or answer question #8 below.**	0.0007 gr/dscf	*Manufacturers typically provide guarantees in grains per dry standard cubic foot (gr/dscf). Provide a copy of the guarantee, or other documentation, with the application along with a description of the types of bags that must be used to achieve the emission concentration.* ***Emission concentrations less than 0.01 gr/dscf will receive additional scrutiny by DEQ and a source test of the baghouse may be required.*** *If a guarantee is not provided then you must document how you obtained the emission concentration. Without documentation the application is not complete.*
7 (b). Percentage PM_{10} Or Provide PM_{10} Emission Concentration	99.995 % _____ gr/dscf	*What percentage of the PM concentration listed in question #7(a) is PM_{10}. You must provide documentation as to how the percentage was determined (i.e per the baghouse manufacturer). Without documentation the application is not complete.*
7 (c). Baghouse flow rate	6,800 dscfm	*Provide the baghouse flow rate in dry standard cubic feet per minute. Actual cubic feet per minute may be given in lieu of dscfm* ***if it is documented*** *that moisture content is insignificant. You must provide documentation as to how this flow rate was determined (i.e. per the exhaust fan manufacturer, combustion evaluation, etc.). Without documentation the application is not complete.*
8. Baghouse particulate matter control efficiency. **Note: Not needed if section #7 is completed.**	_____ % PM control _____ % PM_{10} control	*Applicant's providing the control efficiency of the baghouse must provide control efficiency for both PM and PM_{10}. Provide a copy of the control efficiency documentation with the application. Documentation must include a description of the types of bags that must be used to achieve the control efficiency. Without documentation the application is not complete.*
9. Is the baghouse equipped with a bag leak detector?	☐ Yes ☒ No	*If a bag leak detector is installed provide documentation on the leak detector, including; how the leak detector functions and what level of the output signal indicates that a bag is leaking. Without documentation the application is not complete.*

DEQ AIR QUALITY PROGRAM
1410 N. Hilton, Boise, ID 83706
For assistance, call the
Air Permit Hotline – 1-877-5PERMIT

Baghouse Control Equipment **Form BCE**
Revision 6
2/18/10

Complete this form for each baghouse. Please see instructions on page 2 before filling out the form.

IDENTIFICATION

1. Company Name	2. Facility Name:
Nunhems USA, Inc	Nunhems Parma

3. Brief Project Description: Minor source permit for existing carrot and onion seed processing facility

BAGHOUSE INFORMATION

4. Baghouse Manufacturer: Carothers and Son, LTD	5. Baghouse Model: CSL 225 TR 12 HEI	6. Baghouse Equipment ID: DC08

7 (a). Baghouse particulate matter emission concentration. **Note: Provide information in 7(a)-(c) or answer question #8 below.**	0.0007 gr/dscf	*Manufacturers typically provide guarantees in grains per dry standard cubic foot (gr/dscf). Provide a copy of the guarantee, or other documentation, with the application along with a description of the types of bags that must be used to achieve the emission concentration.* ***Emission concentrations less than 0.01 gr/dscf will receive additional scrutiny by DEQ and a source test of the baghouse may be required.*** *If a guarantee is not provided then you must document how you obtained the emission concentration. Without documentation the application is not complete.*
7 (b). Percentage PM_{10} Or Provide PM_{10} Emission Concentration	99.995 % _____ gr/dscf	*What percentage of the PM concentration listed in question #7(a) is PM_{10}. You must provide documentation as to how the percentage was determined (i.e per the baghouse manufacturer). Without documentation the application is not complete.*
7 (c). Baghouse flow rate	25,000 dscfm	*Provide the baghouse flow rate in dry standard cubic feet per minute. Actual cubic feet per minute may be given in lieu of dscfm* ***if it is documented*** *that moisture content is insignificant. You must provide documentation as to how this flow rate was determined (i.e. per the exhaust fan manufacturer, combustion evaluation, etc.). Without documentation the application is not complete.*
8. Baghouse particulate matter control efficiency. **Note: Not needed if section #7 is completed.**	_____ % PM control _____ % PM_{10} control	*Applicant's providing the control efficiency of the baghouse must provide control efficiency for both PM and PM_{10}. Provide a copy of the control efficiency documentation with the application. Documentation must include a description of the types of bags that must be used to achieve the control efficiency. Without documentation the application is not complete.*
9. Is the baghouse equipped with a bag leak detector?	☐ Yes ☒ No	*If a bag leak detector is installed provide documentation on the leak detector, including; how the leak detector functions and what level of the output signal indicates that a bag is leaking. Without documentation the application is not complete.*

DEQ AIR QUALITY PROGRAM
1410 N. Hilton, Boise, ID 83706
For assistance, call the
Air Permit Hotline – 1-877-5PERMIT

Baghouse Control Equipment **Form BCE**
Revision 6
2/18/10

Complete this form for each baghouse. Please see instructions on page 2 before filling out the form.

IDENTIFICATION

1. Company Name	2. Facility Name:
Nunhems USA, Inc	Nunhems Parma

3. Brief Project Description: Minor source permit for existing carrot and onion seed processing facility

BAGHOUSE INFORMATION

4. Baghouse Manufacturer: Camfil FARR Air Pollution Control	5. Baghouse Model: GS-8 Gold Series	6. Baghouse Equipment ID: FARR01

7 (a). Baghouse particulate matter emission concentration. **Note: Provide information in 7(a)-(c) or answer question #8 below.**	0.002 gr/dscf	*Manufacturers typically provide guarantees in grains per dry standard cubic foot (gr/dscf). Provide a copy of the guarantee, or other documentation, with the application along with a description of the types of bags that must be used to achieve the emission concentration.* ***Emission concentrations less than 0.01 gr/dscf will receive additional scrutiny by DEQ and a source test of the baghouse may be required.*** *If a guarantee is not provided then you must document how you obtained the emission concentration. Without documentation the application is not complete.*
7 (b). Percentage PM_{10} Or Provide PM_{10} Emission Concentration	99.993 % _____ gr/dscf	*What percentage of the PM concentration listed in question #7(a) is PM_{10}. You must provide documentation as to how the percentage was determined (i.e per the baghouse manufacturer). Without documentation the application is not complete.*
7 (c). Baghouse flow rate	_____ dscfm	*Provide the baghouse flow rate in dry standard cubic feet per minute. Actual cubic feet per minute may be given in lieu of dscfm* ***if it is documented*** *that moisture content is insignificant. You must provide documentation as to how this flow rate was determined (i.e. per the exhaust fan manufacturer, combustion evaluation, etc.). Without documentation the application is not complete.*
8. Baghouse particulate matter control efficiency. **Note: Not needed if section #7 is completed.**	_____ % PM control _____ % PM_{10} control	*Applicant's providing the control efficiency of the baghouse must provide control efficiency for both PM and PM_{10}. Provide a copy of the control efficiency documentation with the application. Documentation must include a description of the types of bags that must be used to achieve the control efficiency. Without documentation the application is not complete.*
9. Is the baghouse equipped with a bag leak detector?	☐ Yes ☒ No	*If a bag leak detector is installed provide documentation on the leak detector, including; how the leak detector functions and what level of the output signal indicates that a bag is leaking. Without documentation the application is not complete.*

DEQ AIR QUALITY PROGRAM
1410 N. Hilton, Boise, ID 83706
For assistance, call the
Air Permit Hotline – 1-877-5PERMIT

Baghouse Control Equipment **Form BCE**
Revision 6
2/18/10

Complete this form for each baghouse. Please see instructions on page 2 before filling out the form.

IDENTIFICATION

1. Company Name	2. Facility Name:
Nunhems USA, Inc	Nunhems Parma

3. Brief Project Description: Minor source permit for existing carrot and onion seed processing facility

BAGHOUSE INFORMATION

4. Baghouse Manufacturer: Camfil FARR Air Pollution Control	5. Baghouse Model: GS-8 Gold Series	6. Baghouse Equipment ID: FARR02

7 (a). Baghouse particulate matter emission concentration. **Note: Provide information in 7(a)-(c) or answer question #8 below.**	0.002 gr/dscf	*Manufacturers typically provide guarantees in grains per dry standard cubic foot (gr/dscf). Provide a copy of the guarantee, or other documentation, with the application along with a description of the types of bags that must be used to achieve the emission concentration.* ***Emission concentrations less than 0.01 gr/dscf will receive additional scrutiny by DEQ and a source test of the baghouse may be required.*** *If a guarantee is not provided then you must document how you obtained the emission concentration. Without documentation the application is not complete.*
7 (b). Percentage PM_{10} Or Provide PM_{10} Emission Concentration	99.993 % _____ gr/dscf	*What percentage of the PM concentration listed in question #7(a) is PM_{10}. You must provide documentation as to how the percentage was determined (i.e per the baghouse manufacturer). Without documentation the application is not complete.*
7 (c). Baghouse flow rate	_____ dscfm	*Provide the baghouse flow rate in dry standard cubic feet per minute. Actual cubic feet per minute may be given in lieu of dscfm* ***if it is documented*** *that moisture content is insignificant. You must provide documentation as to how this flow rate was determined (i.e. per the exhaust fan manufacturer, combustion evaluation, etc.). Without documentation the application is not complete.*
8. Baghouse particulate matter control efficiency. **Note: Not needed if section #7 is completed.**	_____ % PM control _____ % PM_{10} control	*Applicant's providing the control efficiency of the baghouse must provide control efficiency for both PM and PM_{10}. Provide a copy of the control efficiency documentation with the application. Documentation must include a description of the types of bags that must be used to achieve the control efficiency. Without documentation the application is not complete.*
9. Is the baghouse equipped with a bag leak detector?	☐ Yes ☒ No	*If a bag leak detector is installed provide documentation on the leak detector, including; how the leak detector functions and what level of the output signal indicates that a bag is leaking. Without documentation the application is not complete.*

DEQ AIR QUALITY PROGRAM
1410 N. Hilton, Boise, ID 83706
For assistance, call the
Air Permit Hotline – 1-877-5PERMIT

Baghouse Control Equipment **Form BCE**
Revision 6
2/18/10

Complete this form for each baghouse. Please see instructions on page 2 before filling out the form.

IDENTIFICATION

1. Company Name	2. Facility Name:
Nunhems USA, Inc	Nunhems Parma

3. Brief Project Description: Minor source permit for existing carrot and onion seed processing facility

BAGHOUSE INFORMATION

4. Baghouse Manufacturer: Camfil FARR Air Pollution Control	5. Baghouse Model: GS-8 Gold Series	6. Baghouse Equipment ID: FARR03

7 (a). Baghouse particulate matter emission concentration. **Note: Provide information in 7(a)-(c) or answer question #8 below.**	0.002 gr/dscf	*Manufacturers typically provide guarantees in grains per dry standard cubic foot (gr/dscf). Provide a copy of the guarantee, or other documentation, with the application along with a description of the types of bags that must be used to achieve the emission concentration.* ***Emission concentrations less than 0.01 gr/dscf will receive additional scrutiny by DEQ and a source test of the baghouse may be required.*** *If a guarantee is not provided then you must document how you obtained the emission concentration. Without documentation the application is not complete.*
7 (b). Percentage PM_{10} Or Provide PM_{10} Emission Concentration	99.993 % _____ gr/dscf	*What percentage of the PM concentration listed in question #7(a) is PM_{10}. You must provide documentation as to how the percentage was determined (i.e per the baghouse manufacturer). Without documentation the application is not complete.*
7 (c). Baghouse flow rate	_____ dscfm	*Provide the baghouse flow rate in dry standard cubic feet per minute. Actual cubic feet per minute may be given in lieu of dscfm* ***if it is documented*** *that moisture content is insignificant. You must provide documentation as to how this flow rate was determined (i.e. per the exhaust fan manufacturer, combustion evaluation, etc.). Without documentation the application is not complete.*
8. Baghouse particulate matter control efficiency. **Note: Not needed if section #7 is completed.**	_____ % PM control _____ % PM_{10} control	*Applicant's providing the control efficiency of the baghouse must provide control efficiency for both PM and PM_{10}. Provide a copy of the control efficiency documentation with the application. Documentation must include a description of the types of bags that must be used to achieve the control efficiency. Without documentation the application is not complete.*
9. Is the baghouse equipped with a bag leak detector?	☐ Yes ☒ No	*If a bag leak detector is installed provide documentation on the leak detector, including; how the leak detector functions and what level of the output signal indicates that a bag is leaking. Without documentation the application is not complete.*

DEQ AIR QUALITY PROGRAM
1410 N. Hilton, Boise, ID 83706
For assistance, call the
Air Permit Hotline – 1-877-5PERMIT

Baghouse Control Equipment **Form BCE**
Revision 6
2/18/10

Complete this form for each baghouse. Please see instructions on page 2 before filling out the form.

IDENTIFICATION

1. Company Name	2. Facility Name:
Nunhems USA, Inc	Nunhems Parma

3. Brief Project Description: Minor source permit for existing carrot and onion seed processing facility

BAGHOUSE INFORMATION

4. Baghouse Manufacturer: Camfil FARR Air Pollution Control	5. Baghouse Model: GS-8 Gold Series	6. Baghouse Equipment ID: FARR04

7 (a). Baghouse particulate matter emission concentration. **Note: Provide information in 7(a)-(c) or answer question #8 below.**	0.002 gr/dscf	*Manufacturers typically provide guarantees in grains per dry standard cubic foot (gr/dscf). Provide a copy of the guarantee, or other documentation, with the application along with a description of the types of bags that must be used to achieve the emission concentration.* ***Emission concentrations less than 0.01 gr/dscf will receive additional scrutiny by DEQ and a source test of the baghouse may be required.*** *If a guarantee is not provided then you must document how you obtained the emission concentration. Without documentation the application is not complete.*
7 (b). Percentage PM_{10} Or Provide PM_{10} Emission Concentration	99.993 % _____ gr/dscf	*What percentage of the PM concentration listed in question #7(a) is PM_{10}. You must provide documentation as to how the percentage was determined (i.e per the baghouse manufacturer). Without documentation the application is not complete.*
7 (c). Baghouse flow rate	_____ dscfm	*Provide the baghouse flow rate in dry standard cubic feet per minute. Actual cubic feet per minute may be given in lieu of dscfm* ***if it is documented*** *that moisture content is insignificant. You must provide documentation as to how this flow rate was determined (i.e. per the exhaust fan manufacturer, combustion evaluation, etc.). Without documentation the application is not complete.*
8. Baghouse particulate matter control efficiency. **Note: Not needed if section #7 is completed.**	_____ % PM control _____ % PM_{10} control	*Applicant's providing the control efficiency of the baghouse must provide control efficiency for both PM and PM_{10}. Provide a copy of the control efficiency documentation with the application. Documentation must include a description of the types of bags that must be used to achieve the control efficiency. Without documentation the application is not complete.*
9. Is the baghouse equipped with a bag leak detector?	☐ Yes ☒ No	*If a bag leak detector is installed provide documentation on the leak detector, including; how the leak detector functions and what level of the output signal indicates that a bag is leaking. Without documentation the application is not complete.*

DEQ AIR QUALITY PROGRAM
1410 N. Hilton, Boise, ID 83706
For assistance, call the
Air Permit Hotline – 1-877-5PERMIT

Baghouse Control Equipment **Form BCE**
Revision 6
2/18/10

Complete this form for each baghouse. Please see instructions on page 2 before filling out the form.

IDENTIFICATION

1. Company Name	2. Facility Name:
Nunhems USA, Inc	Nunhems Parma

3. Brief Project Description: Minor source permit for existing carrot and onion seed processing facility

BAGHOUSE INFORMATION

4. Baghouse Manufacturer: Camfil FARR Air Pollution Control	5. Baghouse Model: GS-8 Gold Series	6. Baghouse Equipment ID: FARR05

7 (a). Baghouse particulate matter emission concentration. **Note: Provide information in 7(a)-(c) or answer question #8 below.**	0.002 gr/dscf	*Manufacturers typically provide guarantees in grains per dry standard cubic foot (gr/dscf). Provide a copy of the guarantee, or other documentation, with the application along with a description of the types of bags that must be used to achieve the emission concentration.* ***Emission concentrations less than 0.01 gr/dscf will receive additional scrutiny by DEQ and a source test of the baghouse may be required.*** *If a guarantee is not provided then you must document how you obtained the emission concentration. Without documentation the application is not complete.*
7 (b). Percentage PM_{10} Or Provide PM_{10} Emission Concentration	99.993 % _____ gr/dscf	*What percentage of the PM concentration listed in question #7(a) is PM_{10}. You must provide documentation as to how the percentage was determined (i.e per the baghouse manufacturer). Without documentation the application is not complete.*
7 (c). Baghouse flow rate	_____ dscfm	*Provide the baghouse flow rate in dry standard cubic feet per minute. Actual cubic feet per minute may be given in lieu of dscfm* ***if it is documented*** *that moisture content is insignificant. You must provide documentation as to how this flow rate was determined (i.e. per the exhaust fan manufacturer, combustion evaluation, etc.). Without documentation the application is not complete.*
8. Baghouse particulate matter control efficiency. **Note: Not needed if section #7 is completed.**	_____ % PM control _____ % PM_{10} control	*Applicant's providing the control efficiency of the baghouse must provide control efficiency for both PM and PM_{10}. Provide a copy of the control efficiency documentation with the application. Documentation must include a description of the types of bags that must be used to achieve the control efficiency. Without documentation the application is not complete.*
9. Is the baghouse equipped with a bag leak detector?	☐ Yes ☒ No	*If a bag leak detector is installed provide documentation on the leak detector, including; how the leak detector functions and what level of the output signal indicates that a bag is leaking. Without documentation the application is not complete.*

DEQ AIR QUALITY PROGRAM
1410 N. Hilton, Boise, ID 83706
For assistance, call the
Air Permit Hotline – 1-877-5PERMIT

Baghouse Control Equipment **Form BCE**
Revision 6
2/18/10

Complete this form for each baghouse. Please see instructions on page 2 before filling out the form.

IDENTIFICATION

1. Company Name	2. Facility Name:
Nunhems USA, Inc	Nunhems Parma

3. Brief Project Description: Minor source permit for existing carrot and onion seed processing facility

BAGHOUSE INFORMATION

4. Baghouse Manufacturer: Camfil FARR Air Pollution Control	5. Baghouse Model: GS-8 Gold Series	6. Baghouse Equipment ID: FARR06

7 (a). Baghouse particulate matter emission concentration. **Note: Provide information in 7(a)-(c) or answer question #8 below.**	0.002 gr/dscf	*Manufacturers typically provide guarantees in grains per dry standard cubic foot (gr/dscf). Provide a copy of the guarantee, or other documentation, with the application along with a description of the types of bags that must be used to achieve the emission concentration.* ***Emission concentrations less than 0.01 gr/dscf will receive additional scrutiny by DEQ and a source test of the baghouse may be required.*** *If a guarantee is not provided then you must document how you obtained the emission concentration. Without documentation the application is not complete.*
7 (b). Percentage PM_{10} Or Provide PM_{10} Emission Concentration	99.993 % _____ gr/dscf	*What percentage of the PM concentration listed in question #7(a) is PM_{10}. You must provide documentation as to how the percentage was determined (i.e per the baghouse manufacturer). Without documentation the application is not complete.*
7 (c). Baghouse flow rate	_____ dscfm	*Provide the baghouse flow rate in dry standard cubic feet per minute. Actual cubic feet per minute may be given in lieu of dscfm* ***if it is documented*** *that moisture content is insignificant. You must provide documentation as to how this flow rate was determined (i.e. per the exhaust fan manufacturer, combustion evaluation, etc.). Without documentation the application is not complete.*
8. Baghouse particulate matter control efficiency. **Note: Not needed if section #7 is completed.**	_____ % PM control _____ % PM_{10} control	*Applicant's providing the control efficiency of the baghouse must provide control efficiency for both PM and PM_{10}. Provide a copy of the control efficiency documentation with the application. Documentation must include a description of the types of bags that must be used to achieve the control efficiency. Without documentation the application is not complete.*
9. Is the baghouse equipped with a bag leak detector?	☐ Yes ☒ No	*If a bag leak detector is installed provide documentation on the leak detector, including; how the leak detector functions and what level of the output signal indicates that a bag is leaking. Without documentation the application is not complete.*

DEQ AIR QUALITY PROGRAM
1410 N. Hilton, Boise, ID 83706
For assistance, call the
Air Permit Hotline – 1-877-5PERMIT

Baghouse Control Equipment **Form BCE**
Revision 6
2/18/10

Complete this form for each baghouse. Please see instructions on page 2 before filling out the form.

IDENTIFICATION

1. Company Name	2. Facility Name:
Nunhems USA, Inc	Nunhems Parma

3. Brief Project Description: Minor source permit for existing carrot and onion seed processing facility

BAGHOUSE INFORMATION

4. Baghouse Manufacturer: Herding Filtration, LLC	5. Baghouse Model: P-1899 HSL 1500-12/18 SZ	6. Baghouse Equipment ID: HERD01

7 (a). Baghouse particulate matter emission concentration. **Note: Provide information in 7(a)-(c) or answer question #8 below.**	0.0004 gr/dscf	*Manufacturers typically provide guarantees in grains per dry standard cubic foot (gr/dscf). Provide a copy of the guarantee, or other documentation, with the application along with a description of the types of bags that must be used to achieve the emission concentration.* ***Emission concentrations less than 0.01 gr/dscf will receive additional scrutiny by DEQ and a source test of the baghouse may be required.*** *If a guarantee is not provided then you must document how you obtained the emission concentration. Without documentation the application is not complete.*
7 (b). Percentage PM_{10} Or Provide PM_{10} Emission Concentration	99.993 % _____ gr/dscf	*What percentage of the PM concentration listed in question #7(a) is PM_{10}. You must provide documentation as to how the percentage was determined (i.e per the baghouse manufacturer). Without documentation the application is not complete.*
7 (c). Baghouse flow rate	4,700 dscfm	*Provide the baghouse flow rate in dry standard cubic feet per minute. Actual cubic feet per minute may be given in lieu of dscfm* ***if it is documented*** *that moisture content is insignificant. You must provide documentation as to how this flow rate was determined (i.e. per the exhaust fan manufacturer, combustion evaluation, etc.). Without documentation the application is not complete.*
8. Baghouse particulate matter control efficiency. **Note: Not needed if section #7 is completed.**	_____ % PM control _____ % PM_{10} control	*Applicant's providing the control efficiency of the baghouse must provide control efficiency for both PM and PM_{10}. Provide a copy of the control efficiency documentation with the application. Documentation must include a description of the types of bags that must be used to achieve the control efficiency. Without documentation the application is not complete.*
9. Is the baghouse equipped with a bag leak detector?	☐ Yes ☒ No	*If a bag leak detector is installed provide documentation on the leak detector, including; how the leak detector functions and what level of the output signal indicates that a bag is leaking. Without documentation the application is not complete.*

DEQ AIR QUALITY PROGRAM
1410 N. Hilton, Boise, ID 83706
For assistance, call the
Air Permit Hotline – 1-877-5PERMIT

Baghouse Control Equipment **Form BCE**
Revision 6
2/18/10

Complete this form for each baghouse. Please see instructions on page 2 before filling out the form.

IDENTIFICATION

1. Company Name	2. Facility Name:
Nunhems USA, Inc	Nunhems Parma

3. Brief Project Description: Minor source permit for existing carrot and onion seed processing facility

BAGHOUSE INFORMATION

4. Baghouse Manufacturer: Herding Filtration, LLC	5. Baghouse Model: P-2112 Delta Sys 1500-144/9 (3KA) GZ	6. Baghouse Equipment ID: HERD02

7 (a). Baghouse particulate matter emission concentration. **Note: Provide information in 7(a)-(c) or answer question #8 below.**	0.0004 gr/dscf	*Manufacturers typically provide guarantees in grains per dry standard cubic foot (gr/dscf). Provide a copy of the guarantee, or other documentation, with the application along with a description of the types of bags that must be used to achieve the emission concentration.* ***Emission concentrations less than 0.01 gr/dscf will receive additional scrutiny by DEQ and a source test of the baghouse may be required.*** *If a guarantee is not provided then you must document how you obtained the emission concentration. Without documentation the application is not complete.*
7 (b). Percentage PM_{10} Or Provide PM_{10} Emission Concentration	99.993 % _____ gr/dscf	*What percentage of the PM concentration listed in question #7(a) is PM_{10}. You must provide documentation as to how the percentage was determined (i.e per the baghouse manufacturer). Without documentation the application is not complete.*
7 (c). Baghouse flow rate	23,200 dscfm	*Provide the baghouse flow rate in dry standard cubic feet per minute. Actual cubic feet per minute may be given in lieu of dscfm* ***if it is documented*** *that moisture content is insignificant. You must provide documentation as to how this flow rate was determined (i.e. per the exhaust fan manufacturer, combustion evaluation, etc.). Without documentation the application is not complete.*
8. Baghouse particulate matter control efficiency. **Note: Not needed if section #7 is completed.**	_____ % PM control _____ % PM_{10} control	*Applicant's providing the control efficiency of the baghouse must provide control efficiency for both PM and PM_{10}. Provide a copy of the control efficiency documentation with the application. Documentation must include a description of the types of bags that must be used to achieve the control efficiency. Without documentation the application is not complete.*
9. Is the baghouse equipped with a bag leak detector?	☐ Yes ☒ No	*If a bag leak detector is installed provide documentation on the leak detector, including; how the leak detector functions and what level of the output signal indicates that a bag is leaking. Without documentation the application is not complete.*

DEQ AIR QUALITY PROGRAM
1410 N. Hilton, Boise, ID 83706
For assistance, call the
Air Permit Hotline – 1-877-5PERMIT

Baghouse Control Equipment **Form BCE**
Revision 6
2/18/10

Complete this form for each baghouse. Please see instructions on page 2 before filling out the form.

IDENTIFICATION

1. Company Name	2. Facility Name:
Nunhems USA, Inc	Nunhems Parma

3. Brief Project Description: Minor source permit for existing carrot and onion seed processing facility

BAGHOUSE INFORMATION

4. Baghouse Manufacturer: Murphy Rodgers, Inc	5. Baghouse Model: MRM-12-4D	6. Baghouse Equipment ID: MRBH01

7 (a). Baghouse particulate matter emission concentration. **Note: Provide information in 7(a)-(c) or answer question #8 below.**	_____ gr/dscf	*Manufacturers typically provide guarantees in grains per dry standard cubic foot (gr/dscf). Provide a copy of the guarantee, or other documentation, with the application along with a description of the types of bags that must be used to achieve the emission concentration.* ***Emission concentrations less than 0.01 gr/dscf will receive additional scrutiny by DEQ and a source test of the baghouse may be required.*** *If a guarantee is not provided then you must document how you obtained the emission concentration. Without documentation the application is not complete.*
7 (b). Percentage PM_{10} Or Provide PM_{10} Emission Concentration	99.993 % _____ gr/dscf	*What percentage of the PM concentration listed in question #7(a) is PM_{10}. You must provide documentation as to how the percentage was determined (i.e per the baghouse manufacturer). Without documentation the application is not complete.*
7 (c). Baghouse flow rate	3,900 dscfm	*Provide the baghouse flow rate in dry standard cubic feet per minute. Actual cubic feet per minute may be given in lieu of dscfm* ***if it is documented*** *that moisture content is insignificant. You must provide documentation as to how this flow rate was determined (i.e. per the exhaust fan manufacturer, combustion evaluation, etc.). Without documentation the application is not complete.*
8. Baghouse particulate matter control efficiency. **Note: Not needed if section #7 is completed.**	_____ % PM control _____ % PM_{10} control	*Applicant's providing the control efficiency of the baghouse must provide control efficiency for both PM and PM_{10}. Provide a copy of the control efficiency documentation with the application. Documentation must include a description of the types of bags that must be used to achieve the control efficiency. Without documentation the application is not complete.*
9. Is the baghouse equipped with a bag leak detector?	☐ Yes ☒ No	*If a bag leak detector is installed provide documentation on the leak detector, including; how the leak detector functions and what level of the output signal indicates that a bag is leaking. Without documentation the application is not complete.*

DEQ AIR QUALITY PROGRAM
1410 N. Hilton, Boise, ID 83706
For assistance, call the
Air Permit Hotline – 1-877-5PERMIT

Emissions Units - Industrial Engine Information **Form EU1**
Revision 8
1/15/10

Please see instructions on page 2 before filling out the form.

IDENTIFICATION

1. Company Name:	2. Facility Name:	
Nunhems USA, Inc	Nunhems Parma	
3 Brief Project Description:	Minor source permit for existing onion and carrot seed processing facility	

ENGINE (EMISSION UNIT) DESCRIPTION AND SPECIFICATIONS

4. Type of Unit:	☐ New Unit ☒ Unpermitted Existing Unit ☐ Modification to a Unit with Permit #: Date Issued:		
5. Engine Displacement:	8.8 liter (liters per cylinder)	6. Ignition Type:	☒ Compression ☐ Spark
7. Use	☒ Emergency ☐ Non-Emergency		
8. Engine ID Number:	9. Maximum Rated Engine Power:		
CATGEN (250 kW/398 bhp)	_____ Brake Horsepower (bhp)		

10. Construction Date:	11. Manufacturer:	12. Model:	13. Model Year:
2008	Caterpillar	C9	2008

14. Date of Modification (if applicable):	15. Serial Number (if available):	16. Control Device (if any):
	S9L01887	

FUEL DESCRIPTION AND SPECIFICATIONS

17. Fuel Type	☒ Diesel Fuel (#) (gal/hr)	☐ Gasoline Fuel (gal/hr)	☐ Natural Gas (cf/hr)	☐ Other Fuels (unit:)
18. Full Load Consumption Rate	19.4 (100%)			
19. Actual Consumption Rate				
20. Sulfur Content wt%	0.0015	N/A	N/A	

OPERATING LIMITS & SCHEDULE

21. Imposed Operating Limits (hours/year, or gallons fuel/year, etc.):

500 hours per year

22. Operating Schedule (hours/day, months/year, etc.):

DEQ AIR QUALITY PROGRAM
1410 N. Hilton, Boise, ID 83706
For assistance, call the
Air Permit Hotline – 1-877-5PERMIT

Emissions Units - Industrial Engine Information **Form EU1**
Revision 8
1/15/10

Please see instructions on page 2 before filling out the form.

IDENTIFICATION

1. Company Name:	2. Facility Name:	
Nunhems USA, Inc	Nunhems Parma	
3 Brief Project Description:	Minor source permit for existing onion and carrot seed processing facility	

ENGINE (EMISSION UNIT) DESCRIPTION AND SPECIFICATIONS

4. Type of Unit:	☐ New Unit ☒ Unpermitted Existing Unit ☐ Modification to a Unit with Permit #: Date Issued:		
5. Engine Displacement:	3.125 (liters per cylinder)	6. Ignition Type:	☒ Compression ☐ Spark
7. Use	☒ Emergency ☐ Non-Emergency		
8. Engine ID Number:	9. Maximum Rated Engine Power:		
CUMGEN (2,205 bhp)	_____ Brake Horsepower (bhp)		
10. Construction Date:	11. Manufacturer:	12. Model:	13. Model Year:
8/23/2009	Cummins	QSK50-G4 NR2	2009
14. Date of Modification (if applicable):	15. Serial Number (if available):	16. Control Device (if any):	
	F090008141	Turbocharged and low temperature aftercooled	

FUEL DESCRIPTION AND SPECIFICATIONS

17. Fuel Type	☒ Diesel Fuel (#) (gal/hr)	☐ Gasoline Fuel (gal/hr)	☐ Natural Gas (cf/hr)	☐ Other Fuels (unit:)
18. Full Load Consumption Rate	109.4 (100%)			
19. Actual Consumption Rate				
20. Sulfur Content wt%	0.0015	N/A	N/A	

OPERATING LIMITS & SCHEDULE

21. Imposed Operating Limits (hours/year, or gallons fuel/year, etc.):

500 hours per year

22. Operating Schedule (hours/day, months/year, etc.):

DEQ AIR QUALITY PROGRAM
1410 N. Hilton, Boise, ID 83706
For assistance, call the
Air Permit Hotline – 1-877-5PERMIT

Emissions Units - Industrial Engine Information **Form EU1**
Revision 8
1/15/10

Please see instructions on page 2 before filling out the form.

IDENTIFICATION

1. Company Name:	2. Facility Name:	
Nunhems USA, Inc	Nunhems Parma	
3 Brief Project Description:	Minor source permit for existing onion and carrot seed processing facility	

ENGINE (EMISSION UNIT) DESCRIPTION AND SPECIFICATIONS

4. Type of Unit:	☐ New Unit ☒ Unpermitted Existing Unit ☐ Modification to a Unit with Permit #: Date Issued:		
5. Engine Displacement:	1.25 (liters per cylinder)	6. Ignition Type:	☒ Compression ☐ Spark
7. Use	☒ Emergency ☐ Non-Emergency		
8. Engine ID Number:	9. Maximum Rated Engine Power:		
CGENGEN (125 bhp)	_____ Brake Horsepower (bhp)		

10. Construction Date:	11. Manufacturer:	12. Model:	13. Model Year:
8/3/2001	Generac	1524500100	2001

14. Date of Modification (if applicable):	15. Serial Number (if available):	16. Control Device (if any):
	2062523	

FUEL DESCRIPTION AND SPECIFICATIONS

17. Fuel Type	☒ Diesel Fuel (#) (gal/hr)	☐ Gasoline Fuel (gal/hr)	☐ Natural Gas (cf/hr)	☐ Other Fuels (unit:)
18. Full Load Consumption Rate	6 (100%)			
19. Actual Consumption Rate				
20. Sulfur Content wt%	0.0015	N/A	N/A	

OPERATING LIMITS & SCHEDULE

21. Imposed Operating Limits (hours/year, or gallons fuel/year, etc.):

500 hours per year

22. Operating Schedule (hours/day, months/year, etc.):

DEQ AIR QUALITY PROGRAM
1410 N. Hilton, Boise, ID 83706
For assistance, call the
Air Permit Hotline – 1-877-5PERMIT

Emissions Unit - General **Form EU0**
Revision 4
08/28/08

Please see instructions on page 2 before filling out the form.

IDENTIFICATION

1. Company Name:	2. Facility Name:	3. Facility ID No:
Nunhems USA, Inc	Nunhems Parma	

4. Brief Project Description:	Minor source permit for existing carrot and onion seed processing facility

EMISSIONS UNIT (PROCESS) IDENTIFICATION & DESCRIPTION

5.	Emissions Unit (EU) Name:	ADVANDED DISTRUBOR PRODUCTS 60,000 BTU HVAC
6.	EU ID Number:	1 UNIT
7.	EU Type:	☐ New Source ☒ Unpermitted Existing Source ☐ Modification to a Permitted Source -- Previous Permit #: Date Issued:
8.	Manufacturer:	ADP
9.	Model:	CUHN-60A-1
10..	Maximum Capacity:	60,000 BTU
11.	Date of Construction:	UNKNOWN
12.	Date of Modification (if any):	
13.	Is this a Controlled Emission Unit?	☒ No ☐ Yes If Yes, complete the following section. If No, go to line 22.

EMISSIONS CONTROL EQUIPMENT

14. Control Equipment Name and ID:	
15. Date of Installation:	16. Date of Modification (if any):
17. Manufacturer and Model Number:	
18. ID(s) of Emission Unit Controlled:	
19. Is operating schedule different than emission units(s) involved?	☐ Yes ☐ No
20. Does the manufacturer guarantee the control efficiency of the control equipment?	☐ Yes ☐ No (If Yes, attach and label manufacturer guarantee)

	Pollutant Controlled					
	PM	PM10	SO_2	NOx	VOC	CO
Control Efficiency						

21. If manufacturer's data is not available, attach a separate sheet of paper to provide the control equipment design specifications and performance data to support the above mentioned control efficiency.

EMISSION UNIT OPERATING SCHEDULE (hours/day, hours/year, or other)

22.	Actual Operation:	UP TO 8,760 HOURS PER YEAR DEPENDING ON DEMAND
23.	Maximum Operation:	8,760 HOURS PER YEAR

REQUESTED LIMITS

24.	Are you requesting any permit limits?	☐ Yes ☒ No (If Yes, indicate all that apply below)
	☐ Operation Hour Limit(s):	
	☐ Production Limit(s):	
	☐ Material Usage Limit(s):	
	☐ Limits Based on Stack Testing:	Please attach all relevant stack testing summary reports
	☐ Other:	
25.	Rationale for Requesting the Limit(s):	

DEQ AIR QUALITY PROGRAM
1410 N. Hilton, Boise, ID 83706
For assistance, call the
Air Permit Hotline – 1-877-5PERMIT

Emissions Unit - General **Form EU0**
Revision 4
08/28/08

Please see instructions on page 2 before filling out the form.

IDENTIFICATION

1. Company Name:	2. Facility Name:	3. Facility ID No:
Nunhems USA, Inc	Nunhems Parma	

4. Brief Project Description:	Minor source permit for existing carrot and onion seed processing facility

EMISSIONS UNIT (PROCESS) IDENTIFICATION & DESCRIPTION

5.	Emissions Unit (EU) Name:	CAMBRIDGE 353,000 BTU PROPANE HVAC (5 UNITS)
6.	EU ID Number:	
7.	EU Type:	☐ New Source ☒ Unpermitted Existing Source ☐ Modification to a Permitted Source -- Previous Permit #: Date Issued:
8.	Manufacturer:	CAMBRIDGE
9.	Model:	S400
10..	Maximum Capacity:	353,000 BTU
11.	Date of Construction:	UNKNOWN
12.	Date of Modification (if any):	
13.	Is this a Controlled Emission Unit?	☒ No ☐ Yes If Yes, complete the following section. If No, go to line 22.

EMISSIONS CONTROL EQUIPMENT

14. Control Equipment Name and ID:		
15. Date of Installation:	16. Date of Modification (if any):	
17. Manufacturer and Model Number:		
18. ID(s) of Emission Unit Controlled:		
19. Is operating schedule different than emission units(s) involved?	☐ Yes ☐ No	
20. Does the manufacturer guarantee the control efficiency of the control equipment?	☐ Yes ☐ No (If Yes, attach and label manufacturer guarantee)	

	Pollutant Controlled					
	PM	PM10	SO_2	NOx	VOC	CO
Control Efficiency						

21. If manufacturer's data is not available, attach a separate sheet of paper to provide the control equipment design specifications and performance data to support the above mentioned control efficiency.

EMISSION UNIT OPERATING SCHEDULE (hours/day, hours/year, or other)

22.	Actual Operation:	UP TO 8,760 HOURS PER YEAR DEPENDING ON DEMAND
23.	Maximum Operation:	8,760 HOURS PER YEAR

REQUESTED LIMITS

24.	Are you requesting any permit limits?	☐ Yes ☒ No (If Yes, indicate all that apply below)
	☐ Operation Hour Limit(s):	
	☐ Production Limit(s):	
	☐ Material Usage Limit(s):	
	☐ Limits Based on Stack Testing:	Please attach all relevant stack testing summary reports
	☐ Other:	
25.	Rationale for Requesting the Limit(s):	

DEQ AIR QUALITY PROGRAM
1410 N. Hilton, Boise, ID 83706
For assistance, call the
Air Permit Hotline – 1-877-5PERMIT

Emissions Unit - General **Form EU0**
Revision 4
08/28/08

Please see instructions on page 2 before filling out the form.

IDENTIFICATION

1. Company Name:	2. Facility Name:	3. Facility ID No:
Nunhems USA, Inc	Nunhems Parma	

4. Brief Project Description:	Minor source permit for existing carrot and onion seed processing facility

EMISSIONS UNIT (PROCESS) IDENTIFICATION & DESCRIPTION

5.	Emissions Unit (EU) Name:	CARRIER 72,000 BTU PROPANE HVAC (4 UNITS)
6.	EU ID Number:	
7.	EU Type:	☐ New Source ☒ Unpermitted Existing Source ☐ Modification to a Permitted Source -- Previous Permit #: Date Issued:
8.	Manufacturer:	CARRIER
9.	Model:	48TF004-14-E004
10..	Maximum Capacity:	72,000 BTU
11.	Date of Construction:	UNKNOWN
12.	Date of Modification (if any):	
13.	Is this a Controlled Emission Unit?	☒ No ☐ Yes If Yes, complete the following section. If No, go to line 22.

EMISSIONS CONTROL EQUIPMENT

14. Control Equipment Name and ID:	
15. Date of Installation:	16. Date of Modification (if any):
17. Manufacturer and Model Number:	
18. ID(s) of Emission Unit Controlled:	
19. Is operating schedule different than emission units(s) involved?	☐ Yes ☐ No
20. Does the manufacturer guarantee the control efficiency of the control equipment?	☐ Yes ☐ No (If Yes, attach and label manufacturer guarantee)

	Pollutant Controlled					
	PM	PM10	SO_2	NOx	VOC	CO
Control Efficiency						

21. If manufacturer's data is not available, attach a separate sheet of paper to provide the control equipment design specifications and performance data to support the above mentioned control efficiency.

EMISSION UNIT OPERATING SCHEDULE (hours/day, hours/year, or other)

22.	Actual Operation:	UP TO 8,760 HOURS PER YEAR DEPENDING ON DEMAND
23.	Maximum Operation:	8,760 HOURS PER YEAR

REQUESTED LIMITS

24.	Are you requesting any permit limits?	☐ Yes ☒ No (If Yes, indicate all that apply below)
	☐ Operation Hour Limit(s):	
	☐ Production Limit(s):	
	☐ Material Usage Limit(s):	
	☐ Limits Based on Stack Testing:	Please attach all relevant stack testing summary reports
	☐ Other:	
25.	Rationale for Requesting the Limit(s):	

DEQ AIR QUALITY PROGRAM
1410 N. Hilton, Boise, ID 83706
For assistance, call the
Air Permit Hotline – 1-877-5PERMIT

Emissions Unit - General **Form EU0**
Revision 4
08/28/08

Please see instructions on page 2 before filling out the form.

IDENTIFICATION

1. Company Name:	2. Facility Name:	3. Facility ID No:
Nunhems USA, Inc	Nunhems Parma	

4. Brief Project Description:	Minor source permit for existing carrot and onion seed processing facility

EMISSIONS UNIT (PROCESS) IDENTIFICATION & DESCRIPTION

5.	Emissions Unit (EU) Name:	CARRIER 115,000 BTU PROPANE HVAC (12 UNITS)
6.	EU ID Number:	
7.	EU Type:	☐ New Source ☒ Unpermitted Existing Source ☐ Modification to a Permitted Source -- Previous Permit #: Date Issued:
8.	Manufacturer:	CARRIER
9.	Model:	48TF004-14-E005
10..	Maximum Capacity:	115,000 BTU
11.	Date of Construction:	UNKNOWN
12.	Date of Modification (if any):	
13.	Is this a Controlled Emission Unit?	☒ No ☐ Yes If Yes, complete the following section. If No, go to line 22.

EMISSIONS CONTROL EQUIPMENT

14. Control Equipment Name and ID:		
15. Date of Installation:	16. Date of Modification (if any):	
17. Manufacturer and Model Number:		
18. ID(s) of Emission Unit Controlled:		
19. Is operating schedule different than emission units(s) involved?	☐ Yes ☐ No	
20. Does the manufacturer guarantee the control efficiency of the control equipment?	☐ Yes ☐ No (If Yes, attach and label manufacturer guarantee)	

	Pollutant Controlled					
	PM	PM10	SO_2	NOx	VOC	CO
Control Efficiency						

21. If manufacturer's data is not available, attach a separate sheet of paper to provide the control equipment design specifications and performance data to support the above mentioned control efficiency.

EMISSION UNIT OPERATING SCHEDULE (hours/day, hours/year, or other)

22.	Actual Operation:	UP TO 8,760 HOURS PER YEAR DEPENDING ON DEMAND
23.	Maximum Operation:	8,760 HOURS PER YEAR

REQUESTED LIMITS

24.	Are you requesting any permit limits?	☐ Yes ☒ No (If Yes, indicate all that apply below)
	☐ Operation Hour Limit(s):	
	☐ Production Limit(s):	
	☐ Material Usage Limit(s):	
	☐ Limits Based on Stack Testing:	Please attach all relevant stack testing summary reports
	☐ Other:	
25.	Rationale for Requesting the Limit(s):	

DEQ AIR QUALITY PROGRAM
1410 N. Hilton, Boise, ID 83706
For assistance, call the
Air Permit Hotline – 1-877-5PERMIT

Emissions Unit - General **Form EU0**
Revision 4
08/28/08

Please see instructions on page 2 before filling out the form.

IDENTIFICATION

1. Company Name:	2. Facility Name:	3. Facility ID No:
Nunhems USA, Inc	Nunhems Parma	

4. Brief Project Description:	Minor source permit for existing carrot and onion seed processing facility

EMISSIONS UNIT (PROCESS) IDENTIFICATION & DESCRIPTION

5.	Emissions Unit (EU) Name:	CARRIER 180,000 BTU PROPANE HVAC (2 UNITS)
6.	EU ID Number:	
7.	EU Type:	☐ New Source ☒ Unpermitted Existing Source ☐ Modification to a Permitted Source -- Previous Permit #: Date Issued:
8.	Manufacturer:	CARRIER
9.	Model:	48TF004-14-F008
10..	Maximum Capacity:	180,000 BTU
11.	Date of Construction:	UNKNOWN
12.	Date of Modification (if any):	
13.	Is this a Controlled Emission Unit?	☒ No ☐ Yes If Yes, complete the following section. If No, go to line 22.

EMISSIONS CONTROL EQUIPMENT

14. Control Equipment Name and ID:		
15. Date of Installation:	16. Date of Modification (if any):	
17. Manufacturer and Model Number:		
18. ID(s) of Emission Unit Controlled:		
19. Is operating schedule different than emission units(s) involved?	☐ Yes ☐ No	
20. Does the manufacturer guarantee the control efficiency of the control equipment?	☐ Yes ☐ No (If Yes, attach and label manufacturer guarantee)	

	Pollutant Controlled					
	PM	PM10	SO_2	NOx	VOC	CO
Control Efficiency						

21. If manufacturer's data is not available, attach a separate sheet of paper to provide the control equipment design specifications and performance data to support the above mentioned control efficiency.

EMISSION UNIT OPERATING SCHEDULE (hours/day, hours/year, or other)

22.	Actual Operation:	UP TO 8,760 HOURS PER YEAR DEPENDING ON DEMAND
23.	Maximum Operation:	8,760 HOURS PER YEAR

REQUESTED LIMITS

24.	Are you requesting any permit limits?	☐ Yes ☒ No (If Yes, indicate all that apply below)
	☐ Operation Hour Limit(s):	
	☐ Production Limit(s):	
	☐ Material Usage Limit(s):	
	☐ Limits Based on Stack Testing:	Please attach all relevant stack testing summary reports
	☐ Other:	
25.	Rationale for Requesting the Limit(s):	

DEQ AIR QUALITY PROGRAM
1410 N. Hilton, Boise, ID 83706
For assistance, call the
Air Permit Hotline – 1-877-5PERMIT

Emissions Unit - General **Form EU0**
Revision 4
08/28/08

Please see instructions on page 2 before filling out the form.

IDENTIFICATION

1. Company Name:	2. Facility Name:	3. Facility ID No:
Nunhems USA, Inc	Nunhems Parma	

4. Brief Project Description:	Minor source permit for existing carrot and onion seed processing facility

EMISSIONS UNIT (PROCESS) IDENTIFICATION & DESCRIPTION

5.	Emissions Unit (EU) Name:	BUILDING L DRYER
6.	EU ID Number:	DRYER01A
7.	EU Type:	☐ New Source ☒ Unpermitted Existing Source ☐ Modification to a Permitted Source -- Previous Permit #: Date Issued:
8.	Manufacturer:	
9.	Model:	
10..	Maximum Capacity:	1,000,000 BTU/HR
11.	Date of Construction:	2008
12.	Date of Modification (if any):	
13.	Is this a Controlled Emission Unit?	☒ No ☐ Yes If Yes, complete the following section. If No, go to line 22.

EMISSIONS CONTROL EQUIPMENT

14. Control Equipment Name and ID:		
15. Date of Installation:	16. Date of Modification (if any):	
17. Manufacturer and Model Number:		
18. ID(s) of Emission Unit Controlled:		
19. Is operating schedule different than emission units(s) involved?	☐ Yes ☐ No	
20. Does the manufacturer guarantee the control efficiency of the control equipment?	☐ Yes ☐ No (If Yes, attach and label manufacturer guarantee)	

	Pollutant Controlled					
	PM	PM10	SO_2	NOx	VOC	CO
Control Efficiency						

21. If manufacturer's data is not available, attach a separate sheet of paper to provide the control equipment design specifications and performance data to support the above mentioned control efficiency.

EMISSION UNIT OPERATING SCHEDULE (hours/day, hours/year, or other)

22.	Actual Operation:	8760 HOURS PER YEAR
23.	Maximum Operation:	8,760 HOURS PER YEAR

REQUESTED LIMITS

24.	Are you requesting any permit limits?	☐ Yes ☒ No (If Yes, indicate all that apply below)
	☐ Operation Hour Limit(s):	
	☐ Production Limit(s):	
	☐ Material Usage Limit(s):	
	☐ Limits Based on Stack Testing:	Please attach all relevant stack testing summary reports
	☐ Other:	
25.	Rationale for Requesting the Limit(s):	

DEQ AIR QUALITY PROGRAM
1410 N. Hilton, Boise, ID 83706
For assistance, call the
Air Permit Hotline – 1-877-5PERMIT

Emissions Unit - General **Form EU0**
Revision 4
08/28/08

Please see instructions on page 2 before filling out the form.

IDENTIFICATION

1. Company Name:	2. Facility Name:	3. Facility ID No:
Nunhems USA, Inc	Nunhems Parma	

4. Brief Project Description:	Minor source permit for existing carrot and onion seed processing facility

EMISSIONS UNIT (PROCESS) IDENTIFICATION & DESCRIPTION

5.	Emissions Unit (EU) Name:	BUILDING L DRYER
6.	EU ID Number:	DRYER01B
7.	EU Type:	☐ New Source ☒ Unpermitted Existing Source ☐ Modification to a Permitted Source -- Previous Permit #: Date Issued:
8.	Manufacturer:	
9.	Model:	
10..	Maximum Capacity:	1,000,000 BTU/HR
11.	Date of Construction:	2008
12.	Date of Modification (if any):	
13.	Is this a Controlled Emission Unit?	☒ No ☐ Yes If Yes, complete the following section. If No, go to line 22.

EMISSIONS CONTROL EQUIPMENT

14. Control Equipment Name and ID:		
15. Date of Installation:	16. Date of Modification (if any):	
17. Manufacturer and Model Number:		
18. ID(s) of Emission Unit Controlled:		
19. Is operating schedule different than emission units(s) involved?	☐ Yes ☐ No	
20. Does the manufacturer guarantee the control efficiency of the control equipment?	☐ Yes ☐ No (If Yes, attach and label manufacturer guarantee)	

	Pollutant Controlled					
	PM	PM10	SO_2	NOx	VOC	CO
Control Efficiency						

21. If manufacturer's data is not available, attach a separate sheet of paper to provide the control equipment design specifications and performance data to support the above mentioned control efficiency.

EMISSION UNIT OPERATING SCHEDULE (hours/day, hours/year, or other)

22.	Actual Operation:	8760 HOURS PER YEAR
23.	Maximum Operation:	8,760 HOURS PER YEAR

REQUESTED LIMITS

24.	Are you requesting any permit limits?	☐ Yes ☒ No (If Yes, indicate all that apply below)
	☐ Operation Hour Limit(s):	
	☐ Production Limit(s):	
	☐ Material Usage Limit(s):	
	☐ Limits Based on Stack Testing:	Please attach all relevant stack testing summary reports
	☐ Other:	
25.	Rationale for Requesting the Limit(s):	

DEQ AIR QUALITY PROGRAM
1410 N. Hilton, Boise, ID 83706
For assistance, call the
Air Permit Hotline – 1-877-5PERMIT

Emissions Unit - General **Form EU0**
Revision 4
08/28/08

Please see instructions on page 2 before filling out the form.

IDENTIFICATION

1. Company Name:	2. Facility Name:	3. Facility ID No:
Nunhems USA, Inc	Nunhems Parma	

4. Brief Project Description:	Minor source permit for existing carrot and onion seed processing facility

EMISSIONS UNIT (PROCESS) IDENTIFICATION & DESCRIPTION

5.	Emissions Unit (EU) Name:	SEED DRYER NORTH OF BUILDING K
6.	EU ID Number:	DRYER02
7.	EU Type:	☐ New Source ☒ Unpermitted Existing Source ☐ Modification to a Permitted Source -- Previous Permit #: Date Issued:
8.	Manufacturer:	TWIN CITY FAN AND BLOWER CO
9.	Model:	UNKOWN
10..	Maximum Capacity:	2,500,000 BTU/HR
11.	Date of Construction:	2000
12.	Date of Modification (if any):	
13.	Is this a Controlled Emission Unit?	☒ No ☐ Yes If Yes, complete the following section. If No, go to line 22.

EMISSIONS CONTROL EQUIPMENT

14. Control Equipment Name and ID:		
15. Date of Installation:	16. Date of Modification (if any):	
17. Manufacturer and Model Number:		
18. ID(s) of Emission Unit Controlled:		
19. Is operating schedule different than emission units(s) involved?	☐ Yes ☐ No	
20. Does the manufacturer guarantee the control efficiency of the control equipment?	☐ Yes ☐ No (If Yes, attach and label manufacturer guarantee)	

	Pollutant Controlled					
	PM	PM10	SO_2	NOx	VOC	CO
Control Efficiency						

21. If manufacturer's data is not available, attach a separate sheet of paper to provide the control equipment design specifications and performance data to support the above mentioned control efficiency.

EMISSION UNIT OPERATING SCHEDULE (hours/day, hours/year, or other)

22.	Actual Operation:	8760 HOURS PER YEAR
23.	Maximum Operation:	8,760 HOURS PER YEAR

REQUESTED LIMITS

24.	Are you requesting any permit limits?	☐ Yes ☒ No (If Yes, indicate all that apply below)
	☐ Operation Hour Limit(s):	
	☐ Production Limit(s):	
	☐ Material Usage Limit(s):	
	☐ Limits Based on Stack Testing:	Please attach all relevant stack testing summary reports
	☐ Other:	
25.	Rationale for Requesting the Limit(s):	

DEQ AIR QUALITY PROGRAM
1410 N. Hilton, Boise, ID 83706
For assistance, call the
Air Permit Hotline – 1-877-5PERMIT

Emissions Unit - General **Form EU0**
Revision 4
08/28/08

Please see instructions on page 2 before filling out the form.

IDENTIFICATION

1. Company Name:	2. Facility Name:	3. Facility ID No:
Nunhems USA, Inc	Nunhems Parma	

4. Brief Project Description:	Minor source permit for existing carrot and onion seed processing facility

EMISSIONS UNIT (PROCESS) IDENTIFICATION & DESCRIPTION

5.	Emissions Unit (EU) Name:	Aerovent 2,000,000 BTU Propane dryer
6.	EU ID Number:	DRYER03
7.	EU Type:	☐ New Source ☒ Unpermitted Existing Source ☐ Modification to a Permitted Source -- Previous Permit #: Date Issued:
8.	Manufacturer:	AEROVENT
9.	Model:	CBS 270
10..	Maximum Capacity:	2,000,000 BTU
11.	Date of Construction:	
12.	Date of Modification (if any):	
13.	Is this a Controlled Emission Unit?	☒ No ☐ Yes If Yes, complete the following section. If No, go to line 22.

EMISSIONS CONTROL EQUIPMENT

14. Control Equipment Name and ID:		
15. Date of Installation:	16. Date of Modification (if any):	
17. Manufacturer and Model Number:		
18. ID(s) of Emission Unit Controlled:		
19. Is operating schedule different than emission units(s) involved?	☐ Yes ☐ No	
20. Does the manufacturer guarantee the control efficiency of the control equipment?	☐ Yes ☐ No (If Yes, attach and label manufacturer guarantee)	

	Pollutant Controlled					
	PM	PM10	SO_2	NOx	VOC	CO
Control Efficiency						

21. If manufacturer's data is not available, attach a separate sheet of paper to provide the control equipment design specifications and performance data to support the above mentioned control efficiency.

EMISSION UNIT OPERATING SCHEDULE (hours/day, hours/year, or other)

22.	Actual Operation:	
23.	Maximum Operation:	

REQUESTED LIMITS

24.	Are you requesting any permit limits?	☐ Yes ☐ No (If Yes, indicate all that apply below)
	☐ Operation Hour Limit(s):	
	☐ Production Limit(s):	
	☐ Material Usage Limit(s):	
	☐ Limits Based on Stack Testing:	Please attach all relevant stack testing summary reports
	☐ Other:	
25.	Rationale for Requesting the Limit(s):	

DEQ AIR QUALITY PROGRAM
1410 N. Hilton, Boise, ID 83706
For assistance, call the
Air Permit Hotline – 1-877-5PERMIT

Emissions Unit - General **Form EU0**
Revision 4
08/28/08

Please see instructions on page 2 before filling out the form.

IDENTIFICATION

1. Company Name:	2. Facility Name:	3. Facility ID No:
Nunhems USA, Inc	Nunhems Parma	

4. Brief Project Description:	Minor source permit for existing carrot and onion seed processing facility

EMISSIONS UNIT (PROCESS) IDENTIFICATION & DESCRIPTION

5.	Emissions Unit (EU) Name:	TWO IDENTICAL DRYERS VENTING OUT COMMON STACK
6.	EU ID Number:	DRYER04A
7.	EU Type:	☐ New Source ☒ Unpermitted Existing Source ☐ Modification to a Permitted Source -- Previous Permit #: Date Issued:
8.	Manufacturer:	
9.	Model:	
10..	Maximum Capacity:	500,000 BTU (2) EACH VENT OUT ONE STACK
11.	Date of Construction:	
12.	Date of Modification (if any):	
13.	Is this a Controlled Emission Unit?	☒ No ☐ Yes If Yes, complete the following section. If No, go to line 22.

EMISSIONS CONTROL EQUIPMENT

14. Control Equipment Name and ID:		
15. Date of Installation:	16. Date of Modification (if any):	
17. Manufacturer and Model Number:		
18. ID(s) of Emission Unit Controlled:		
19. Is operating schedule different than emission units(s) involved?	☐ Yes ☐ No	
20. Does the manufacturer guarantee the control efficiency of the control equipment?	☐ Yes ☐ No (If Yes, attach and label manufacturer guarantee)	

	Pollutant Controlled					
	PM	PM10	SO_2	NOx	VOC	CO
Control Efficiency						

21. If manufacturer's data is not available, attach a separate sheet of paper to provide the control equipment design specifications and performance data to support the above mentioned control efficiency.

EMISSION UNIT OPERATING SCHEDULE (hours/day, hours/year, or other)

22.	Actual Operation:	8760 HOURS PER YEAR
23.	Maximum Operation:	8760 HOURS PER YEAR

REQUESTED LIMITS

24.	Are you requesting any permit limits?	☐ Yes ☒ No (If Yes, indicate all that apply below)
	☐ Operation Hour Limit(s):	
	☐ Production Limit(s):	
	☐ Material Usage Limit(s):	
	☐ Limits Based on Stack Testing:	Please attach all relevant stack testing summary reports
	☐ Other:	
25.	Rationale for Requesting the Limit(s):	

DEQ AIR QUALITY PROGRAM
1410 N. Hilton, Boise, ID 83706
For assistance, call the
Air Permit Hotline – 1-877-5PERMIT

Emissions Unit - General **Form EU0**
Revision 4
08/28/08

Please see instructions on page 2 before filling out the form.

IDENTIFICATION

1. Company Name:	2. Facility Name:	3. Facility ID No:
Nunhems USA, Inc	Nunhems Parma	

4. Brief Project Description:	Minor source permit for existing carrot and onion seed processing facility

EMISSIONS UNIT (PROCESS) IDENTIFICATION & DESCRIPTION

5.	Emissions Unit (EU) Name:	THREE IDENTICAL DRYERS VENTING OUT COMMON STACK
6.	EU ID Number:	DRYER04B
7.	EU Type:	☐ New Source ☒ Unpermitted Existing Source ☐ Modification to a Permitted Source -- Previous Permit #: Date Issued:
8.	Manufacturer:	
9.	Model:	
10..	Maximum Capacity:	500,000 BTU (3) EACH VENT OUT ONE STACK
11.	Date of Construction:	
12.	Date of Modification (if any):	
13.	Is this a Controlled Emission Unit?	☒ No ☐ Yes If Yes, complete the following section. If No, go to line 22.

EMISSIONS CONTROL EQUIPMENT

14. Control Equipment Name and ID:		
15. Date of Installation:	16. Date of Modification (if any):	
17. Manufacturer and Model Number:		
18. ID(s) of Emission Unit Controlled:		
19. Is operating schedule different than emission units(s) involved?	☐ Yes ☐ No	
20. Does the manufacturer guarantee the control efficiency of the control equipment?	☐ Yes ☐ No (If Yes, attach and label manufacturer guarantee)	

	Pollutant Controlled					
	PM	PM10	SO_2	NOx	VOC	CO
Control Efficiency						

21. If manufacturer's data is not available, attach a separate sheet of paper to provide the control equipment design specifications and performance data to support the above mentioned control efficiency.

EMISSION UNIT OPERATING SCHEDULE (hours/day, hours/year, or other)

22.	Actual Operation:	8760 HOURS PER YEAR
23.	Maximum Operation:	8760 HOURS PER YEAR

REQUESTED LIMITS

24.	Are you requesting any permit limits?	☐ Yes ☒ No (If Yes, indicate all that apply below)
	☐ Operation Hour Limit(s):	
	☐ Production Limit(s):	
	☐ Material Usage Limit(s):	
	☐ Limits Based on Stack Testing:	Please attach all relevant stack testing summary reports
	☐ Other:	
25.	Rationale for Requesting the Limit(s):	

DEQ AIR QUALITY PROGRAM
1410 N. Hilton, Boise, ID 83706
For assistance, call the
Air Permit Hotline – 1-877-5PERMIT

Emissions Unit - General **Form EU0**
Revision 4
08/28/08

Please see instructions on page 2 before filling out the form.

IDENTIFICATION

1. Company Name:	2. Facility Name:	3. Facility ID No:
Nunhems USA, Inc	Nunhems Parma	

4. Brief Project Description:	Minor source permit for existing carrot and onion seed processing facility

EMISSIONS UNIT (PROCESS) IDENTIFICATION & DESCRIPTION

5. Emissions Unit (EU) Name:	ENERCO 80,000 BTU AREA HEATER (3 UNITS)
6. EU ID Number:	
7. EU Type:	☐ New Source ☒ Unpermitted Existing Source ☐ Modification to a Permitted Source -- Previous Permit #: Date Issued:
8. Manufacturer:	ENERCO
9. Model:	ERXL-80
10.. Maximum Capacity:	80,000 BTU
11. Date of Construction:	UNKNOWN
12. Date of Modification (if any):	
13. Is this a Controlled Emission Unit?	☒ No ☐ Yes If Yes, complete the following section. If No, go to line 22.

EMISSIONS CONTROL EQUIPMENT

14. Control Equipment Name and ID:	
15. Date of Installation:	16. Date of Modification (if any):
17. Manufacturer and Model Number:	
18. ID(s) of Emission Unit Controlled:	
19. Is operating schedule different than emission units(s) involved?	☐ Yes ☐ No
20. Does the manufacturer guarantee the control efficiency of the control equipment?	☐ Yes ☐ No (If Yes, attach and label manufacturer guarantee)

	Pollutant Controlled					
	PM	PM10	SO_2	NOx	VOC	CO
Control Efficiency						

21. If manufacturer's data is not available, attach a separate sheet of paper to provide the control equipment design specifications and performance data to support the above mentioned control efficiency.

EMISSION UNIT OPERATING SCHEDULE (hours/day, hours/year, or other)

22. Actual Operation:	UP TO 8,760 HOURS PER YEAR DEPENDING ON DEMAND
23. Maximum Operation:	8,760 HOURS PER YEAR

REQUESTED LIMITS

24. Are you requesting any permit limits?	☐ Yes ☒ No (If Yes, indicate all that apply below)
☐ Operation Hour Limit(s):	
☐ Production Limit(s):	
☐ Material Usage Limit(s):	
☐ Limits Based on Stack Testing:	Please attach all relevant stack testing summary reports
☐ Other:	
25. Rationale for Requesting the Limit(s):	

DEQ AIR QUALITY PROGRAM
1410 N. Hilton, Boise, ID 83706
For assistance, call the
Air Permit Hotline – 1-877-5PERMIT

Emissions Unit - General **Form EU0**
Revision 4
08/28/08

Please see instructions on page 2 before filling out the form.

IDENTIFICATION

1. Company Name:	2. Facility Name:	3. Facility ID No:
Nunhems USA, Inc	Nunhems Parma	

4. Brief Project Description:	Minor source permit for existing carrot and onion seed processing facility

EMISSIONS UNIT (PROCESS) IDENTIFICATION & DESCRIPTION

5.	Emissions Unit (EU) Name:	Goodman 90,000 BTU HVAC (2 UNITs)
6.	EU ID Number:	
7.	EU Type:	☐ New Source ☒ Unpermitted Existing Source ☐ Modification to a Permitted Source -- Previous Permit #: Date Issued:
8.	Manufacturer:	GOODMAN
9.	Model:	GP036
10..	Maximum Capacity:	90,000 BTU
11.	Date of Construction:	UNKNOWN
12.	Date of Modification (if any):	
13.	Is this a Controlled Emission Unit?	☒ No ☐ Yes If Yes, complete the following section. If No, go to line 22.

EMISSIONS CONTROL EQUIPMENT

14. Control Equipment Name and ID:		
15. Date of Installation:	16. Date of Modification (if any):	
17. Manufacturer and Model Number:		
18. ID(s) of Emission Unit Controlled:		
19. Is operating schedule different than emission units(s) involved?	☐ Yes ☐ No	
20. Does the manufacturer guarantee the control efficiency of the control equipment?	☐ Yes ☐ No (If Yes, attach and label manufacturer guarantee)	

	Pollutant Controlled					
	PM	PM10	SO_2	NOx	VOC	CO
Control Efficiency						

21. If manufacturer's data is not available, attach a separate sheet of paper to provide the control equipment design specifications and performance data to support the above mentioned control efficiency.

EMISSION UNIT OPERATING SCHEDULE (hours/day, hours/year, or other)

22.	Actual Operation:	UP TO 8,760 HOURS PER YEAR DEPENDING ON DEMAND
23.	Maximum Operation:	8,760 HOURS PER YEAR

REQUESTED LIMITS

24.	Are you requesting any permit limits?	☐ Yes ☒ No (If Yes, indicate all that apply below)
	☐ Operation Hour Limit(s):	
	☐ Production Limit(s):	
	☐ Material Usage Limit(s):	
	☐ Limits Based on Stack Testing:	Please attach all relevant stack testing summary reports
	☐ Other:	
25.	Rationale for Requesting the Limit(s):	

DEQ AIR QUALITY PROGRAM
1410 N. Hilton, Boise, ID 83706
For assistance, call the
Air Permit Hotline – 1-877-5PERMIT

Emissions Unit - General **Form EU0**
Revision 4
08/28/08

Please see instructions on page 2 before filling out the form.

IDENTIFICATION

1. Company Name:	2. Facility Name:	3. Facility ID No:
Nunhems USA, Inc	Nunhems Parma	

4. Brief Project Description:	Minor source permit for existing carrot and onion seed processing facility

EMISSIONS UNIT (PROCESS) IDENTIFICATION & DESCRIPTION

5.	Emissions Unit (EU) Name:	TWO PROCESS HEATERS IN BUILDING Q
6.	EU ID Number:	HEATER01
7.	EU Type:	☐ New Source ☒ Unpermitted Existing Source ☐ Modification to a Permitted Source -- Previous Permit #: Date Issued:
8.	Manufacturer:	RAE CORPORATION
9.	Model:	RCUAC4CD50-H$
10..	Maximum Capacity:	1,000,000 BTU/HR EACH
11.	Date of Construction:	2011
12.	Date of Modification (if any):	
13.	Is this a Controlled Emission Unit?	☒ No ☐ Yes If Yes, complete the following section. If No, go to line 22.

EMISSIONS CONTROL EQUIPMENT

14. Control Equipment Name and ID:		
15. Date of Installation:	16. Date of Modification (if any):	
17. Manufacturer and Model Number:		
18. ID(s) of Emission Unit Controlled:		
19. Is operating schedule different than emission units(s) involved?	☐ Yes ☐ No	
20. Does the manufacturer guarantee the control efficiency of the control equipment?	☐ Yes ☐ No (If Yes, attach and label manufacturer guarantee)	

	Pollutant Controlled					
	PM	PM10	SO_2	NOx	VOC	CO
Control Efficiency						

21. If manufacturer's data is not available, attach a separate sheet of paper to provide the control equipment design specifications and performance data to support the above mentioned control efficiency.

EMISSION UNIT OPERATING SCHEDULE (hours/day, hours/year, or other)

22.	Actual Operation:	8760 HOURS PER YEAR
23.	Maximum Operation:	8,760 HOURS PER YEAR

REQUESTED LIMITS

24.	Are you requesting any permit limits?	☐ Yes ☒ No (If Yes, indicate all that apply below)
	☐ Operation Hour Limit(s):	
	☐ Production Limit(s):	
	☐ Material Usage Limit(s):	
	☐ Limits Based on Stack Testing:	Please attach all relevant stack testing summary reports
	☐ Other:	
25.	Rationale for Requesting the Limit(s):	

DEQ AIR QUALITY PROGRAM
1410 N. Hilton, Boise, ID 83706
For assistance, call the
Air Permit Hotline – 1-877-5PERMIT

Emissions Unit - General **Form EU0**
Revision 4
08/28/08

Please see instructions on page 2 before filling out the form.

IDENTIFICATION

1. Company Name:	2. Facility Name:	3. Facility ID No:
Nunhems USA, Inc	Nunhems Parma	

4. Brief Project Description:	Minor source permit for existing carrot and onion seed processing facility

EMISSIONS UNIT (PROCESS) IDENTIFICATION & DESCRIPTION

5.	Emissions Unit (EU) Name:	FOUR PROCESS HEATERS (BUILDING L)
6.	EU ID Number:	HEATER02
7.	EU Type:	☐ New Source ☒ Unpermitted Existing Source ☐ Modification to a Permitted Source -- Previous Permit #: Date Issued:
8.	Manufacturer:	UNKNOWN
9.	Model:	UNKNOWN
10..	Maximum Capacity:	250,000 BTU/HR EACH
11.	Date of Construction:	1198
12.	Date of Modification (if any):	
13.	Is this a Controlled Emission Unit?	☒ No ☐ Yes If Yes, complete the following section. If No, go to line 22.

EMISSIONS CONTROL EQUIPMENT

14. Control Equipment Name and ID:	
15. Date of Installation:	16. Date of Modification (if any):
17. Manufacturer and Model Number:	
18. ID(s) of Emission Unit Controlled:	
19. Is operating schedule different than emission units(s) involved?	☐ Yes ☐ No
20. Does the manufacturer guarantee the control efficiency of the control equipment?	☐ Yes ☐ No (If Yes, attach and label manufacturer guarantee)

	Pollutant Controlled					
	PM	PM10	SO_2	NOx	VOC	CO
Control Efficiency						

21. If manufacturer's data is not available, attach a separate sheet of paper to provide the control equipment design specifications and performance data to support the above mentioned control efficiency.

EMISSION UNIT OPERATING SCHEDULE (hours/day, hours/year, or other)

22.	Actual Operation:	8760 HOURS PER YEAR
23.	Maximum Operation:	8,760 HOURS PER YEAR

REQUESTED LIMITS

24.	Are you requesting any permit limits?	☐ Yes ☒ No (If Yes, indicate all that apply below)
	☐ Operation Hour Limit(s):	
	☐ Production Limit(s):	
	☐ Material Usage Limit(s):	
	☐ Limits Based on Stack Testing:	Please attach all relevant stack testing summary reports
	☐ Other:	
25.	Rationale for Requesting the Limit(s):	

DEQ AIR QUALITY PROGRAM
1410 N. Hilton, Boise, ID 83706
For assistance, call the
Air Permit Hotline – 1-877-5PERMIT

Emissions Unit - General **Form EU0**
Revision 4
08/28/08

Please see instructions on page 2 before filling out the form.

IDENTIFICATION

1. Company Name:	2. Facility Name:	3. Facility ID No:
Nunhems USA, Inc	Nunhems Parma	

4. Brief Project Description:	Minor source permit for existing carrot and onion seed processing facility

EMISSIONS UNIT (PROCESS) IDENTIFICATION & DESCRIPTION

5.	Emissions Unit (EU) Name:	LENNOX 195,000 BTU PROPANE AREA HEATER (3 UNITS)
6.	EU ID Number:	
7.	EU Type:	☐ New Source ☒ Unpermitted Existing Source ☐ Modification to a Permitted Source -- Previous Permit #: Date Issued:
8.	Manufacturer:	LENNOX
9.	Model:	LF24-200A-6
10..	Maximum Capacity:	195,000 BTU
11.	Date of Construction:	UNKNOWN
12.	Date of Modification (if any):	
13.	Is this a Controlled Emission Unit?	☒ No ☐ Yes If Yes, complete the following section. If No, go to line 22.

EMISSIONS CONTROL EQUIPMENT

14. Control Equipment Name and ID:	
15. Date of Installation:	16. Date of Modification (if any):
17. Manufacturer and Model Number:	
18. ID(s) of Emission Unit Controlled:	
19. Is operating schedule different than emission units(s) involved?	☐ Yes ☐ No
20. Does the manufacturer guarantee the control efficiency of the control equipment?	☐ Yes ☐ No (If Yes, attach and label manufacturer guarantee)

	Pollutant Controlled					
	PM	PM10	SO_2	NOx	VOC	CO
Control Efficiency						

21. If manufacturer's data is not available, attach a separate sheet of paper to provide the control equipment design specifications and performance data to support the above mentioned control efficiency.

EMISSION UNIT OPERATING SCHEDULE (hours/day, hours/year, or other)

22.	Actual Operation:	UP TO 8,760 HOURS PER YEAR DEPENDING ON DEMAND
23.	Maximum Operation:	8,760 HOURS PER YEAR

REQUESTED LIMITS

24.	Are you requesting any permit limits?	☐ Yes ☒ No (If Yes, indicate all that apply below)
	☐ Operation Hour Limit(s):	
	☐ Production Limit(s):	
	☐ Material Usage Limit(s):	
	☐ Limits Based on Stack Testing:	Please attach all relevant stack testing summary reports
	☐ Other:	
25.	Rationale for Requesting the Limit(s):	

DEQ AIR QUALITY PROGRAM
1410 N. Hilton, Boise, ID 83706
For assistance, call the
Air Permit Hotline – 1-877-5PERMIT

Emissions Unit - General **Form EU0**
Revision 4
08/28/08

Please see instructions on page 2 before filling out the form.

IDENTIFICATION

1. Company Name:	2. Facility Name:	3. Facility ID No:
Nunhems USA, Inc	Nunhems Parma	

4. Brief Project Description:	Minor source permit for existing carrot and onion seed processing facility

EMISSIONS UNIT (PROCESS) IDENTIFICATION & DESCRIPTION

5.	Emissions Unit (EU) Name:	MODINE 75,000 BTU PROPANE AREA HEATER (1 UNIT)
6.	EU ID Number:	
7.	EU Type:	☐ New Source ☒ Unpermitted Existing Source ☐ Modification to a Permitted Source -- Previous Permit #: Date Issued:
8.	Manufacturer:	MODINE
9.	Model:	HD75AH0134
10..	Maximum Capacity:	75,000 BTU
11.	Date of Construction:	2004
12.	Date of Modification (if any):	
13.	Is this a Controlled Emission Unit?	☒ No ☐ Yes If Yes, complete the following section. If No, go to line 22.

EMISSIONS CONTROL EQUIPMENT

14. Control Equipment Name and ID:		
15. Date of Installation:	16. Date of Modification (if any):	
17. Manufacturer and Model Number:		
18. ID(s) of Emission Unit Controlled:		
19. Is operating schedule different than emission units(s) involved?	☐ Yes ☐ No	
20. Does the manufacturer guarantee the control efficiency of the control equipment?	☐ Yes ☐ No (If Yes, attach and label manufacturer guarantee)	

	Pollutant Controlled					
	PM	PM10	SO_2	NOx	VOC	CO
Control Efficiency						

21. If manufacturer's data is not available, attach a separate sheet of paper to provide the control equipment design specifications and performance data to support the above mentioned control efficiency.

EMISSION UNIT OPERATING SCHEDULE (hours/day, hours/year, or other)

22.	Actual Operation:	UP TO 8,760 HOURS PER YEAR DEPENDING ON DEMAND
23.	Maximum Operation:	8,760 HOURS PER YEAR

REQUESTED LIMITS

24.	Are you requesting any permit limits?	☐ Yes ☒ No (If Yes, indicate all that apply below)
	☐ Operation Hour Limit(s):	
	☐ Production Limit(s):	
	☐ Material Usage Limit(s):	
	☐ Limits Based on Stack Testing:	Please attach all relevant stack testing summary reports
	☐ Other:	
25.	Rationale for Requesting the Limit(s):	

DEQ AIR QUALITY PROGRAM
1410 N. Hilton, Boise, ID 83706
For assistance, call the
Air Permit Hotline – 1-877-5PERMIT

Emissions Unit - General **Form EU0**
Revision 4
08/28/08

Please see instructions on page 2 before filling out the form.

IDENTIFICATION

1. Company Name:	2. Facility Name:	3. Facility ID No:
Nunhems USA, Inc	Nunhems Parma	

4. Brief Project Description:	Minor source permit for existing carrot and onion seed processing facility

EMISSIONS UNIT (PROCESS) IDENTIFICATION & DESCRIPTION

5.	Emissions Unit (EU) Name:	MODINE 150,000 BTU PROPANE AREA HEATER (13 UNITS)
6.	EU ID Number:	
7.	EU Type:	☐ New Source ☒ Unpermitted Existing Source ☐ Modification to a Permitted Source -- Previous Permit #: Date Issued:
8.	Manufacturer:	MODINE
9.	Model:	TLP150H74
10..	Maximum Capacity:	150,000 BTU
11.	Date of Construction:	2001
12.	Date of Modification (if any):	
13.	Is this a Controlled Emission Unit?	☒ No ☐ Yes If Yes, complete the following section. If No, go to line 22.

EMISSIONS CONTROL EQUIPMENT

14. Control Equipment Name and ID:		
15. Date of Installation:	16. Date of Modification (if any):	
17. Manufacturer and Model Number:		
18. ID(s) of Emission Unit Controlled:		
19. Is operating schedule different than emission units(s) involved?	☐ Yes ☐ No	
20. Does the manufacturer guarantee the control efficiency of the control equipment?	☐ Yes ☐ No (If Yes, attach and label manufacturer guarantee)	

	Pollutant Controlled					
	PM	PM10	SO_2	NOx	VOC	CO
Control Efficiency						

21. If manufacturer's data is not available, attach a separate sheet of paper to provide the control equipment design specifications and performance data to support the above mentioned control efficiency.

EMISSION UNIT OPERATING SCHEDULE (hours/day, hours/year, or other)

22.	Actual Operation:	UP TO 8,760 HOURS PER YEAR DEPENDING ON DEMAND
23.	Maximum Operation:	8,760 HOURS PER YEAR

REQUESTED LIMITS

24.	Are you requesting any permit limits?	☐ Yes ☒ No (If Yes, indicate all that apply below)
	☐ Operation Hour Limit(s):	
	☐ Production Limit(s):	
	☐ Material Usage Limit(s):	
	☐ Limits Based on Stack Testing:	Please attach all relevant stack testing summary reports
	☐ Other:	
25.	Rationale for Requesting the Limit(s):	

DEQ AIR QUALITY PROGRAM
1410 N. Hilton, Boise, ID 83706
For assistance, call the
Air Permit Hotline – 1-877-5PERMIT

Emissions Unit - General **Form EU0**
Revision 4
08/28/08

Please see instructions on page 2 before filling out the form.

IDENTIFICATION

1. Company Name:	2. Facility Name:	3. Facility ID No:
Nunhems USA, Inc	Nunhems Parma	

4. Brief Project Description:	Minor source permit for existing carrot and onion seed processing facility

EMISSIONS UNIT (PROCESS) IDENTIFICATION & DESCRIPTION

5.	Emissions Unit (EU) Name:	MODINE 150,000 BTU PROPANE AREA HEATER (13 UNITS)
6.	EU ID Number:	
7.	EU Type:	☐ New Source ☒ Unpermitted Existing Source ☐ Modification to a Permitted Source -- Previous Permit #: Date Issued:
8.	Manufacturer:	MODINE
9.	Model:	TLP150H74
10..	Maximum Capacity:	150,000 BTU
11.	Date of Construction:	2001
12.	Date of Modification (if any):	
13.	Is this a Controlled Emission Unit?	☒ No ☐ Yes If Yes, complete the following section. If No, go to line 22.

EMISSIONS CONTROL EQUIPMENT

14. Control Equipment Name and ID:		
15. Date of Installation:	16. Date of Modification (if any):	
17. Manufacturer and Model Number:		
18. ID(s) of Emission Unit Controlled:		
19. Is operating schedule different than emission units(s) involved?	☐ Yes ☐ No	
20. Does the manufacturer guarantee the control efficiency of the control equipment?	☐ Yes ☐ No (If Yes, attach and label manufacturer guarantee)	

	Pollutant Controlled					
	PM	PM10	SO_2	NOx	VOC	CO
Control Efficiency						

21. If manufacturer's data is not available, attach a separate sheet of paper to provide the control equipment design specifications and performance data to support the above mentioned control efficiency.

EMISSION UNIT OPERATING SCHEDULE (hours/day, hours/year, or other)

22.	Actual Operation:	UP TO 8,760 HOURS PER YEAR DEPENDING ON DEMAND
23.	Maximum Operation:	8,760 HOURS PER YEAR

REQUESTED LIMITS

24.	Are you requesting any permit limits?	☐ Yes ☒ No (If Yes, indicate all that apply below)
	☐ Operation Hour Limit(s):	
	☐ Production Limit(s):	
	☐ Material Usage Limit(s):	
	☐ Limits Based on Stack Testing:	Please attach all relevant stack testing summary reports
	☐ Other:	
25.	Rationale for Requesting the Limit(s):	

DEQ AIR QUALITY PROGRAM
1410 N. Hilton, Boise, ID 83706
For assistance, call the
Air Permit Hotline – 1-877-5PERMIT

Emissions Unit - General **Form EU0**
Revision 4
08/28/08

Please see instructions on page 2 before filling out the form.

IDENTIFICATION

1. Company Name:	2. Facility Name:	3. Facility ID No:
Nunhems USA, Inc	Nunhems Parma	

4. Brief Project Description:	Minor source permit for existing carrot and onion seed processing facility

EMISSIONS UNIT (PROCESS) IDENTIFICATION & DESCRIPTION

5.	Emissions Unit (EU) Name:	REZNOR 75,000 BTU AREA HEATER (1 UNIT)
6.	EU ID Number:	
7.	EU Type:	☐ New Source ☒ Unpermitted Existing Source ☐ Modification to a Permitted Source -- Previous Permit #: Date Issued:
8.	Manufacturer:	REZNOR
9.	Model:	MODEL F UNIT HEATER
10..	Maximum Capacity:	75,000 BTU
11.	Date of Construction:	UNKNOWN
12.	Date of Modification (if any):	
13.	Is this a Controlled Emission Unit?	☒ No ☐ Yes If Yes, complete the following section. If No, go to line 22.

EMISSIONS CONTROL EQUIPMENT

14. Control Equipment Name and ID:		
15. Date of Installation:	16. Date of Modification (if any):	
17. Manufacturer and Model Number:		
18. ID(s) of Emission Unit Controlled:		
19. Is operating schedule different than emission units(s) involved?	☐ Yes ☐ No	
20. Does the manufacturer guarantee the control efficiency of the control equipment?	☐ Yes ☐ No (If Yes, attach and label manufacturer guarantee)	

	Pollutant Controlled					
	PM	PM10	SO_2	NOx	VOC	CO
Control Efficiency						

21. If manufacturer's data is not available, attach a separate sheet of paper to provide the control equipment design specifications and performance data to support the above mentioned control efficiency.

EMISSION UNIT OPERATING SCHEDULE (hours/day, hours/year, or other)

22.	Actual Operation:	UP TO 8,760 HOURS PER YEAR DEPENDING ON DEMAND
23.	Maximum Operation:	8,760 HOURS PER YEAR

REQUESTED LIMITS

24.	Are you requesting any permit limits?	☐ Yes ☒ No (If Yes, indicate all that apply below)
	☐ Operation Hour Limit(s):	
	☐ Production Limit(s):	
	☐ Material Usage Limit(s):	
	☐ Limits Based on Stack Testing:	Please attach all relevant stack testing summary reports
	☐ Other:	
25.	Rationale for Requesting the Limit(s):	

DEQ AIR QUALITY PROGRAM
1410 N. Hilton, Boise, ID 83706
For assistance, call the
Air Permit Hotline – 1-877-5PERMIT

Emissions Unit - General **Form EU0**
Revision 4
08/28/08

Please see instructions on page 2 before filling out the form.

IDENTIFICATION

1. Company Name:	2. Facility Name:	3. Facility ID No:
Nunhems USA, Inc	Nunhems Parma	

4. Brief Project Description:	Minor source permit for existing carrot and onion seed processing facility

EMISSIONS UNIT (PROCESS) IDENTIFICATION & DESCRIPTION

5.	Emissions Unit (EU) Name:	REZNOR 100,000 BTU AREA HEATER (2 UNITS)
6.	EU ID Number:	
7.	EU Type:	☐ New Source ☒ Unpermitted Existing Source ☐ Modification to a Permitted Source -- Previous Permit #: Date Issued:
8.	Manufacturer:	REZNOR
9.	Model:	MODEL F UNIT HEATER
10..	Maximum Capacity:	100,000 BTU
11.	Date of Construction:	UNKNOWN
12.	Date of Modification (if any):	
13.	Is this a Controlled Emission Unit?	☒ No ☐ Yes If Yes, complete the following section. If No, go to line 22.

EMISSIONS CONTROL EQUIPMENT

14. Control Equipment Name and ID:		
15. Date of Installation:	16. Date of Modification (if any):	
17. Manufacturer and Model Number:		
18. ID(s) of Emission Unit Controlled:		
19. Is operating schedule different than emission units(s) involved?	☐ Yes ☐ No	
20. Does the manufacturer guarantee the control efficiency of the control equipment?	☐ Yes ☐ No (If Yes, attach and label manufacturer guarantee)	

	Pollutant Controlled					
	PM	PM10	SO_2	NOx	VOC	CO
Control Efficiency						

21. If manufacturer's data is not available, attach a separate sheet of paper to provide the control equipment design specifications and performance data to support the above mentioned control efficiency.

EMISSION UNIT OPERATING SCHEDULE (hours/day, hours/year, or other)

22.	Actual Operation:	UP TO 8,760 HOURS PER YEAR DEPENDING ON DEMAND
23.	Maximum Operation:	8,760 HOURS PER YEAR

REQUESTED LIMITS

24.	Are you requesting any permit limits?	☐ Yes ☒ No (If Yes, indicate all that apply below)
	☐ Operation Hour Limit(s):	
	☐ Production Limit(s):	
	☐ Material Usage Limit(s):	
	☐ Limits Based on Stack Testing:	Please attach all relevant stack testing summary reports
	☐ Other:	
25.	Rationale for Requesting the Limit(s):	

DEQ AIR QUALITY PROGRAM
1410 N. Hilton, Boise, ID 83706
For assistance, call the
Air Permit Hotline – 1-877-5PERMIT

Emissions Unit - General **Form EU0**
Revision 4
08/28/08

Please see instructions on page 2 before filling out the form.

IDENTIFICATION

1. Company Name:	2. Facility Name:	3. Facility ID No:
Nunhems USA, Inc	Nunhems Parma	

4. Brief Project Description:	Minor source permit for existing carrot and onion seed processing facility

EMISSIONS UNIT (PROCESS) IDENTIFICATION & DESCRIPTION

5.	Emissions Unit (EU) Name:	REZNOR 125,000 BTU AREA HEATER (3 UNITS)
6.	EU ID Number:	
7.	EU Type:	☐ New Source ☒ Unpermitted Existing Source ☐ Modification to a Permitted Source -- Previous Permit #: Date Issued:
8.	Manufacturer:	REZNOR
9.	Model:	MODEL F UNIT HEATER
10..	Maximum Capacity:	125,000 BTU
11.	Date of Construction:	UNKNOWN
12.	Date of Modification (if any):	
13.	Is this a Controlled Emission Unit?	☒ No ☐ Yes If Yes, complete the following section. If No, go to line 22.

EMISSIONS CONTROL EQUIPMENT

14. Control Equipment Name and ID:		
15. Date of Installation:	16. Date of Modification (if any):	
17. Manufacturer and Model Number:		
18. ID(s) of Emission Unit Controlled:		
19. Is operating schedule different than emission units(s) involved?	☐ Yes ☐ No	
20. Does the manufacturer guarantee the control efficiency of the control equipment?	☐ Yes ☐ No (If Yes, attach and label manufacturer guarantee)	

	Pollutant Controlled					
	PM	PM10	SO_2	NOx	VOC	CO
Control Efficiency						

21. If manufacturer's data is not available, attach a separate sheet of paper to provide the control equipment design specifications and performance data to support the above mentioned control efficiency.

EMISSION UNIT OPERATING SCHEDULE (hours/day, hours/year, or other)

22.	Actual Operation:	UP TO 8,760 HOURS PER YEAR DEPENDING ON DEMAND
23.	Maximum Operation:	8,760 HOURS PER YEAR

REQUESTED LIMITS

24.	Are you requesting any permit limits?	☐ Yes ☒ No (If Yes, indicate all that apply below)
	☐ Operation Hour Limit(s):	
	☐ Production Limit(s):	
	☐ Material Usage Limit(s):	
	☐ Limits Based on Stack Testing:	Please attach all relevant stack testing summary reports
	☐ Other:	
25.	Rationale for Requesting the Limit(s):	

DEQ AIR QUALITY PROGRAM
1410 N. Hilton, Boise, ID 83706
For assistance, call the
Air Permit Hotline – 1-877-5PERMIT

Emissions Unit - General **Form EU0**
Revision 4
08/28/08

Please see instructions on page 2 before filling out the form.

IDENTIFICATION

1. Company Name:	2. Facility Name:	3. Facility ID No:
Nunhems USA, Inc	Nunhems Parma	

4. Brief Project Description:	Minor source permit for existing carrot and onion seed processing facility

EMISSIONS UNIT (PROCESS) IDENTIFICATION & DESCRIPTION

5.	Emissions Unit (EU) Name:	REZNOR 200,000 BTU AREA HEATER (1 UNIT)
6.	EU ID Number:	
7.	EU Type:	☐ New Source ☒ Unpermitted Existing Source ☐ Modification to a Permitted Source -- Previous Permit #: Date Issued:
8.	Manufacturer:	REZNOR
9.	Model:	MODEL F UNIT HEATER
10..	Maximum Capacity:	200,000 BTU
11.	Date of Construction:	UNKNOWN
12.	Date of Modification (if any):	
13.	Is this a Controlled Emission Unit?	☒ No ☐ Yes If Yes, complete the following section. If No, go to line 22.

EMISSIONS CONTROL EQUIPMENT

14. Control Equipment Name and ID:	
15. Date of Installation:	16. Date of Modification (if any):
17. Manufacturer and Model Number:	
18. ID(s) of Emission Unit Controlled:	
19. Is operating schedule different than emission units(s) involved?	☐ Yes ☐ No
20. Does the manufacturer guarantee the control efficiency of the control equipment?	☐ Yes ☐ No (If Yes, attach and label manufacturer guarantee)

	Pollutant Controlled					
	PM	PM10	SO_2	NOx	VOC	CO
Control Efficiency						

21. If manufacturer's data is not available, attach a separate sheet of paper to provide the control equipment design specifications and performance data to support the above mentioned control efficiency.

EMISSION UNIT OPERATING SCHEDULE (hours/day, hours/year, or other)

22.	Actual Operation:	UP TO 8,760 HOURS PER YEAR DEPENDING ON DEMAND
23.	Maximum Operation:	8,760 HOURS PER YEAR

REQUESTED LIMITS

24.	Are you requesting any permit limits?	☐ Yes ☒ No (If Yes, indicate all that apply below)
	☐ Operation Hour Limit(s):	
	☐ Production Limit(s):	
	☐ Material Usage Limit(s):	
	☐ Limits Based on Stack Testing:	Please attach all relevant stack testing summary reports
	☐ Other:	
25.	Rationale for Requesting the Limit(s):	

DEQ AIR QUALITY PROGRAM
1410 N. Hilton, Boise, ID 83706
For assistance, call the
Air Permit Hotline – 1-877-5PERMIT

Emissions Unit - General **Form EU0**
Revision 4
08/28/08

Please see instructions on page 2 before filling out the form.

IDENTIFICATION

1. Company Name:	2. Facility Name:	3. Facility ID No:
Nunhems USA, Inc	Nunhems Parma	

4. Brief Project Description:	Minor source permit for existing carrot and onion seed processing facility

EMISSIONS UNIT (PROCESS) IDENTIFICATION & DESCRIPTION

5.	Emissions Unit (EU) Name:	YORK 45,000 BTU PROPANE HVAC (4 UNITS)
6.	EU ID Number:	
7.	EU Type:	☐ New Source ☒ Unpermitted Existing Source ☐ Modification to a Permitted Source -- Previous Permit #: Date Issued:
8.	Manufacturer:	YORK
9.	Model:	D2NY024NO3606NXA (similar to ZF036)
10..	Maximum Capacity:	45,000 BTU
11.	Date of Construction:	UNKNOWN
12.	Date of Modification (if any):	
13.	Is this a Controlled Emission Unit?	☒ No ☐ Yes If Yes, complete the following section. If No, go to line 22.

EMISSIONS CONTROL EQUIPMENT

14. Control Equipment Name and ID:	
15. Date of Installation:	16. Date of Modification (if any):
17. Manufacturer and Model Number:	
18. ID(s) of Emission Unit Controlled:	
19. Is operating schedule different than emission units(s) involved?	☐ Yes ☐ No
20. Does the manufacturer guarantee the control efficiency of the control equipment?	☐ Yes ☐ No (If Yes, attach and label manufacturer guarantee)

	Pollutant Controlled					
	PM	PM10	SO_2	NOx	VOC	CO
Control Efficiency						

21. If manufacturer's data is not available, attach a separate sheet of paper to provide the control equipment design specifications and performance data to support the above mentioned control efficiency.

EMISSION UNIT OPERATING SCHEDULE (hours/day, hours/year, or other)

22.	Actual Operation:	UP TO 8,760 HOURS PER YEAR DEPENDING ON DEMAND
23.	Maximum Operation:	8,760 HOURS PER YEAR

REQUESTED LIMITS

24.	Are you requesting any permit limits?	☐ Yes ☒ No (If Yes, indicate all that apply below)
	☐ Operation Hour Limit(s):	
	☐ Production Limit(s):	
	☐ Material Usage Limit(s):	
	☐ Limits Based on Stack Testing:	Please attach all relevant stack testing summary reports
	☐ Other:	
25.	Rationale for Requesting the Limit(s):	

DEQ AIR QUALITY PROGRAM
1410 N. Hilton, Boise, ID 83706
For assistance, call the
Air Permit Hotline - 1-877-5PERMIT

PERMIT TO CONSTRUCT APPLICATION

Revision 3
4/5/2007

Please see instructions on page 2 before filling out the form.

Company Name:	Nunhems USA
Facility Name:	Nunhems Parma
Facility ID No.:	
Brief Project Description:	Minor source existing carrot and onion seed processing facility

SUMMARY OF AIR IMPACT ANALYSIS RESULTS - CRITERIA POLLUTANTS

		1.		2.	3.	4.		5.
Criteria Pollutants	**Averaging Period**	**Significant Impact Analysis Results (µg/m3)**	**Significant Contribution Level (µg/m3)**	**Full Impact Analysis Results (µg/m3)**	**Background Concentration (µg/m3)**	**Total Ambient Impact (µg/m3)**	**NAAQS (µg/m3)**	**Percent of NAAQS**
PM_{10}	24-hour		5				150	
	Annual		1				50	
SO_2	3-hr		25				1300	
	24-hr		5				365	
	Annual		1				80	
NO_2	Annual		1				100	
CO	1-hr		2000				10000	
	8-hr		500				40000	

DEQ AIR QUALITY PROGRAM
1410 N. Hilton, Boise, ID 83706
For assistance, call the
Air Permit Hotline - 1-877-5PERMIT

PERMIT TO CONSTRUCT APPLICATION

Revision 3
3/27/2007

Please see instructions on page 2 before filling out the form.

Company Name:	Nunhems, USA
Facility Name:	Nunhems Parma
Facility ID No.:	
Brief Project Description:	Minor source existing carrot and onion seed processing facility

POINT SOURCE STACK PARAMETERS

1.	2.	3a.	3b.	4.	5.	6.	7.	8.	9.	10.
Emissions units	**Stack ID**	**UTM Easting (m)**	**UTM Northing (m)**	**Base Elevation (m)**	**Stack Height (m)**	**Modeled Diameter (m)**	**Stack Exit Temperature (K)**	**Stack Exit Flowrate (acfm)**	**Stack Exit Velocity (m/s)**	**Stack orientation (e.g., horizontal, rain cap)**
Point Source(s)										
Cummins Generator	CUMGEN	504,002.54	4,857,999.40	691.40	4.57	0.41	763.70	12,065.00	43.90	Vert/rain
Caterpillar Generator	CATGEN	503,760.00	4,857,808.00	693.50	3.35	0.18	729.76	3,051.26	58.00	Vert/rain
Generac Generator	GENGEN	503,994.00	4,857,784.00	693.50	1.52	0.08	783.15	848.00	87.76	Vert/rain
Dust collector 01	DC01	504,094.24	4,857,951.70	692.40	8.23	1.30	295.96		0.00	Horizontal
Dust collector 02	DC02	504,093.46	4,857,938.95	692.50	8.23	1.30	295.96		0.00	Horizontal
Dust collector 03	DC03	504,094.46	4,857,923.47	692.50	8.23	1.30	295.96		0.00	Horizontal
Dust collector 04	DC04	504,103.45	4,857,895.99	692.20	8.23	1.02	295.96		0.00	Horizontal
Dust collector 05	DC05	504,108.94	4,857,895.99	692.40	8.23	0.99	295.96		0.00	Horizontal
Dust collector 06	DC06	504,114.44	4,857,895.49	692.60	8.23	1.30	295.96		0.00	Horizontal
Dust collector 07	DC07	504,125.43	4,857,896.49	693.00	8.23	0.52	295.96		0.00	Horizontal
Dust collector 08	DC08	504,133.92	4,857,894.50	693.30	8.23	1.30	295.96		0.00	Horizontal
FARR Dust Collector 01	FARR01	504,009.04	4,857,931.96	690.77	9.12	0.46	295.96		0.00	Horizontal
FARR Dust Collector 02	FARR02	504,013.03	4,857,932.96	690.83	9.04	0.46	295.96		0.00	Horizontal
FARR Dust Collector 03	FARR03	504,039.00	4,857,934.00	690.90	9.04	0.46	295.96		0.00	Horizontal
FARR Dust Collector 04	FARR04	504,054.00	4,857,934.00	691.12	9.04	0.46	295.96		0.00	Horizontal
FARR Dust Collector 05	FARR05	504,083.89	4,857,857.00	693.79	6.55	0.46	295.96		0.00	Horizontal
FARR Dust Collector 06	FARR06	504,084.00	4,857,861.00	693.79	6.55	0.46	295.96		0.00	Horizontal
Murphy Rogers Baghouse	MRBH	504,034.00	4,857,990.90	691.90	9.14	0.30	295.96		0.00	Horizontal
Herding Dust Collector 01	HERD01	504,073.48	4,857,978.42	692.20	5.40	0.64	295.96		0.00	Horizontal
Herding Dust Collector 02	HERD02	504,073.98	4,857,954.94	692.00	8.28	0.76	295.96		0.00	Horizontal
Dryer 1A	DRYER1A	504,017.50	4,857,983.40	691.00	9.14	0.46	317.16	8,534.00	24.53	Vert/rain
Dryer 1B	DRYER1B	504,021.50	4,857,983.40	691.00	9.14	0.46	317.16	6,767.70	19.46	Vert/rain
Dryer 4A	DRYER4A	504,094.35	4,857,924.00	692.51	8.23	1.30	317.16		0.00	Horizontal
Dryer 4B	DRYER4B	504,102.55	4,857,895.74	692.17	8.23	1.02	317.16		0.00	Horizontal

Building A Heater 1 (Modine)	HEAT03	503,903.80	4,857,891.90	694.67	5.49	0.10	334.26		0.00	Horizontal
Building A Heater 2 (Modine)	HEAT04	503,894.40	4,857,864.50	694.67	5.49	0.10	334.26		0.00	Horizontal
Building A Heater 3 (ADP)	HEAT05	503,926.70	4,857,864.70	694.67	5.49	0.10	328.71		0.00	Horizontal
Building A Heater 4 (Modine)	HEAT06	503,894.50	4,857,841.20	694.67	5.49	0.10	334.26		0.00	Horizontal
Building A Heater 5 (Modine)	HEAT07	503,918.52	4,857,834.80	694.67	6.71	0.10	334.26	600.00	35.00	Vert/rain
Building A Heater 6 (Modine)	HEAT08	503,917.00	4,857,814.60	694.67	9.75	0.10	334.26	600.00	35.00	Vert/rain
Building A HVAC 01 (Goodman)	HVAC01	503,918.60	4,857,855.00	694.67	6.71	0.10	334.26	360.00	21.00	Vert/Rain
Building A HVAC 02 (Goodman)	HVAC02	503,918.00	4,857,852.50	694.67	6.71	0.10	334.26	360.00	21.00	Vert/Rain
Building G Propane Heater 1	HEAT09	504,055.10	4,857,807.70	692.30	5.18	0.13	334.26		0.00	Horizontal
Building G Propane Heater 2	HEAT10	504,077.50	4,857,807.70	692.30	5.18	0.10	334.26		0.00	Horizontal
Building H Propane Heater 1	HEAT11	504,053.40	4,857,856.00	690.75	5.18	0.15	334.26		0.00	Horizontal
Building H Propane Heater 2	HEAT12	504,032.80	4,857,856.00	690.75	5.18	0.10	334.26		0.00	Horizontal
Building K Propane Heater 1	HEAT13	504,068.34	4,857,855.90	690.75	4.27	0.10	334.26		0.00	Horizontal
Building K Propane Heater 2	HEAT14	504,042.10	4,857,875.90	690.75	7.32	0.10	334.26		0.00	Horizontal
Building K Propane Heater 3	HEAT15	504,022.80	4,857,875.90	690.75	7.32	0.10	334.26		0.00	Horizontal
Building K Propane Heater 4	HEAT16	504,011.20	4,857,906.80	690.75	6.40	0.10	334.26		0.00	Horizontal
Building K Propane Heater 5	HEAT17	504,049.50	4,857,914.20	690.75	6.40	0.10	334.26		0.00	Horizontal
Building K Propane Heater 6	HEAT18	504,076.58	4,857,898.62	690.75	5.79	0.10	334.26	600.00	35.00	Vertical/rain
Building K Propane Heater 7	HEAT19	504,074.35	4,857,894.81	690.75	5.79	0.10	329.26	320.00	18.70	Vertical/rain
Building K Propane Heater 8	HEAT20	504,074.35	4,857,888.85	690.75	5.79	0.10	329.26	320.00	18.70	Vertical/rain
Building K Propane Heater 9	HEAT21	504,074.35	4,857,882.10	690.75	5.79	0.10	329.26	320.00	18.70	Vertical/rain
Building L Furnace 1	HVAC03	503,988.36	4,857,946.15	691.75	8.53	0.05	323.15	120.00	28.17	Vert/rain
Building L Furnace 2	HVAC04	503,988.32	4,857,947.34	691.75	8.53	0.05	323.15	120.00	28.17	Vert/rain
Building L Furnace 3	HVAC05	503,987.68	4,857,947.38	691.75	8.53	0.05	323.15	120.00	28.17	Vert/rain
Building L Furnace 4	HVAC06	503,987.93	4,857,947.93	691.75	8.53	0.05	323.15	120.00	28.17	Vert/rain
Building L Propane Heater 1	HEAT22	504,046.65	4,857,950.59	691.75	8.53	0.13	329.26	158.40	5.90	Vertical/rain
Building L Propane Heater 2	HEAT23	504,030.35	4,857,942.61	691.75	8.53	0.20	329.26	430.20	6.20	Vertical/rain
Building L Propane Heater 3	HEAT24	504,022.72	4,857,976.05	691.75	8.53	0.15	329.26	266.70	6.90	Vertical/rain
Building L Propane Heater 4	HEAT25	504,006.85	4,857,984.17	691.75	8.53	0.18	329.26	357.70	6.80	Vertical/rain
Building L Propane Heater 5	HEAT26	504,001.55	4,857,939.04	691.75	8.53	0.18	329.26	357.70	6.80	Vertical/rain
Building L Propane Heater 6	HEAT27	503,980.84	4,857,984.24	691.75	8.53	0.18	329.26	357.70	6.80	Vertical/rain
Building L Propane Heater 7	HEAT28	504,058.65	4,857,983.61	691.75	8.53	0.15	329.26	266.70	6.90	Vertical/rain
Building M Propane Heater 1	HEAT29	503,943.60	4,857,921.80	690.54	4.42	0.13	334.26		0.00	Horizontal
Building M Propane Heater 2	HEAT30	503,932.95	4,857,921.80	690.54	4.42	0.13	334.26		0.00	Horizontal
Building M HVAC 1	HVAC07	503,931.60	4,857,945.50	690.54	5.33	0.08	334.26		0.00	Horizontal
Building M HVAC 2	HVAC08	503,923.90	4,857,945.50	690.54	5.33	0.08	334.26		0.00	Horizontal
Building M HVAC 3	HVAC09	503,923.80	4,857,951.10	690.54	5.33	0.08	334.26		0.00	Horizontal
Building M HVAC 4	HVAC10	503,933.40	4,857,951.70	690.54	5.33	0.08	334.26		0.00	Horizontal

Building M HVAC 5	HVAC11	503,919.40	4,857,953.40	690.54	5.33	1.00	344.26	1,850.00	1.11	Vertical
Building P HVAC 1 (modine)	HVAC12	504,118.20	4,857,966.90	692.52	11.58	0.02	353.71		0.00	Horizontal
Building P HVAC 2 (Cambridge)	HVAC13	504,124.40	4,857,944.00	692.52	10.06	0.02	344.26		0.00	Horizontal
Building P HVAC 3 (cambridge)	HVAC14	504,159.80	4,857,940.90	692.52	10.06	0.02	344.26		0.00	Horizontal
Building P HVAC 4 (cambridge)	HVAC15	504,127.90	4,857,908.20	692.52	10.06	0.02	344.26		0.00	Horizontal
Building P HVAC 5 (cambridge)	HVAC16	504,163.30	4,857,902.40	692.52	10.06	0.02	344.26		0.00	Horizontal
Building P HVAC 6 (york)	HVAC17	504,178.90	4,857,916.10	692.52	10.06	0.02	323.15		0.00	Horizontal
Building P HVAC 7 (york)	HVAC18	504,179.90	4,857,912.70	692.52	10.06	0.02	323.15		0.00	Horizontal
Building P HVAC 8 (york)	HVAC19	504,179.20	4,857,910.40	692.52	10.06	0.02	323.15		0.00	Horizontal
Building P HVAC 9 (york)	HVAC20	504,182.10	4,857,905.60	692.52	10.06	0.02	323.15		0.00	Horizontal
Building N HVAC 1 (big)	HVAC21	503,705.25	4,858,023.00	693.00	6.10	0.02	339.82		0.00	Horizontal
Building N HVAC 2	HVAC22	503,711.00	4,858,010.00	693.00	6.10	0.02	334.26		0.00	Horizontal
Building N HVAC 3	HVAC23	503,718.00	4,858,016.30	693.00	6.10	0.02	334.26		0.00	Horizontal
Building N HVAC 4 (big)	HVAC24	503,717.60	4,857,997.80	693.00	6.10	0.02	339.82		0.00	Horizontal
Building N HVAC 5	HVAC25	503,727.30	4,858,007.90	693.00	6.10	0.02	334.26		0.00	Horizontal
Building N HVAC 6	HVAC26	503,731.00	4,857,996.30	693.00	6.10	0.02	334.26		0.00	Horizontal
Building N HVAC 7	HVAC27	503,733.00	4,857,998.00	693.00	6.10	0.02	334.26		0.00	Horizontal
Building N HVAC 8	HVAC28	503,732.00	4,857,993.00	693.00	6.10	0.02	334.26		0.00	Horizontal
Building N HVAC 9	HVAC29	503,731.30	4,857,995.40	693.00	6.10	0.02	334.26		0.00	Horizontal
Building N HVAC 10	HVAC30	503,741.00	4,857,993.42	693.00	6.10	0.02	334.26		0.00	Horizontal
(insert more rows as needed)										

DEQ AIR QUALITY PROGRAM
1410 N. Hilton, Boise, ID 83706
For assistance, call the
Air Permit Hotline - 1-877-5PERMIT

PERMIT TO CONSTRUCT APPLICATION

Revision 3
4/5/2007

Please see instructions on page 2 before filling out the form.

Company Name:	Nunhems USA
Facility Name:	Nunhems Parma
Facility ID No.:	
Brief Project Description:	Minor source existing

FUGITIVE SOURCE PARAMETERS

1.	2.	3a.	3b.	4.	5.	6.	7.	8.	9.	10.
Emissions units	**Stack ID**	**UTM Easting (m)**	**UTM Northing (m)**	**Base Elevation (m)**	**Release Height (m)**	**Easterly Length (m)**	**Northerly Length (m)**	**Angle from North (°)**	**Initial Vertical Dimension (m)**	**Initial Horizontal Dimension (m)**
Area Source(s)										
Volume Source(s)										
Dryer 02	DRYER02	504,027.80	4,857,914.70	691.00	3.66				1.70	5.88
Dryer 03 (Aerovent)	DRYER03	503,970.00	4,858,023.00	691.40	3.66				1.70	1.91
Heater 01	HEAT01	504,135.50	4,857,833.00	694.60	3.05				1.42	3.76
Heater 02	HEAT02	504,047.00	4,857,932.70	691.00	3.05				1.42	2.41
(insert more rows as needed)										

DEQ AIR QUALITY PROGRAM
1410 N. Hilton, Boise, ID 83706
For assistance, call the
Air Permit Hotline - 1-877-5PERMIT

PERMIT TO CONSTRUCT APPLICATION

Revision 3
4/5/2007

Please see instructions on page 2 before filling out the form.

Company Name:	Nunhems USA
Facility Name:	Nunhems USA
Facility ID No.:	
Brief Project Description:	Initial facility wide modeling

BUILDING AND STRUCTURE INFORMATION

1.	2.	3.	4.	5.	6.	7.
Building ID Number	**Length (ft)**	**Width (ft)**	**Base Elevation (m)**	**Building Height (m)**	**Number of Tiers**	**Description/Comments**
Building A	340.00	100.00	694.67	9.14	2	
Building B	96.00	39.00	693.99	6.50	1	
Building C	51.00	38.00	691.98	4.88	1	
Building D,E,F	147.00	101.00	692.30	5.64	1	3 separate but identical buildings in close proximity
Building G	148.00	62.00	692.30	5.79	1	
Building H	139.00	42.00	690.75	7.62	1	
Building K	219.00	119.00	690.75	8.53	3	
Building L	328.00	160.00	690.75	7.92	1	
Building M	169.00	140.00	690.54	4.72	1	Building remodeled, includes attached greenhouses
Building N	208.00	70.00	693.00	5.49	1	admin building
Pbilding P	356.00	285.00	692.52	10.97	2	
Building Q	340.00	179.00	694.39	10.36	1	
Pumphouse	18.00	18.00	693.29	3.05	1	By Caterpillar generator
Fumigation	43.00	25.00	692.30	3.66	1	

Appendix E

Emission Estimates

Emission Units and Control Devices

Table 1 EMISSIONS UNIT AND CONTROL DEVICE INFORMATION

	Equipment	Capacity	Manufacturer	Model or Serial No.
Backup Generators	CAT C9-2008 3 Phase Diesel Generator (at pumphouse) / CAT GEN	NA	Caterpillar	Engine: 313 kVA, 250 kW, 60 Hertz; Generator: 480 volts.
	Stamford Cummins 3-Phase Diesel Generator / CUMMINS GEN	NA	Stamford Cummins	Engine: 2015 kVA Base Rate; 1612 kW (BR); 60 Hz; 1800 RPM. Generator: 480 Volts; 2423.7 Amps (BR).
	Generac 2000 Series 3-Phase Diesel Generator (South of Building "C") / GENERAC GEN	NA	Generac	Model #: 1526500100; 100 kVA. Serial #: 2062523 Generator: 120 Volts; 60 Hz; 240.6 Amps; 1800 RPM; 80 kW
Filtration Units	CSL Dust Collector No. 1 (DC-1) for Seed Conditioning	NA	Carothers & Sons, LTD.	Efficiency %: 99.995 Grain Loading gr/dscf: 0.0007 GSCFM Exhaust Volumetric Flow Rate: 34,900 CFM
	CSL Dust Collector No. 2 (DC-2) for Seed Conditioning	NA	Carothers & Sons, LTD.	Efficiency %: 99.995 Grain Loading gr/dscf: 0.0007 GSCFM Exhaust Volumetric Flow Rate: 34,900 CFM
	CSL Dust Collector No. 3 (DC-3) for Seed Conditioning	NA	Carothers & Sons, LTD.	Efficiency %: 99.995 Grain Loading gr/dscf: 0.0007 GSCFM Exhaust Volumetric Flow Rate: 35,000 CFM
	CSL Dust Collector No. 4 (DC-4) for Seed Conditioning	NA	Carothers & Sons, LTD.	Efficiency %: 99.995 Grain Loading gr/dscf: 0.0007 GSCFM Exhaust Volumetric Flow Rate: 12,800 CFM
	CSL Dust Collector No. 5 (DC-5) for Seed Conditioning	NA	Carothers & Sons, LTD.	Efficiency %: 99.995 Grain Loading gr/dscf: 0.0007 GSCFM Exhaust Volumetric Flow Rate: 20,000 CFM
	CSL Dust Collector No. 6 (DC-6) for Seed Conditioning	NA	Carothers & Sons, LTD.	Efficiency %: 99.995 Grain Loading gr/dscf: 0.0007 GSCFM Exhaust Volumetric Flow Rate: 32,500 CFM
	CSL Dust Collector No. 7 (DC-7) for Seed Conditioning	NA	Carothers & Sons, LTD.	Efficiency %: 99.995 Grain Loading gr/dscf: 0.0007 GSCFM Exhaust Volumetric Flow Rate: 6,800 CFM
	CSL Dust Collector No. 8 (DC-8) for Seed Packaging and Shipping	NA	Carothers & Sons, LTD.	Efficiency %: 99.995 Grain Loading gr/dscf: 0.0007 GSCFM Exhaust Volumetric Flow Rate: 25,000 CFM
	FARR Cartridge Collector No. 1 (FARR 1) for Seed Treatment (Film Coating)	NA	Camfil FARR Air Pollution Control	Camfil FARR APC warranties that the emissions from the collectors will not exceed 0.002 gr/dscf in overall particulate emissions, efficiency to be 99.99% on 0.5 micron particles and larger by weight. Serial #: 697544
	FARR Cartridge Collector No. 2 (FARR 2) for Seed Treatment (Film Coating)	NA	Camfil FARR Air Pollution Control	Camfil FARR APC warranties that the emissions from the collectors will not exceed 0.002 gr/dscf in overall particulate emissions, efficiency to be 99.99% on 0.5 micron particles and larger by weight. Serial #: 697544
	FARR Cartridge Collector No. 3 (FARR 3) for Seed Enhancement (Pelleting)	NA	Camfil FARR Air Pollution Control	Camfil FARR APC warranties that the emissions from the collectors will not exceed 0.002 gr/dscf in overall particulate emissions, efficiency to be 99.99% on 0.5 micron particles and larger by weight. Serial #: 660171
	FARR Cartridge Collector No. 4 (FARR 4) for Seed Enhancement (Pelleting)	NA	Camfil FARR Air Pollution Control	Camfil FARR APC warranties that the emissions from the collectors will not exceed 0.002 gr/dscf in overall particulate emissions, efficiency to be 99.99% on 0.5 micron particles and larger by weight. Serial #: 660171
	Murphy-Rodgers Baghouse (MR BH 1) for Seed Enhancement (Priming)	NA	Murphy-Rodgers, Inc	Capacity is 3,900 cfm @ 8" wg, 352 sq/ft of filter area with a realized air to filter ratio of approx. 11 to 1 The usual efficiency of dry filter units is 99.9% on particle sizes of 1 micron or larger. The efficiency as stated is after an initial run in period and the filters have had sufficient time to accumulate a dust cake. Model: MRM-12-4D
	Herding Filtration Unit No. 1 (HERD 1) for Seed Enhancement (Powder/Blending)	NA	Herding Filtration, LLC.	4700-7985 CFM - m3/h % Efficiency / Air Quality: <0.1mg/m3 (=0.0004 gr/ft3) or 99.97% @ 0.3micron Model: P-1899 HSL 1500-12/18 SZ
	Herding Filtration Unit No. 2 (HERD 2) for Seed Enhancement (Pelleting)	NA	Herding Filtration, LLC.	23200-39417 CFM - m3/h % Efficiency / Air Quality: <0.1mg/m3 (=0.0004 gr/ft3) or 99.97% @ 0.3micron Model: P-2112 Delta Sys 1500-144/9 (3KA) GZ
	FARR Cartridge Collector No. 5 (FARR 5) for Warehousing (Bulk Unloading)	NA	Camfil FARR Air Pollution Control	Camfil FARR APC warranties that the emissions from the collectors will not exceed 0.002 gr/dscf in overall particulate emissions, efficiency to be 99.99% on 0.5 micron particles and larger by weight. Serial # 634948-A

LPG Combustion	Two propane building heaters (“Q”) for temperature and humidity control (to dry scale out of onion umbels) / Heat 1	1,000,000 BTU/hr/unit	NA	NA
	Ten blower fans on south side of building "Q"	NA	NA	NA
	Eight fans off east side of building "G" for temperature and humidity control.	NA	NA	NA
	Twenty-Nine Total fans (Nine off of the east side of each of the "D" buildings) for temperature and humidity control.	NA	NA	NA
	Four building heaters south of building "L" / Heat 2	250,000 BTU/hr/unit	NA	NA
	Two Enclosed Propane Seed Dryers within building "L" for Seed Warehousing (Drying) / Dryer 1	1,000,000 BTU/hr/unit	NA	NA
	Seed Dryer northwest of building "K" for Seed Warehousing (Drying) / Dryer 2	2,500,000 BTU/hr/unit	NA	NA
Fumigation	Box chamber fumigation as part of Warehousing (fumigation) Process / Fume	length: 60' 9" Width: 9' 6" interior height: 13' 1" Interior volume: ~7580 cu. Ft	NA	NA

MM Btu/Hr = million Brithish thermal units per hour
NA = not available

CRITERIA POLLUTANTS PTE							
Source Descriptions	Emission Controls	PM-Total		PM-10*		PM-2.5*	
		lb/hr	T/yr	lb/hr	T/yr	lb/hr	T/yr
Backup Diesl Generators							
(3) Backup Diesel Generators	None	0.485	0.121	0.485	0.121	0.485	0.121
Filtration Units							
Seed Conditioning, Lines 3-4	DC-1 CSL Dust Collector	0.209	0.917	0.103	0.449	0.029	0.127
Seed Conditioning, AIM Blending Line	DC-2 CSL Dust Collector	0.209	0.917	0.103	0.449	0.029	0.127
Seed Conditioning, Line 1-2	DC-3 CSL Dust Collector	0.210	0.920	0.103	0.451	0.029	0.127
Seed Conditioning, Carrot Seed Brush	DC-4 CSL Dust Collector	0.077	0.336	0.038	0.165	0.011	0.046
Seed Conditioning, Scalping Lines 3-4	DC-5 CSL Dust Collector	0.120	0.526	0.059	0.258	0.017	0.073
Seed Conditioning, Scalping Lines 1-2	DC-6 CSL Dust Collector	0.195	0.854	0.096	0.419	0.027	0.118
Seed Conditioning, Scalping and Brush	DC-7 CSL Dust Collector	0.041	0.179	0.020	0.088	0.006	0.025
Seed Packaging and Shipping	DC-8 CSL Dust Collector	0.150	0.657	0.074	0.322	0.021	0.091
Seed Treatment (Film Coating)	(FARR 1) FARR Cartridge Collector No. 1	0.100	0.438	0.049	0.215	0.014	0.060
Seed Treatment (Film Coating)	(FARR 2) FARR Cartridge Collector No. 2	0.094	0.411	0.046	0.202	0.013	0.057
Seed Enhancement (Pelleting)	(FARR 3) FARR Cartridge Collector No. 3	0.112	0.491	0.055	0.241	0.015	0.068
Seed Enhancement (Pelleting)	(FARR 4) FARR Cartridge Collector No. 4	0.134	0.588	0.066	0.288	0.019	0.081
Warehousing (Bulk Unloading)	(FARR 5) FARR Cartridge Collector No. 5	0.182	0.798	0.089	0.391	0.025	0.110
Warehousing (Bulk Unloading)	(FARR 6) FARR Cartridge Collector No. 6	0.182	0.798	0.089	0.391	0.025	0.110
Seed Enhancement (Priming)	(MR BH 1) Murphy-Rodgers Baghouse	0.011	0.050	0.089	0.024	0.002	0.007
Seed Enhancement (Powder/Blending)	(HERD 1) Herding Filtration Unit No. 1	0.020	0.089	0.010	0.043	0.003	0.012
Seed Enhancement (Pelleting)	(HERD 2) Herding Filtration Unit No. 2	0.236	1.032	0.1155	0.506	0.0325	0.142
LPG Combustion							
Two propane building heaters (“Q”) for temperature and humidity control (Heater 1)	None	0.015	0.025	0.015	0.025	0.015	0.025
Four building heaters south of building "L" (Heater 2)	None	0.008	0.013	0.008	0.013	0.008	0.013
Enclosed Propane Seed Dryer within building "L" (Dryer 1A)	None	0.008	0.034	0.008	0.034	0.008	0.034
Enclosed Propane Seed Dryer within building "L" (Dryer 1B)		0.008	0.034	0.008	0.034	0.008	0.034
Seed Dryer northwest of building "K" (Dryer 2)	None	0.019	0.035	0.019	0.035	0.019	0.035
Seed Dryer northwest of building "L" (Dryer 3)	None	0.015	0.005	0.015	0.005	0.0153005	0.005
Seed Dryer inside Building L (2 500,000 BTU units, Vent through FARR03)	None	0.008	0.034	0.008	0.034	0.008	0.034
Seed Dryer inside Building L (3 500,000 BTU units, Vent through FARR04)	None	0.011	0.050	0.011	0.050	0.011	0.050
	FACILITY-WIDE TOTAL EMISSIONS	**2.83**	**10.26**	2.826	**5.16**	**0.86**	**1.64**

*PM-10 = particulate matter less than or equal to 10 um aerodynamic diameter. All particulate is assumed to be < or = 1 um in size.

CRITERIA POLLUTANTS PTE											
NO_x		CO		CO_2e		SO_x		VOC		Lead	
lb/hr	T/yr	lb/hr	T/yr	lb/hr	T/yr	lb/hr	T/yr	lb/hr	T/yr	lb/hr	T/yr
32.17	8.04	3.61	0.90	3,159.3	789.8	1.61	0.40	1.44	0.36	-	-
n/a	n/a	n/a	n/a	n/a	n/a	n/a	n/a	n/a	n/a	n/a	n/a
n/a	n/a	n/a	n/a	n/a	n/a	n/a	n/a	n/a	n/a	n/a	n/a
n/a	n/a	n/a	n/a	n/a	n/a	n/a	n/a	n/a	n/a	n/a	n/a
n/a	n/a	n/a	n/a	n/a	n/a	n/a	n/a	n/a	n/a	n/a	n/a
n/a	n/a	n/a	n/a	n/a	n/a	n/a	n/a	n/a	n/a	n/a	n/a
n/a	n/a	n/a	n/a	n/a	n/a	n/a	n/a	n/a	n/a	n/a	n/a
n/a	n/a	n/a	n/a	n/a	n/a	n/a	n/a	n/a	n/a	n/a	n/a
n/a	n/a	n/a	n/a	n/a	n/a	n/a	n/a	2.45E-03	1.07E-02	n/a	n/a
n/a	n/a	n/a	n/a	n/a	n/a	n/a	n/a	2.29E-04	1.00E-03	n/a	n/a
n/a	n/a	n/a	n/a	n/a	n/a	n/a	n/a	n/a	n/a	n/a	n/a
n/a	n/a	n/a	n/a	n/a	n/a	n/a	n/a	n/a	n/a	n/a	n/a
n/a	n/a	n/a	n/a	n/a	n/a	n/a	n/a	n/a	n/a	n/a	n/a
n/a	n/a	n/a	n/a	n/a	n/a	n/a	n/a	n/a	n/a	n/a	n/a
n/a	n/a	n/a	n/a	n/a	n/a	n/a	n/a	n/a	n/a	n/a	n/a
n/a	n/a	n/a	n/a	n/a	n/a	n/a	n/a	4.26E-02	1.87E-01	n/a	n/a
0.28	0.4667	0.16	0.27	273.2	448.8	0.033	0.054	0.022	0.036		
0.14	0.2334	0.08	0.13	136.6	224.4	0.016	0.027	0.011	0.018		
0.14	0.6223	0.08	0.36	136.6	598.4	0.016	0.072	0.011	0.048		
0.14	0.6223	0.08	0.36	136.6	598.4	0.016	0.072	0.011	0.048		
0.36	0.6482	0.20	0.37	341.5	623.3	0.041	0.075	0.027	0.050		
0.28	0.0867	0.16	0.05	273.2	83.3	0.033	0.010	0.022	0.007		
0.14	0.6223	0.08	0.36	136.6	598.4	0.016	0.072	0.011	0.048		
0.21	0.0503	0.12	0.54	204.9	897.5	0.025	0.108	0.016	0.072		
33.24	**10.64**	**4.23**	**2.40**	**4183.8**	**3283.0**	**1.73**	**0.70**	**1.56**	**0.76**	**-**	**-**

CRITERIA EMISSIONS - LIQUEFIED PETROLEUM GAS COMBUSTION - Nunhems USA, Inc.

Emission Factors

NOx	13.0	lb/10^3 gal	AP-42, Table 1.5-1, EMISSION FACTORS FOR LPG COMBUSTION[a], 1998
CO	7.5	lb/10^3 gal	AP-42, Table 1.5-1, EMISSION FACTORS FOR LPG COMBUSTION[a], 1998
CO_2e	12,500	lb/10^3 gal	AP-42, Table 1.5-1, EMISSION FACTORS FOR LPG COMBUSTION[a], 1998
PM-Total	0.7	lb/10^3 gal	AP-42, Table 1.5-1, EMISSION FACTORS FOR LPG COMBUSTION[a], 1998
SOx[b]	1.5	lb/10^3 gal	AP-42, Table 1.5-1, EMISSION FACTORS FOR LPG COMBUSTION[a], 1998
VOC[c]	1.0	lb/10^3 gal	AP-42, Table 1.5-1, EMISSION FACTORS FOR LPG COMBUSTION[a], 1998
Lead			

Conversion Factor
91.5 x 10^6 Btu/10^3 gal
1.09E-05

a Assumes PM, CO, and TOC emissions are the same, on a heat input basis, as for natural gas combustion. Use heat contents of 91.5 x 10^6 Btu/10^3 gallon for propane, 102 x 106 Btu/103 gallon for butane, 1020 x 106 Btu/106 scf for methane when calculating an equivalent heat input basis. For example, the equation for converting from methane's emissions factors to propane's emissions factors is as follows: lb pollutant/103 gallons of propane = (lb pollutant /106 ft3 methane) * (91.5 x 106 Btu/103 gallons of propane) / (1020 x 106 Btu/106 scf of methane). The NOx emission factors have been multiplied by a correction factor of 1.5, which is the approximate ratio of propane/butane NOx emissions to natural gas NOx emissions. To convert from lb/103 gal to kg/103 L, multiply by 0.12. SCC = Source Classification Code.

[b] The sulfur emission factor for propane is 0.10S, where S = sulfur fuel content in grains/100 ft^3, assumed to be 15 (per the Gas Processors Association Engineering Data Book, standard for commercial grade propane).

[c] VOC assumed to be equal to TOC.

#REF!

Description	Capacity (BTU/hr)/unit	Throughput (hours of operation/unit)	PM-Total*		PM-10 Emissions*		PM-2.5 Emissions*		NOx Emissions		CO Emissions		CO_2e Emissions		SOx Emissions		VOC** Emissions	
			lb/hr	T/yr	lb/hr	T/yr	lb/hr	T/yr	lb/hr	T/yr	lb/hr	T/yr	lb/hr	T/yr	lb/hr	T/yr	lb/hr	T/yr
Two propane building heaters ("Q") for temperature and humidity control (Heat 01)	1,000,000	3,285	0.0153	0.0251	0.0153	0.0251	0.0153	0.0251	0.2842	0.4667	0.1639	0.2693	273.2	448.8	0.0328	0.0539	0.0219	0.0359
Ten blower fans on south side of building "Q"	Ambient Air																	
Eight fans off east side of building "G" for temperature and humidity control.	Ambient Air																	
Twenty-Nine Total fans (Nine off of the east side of each of the "D" buildings) for temperature and humidity control.	Ambient Air																	
Four building heaters south of building "L" (Heat 02)	250,000	3,285	0.0077	0.0126	0.0077	0.0126	0.0077	0.0126	0.1421	0.2334	0.0820	0.1346	136.6	224.4	0.0164	0.0269	0.0109	0.0180
Seed Dryers within building "L." (Dryer 01A)	1,000,000	8,760	0.0077	0.0335	0.0077	0.0335	0.0077	0.0335	0.1421	0.6223	0.0820	0.3590	136.6	598.4	0.0164	0.0718	0.0109	0.0479
Seed Dryers within building "L." (Dryer 01B)	1,000,000	8,760	0.0077	0.0335	0.0077	0.0335	0.0077	0.0335	0.1421	0.6223	0.0820	0.3590	136.6	598.4	0.0164	0.0718	0.0109	0.0479
Seed Dryer northwest of building "L" (Dryer 3)	2,000,000	610	0.0153	0.0047	0.0153	0.0047	0.0153	0.0047	0.2842	0.0867	0.1639	0.0500	273.2	83.3	0.0328	0.0100	0.0219	0.0067
Dryer 4A (Vent through FARR03)	1,000,000	8,760	0.0077	0.0335	0.0077	0.0335	0.0077	0.0335	0.1421	0.6223	0.0820	0.3590	136.6	598.4	0.0164	0.0718	0.0109	0.0479
Dryer 4B (Vent through FARR04)	1,500,000	8,760	0.0115	0.0503	0.0115	0.0503	0.0115	0.0503	0.2131	0.9334	0.1230	0.5385	204.9	897.5	0.0246	0.1077	0.0164	0.0718
Seed Dryer northwest of building "K." (Dryer 2)	2,500,000	3,650	0.0191	0.0349	0.0191	0.0349	0.0191	0.0349	0.3552	0.6482	0.2049	0.3740	341.5	623.3	0.0410	0.0748	0.0273	0.0499
		TOTAL=	**0.0918**	**0.2281**	**0.0918**	**0.2281**	**0.0918**	**0.2281**	**1.7049**	**4.2353**	**0.9836**	**2.4434**	**1639.3**	**4072.4**	**0.1967**	**0.4887**	**0.1311**	**0.3258**

*PM Total Emission factor given in AP 42; assume that PM_{10} and $PM_{2.5}$ are the same as PM Total

**VOC assumed to be equal to TOC.

TOXIC AIR POLLUTANT EMISSION INVENTORY - NUNHEMS USA, INC. TAPs & HAPs Summary

NON-CARCINOGENS				
Pollutant	**Hourly Emissions**	**Screening Level**	**Modeling?**	**Emissions**
	(lb/hr)	**(lb/hr)**	**(Y/N)**	**(tons/yr)**
Acrolein*	6.19E-06	1.7E-02	N	3.72E-05
Ammonia	1.01E-03	1.2E+00	N	1.10E-03
Aluminum Oxide; Al2O3	3.96E-06	6.67E-01	N	1.7E-05
Calcium Carbonate	3.29E-03	6.67E-01	N	1.4E-02
Chlorpyrifos	2.44E-06	1.30E-02	N	1.1E-05
Ethylene Glycol*	2.24E-04	8.46E-01	N	9.8E-04
Hydrogen Chloride (HCL)	1.32E-05	5.00E-02	N	5.8E-05
Kaolin	3.93E-06	1.33E-01	N	1.7E-05
Magnesium Oxide	3.30E-06	6.67E-01	N	1.4E-05
Methanol*	4.26E-02	1.73E+01	N	1.9E-01
Mica	3.51E-04	2.00E-01	N	1.5E-03
Naphthalene*[a]	3.46E-05	3.33E+00	N	2.08E-04
Perlite	7.15E-04	6.67E-01	N	3.1E-03
Phosphine*	4.10E-03	2.70E-02	N	1.79E-02
Silica - amorphous- Diatomaceous Earth	1.59E-03	6.67E-01	N	7.0E-03
Silica, crystalline - Cristobalite	3.17E-04	3.30E-03	N	1.4E-03
Silica, crystalline - Quartz	5.51E-04	6.70E-03	N	2.4E-03
Sodium Hydroxide	1.10E-02	1.33E-01	N	4.8E-02
Thiram	1.41E-01	3.33E-01	N	6.2E-01
Toluene*	8.53E-05	2.5E+01	N	5.12E-04
Xylene*	2.50E-03	2.90E+01	N	1.1E-02
TOTAL	**2.09E-01**			**9.14E-01**

a Although listed as a noncarcinogen in the Rules, DEQ has determined that naphthalene is a possible/probable carcinogen. Compliance for naphthalene emissions should be based on the EL or AACC listed in Section 586 for PAH.

* Also listed Hazardous Air Pollutants. See HAPs Inventory list below.

CARCINOGENS				
Pollutant	**Hourly Emissions**	**Screening Level**	**Modeling?**	**Emissions**
	(lb/hr)	**(lb/hr)**	**(Y/N)**	**(tons/yr)**
Benzene*	3.10E-04	8.0E-04	N	1.36E-03
Formaldehyde*	3.30E-04	5.1E-04	N	4.44E-04
Naphthalene*[a]	3.46E-05	9.1E-05	N	2.08E-04
Thiourea	1.25E-06	1.5E-06	N	1.31E-09
Benzo(a)pyrene	9.50E-08	2.0E-06	N	4.16E-07
Benz(a)anthracene	3.09E-07	NA	N	1.35E-06
Benzo(b)fluoranthene	3.64E-07	NA	N	1.60E-06
Benzo(k)fluoranthene	8.03E-08	NA	N	3.52E-07
Chrysene	5.16E-07	NA	N	2.26E-06
Dibenzo(a,h)anthracene	1.49E-07	NA	N	6.53E-07
Indeno(1,2,3-cd)pyrene	1.58E-07	NA	N	6.90E-07
Total PAHs	7.91E-05	9.1E-05	N	3.46E-04
Total	**7.56E-04**			**2.36E-03**

* Also listed Hazardous Air Pollutants. See HAPs Inventory list below.

HAPs Inventory	
Pollutant	**Emissions**
	(tons/yr)
Acrolein	3.72E-05
Benzene	1.36E-03
Ethylene Glycol	9.83E-04
Formaldehyde	4.44E-04
Hexane	NA
Hydrochloric Acid	5.78E-05
Methanol	1.9E-01
Naphthalene	2.08E-04
Phosphine*	1.79E-02
Phosphorus	NA
Toluene	5.12E-04
Xylene	1.11E-02
Total	**2.19E-01**

*Maximum Individual HAP

TOXIC AND HAZARDOUS AIR POLLUTANT EMISSION INVENTORY - NUNHEMS USA, INC. SEED COATINGS

NON-CARCINOGENIC TAPs				
Pollutant	**Hourly Emissions**	**Screening Level**	**Modeling?**	**Emissions**
	(lb/hr)	**(lb/hr)**	**(Y/N)**	**(tons/yr)**
Aluminum Oxide; Al2O3	3.96E-06	6.67E-01	N	1.7E-05
Calcium Carbonate	3.29E-03	6.67E-01	N	1.4E-02
Chlorpyrifos	2.44E-06	1.30E-02	N	1.1E-05
Ethylene Glycol*	2.24E-04	6.67E-01	N	9.8E-04
Hydrogen Chloride (HCL)*	1.32E-05	5.00E-02	N	5.8E-05
Kaolin	3.93E-06	1.33E-01	N	1.7E-05
Magnesium Oxide	3.30E-06	6.67E-01	N	1.4E-05
Methanol*	4.26E-02	1.73E+01	N	1.9E-01
Mica	3.51E-04	2.00E-01	N	1.5E-03
Perlite	7.15E-04	6.67E-01	N	3.1E-03
Phosphine*	4.10E-03	2.70E-02	N	1.8E-02
Silica - amorphous- Diatomaceous Earth	1.59E-03	6.67E-01	N	7.0E-03
Silica, crystalline - Cristobalite	3.17E-04	3.30E-03	N	1.4E-03
Silica, crystalline - Quartz	5.51E-04	6.70E-03	N	2.4E-03
Sodium Hydroxide	1.10E-02	1.33E-01	N	4.8E-02
Thiram	1.41E-01	3.33E-01	N	6.2E-01
Xylene*	2.45E-03	2.90E+01	N	1.1E-02

* Also listed Hazardous Air Pollutants. See HAPs Inventory list below.

CARCINOGENIC TAPs				
Pollutant	**Max. Hourly Emissions**	**Screening Level**	**Modeling?**	**Emissions**
	(lb/hr)	**(lb/hr)**	**(Y/N)**	**(tons/yr)**
Thiourea	1.25E-06	1.5E-06	N	1.31E-09
Formaldehyde*	2.29E-04	5.1E-04	N	6.97E-09

* Also listed Hazardous Air Pollutants. See HAPs Inventory list below.

HAPs Inventory	
Pollutant	**Emissions**
	(tons/yr)
Ethylene Glycol	9.83E-04
Formaldehyde	7.0E-09
Hydrochloric Acid	5.78E-05
Methanol	1.9E-01
Phosphine	1.8E-02
Xylene	1.07E-02
Total	**1.88E-01**

TAP Emission Calculations of Process Byproduct - Nunhems USA, Inc. Seed Coatings		
Process	**Application**	**Name of Material/ TAPs**
Warehousing (Fumigation)	Pesticide	Weevil-cide, Fumitoxin / Phosphine (60%)
Warehousing (Fumigation)	Pesticide	Weevil-cide, Fumitoxin / Ammonia (20%)
Seed Enhancement (Treatment)	Fungicide	42S Thiram / Thiram (42%)
Seed Enhancement (Pelleting)	Fungicide	42S Thiram / Thiram (42%)
Seed Enhancement (Treatment)	Fungicide	Maxim 4FS / Ethylene Glycol (<15%)
Seed Enhancement (Pelleting)	Fungicide	Maxim 4FS / Ethylene Glycol (<15%)
Seed Enhancement (Pelleting)	Fungicide	ProGro / Thiram (50%)
Seed Enhancement (Treatment)	Insecticide	Lorsban 30F / Chlorpyrifos (30%)
Seed Enhancement (Treatment)	Insecticide	Lorsban 30F / Xylene (3%)
Seed Enhancement (Pelleting)	Insecticide	TriGard OMC / Kaolin Clay (<15%),
Seed Enhancement (Pelleting)	Insecticide	TriGard OMC / Amorphous Silica; diatomaceous earth (<15%)
Seed Enhancement (Pelleting)	Powder	C31 / Calcium carbonate (50-100%)
Seed Enhancement (Pelleting)	Powder	C31 / Diatomaceous earth/silica-amorphous (25-50%)
Seed Enhancement (Pelleting)	Powder	C31 / Mica (1-10%)
Seed Enhancement (Pelleting)	Powder	C31 / Silica, crystalline - Quartz (1-10%)
Seed Enhancement (Pelleting)	Powder	C31 / Silica, crystalline - Cristobalite (1-10%)
Seed Enhancement (Pelleting)	Powder	F18 / Mica (50-100%)
Seed Enhancement (Pelleting)	Powder	Mikrosohl 40 / Calcium Carbonate (88%)
Seed Enhancement (Pelleting)	Powder	Mikrosohl 40 / Hydrochloric acid-insoluble components (10%)
Seed Enhancement (Pelleting)	Powder	Wimer 100,130,140 / Silica, crystalline - Quartz (53%)
Seed Enhancement (Pelleting)	Powder	Navajo Brand Grade FFF Pumice / Aluminum Oxide: Al2O3 (12%)
Seed Enhancement (Pelleting)	Powder	Navajo Brand Grade FFF Pumice / Calcium Oxide: CaO (<1%)
Seed Enhancement (Pelleting)	Powder	Navajo Brand Grade FFF Pumice / Magnesium Oxide: MgO (<1%)
Seed Enhancement (Pelleting)	Powder	Dicalite 476, 478 Perlite Filter Aids / Perlite (assume 100%)
Seed Enhancement (Pelleting)	Polymer/Binder	SOL 17 / Methanol (<1%)
Seed Enhancement (Treatment)	Polymer/Binder	Sepiret 9256 EKWX / Formaldehyde (~39ppm or 0.0039%)
Seed Enhancement (Priming)	Disinfection	Liquichlor/Sodium Hypochlorite / Sodium hydroxide (0.1-2%)
Seed Enhancement (Priming)	Priming Component	Thiourea / Thiourea (>99%)

[a]Estimated seed coating transfer efficiency provided by Nunhems USA, Inc.
[b]Collection efficiency only for powder coatings; potential vapors from liquid coatings are not controlled by the baghouse.

TAP Emission Calculations of Process Byproduct - Nunhems USA, Inc. Seed Coatings						
Max Material Process Rate (lb/hr)	Transfer Efficiency (%)[a]	Wt. Fraction TAP	Filtration Unit Collection Efficiency (%)[b]	TAP Emissions (lb/hr)	TAP Emissions (ton/yr)	
				4.10E-03	4.47E-03	91 fumes/yr
				1.01E-03	1.10E-03	91 fumes/yr
4.000000	95%	0.42	0.00%	8.40E-02	3.68E-01	
0.350000	95%	0.42	0.00%	7.35E-03	3.22E-02	
0.025000	95%	0.15	0.00%	1.88E-04	8.21E-04	
0.004930	95%	0.15	0.00%	3.70E-05	1.62E-04	2.24E-04
1.980000	95%	0.50	0.00%	4.95E-02	2.17E-01	1.41E-01
1.630000	95%	0.30	99.99%	2.44E-06	1.07E-05	
1.630000	95%	0.03	0.00%	2.45E-03	1.07E-02	
5.240000	95%	0.15	99.99%	3.93E-06	1.72E-05	
5.240000	95%	0.15	99.99%	3.93E-06	1.72E-05	
635.000000	95%	1.00	99.99%	3.17E-03	1.39E-02	
635.000000	95%	0.50	99.99%	1.59E-03	6.95E-03	1.59E-03
635.000000	95%	0.10	99.99%	3.17E-04	1.39E-03	
635.000000	95%	0.10	99.99%	3.17E-04	1.39E-03	
635.000000	95%	0.10	99.99%	3.17E-04	1.39E-03	
6.610000	95%	1.00	99.99%	3.30E-05	1.45E-04	3.51E-04
26.400000	95%	0.88	99.99%	1.16E-04	5.09E-04	3.29E-03
26.400000	95%	0.10	99.99%	1.32E-05	5.78E-05	
88.000000	95%	0.53	99.99%	2.33E-04	1.02E-03	5.51E-04
6.600000	95%	0.12	99.99%	3.96E-06	1.73E-05	
6.600000	95%	0.01	99.99%	3.30E-07	1.45E-06	
6.600000	95%	0.01	99.90%	3.30E-06	1.45E-05	
14.300000	95%	1.00	99.90%	7.15E-04	3.13E-03	
85.200000	95%	0.01	0.00%	4.26E-02	1.87E-01	
117.500000	95%	0.000039	0.00%	2.29E-04	1.00E-03	
10.978682	95%	0.02	0.00%	1.10E-02	4.81E-02	
0.000025	95%	0.99	0.00%	1.25E-06	5.46E-06	

Processed Material Parameters - Nunhems USA, Inc. Seed Coatings

Application	*Product Name;* Constituent(s) of Concern in % by weight	Manufacturer	MSDS Sheet Date	TAPs?	HAPs?	Max Application Rate (lb/hr or as indicated)	**Source/**Calculations
Pesticide	*Weevil-cide or Fumitoxin* ; 55% Aluminum Phosphide (**PH3, phosphine** gas)	Pestcon Systems, Inc.	2004	Yes (585)	Yes	0.0041	**Nunhems USA, Inc. Seed Enhancement Manager** 1 pill = 0.634 grams; 200 pills/fume; MAX 91 fumes/year (3 days fume + 1 day of ventilation = 4 days; Emissions assumed to primarily occur on the 4th day of fumigation when doors are opened. 200 pills used per fumigation event; MSDS lists almuminum phosphide as 60% by weight. The following reaction takes place: AlP + 3H2O -> Al(OH)3 + PH3 where 1 pill yields 0.223 g PH3. At 200 pills per fume for 24 hours and 91 days per year. (0.223 g PH3) x (200 pills per fume) x (1 fume/24 hours) x (1 lb/ 453.59 g)
	Weevil-cide or Fumitoxin ; 55% Aluminum Phosphide (**NH3, ammonia** gas)	Pestcon Systems, Inc.	2004	Yes (585)	No	0.0010	**Nunhems USA, Inc. Seed Enhancement Manager** 1 pill = 0.634 grams; 200 pills/fume; MAX 91 fumes/year (3 days fume + 1 day of ventilation = 4 days; Emissions assumed to primarily occur on the 4th day of fumigation when doors are opened. 200 pills used per fumigation event; MSDS lists ammonium carbamate as 20% by weight. The following reaction takes place: NH2COONH4 -> 2NH3 + CO2 where 1 pill yields 0.055 g NH3. At 200 pills per fume for 24 hours and 91 days per year. (0.055 g NH3) x (200 pills per fume) x (1 fume/24 hours) x (1 lb/ 453.59 g)
Fungicide	*42S Thiram;* **Thiram (42%)**	Bayer CropScience	2007	Yes (585)	No	4 lbs. T 0.35 lbs. P	**Nunhems USA, Inc. Seed Enhancement Manager** TRT: 5.95 g / Kg x 305 Kg / hr = 1815 g / hr = 4 lbs / hr PLT: 4.46 g / kg x 18 kg x 6 batches = 482 g / 3 hrs = 160g / hr
	Rovral 4F; Iprdione (41.6%)	Bayer CropScience	2007	No	No		
	Apron XL LS; Mefenoxam (33.3%)	Syngenta Crop Protection, Inc.	2010	No	No		
	Maxim 4FS ; Fludioxonil (40.3%), **Ethylene Glycol (<15%)**	Syngenta Crop Protection, Inc.	2010	Yes (585); check for "vapor" form	Yes	0.025 lbs. T 0.00493 lbs. P	**Nunhems USA, Inc. Seed Enhancement Manager** TRT: 0.0621 g / Kg x 180 kg / hr = 11.2 g / hr PLT: 0.0621 g / kg x 18 kg / batch x 6 batches = 6.71 g/ 3 hr = 2.24 g / hr
	Allegiance FL; Metalaxyl (28.35%), Attapulgite Clay (0.40%)	Bayer CropScience	2006	No	No		
	Dynasty; Azoxystrobin (9.6%), Propylene glycol (?%)	Syngenta Crop Protection, Inc.	2010	No	No		
	ProGro; Carboxin (30%), **Thiram (50%)**	Chemtura	2009	Yes (585)	No	1.98 lbs / hr T	**Nunhems USA, Inc. Seed Enhancement Manager** 25 g / kg x 18 kg / batch x 6 batches = 2700 g / 3 hr = 900 g / hr, 454 g / lb.
Insecticide	*Lorsban 30F;* **Chlorpyrifos (30%)**, 1,2,4-Trimethylbenzene (4.10 %), **Xylene (3%)**, Ethylbenzene (0.60%)	Bayer CropScience	2006	Yes (Chlorpyrifos, Xylene-585)	Yes (Xylene)	1.63 lbs. T	**Nunhems USA, Inc. Seed Enhancement Manager** TRT: 1.94 g / kg x 380 kg / hr = 737 g / hr
	Cruiser 5FS; Thiamethoxam (47.6%)	Syngenta Crop Protection, Inc.	2011	No	No		
	Sepresto 75 Ws; Clothianidin (56.25%), Imidacloprid (18.75%)	Bayer CropScience	2007	No	No		
Powder	*C31;* **Calcium carbonate** (50-100%), **Diatomaceous earth**/silica-amorphous (25-50%), **Mica** (1-10%), **Quartz**/SiO2 (1-10%), **Cristobalite** (1-10%).	Incotec	2010	Yes (Diat. Earth, calcium carbonate, mica (dust), quartz, Cristobalite-585)	No	635 lbs / hr P	**Nunhems USA, Inc. Seed Enhancement Manager** 6 batches x 18 kg x 8:1 build-up = 864 Kgs / 3 hr / batch = 288 Kg / hr
	F18; **Mica** (50-100%)	Incotec	2011	Yes (585)	No	6.61 lbs P	**Nunhems USA, Inc. Seed Enhancement Manager** 6 batches x 1.5 kg / batch = 6 Kgs / 3 hr / batch = 3 Kg / hr
	Mikrosohl 40; **Calcium Carbonate** (88%), Magnesium Carbonate (1%), Fe2O3: Iron (III) Oxide (5%), **Hydrochloric acid**-insoluble components (10%)	Dammann	2006	Yes (Calcium carbonate-585)	Yes (Hydrochloric acid)	26.4 lbs. P	**Nunhems USA, Inc. Seed Enhancement Manager** 12 kg / hr
	Wimer 100,130,140; Aluminum silicate (?%), **Silica, crystalline/quartz** (53%)	Ankerpoort NV	2004	Yes (Silica, quartz-585)	No	88 lbs. P	**Nunhems USA, Inc. Seed Enhancement Manager** 100 Kg (blend) / 2 hrs x 80% = 40 Kg / hr = 88.1 lbs / hr

	Ligamed MF-2-K Magnesium Sterate; Sulphate (0-5%), Stearic acid (60-70%), Magnesium (2-8%)	Peter Greven Oleochemicals	2009	No	No		
	Navajo Brand Grade FFF Pumice; Silicon dioxide: SiO2 (75%), **Aluminum Oxide: Al2O3** (12%), Potassium Oxide: K2O (4%), Sodium Oxide: Na2O (4%), Fe2O3: Iron (III) Oxide (<2%), **Calcium Oxide: CaO**, **Magnesium Oxide: MgO** and Titanium Dioxide: TiO2 (<1%)	CR Minerals Company, LLC	2009	Yes (Al2O3, CaO, MgO (fume)-585)	No	6.6 lbs. P	**Nunhems USA, Inc. Seed Enhancement Manager** 100 Kg (blend) / 2 hrs x 6% = 3 Kg / hr = 6.6 lbs / hr
	Dicalite 476, 478 Perlite Filter Aids; **Perlite**: Amorphous Silicate (?%)	Dicalite Europe	2009	Yes (perlite-585)	No	14.3 lbs. P	**Nunhems USA, Inc. Seed Enhancement Manager** 100 Kg (blend) / 2 hrs x 13% = 6.5 Kg / hr = 14.3 lbs / hr
Polymer/Binder	*SOL 17: Solution 17;* **Methanol** (<1%)	Incotec	2011	Yes(585)	Yes	85.2 lbs/hr P	**Nunhems USA, Inc. Seed Enhancement Manager** 250 gallons used / 3 days SOL017 has a density of 1.02 g/cm3 or 8.512 lb/gal x 10 gal/hr = 85.2 lb/hr
	SP1090; Vinyl Acetate Polymer (39-41%), Hydrolyzed Polyvinyl Alcohol (>1%), Biocide: Kathlon LX (1.5%)	Industrial Adhesives of Indiana	?	No	No	1.0 gallons (PLT)	
	Sepiret 9256 EKWX; Filler pigments: Proprietary (5-20%), Filler pigments: Proprietary (5-20%), **Formaldehyde** (~39ppm or 0.0039%)	Becker Underwood, Inc.	2009	Yes (586)	Yes	117.5 lbs. T	
	Sepiret PF 10 Orange Powder; Filler pigments: Proprietary (10% max)	Becker Underwood, Inc.	2003	No	No		
	Certop CT28008; unknown	Bayer CropScience	2008	No	No	117.7 lbs. (TRT)	
	Basiscoat Suspension; Aqeuous suspension with Mica, ChinaClay, Titane-Dioxide, Arylamid-Pigment and Polymer	SUET	2008	No	No	46.9 lbs. (TRT)	
Disinfection-Priming Components	*Liquichlor/Sodium Hypochlorite;* Sodium hypochlorite (9-16%), **Sodium hydroxide** (0.1-2%)	Univar USA, Inc.	2007	Yes (585)	No	10.978682 lbs./hr of 12.5% D	**Nunhems USA, Inc. Seed Enhancement Manager** Specific gravity of Liquichlor = 1.196 (1.196)x(8.345 lbs/gal of H2O)x(1.1 gal/hr)= 10.978682 lb/hr
	Trisodium Phosphate Anhydrous; Trisodium Phosphate Anhydrous (100%)	Univar USA, Inc.	2003	No	No		
	Polyglykol 6000S; Polyethylene glycol (<=100%)	Clariant Corporation	2009	No	No	2035 lbs. / week (PR)	
Priming Component (Lettuce)	*Ethrel Brand Ethephon Plant Regulator;* Ethaphon (21.7%)	Bayer CropScience	2005	No	No		
	Thiourea; **Thiourea** (>99%)	Fisher Scientific	2009	Yes (586)	No	2.51666E-05	**Nunhems USA, Inc. Seed Enhancement Manager** SG=1.405 (1.405)x(8.345 lbs/gal water)x(amount of gallons used) Nunhems uses 5-10 grams of Thiourea per year. (10 grams/year)x(0.00220462262 lbs/gram) = (0.22046 lb/year) or 2.516666E-5 lbs/hr
	Potassium Hydroxide; **Potassium Hydroxide** (100%)	EMD Chemicals, Inc. (customer service - 800-645-5476)	2007	Yes (585)	No	NA	**Nunhems USA, Inc. Seed Enhancement Manager** Potassium Hydroxide is Neutralized with HCL to pH of 7 prior to seed contact/introduction, therefore there are no emissions of the chemical to the atmosphere.
	Kinetine; Kinetine (90-100%)	MP Biomedicals, LLC	2006	No	No		

T: Maximum amount applied during treatment process

P: Maximum amount applied during pelleting process

D: Maximum amount applied during disinfection process

PRODUCT PARTICULATE EMISSIONS - Nunhems USA, Inc.

Description	Max Amount of Material Received or Otherwise Processed (Kgs/Yr)	Maximum Material Process Rate (lb/hr)	Emission Factor	Grain Loading (Upstream), gr/dscf/min	Grain Loading (Downstream), gr/dscf/min	Volumetric Flow Rate CFM	Filtration Unit Control Efficiency (%)	PTE: Uncontrolled Emissions PM-Total* (lb/hr)	PTE: Uncontrolled Emissions PM-Total* (T/yr)
DC-1 CSL Dust Collector; Seed Conditioning, Lines 3-4[a]	2,000,000.00	503.34		0.0700	0.0007	34,900.00	99.99	20.9400	91.7172
DC-2 CSL Dust Collector; Seed Conditioning, AIM Blending Line and Lines 5-6[a]	2,000,000.00	503.34		0.0700	0.0007	34,900.00	99.99	20.9400	91.7172
DC-3 CSL Dust Collector; Seed Conditioning, Line 1-2[a]	2,000,000.00	503.34		0.0700	0.0007	35,000.00	99.99	21.0000	91.9800
DC-4 CSL Dust Collector; Seed Conditioning, Carrot Seed Brushing Lines 1-3[a]	2,000,000.00	503.34		0.0700	0.0007	12,800.00	99.99	7.6800	33.6384
DC-5 CSL Dust Collector; Seed Conditioning, Scalping Lines 3-4 [a]	2,000,000.00	503.34		0.0700	0.0007	20,000.00	99.99	12.0000	52.5600
DC-6 CSL Dust Collector; Seed Conditioning, Scalping Lines 1-2 [a]	2,000,000.00	503.34		0.0700	0.0007	32,500.00	99.99	19.5000	85.4100
DC-7 CSL Dust Collector; Seed Conditioning, Scalping and Brush Lines Makeup[a]	2,000,000.00	503.34		0.0700	0.0007	6,800.00	99.99	4.0800	17.8704
DC-8 CSL Dust Collector; Seed Packaging and Shipping[b]	450,000.00	113.25		0.0700	0.0007	25,000.00	99.99	15.0000	65.7000
(FARR 1) FARR Cartridge Collector No. 1; Seed Treatment (Film Coating)[b]	450,000.00	113.25		0.2000	0.0020	5,831.00	99.99	9.9960	43.7825
(FARR 2) FARR Cartridge Collector No. 2; Seed Treatment (Film Coating)[b]	450,000.00	113.25		0.2000	0.0020	5,478.00	99.99	9.3909	41.1320
(FARR 3) FARR Cartridge Collector No. 3; Seed Enhancement (Pelleting)[b]	450,000.00	113.25		0.2000	0.0020	6,538.00	99.99	11.2080	49.0910
(FARR 4) FARR Cartridge Collector No. 4; Seed Enhancement (Pelleting)[b]	450,000.00	113.25		0.2000	0.0020	7,828.00	99.99	13.4194	58.7771
(FARR 5) FARR Cartridge Collector No. 5; Warehousing (Bulk Unloading)[a]	2,000,000.00	503.34		0.2000	0.0020	10,627.00	99.99	18.2177	79.7936
(FARR 6) FARR Cartridge Collector No. 6; Warehousing (Bulk Unloading)[a]	2,000,000.00	503.34		0.2000	0.0020	10,627.00	99.99	18.2177	79.7936
(MR BH 1) Murphy-Rodgers Baghouse; Seed Enhancement (Priming)[b]	450,000.00	113.25				3,900.00	99.99	-	-
(HERD 1) Herding Filtration Unit No. 1; Seed Enhancement (Powder/Blending)[b]	450,000.00	113.25		0.0133	0.0004	5,910.00	99.97	0.6754	2.9584
(HERD 2) Herding Filtration Unit No. 2; Seed Enhancement (Pelleting)[b]	450,000.00	113.25		0.0133	0.0004	68,722.00	99.97	7.8539	34.4003
							TOTAL PTE (Uncontrolled)=	210.1191	920.3216

*PM-10 emissions assume 49% of PM is PM-10; PM-2.5 emissions assume 13.8% of PM is PM-2.5 (AP-42, Appendix B.1-9.9.1)

[a] Accounts for total amount of material received, averaged over a 3 year period and increased by greater than 20%, to account for potential growth.

[b] Accounts for total amount of product that is conditioned, averaged over three years and increased by greater than 20%, to account for potential growth. Assumes that the amount of product "conditioned" is the same as the amount of product "enhanced, treated, and/or shipped."

PRODUCT PARTICULATE EMISSIONS - Nunhems USA, Inc.

	PTE: Controlled Emissions					
Control Factor Reference	PM-Total (lb/hr)	PM-Total (T/yr)	PM-10* (lb/hr)	PM-10* (T/yr)	PM-2.5* (lb/hr)	PM-2.5* (T/yr)
Manf. Guarantee - CSL, 01/19/2012 email	0.2094	0.9172	0.1026	0.45	0.0289	0.127
Manf. Guarantee - CSL, 01/19/2012 email	0.2094	0.9172	0.1026	0.45	0.0289	0.127
Manf. Guarantee - CSL, 01/19/2012 email	0.2100	0.9198	0.1029	0.45	0.0290	0.127
Manf. Guarantee - CSL, 01/19/2012 email	0.0768	0.3364	0.0376	0.16	0.0106	0.046
Manf. Guarantee - CSL, 01/19/2012 email	0.1200	0.5256	0.0588	0.26	0.0166	0.073
Manf. Guarantee - CSL, 01/19/2012 email	0.1950	0.8541	0.0956	0.42	0.0269	0.118
Manf. Guarantee - CSL, 01/19/2012 email	0.0408	0.1787	0.0200	0.09	0.0056	0.025
Manf. Guarantee - CSL, 01/19/2012 email	0.1500	0.6570	0.0735	0.32	0.0207	0.091
Manf. Guarantee - FARR, 01/20/2012 email; flowrate info provided by Nunhems USA, via direct measurement, on 04-16-2012.	0.1000	0.4378	0.0490	0.21	0.0138	0.060
Manf. Guarantee - FARR, 01/20/2012 email; flowrate info provided by Nunhems USA, via direct measurement, on 04-16-2012.	0.0939	0.4113	0.0460	0.20	0.0130	0.057
Manf. Guarantee - FARR, 01/20/2012 email; flowrate info provided by Nunhems USA, via direct measurement, on 04-16-2012.	0.1121	0.4909	0.0549	0.24	0.0155	0.0677
Manf. Guarantee - FARR, 01/20/2012 email; flowrate info provided by Nunhems USA, via direct measurement, on 04-16-2012.	0.1342	0.5878	0.0658	0.29	0.0185	0.0811
Manf. Guarantee - FARR, 01/20/2012 email; flowrate info provided by Nunhems USA, via direct measurement, on 04-16-2012.	0.1822	0.7979	0.0893	0.39	0.0251	0.11
Manf. Guarantee - FARR, 01/20/2012 email; flowrate info provided by Nunhems USA, via direct measurement, on 04-16-2012.	0.1822	0.7979	0.0893	0.39	0.0251	0.11
Manf. Guarantee - N.R.Murphy, Ltd, 01/20/2012 email	0.0113	0.0496	0.0055	0.0243	0.0016	0.0068
Manf. Guarantee - Herding Filtration, Ltd, 01/26/2012 email; flowrate info provided by Nunhems USA, Inc. via direct measurement on 04-16-2012.	0.0203	0.0888	0.0099	0.04	0.0028	0.0122
Manf. Guarantee - Herding Filtration, Ltd, 01/26/2012 email; flowrate info provided by Nunhems USA, Inc. via direct measurement on 04-16-2012.	0.2356	1.0320	0.1155	0.51	0.0325	0.142
TOTAL PTE (Controlled)=	**2.2831**	**10.0000**	**1.1187**	**4.9000**	**0.3151**	**1.3800**

GENERATORS - NON-CARCINOGENIC TAPs							
DIESEL FUEL							
Pollutant	EF for >600 hp units[a]	EF for < 600 hp units[b]	Combined Emissions	Combined Emissions	Average lbs/hr	Screening Level	Modeling?
	(lb/MMBtu)	(lb/MMBtu)	(lb/hr)	(tons/yr)	24 hr Avg for 585s	(lb/hr)	(Y/N)
Acrolein	7.88E-06	9.25E-05	1.49E-04	3.72E-05	6.19E-06	1.7E-02	N
Barium	0	0	0	0	0	3.3E-02	N
Chromium	0	0	0	0	0	3.3E-02	N
Cobalt	0	0	0	0	0	3.3E-03	N
Copper	0	0	0	0	0	6.7E-02	N
Hexane	0	0	0	0	0	1.2E+01	N
Manganese	0	0	0	0	0	3.33E-01	N
Moybdenum	0	0	0	0	0	6.67E-01	N
Naphthalene[a]	1.30E-04	8.48E-05	8.30E-04	2.08E-04	3.46E-05	3.33E+00	N
Pentane	0	0	0	0	0	1.18E+02	N
Selenium	0	0	0	0	0	1.3E-02	N
Toluene	2.81E-04	4.09E-04	2.05E-03	5.12E-04	8.53E-05	2.5E+01	N
o-Xylene	1.93E-04	2.85E-04	1.41E-03	3.53E-04	5.88E-05	2.9E+01	N
Vanadium	0	0	0	0	0	3.0E-03	N
Zinc	0	0	0	0	0	6.7E-01	N

[a] Although listed as a noncarcinogen in the Rules, DEQ has determined that naphthalene is a possible/probable carcinogen. Compliance for naphthalene emissions should be based on the EL or AACC listed in Section 586 for PAH.

GENERATORS - CARCINOGENIC TAPs							
DIESEL FUEL							
Pollutant	EF for >600 hp units[a]	EF for < 600 hp units[b]	Emissions	Emissions	Average lbs/hr	Screening Level	Modeling?
	(lb/MMBtu)		(lb/hr)	(tons/yr)	Annual Avg for 586s	(lb/hr)	(Y/N)
Aceteldehyde	2.52E-05	7.67E-04	1.01E-03	2.51E-04	5.74E-05	3.00E-03	N
Arsenic	0	0	0	0	0	1.5E-06	N
Benzene	7.76.E-04	9.33.E-04	5.44E-03	1.36E-03	3.10E-04	8.0E-04	N
Beryllium	0	0	0	0	0	2.8E-05	N
1,3-Butadiene	0	3.91E-05	4.40E-05	1.10E-05	2.51E-06	2.4E-05	N
Cadmium	0	0	0	0	0	3.7E-06	N
Formaldehyde	7.89E-05	1.18E-03	1.77E-03	4.44E-04	1.01E-04	5.1E-04	N
Nickel	0	0	0	0	0	2.7E-05	N
Naphthalene[a]	1.30E-04	8.48E-05	8.30E-04	2.08E-04	3.46E-05	NA	N
Acenaphthylene	9.23E-06	5.60E-06	5.85E-05	1.46E-05	3.34E-06	NA	NA
Acenaphthene	4.68E-06	1.42E-06	2.80E-05	7.01E-06	1.60E-06	NA	NA
Fluorene	1.28E-05	2.92E-05	1.05E-04	2.63E-05	6.00E-06	NA	NA
Phenanthrene	4.08E-05	2.94E-05	2.64E-04	6.59E-05	1.50E-05	NA	NA
Anthracene	1.23E-06	1.87E-06	9.06E-06	2.26E-06	5.17E-07	NA	NA
Fluoranthene	4.03E-06	7.61E-06	3.13E-05	7.83E-06	1.79E-06	NA	NA
Pyrene	3.71E-06	4.78E-06	2.63E-05	6.59E-06	1.50E-06	NA	NA
Benzo(a)pyrene	2.57E-07	1.88E-07	1.66E-06	4.16E-07	9.50E-08	2.0E-06	N
Benz(a)anthracene	6.22E-07	1.68E-06	5.41E-06	1.35E-06	3.09E-07	NA	NA
Benzo(b)fluoranthene	1.11E-06	9.91E-08	6.38E-06	1.60E-06	3.64E-07	NA	NA
Benzo(k)fluoranthene	2.18E-07	1.55E-07	1.41E-06	3.52E-07	8.03E-08	NA	NA
Benzo(g,h,l)perylene	5.56E-07	4.89E-07	3.69E-06	9.23E-07	2.11E-07	NA	NA
Chrysene	1.53E-06	3.53E-07	9.04E-06	2.26E-06	5.16E-07	NA	NA
Dibenzo(a,h)anthracene	3.46E-07	5.83E-07	2.61E-06	6.53E-07	1.49E-07	NA	NA
Indeno(1,2,3-cd)pyrene	4.14E-07	3.75E-07	2.76E-06	6.90E-07	1.58E-07	NA	NA
Total PAHs	2.12E-04	1.69E-04	1.39E-03	3.46E-04	7.91E-05	9.1E-05	N

[a]AP-42, Table 3.4-3
[b]AP-42, Table 3.3-2

Notes: * Emission factor units in pounds per MMBTU.
Emission estimates represent maximum emissions based on burning diesel fuel and based on AP-42 Tables 3.4-3 and 3.4-4.
Emissions based on 100 hours/year of operation.

CRITERIA EMISSIONS - DIESEL COMBUSTION - Nunhems USA, Inc.

Emission Factors: Stationary Internal Combustion Sources (AP-42, Chapter 3)[1]

Small Engines (<600 hp): From Table 3.3-1						Large Engines (>600 hp): From Table 3.4-1					
		(power output)		(fuel input)	Reference			(power output)		(fuel input)	Reference
NOx	3.10E-02	lb/hp-hr	4.41E+00	lb/MMBtu	AP-42, Table 3.3-1, 1997	NOx	2.40E-02	lb/hp-hr	3.20E+00	lb/MMBtu	AP-42, Table 3.4-1, 1996
CO	6.68E-03	lb/hp-hr	9.50E-01	lb/MMBtu	AP-42, Table 3.3-1, 1997	CO	5.50E-03	lb/hp-hr	8.50E-01	lb/MMBtu	AP-42, Table 3.4-1, 1997
CO_2e	1.15E+00	lb/hp-hr	1.64E+02	lb/MMBtu	AP-42, Table 3.3-1, 1997	CO2e	1.16E+00	lb/hp-hr	1.65E+02	lb/MMBtu	AP-42, Table 3.4-1, 1998
PM-10[2]	2.20E-03	lb/hp-hr	3.10E-01	lb/MMBtu	AP-42, Table 3.3-1, 1998	PM Total	7.00E-04	lb/hp-hr	1.00E-01	lb/MMBtu	AP-42, Table 3.4-1, 1998
						PM10		lb/hp-hr	5.73E-02	lb/MMBtu	AP-42, Table 3.4-2, 1996
SOx	2.05E-03	lb/hp-hr	2.90E-01	lb/MMBtu	AP-42, Table 3.3-1, 1999	SOx	1.21E-05	lb/hp-hr	1.52E-03	lb/MMBtu	AP-42, Table 3.4-1, 1999
VOC	2.47E-03	lb/hp-hr	3.50E-01	lb/MMBtu	AP-42, Table 3.3-1, 2001	VOC	7.05E-04	lb/hp-hr	9.00E-02	lb/MMBtu	AP-42, Table 3.4-1, 2001
Lead	0.00E+00	lb/hp-hr	0.00E+00	lb/MMBtu	AP-42, Table 3.3-1, 2002	Lead	0.00E+00	lb/hp-hr	0.00E+00	lb/MMBtu	AP-42, Table 3.4-1, 2002

[1] Manufacturers' specific emission factors were used when available. Otherwise, the appropriate AP-42 emission factors were utilized.
[2] PM-10 = particulate matter less than or equal to 10 um aerodynamic diameter. All particulate is assumed to be < or = 1 um in size.

Emission Factors: Manufacturers' Specific Information[1]

CAT C9-2008 3 Phase Diesel Generator						Generac 2000 Series 3-Phase Diesel Generator					Stamford Cummins 3-Phase Diesel Generator				
See "CAT GEN Mfg Spec.pdf" for specific manufacturing data.						See "GEN GEN Emisson Factors.pdf" for specific manufacturing data.					See "Cummins generator manuf emiss specs.pdf" for specific manufacturing data.				
NOx	2.97	g/hp-hr	6.55E-03	lb/hp-hr		NOx	6.74	g/hp-hr	1.49E-02	lb/hp-hr	NOx	5.7	g/hp-hr	1.26E-02	lb/hp-hr
CO	0.36	g/hp-hr	7.94E-04	lb/hp-hr		CO	1.9	g/hp-hr	4.19E-03	lb/hp-hr	CO	0.57	g/hp-hr	1.26E-03	lb/hp-hr
HC	0.1	g/hp-hr	2.20E-04	lb/hp-hr		PM	0.98	g/hp-hr	2.16E-03	lb/hp-hr	HC	0.08	g/hp-hr	1.76E-04	lb/hp-hr
PM	0.079	g/hp-hr	1.74E-04	lb/hp-hr		THC	0.23	g/hp-hr	5.07E-04	lb/hp-hr	PM	0.03	g/hp-hr	6.61E-05	lb/hp-hr
											SO_2	0.11	g/hp-hr	2.43E-04	lb/hp-hr

[1] Manufacturers' specific emission factors were used when available. Otherwise, the appropriate AP-42 emission factors were utilized.

Calculated Emissions

Description	kW[a]	MMBtu/hr	hp[b]	Hours of Operation / Year	NOx Emissions (lb/hr)	NOx Emissions (T/yr)	CO Emissions (lb/hr)	CO Emissions (T/yr)	CO2e Emissions (lb/hr)	CO2e Emissions (T/yr)	PM-Total Emissions* (lb/hr)	PM-Total Emissions* (T/yr)	PM-10 Emissions* (lb/hr)	PM-10 Emissions* (T/yr)	PM-2.5 Emissions* (lb/hr)	PM-2.5 Emissions* (T/yr)	SOx Emissions (lb/hr)	SOx Emissions (T/yr)	VOC Emissions** (lb/hr)	VOC Emissions** (T/yr)	Lead Emissions (lb/hr)	Lead Emissions (T/yr)
CAT C9-2008 3 Phase Diesel Generator (at pumphouse)	250	0.85	398	500	2.61	0.65	0.32	0.08	458	114	0.069	0.017	0.069	0.017	0.0693	0.017	0.82	0.20	0.98	0.25	0	0
Generac 2000 Series 3-Phase Diesel Generator (South of Building "C")	80	0.27	125	500	1.86	0.46	0.52	0.13	144	36	0.270	0.068	0.270	0.068	0.27	0.068	0.26	0.06	0.06	0.02	0	0
		1.13																				
Stamford Cummins 3-Phase Diesel Generator[c]	1656	5.65	2205	500	27.71	6.93	2.77	0.69	2558	639	0.146	0.036	0.146	0.036	0.15	0.036	0.53	0.13	0.39	0.10	0	0
		5.65			**32.17**	**8.04**	**3.61**	**0.90**	**3159**	**790**	**0.49**	**0.12**	**0.49**	**0.12**	**0.49**	**0.12**	**1.61**	**0.40**	**1.435**	**0.36**	**0.0**	**0.0**

[a] 1 kW = 0.003412 MMBtu/hr;
[b] Brake hp ratings provided for all generators; based upon manufacturer's specification information provided in Form EU1 for each unit.
[c] >600 hp; uses AP 42, Table 3.4-1 emissions factors
*PM-10 = particulate matter less than or equal to 10 um aerodynamic diameter. All particulate is assumed to be < or = 1 um in size.
** VOC assumed to be equal to TOC.

Appendix L
Nunhems
Process Weight Calculations

Compliance with IDAPA Rule 701 PM Standard for Process Weight

Unit	DC1	DC2	DC3	DC4	DC5	DC6	DC7	DC8	FARR 1	FARR 2	FARR 3	FARR 4	FARR 5	FARR 6	Murphy Rodgers Baghouse	Herding Filtration System 01	Herding Filtration System 02
Process Weight (lb/hr)	503	503	503	503	503	503	503	113	113	113	113	113	503	503	113	113	113
PM Emission Rate (lb/hr)	0.21	0.21	0.21	0.08	0.12	0.20	0.04	0.15	0.10	0.09	0.11	0.59	0.18	0.18	0.011	0.020	0.24
Compliance with Allowable Emission Calculation																	
Calculated Allowable Emissions (E) (lb/hr) [1]	5.21	5.21	5.21	5.21	5.21	5.21	5.21	3.59	3.59	3.59	3.59	3.59	5.21	5.21	0.77	0.77	3.59
Compliance w/ PM Loading Standard	**Yes**	**Yes**	**Yes**	**Yes**	**Yes**	**Yes**	**Yes**	**Yes**	**Yes**	**Yes**	**Yes**	**Yes**	**Yes**	**Yes**	**Yes**	**Yes**	**Yes**

[1] **General Restrictions - New Equipment:**
If PW is less than 9,250 pounds per hour
$E = 0.045(PW)^{0.6}$
If PW is greater than 9,250 pounds per hour
$E = 1.10(PW)^{0.25}$

Summary Table 1: Facility Wide Criteria Pollutants

Nunhems USA

Source	Criteria Individual Source (lb/hr)						
	PM	PM10	PM2.5	NOx	SOx	CO	VOC
Propane Sources	0.062	0.062	0.062	1.160	0.178	0.669	0.089
Process Sources	2.826	2.826	0.858	33.237	1.730	4.225	1.563
Total	2.888	2.888	0.920	34.397	1.908	4.894	1.652
Level I Threshold		0.22	0.054	0.2	0.21	15	
Exceed Threshold		Yes	Yes	Yes	Yes	No	

Source	Criteria Individual Source (Ton/yr)							CO2e
	PM	PM10	PM2.5	NOx	SOx	CO	VOC	(ton/yr)
Propane Sources	0.003	0.003	0.003	0.047	0.007	0.027	0.004	1286
Process Sources	10.261	5.161	1.641	10.636	0.701	2.398	0.757	3283
Total	10.263	5.163	1.643	10.682	0.708	2.425	0.760	4569
Level I Threshold			0.35	1.2	1.2			
Exceed Threshold			Yes	Yes	No			

Summary Table 2: Criteria Pollutants for Propane Combustion Sources

Nunhems USA

Source	Criteria Individual Source (lb/hr)						
	PM	PM10	PM2.5	NOx	SOx	CO	VOC
Modine 75,000	5.74E-04	5.74E-04	5.74E-04	1.07E-02	1.64E-03	6.15E-03	8.20E-04
Modine 150,000	1.15E-03	1.15E-03	1.15E-03	2.13E-02	3.28E-03	1.23E-02	1.64E-03
Modine 250,000	1.91E-03	1.91E-03	1.91E-03	3.55E-02	5.46E-03	2.05E-02	2.73E-03
ADP 60,000	4.59E-04	4.59E-04	4.59E-04	8.52E-03	1.31E-03	4.92E-03	6.56E-04
Enerco 80,000	6.12E-04	6.12E-04	6.12E-04	1.14E-02	1.75E-03	6.56E-03	8.74E-04
Reznor 75,000	5.74E-04	5.74E-04	5.74E-04	1.07E-02	1.64E-03	6.15E-03	8.20E-04
Reznor 100,000	7.65E-04	7.65E-04	7.65E-04	1.42E-02	2.19E-03	8.20E-03	1.09E-03
Reznor 125,000	9.56E-04	9.56E-04	9.56E-04	1.78E-02	2.73E-03	1.02E-02	1.37E-03
Reznor 200,000	1.53E-03	1.53E-03	1.53E-03	2.84E-02	4.37E-03	1.64E-02	2.19E-03
Goodman 90,000	6.89E-04	6.89E-04	6.89E-04	1.28E-02	1.97E-03	7.38E-03	9.84E-04
Lennox 195,000	1.49E-03	1.49E-03	1.49E-03	2.77E-02	4.26E-03	1.60E-02	2.13E-03
York 45,000	3.44E-04	3.44E-04	3.44E-04	6.39E-03	9.84E-04	3.69E-03	4.92E-04
Cambridge 353,000	2.70E-03	2.70E-03	2.70E-03	5.02E-02	7.72E-03	2.89E-02	3.86E-03
Carrier 72,000	5.51E-04	5.51E-04	5.51E-04	1.02E-02	1.57E-03	5.90E-03	7.87E-04
Carrier 115,000	8.80E-04	8.80E-04	8.80E-04	1.63E-02	2.51E-03	9.43E-03	1.26E-03
Carrier 180,000	1.38E-03	1.38E-03	1.38E-03	2.56E-02	3.93E-03	1.48E-02	1.97E-03
Total	0.017	0.017	0.017	0.308	0.047	0.177	0.024

Source	Criteria Individual Source (Ton/yr)						
	PM	PM10	PM2.5	NOx	SOx	CO	VOC
Modine 75,000	0.003	0.003	0.003	0.047	0.007	0.027	0.004
Modine 150,000	0.005	0.005	0.005	0.093	0.014	0.054	0.007
Modine 250,000	0.008	0.008	0.008	0.156	0.024	0.090	0.012
ADP 60,000	0.002	0.002	0.002	0.037	0.006	0.022	0.003
Enerco 80,000	0.003	0.003	0.003	0.050	0.008	0.029	0.004
Reznor 75,000	0.003	0.003	0.003	0.047	0.007	0.027	0.004
Reznor 100,000	0.003	0.003	0.003	0.062	0.010	0.036	0.005
Reznor 125,000	0.004	0.004	0.004	0.078	0.012	0.045	0.006
Reznor 200,000	0.007	0.007	0.007	0.124	0.019	0.072	0.010
Goodman 90,000	0.003	0.003	0.003	0.056	0.009	0.032	0.004
Lennox 195,000	0.007	0.007	0.007	0.121	0.019	0.070	0.009
York 45,000	0.002	0.002	0.002	0.028	0.004	0.016	0.002
Cambridge 353,000	0.012	0.012	0.012	0.220	0.034	0.127	0.017
Carrier 72,000	0.002	0.002	0.002	0.045	0.007	0.026	0.003
Carrier 115,000	0.004	0.004	0.004	0.072	0.011	0.041	0.006
Carrier 180,000	0.006	0.006	0.006	0.112	0.017	0.065	0.009
Total	0.073	0.073	0.073	1.347	0.207	0.777	0.104

Summary Table 3: Greenhouse Gas Propane Sources

Source	Emission Rate (Individual Source)							
	CO_2		N_2O		CH_4		CO_2e	
	m ton/yr	ton/yr	m ton/yr	ton/yr	m ton/yr	ton/yr	m ton/yr	ton/yr
Modine 75,000	40.16	44.27	0.0006	0.0007	0.0030	0.0033	40.41	44.54
Modine 150,000	80.3	88.5	0.0012	0.0013	0.0059	0.0066	80.8	89.1
Modine 250,000	133.9	147.6	0.002	0.002	0.010	0.011	134.7	148.5
ADP 60,000	32.1	35.4	0.0005	0.0005	0.002	0.003	32.3	35.6
Enerco 80,000	42.8	47.2	0.001	0.001	0.003	0.003	43.1	47.5
Reznor 75,000	40.2	44.3	0.001	0.001	0.003	0.003	40.4	44.5
Reznor 100,000	53.5	59.0	0.001	0.001	0.004	0.004	53.9	59.4
Reznor 125,000	66.9	73.8	0.001	0.001	0.005	0.005	67.4	74.2
Reznor 200,000	107.1	118.0	0.002	0.002	0.008	0.009	107.8	118.8
Goodman 90,000	48.2	53.1	0.001	0.001	0.004	0.004	48.5	53.5
Lennox 195,000	104.4	115.1	0.002	0.002	0.008	0.009	105.1	115.8
York 45,000	24.1	26.6	0.0004	0.000	0.002	0.002	24.2	26.7
Cambridge 353,000	189.0	208.3	0.003	0.003	0.014	0.015	190.2	209.7
Carrier 72,000	38.6	42.5	0.001	0.001	0.003	0.003	38.8	42.8
Carrier 115,000	61.6	67.9	0.001	0.001	0.005	0.005	62.0	68.3
Carrier 180,000	96.4	106.2	0.001	0.002	0.007	0.008	97.0	106.9
Total	1159.2	1277.8	0.017	0.019	0.086	0.095	1166.5	1285.8

Number of Sources	Criteria Facility Wide (lb/hr)						
	PM	PM10	PM2.5	NOx	SOx	CO	VOC
1	0.001	0.001	0.001	0.011	0.002	0.006	0.001
13	0.015	0.015	0.015	0.277	0.043	0.160	0.021
1	0.002	0.002	0.002	0.036	0.005	0.020	0.003
1	0.000	0.000	0.000	0.009	0.001	0.005	0.001
3	0.002	0.002	0.002	0.034	0.005	0.020	0.003
1	0.001	0.001	0.001	0.011	0.002	0.006	0.001
2	0.002	0.002	0.002	0.028	0.004	0.016	0.002
3	0.003	0.003	0.003	0.053	0.008	0.031	0.004
1	0.002	0.002	0.002	0.028	0.004	0.016	0.002
2	0.001	0.001	0.001	0.026	0.004	0.015	0.002
3	0.004	0.004	0.004	0.083	0.013	0.048	0.006
4	0.001	0.001	0.001	0.026	0.004	0.015	0.002
5	0.014	0.014	0.014	0.251	0.039	0.145	0.019
4	0.002	0.002	0.002	0.041	0.006	0.024	0.003
12	0.011	0.011	0.011	0.196	0.030	0.113	0.015
2	0.003	0.003	0.003	0.051	0.008	0.030	0.004
	0.06	0.06	0.06	1.16	0.18	0.67	0.09

Total Number of	Criteria Facility Wide (Ton/yr)						
	PM	PM10	PM2.5	NOx	SOx	CO	VOC
1	0.003	0.003	0.003	0.047	0.007	0.027	0.004
13	0.065	0.065	0.065	1.213	0.187	0.700	0.093
1	0.008	0.008	0.008	0.156	0.024	0.090	0.012
1	0.002	0.002	0.002	0.037	0.006	0.022	0.003
3	0.008	0.008	0.008	0.149	0.023	0.086	0.011
1	0.003	0.003	0.003	0.047	0.007	0.027	0.004
2	0.007	0.007	0.007	0.124	0.019	0.072	0.010
3	0.013	0.013	0.013	0.233	0.036	0.135	0.018
1	0.007	0.007	0.007	0.124	0.019	0.072	0.010
2	0.006	0.006	0.006	0.112	0.017	0.065	0.009
3	0.020	0.020	0.020	0.364	0.056	0.210	0.028
4	0.006	0.006	0.006	0.112	0.017	0.065	0.009
5	0.059	0.059	0.059	1.098	0.169	0.634	0.084
4	0.010	0.010	0.010	0.179	0.028	0.103	0.014
12	0.046	0.046	0.046	0.859	0.132	0.495	0.066
2	0.012	0.012	0.012	0.224	0.034	0.129	0.017
	0.27	0.27	0.27	5.08	0.78	2.93	0.39

Number of Sources	Emission Rate (All Sources)							
	CO_2		N_2O		CH_4		CO_2e	
	m ton/yr	ton/yr	m ton/yr	ton/yr	m ton/yr	ton/yr	m ton/yr	ton/yr
1	40.2	44.3	0.001	0.001	0.003	0.003	40.4	44.5
13	1,044.1	1,150.9	0.015	0.017	0.077	0.085	1,050.7	1,158.1
1	133.9	147.6	0.002	0.002	0.010	0.011	134.7	148.5
1	32.1	35.4	0.000	0.001	0.002	0.003	32.3	35.6
3	128.5	141.7	0.002	0.002	0.010	0.010	129.3	142.5
1	40.2	44.3	0.001	0.001	0.003	0.003	40.4	44.5
2	107.1	118.0	0.002	0.002	0.008	0.009	107.8	118.8
3	200.8	221.3	0.003	0.003	0.015	0.016	202.1	222.7
1	107.1	118.0	0.002	0.002	0.008	0.009	107.8	118.8
2	96.4	106.2	0.001	0.002	0.007	0.008	97.0	106.9
3	313.2	345.3	0.005	0.005	0.023	0.026	315.2	347.4
4	96.4	106.2	0.001	0.002	0.007	0.008	97.0	106.9
5	945.1	1,041.7	0.014	0.015	0.070	0.077	951.0	1,048.3
4	154.2	170.0	0.002	0.003	0.011	0.013	155.2	171.0
12	738.9	814.5	0.011	0.012	0.055	0.060	743.5	819.6
2	192.8	212.5	0.003	0.003	0.014	0.016	194.0	213.8
	4,370.9	4,818.0	0.065	0.071	0.324	0.357	4398.2	4848.2

Table 1. Modine HVAC 75,000 BTU

Manufacturer	**Modine**
Model No.	**HD75AHO134**
Fuel Type	Propane
Maximum Heat Input Rate (BTU)	75000
Maximum Hours of Operation	8,760
Heat value of Fuel (Btu/gal)	91,500
Fuel use (gal/hr)	0.82
Fuel use (gal/yr)	7,180

91.5 x 10^6 BTU / 10^3 Gal propane (AP 42 Table 1-5.1, 7/2008)
Assume sulfur content of propane = 0.2 g/100 ft^3 propane (Compilation of Air Pollutant Emission Factors, Volume I,Section 1.5)

			Uncontrolled Potential to Emit		
Pollutant	**CAS No.**	**Emission Factor[1] (lb/10^3 Gal)**	**Emission Rate (lb/hr)**	**Emission Rate (lb/yr)**	**Emission Rate (ton/yr)**
Total Particulate Matter [2]		0.7	5.74E-04	5	0.003
PM_{10} [2]		0.7	5.74E-04	5	0.003
$PM_{2.5}$ [2]		0.7	5.74E-04	5	0.003
Nitrogen Oxides (NOx)		13.0	1.07E-02	93	0.047
Sulfur Oxides		2.0	1.64E-03	14	0.007
Carbon Monoxide (CO)		7.5	6.15E-03	54	0.027
TOC [3]		1.0	8.20E-04	7	0.004

Notes:
[1] Source AP 42 Table 1.5-1, July 2008
[2] PM emission factor is assumed to equal PM_{10} and $PM_{2.5}$
[3] TOC is assumed to equal VOC.

Greenhouse Gase Emissions						
Green House Gases	**EF (Propane) kg/MMBtu**	**HHV**	**Reference**	**Input (gal/yr)**	**Emission Rate[1,2,3] (metric ton/yr)**	**(ton/year)**
CO_2	61.46	0.091	40 CFR 98 Subpart C Equation C-1 Tier 1	7,180	40.16	44.27
N_2O	6.0E-04	0.138	40 CFR 98 Subpart C Equation C-8 (Tiers 1 & 3)	7,180	0.0006	0.0007
CH_4	3.0E-03	0.138	40 CFR 98 Subpart C Equation C-8 (Tiers 1 & 3)	7,180	0.0030	0.0033
CO2e			40 CFR 98 Part A		40.41	44.54

[1]Eqn C-1: $CO_2 = 1 \times 10^{-3} \times$ Fuel x HHV x EF
Fuel = Volume of fuel combusted per year, (gal/Year)
EF = Fuel-specific default CO_2 emission factor for natural gas, from Table C-1 of 40 CFR Part 98 Subpart C (kg CO_2/MMBTU)
HHV = Default high heat value of the fuel, from Table C-1 of 40 CFR Part 98 Subpart C (MMBTU/SCF)
1×10^{-3} = Conversion Factor from Kilograms to Metric Tons

[2]Eqn C-8: CH_4 or $N_2O = 1 \times 10^{-3} \times$ Fuel x HHV x EF
Fuel = Volume of fuel combusted per year, (gal/Year)
EF = Fuel-specific default CH_4 or N_2O emission factor for natural gas, from Table C-2 of 40 CFR Part 98 Subpart C (kg CH_4 or N_2O/MMBTU)
HHV = Default high heat value of the fuel, from Table C-1 of 40 CFR Part 98 Subpart C (MMBTU/SCF)
1×10^{-3} = Conversion Factor from Kilograms to Metric Tons

[3]CO_2e = (GWP CO_2 x CO_2 metric ton/yr) + (GWP CH4 x CH4 metric ton/yr) + (GWP N_2O x N_2O metric ton/yr)
Global Warming Potential (GWP) for Selected GHG - 40 CFR 98 Subpart A, Table A-1

GWP CO_2 =	1.00
GWP CH_4 =	25.00
GWP N_2O =	298.00

Table 2. Modine HVAC 150,000 BTU

Manufacturer	**Modine**
Model No.	**TLP150H74**
Fuel Type	Propane
Maximum Heat Input Rate (BTU)	150000
Maximum Hours of Operation	8,760
Heat value of Fuel (Btu/gal)	91,500
Fuel use (gal/hr)	1.64
Fuel use (gal/yr)	14,361

91.5 x 10^6 BTU / 10^3 Gal propane (AP 42 Table 1-5.1, 7/2008)

Assume sulfur content of propane = 0.2 g/100 ft^3 propane (Compilation of Air Pollutant Emission Factors, Volume I,Section 1.5)

			Uncontrolled Potential to Emit		
Pollutant	**CAS No.**	**Emission Factor[1] (lb/10^3 Gal)**	**Emission Rate (lb/hr)**	**Emission Rate (lb/yr)**	**Emission Rate (ton/yr)**
Total Particulate Matter [2]		0.7	1.15E-03	10	0.005
PM_{10} [2]		0.7	1.15E-03	10	0.005
$PM_{2.5}$ [2]		0.7	1.15E-03	10	0.005
Nitrogen Oxides (NOx)		13.0	2.13E-02	187	0.093
Sulfur Oxides		2.0	3.28E-03	29	0.014
Carbon Monoxide (CO)		7.5	1.23E-02	108	0.054
TOC [3]		1.0	1.64E-03	14	0.007

Notes:

[1] Source AP 42 Table 1.5-1, July 2008

[2] PM emission factor is assumed to equal PM_{10} and $PM_{2.5}$

[3] TOC is assumed to equal VOC.

Greenhouse Gase Emissions						
Green House Gases	**EF (Propane) kg/MMBtu**	**HHV**	**Reference**	**Input (gal/yr)**	**Emission Rate[1,2,3] (metric ton/yr)**	**(ton/year)**
CO_2	61.46	0.091	40 CFR 98 Subpart C Equation C-1 Tier 1	14,361	80.32	88.53
N_2O	6.0E-04	0.138	40 CFR 98 Subpart C Equation C-8 (Tiers 1 & 3)	14,361	0.0012	0.0013
CH_4	3.0E-03	0.138	40 CFR 98 Subpart C Equation C-8 (Tiers 1 & 3)	14,361	0.0059	0.0066
CO2e			40 CFR 98 Part A		80.82	89.09

[1]Eqn C-1: CO_2 = 1 x 10^{-3} x Fuel x HHV x EF

Fuel = Volume of fuel combusted per year, (gal/Year)

EF = Fuel-specific default CO_2 emission factor for natural gas, from Table C-1 of 40 CFR Part 98 Subpart C (kg CO_2/MMBTU)

HHV = Default high heat value of the fuel, from Table C-1 of 40 CFR Part 98 Subpart C (MMBTU/SCF)

1 x 10^{-3} = Conversion Factor from Kilograms to Metric Tons

[2]Eqn C-8: CH_4 or N_2O = 1 x 10^{-3} x Fuel x HHV x EF

Fuel = Volume of fuel combusted per year, (gal/Year)

EF = Fuel-specific default CH_4 or N_2O emission factor for natural gas, from Table C-2 of 40 CFR Part 98 Subpart C (kg CH_4 or N_2O/MMBTU)

HHV = Default high heat value of the fuel, from Table C-1 of 40 CFR Part 98 Subpart C (MMBTU/SCF)

1 x 10^{-3} = Conversion Factor from Kilograms to Metric Tons

[3]CO_2e = (GWP CO_2 x CO_2 metric ton/yr) + (GWP CH4 x CH4 metric ton/yr) + (GWP N_2O x N_2O metric ton/yr)

Global Warming Potential (GWP) for Selected GHG - 40 CFR 98 Subpart A, Table A-1

GWP CO_2 =	1.00
GWP CH_4 =	25.00
GWP N_2O =	298.00

Table 3. Modine HVAC 250,000 BTU

Manufacturer	**Modine**
Model No.	**HFP250TMR HP70F2**
Fuel Type	Propane
Maximum Heat Input Rate (BTU)	250000
Maximum Hours of Operation	8,760
Heat value of Fuel (Btu/gal)	91,500
Fuel use (gal/hr)	2.73
Fuel use (gal/yr)	23,934

91.5×10^6 BTU / 10^3 Gal propane (AP 42 Table 1-5.1, 7/2008)
Assume sulfur content of propane = 0.2 g/100 ft^3 propane (Compilation of Air Pollutant Emission Factors, Volume I,Section 1.5)

			Uncontrolled Potential to Emit		
Pollutant	**CAS No.**	**Emission Factor[1] (lb/10^3 Gal)**	**Emission Rate (lb/hr)**	**Emission Rate (lb/yr)**	**Emission Rate (ton/yr)**
Total Particulate Matter [2]		0.7	1.91E-03	17	0.008
PM_{10} [2]		0.7	1.91E-03	17	0.008
$PM_{2.5}$ [2]		0.7	1.91E-03	17	0.008
Nitrogen Oxides (NOx)		13.0	3.55E-02	311	0.156
Sulfur Oxides		2.0	5.46E-03	48	0.024
Carbon Monoxide (CO)		7.5	2.05E-02	180	0.090
TOC [3]		1.0	2.73E-03	24	0.012

Notes:
[1] Source AP 42 Table 1.5-1, July 2008
[2] PM emission factor is assumed to equal PM_{10} and $PM_{2.5}$
[3] TOC is assumed to equal VOC.

Greenhouse Gase Emissions						
Green House Gases	**EF (Propane) kg/MMBtu**	**HHV**	**Reference**	**Input (gal/yr)**	**Emission Rate[1,2,3] (metric ton/yr)**	**(ton/year)**
CO_2	61.46	0.091	40 CFR 98 Subpart C Equation C-1 Tier 1	23,934	133.86	147.56
N_2O	6.0E-04	0.138	40 CFR 98 Subpart C Equation C-8 (Tiers 1 & 3)	23,934	0.0020	0.0022
CH_4	3.0E-03	0.138	40 CFR 98 Subpart C Equation C-8 (Tiers 1 & 3)	23,934	0.0099	0.0109
CO2e			40 CFR 98 Part A		134.70	148.48

[1]Eqn C-1: $CO_2 = 1 \times 10^{-3} \times$ Fuel x HHV x EF
Fuel = Volume of fuel combusted per year, (gal/Year)
EF = Fuel-specific default CO_2 emission factor for natural gas, from Table C-1 of 40 CFR Part 98 Subpart C (kg CO_2/MMBTU)
HHV = Default high heat value of the fuel, from Table C-1 of 40 CFR Part 98 Subpart C (MMBTU/SCF)
1×10^{-3} = Conversion Factor from Kilograms to Metric Tons

[2]Eqn C-8: CH_4 or $N_2O = 1 \times 10^{-3} \times$ Fuel x HHV x EF
Fuel = Volume of fuel combusted per year, (gal/Year)
EF = Fuel-specific default CH_4 or N_2O emission factor for natural gas, from Table C-2 of 40 CFR Part 98 Subpart C (kg CH_4 or N_2O/MMBTU)
HHV = Default high heat value of the fuel, from Table C-1 of 40 CFR Part 98 Subpart C (MMBTU/SCF)
1×10^{-3} = Conversion Factor from Kilograms to Metric Tons

[3]CO_2e = (GWP CO_2 x CO_2 metric ton/yr) + (GWP CH4 x CH4 metric ton/yr) + (GWP N_2O x N_2O metric ton/yr)
Global Warming Potential (GWP) for Selected GHG - 40 CFR 98 Subpart A, Table A-1

GWP CO_2 =	1.00
GWP CH_4 =	25.00
GWP N_2O =	298.00

Table 4. Advanced Distributer Products Heater 60,000 BTU

Manufacturer	**ADP**
Model No.	**CUHN-60A-1**
Fuel Type	Propane
Maximum Heat Input Rate (BTU)	60000
Maximum Hours of Operation	8,760
Heat value of Fuel (Btu/gal)	91,500
Fuel use (gal/hr)	0.66
Fuel use (gal/yr)	5,744

91.5×10^6 BTU / 10^3 Gal propane (AP 42 Table 1-5.1, 7/2008)

Assume sulfur content of propane = 0.2 g/100 ft^3 propane (Compilation of Air Pollutant Emission Factors, Volume I,Section 1.5)

			Uncontrolled Potential to Emit		
Pollutant	**CAS No.**	**Emission Factor[1] (lb/10^3 Gal)**	**Emission Rate (lb/hr)**	**Emission Rate (lb/yr)**	**Emission Rate (ton/yr)**
Total Particulate Matter [2]		0.7	4.59E-04	4	0.002
PM_{10} [2]		0.7	4.59E-04	4	0.002
$PM_{2.5}$ [2]		0.7	4.59E-04	4	0.002
Nitrogen Oxides (NOx)		13.0	8.52E-03	75	0.037
Sulfur Oxides		2.0	1.31E-03	11	0.006
Carbon Monoxide (CO)		7.5	4.92E-03	43	0.022
TOC [3]		1.0	6.56E-04	6	0.003

Notes:

[1] Source AP 42 Table 1.5-1, July 2008

[2] PM emission factor is assumed to equal PM_{10} and $PM_{2.5}$

[3] TOC is assumed to equal VOC.

Greenhouse Gase Emissions						
Green House Gases	**EF (Propane) kg/MMBtu**	**HHV**	**Reference**	**Input (gal/yr)**	**Emission Rate[1,2,3] (metric ton/yr)**	**(ton/year)**
CO_2	61.46	0.091	40 CFR 98 Subpart C Equation C-1 Tier 1	5,744	32.13	35.41
N_2O	6.0E-04	0.138	40 CFR 98 Subpart C Equation C-8 (Tiers 1 & 3)	5,744	0.0005	0.0005
CH_4	3.0E-03	0.138	40 CFR 98 Subpart C Equation C-8 (Tiers 1 & 3)	5,744	0.0024	0.0026
CO2e			40 CFR 98 Part A		32.33	35.64

[1]Eqn C-1: $CO_2 = 1 \times 10^{-3} \times$ Fuel x HHV x EF

Fuel = Volume of fuel combusted per year, (gal/Year)

EF = Fuel-specific default CO_2 emission factor for natural gas, from Table C-1 of 40 CFR Part 98 Subpart C (kg CO_2/MMBTU)

HHV = Default high heat value of the fuel, from Table C-1 of 40 CFR Part 98 Subpart C (MMBTU/SCF)

1×10^{-3} = Conversion Factor from Kilograms to Metric Tons

[2]Eqn C-8: CH_4 or $N_2O = 1 \times 10^{-3} \times$ Fuel x HHV x EF

Fuel = Volume of fuel combusted per year, (gal/Year)

EF = Fuel-specific default CH_4 or N_2O emission factor for natural gas, from Table C-2 of 40 CFR Part 98 Subpart C (kg CH_4 or N_2O/MMBTU)

HHV = Default high heat value of the fuel, from Table C-1 of 40 CFR Part 98 Subpart C (MMBTU/SCF)

1×10^{-3} = Conversion Factor from Kilograms to Metric Tons

[3]CO_2e = (GWP CO_2 x CO_2 metric ton/yr) + (GWP CH4 x CH4 metric ton/yr) + (GWP N_2O x N_2O metric ton/yr)

Global Warming Potential (GWP) for Selected GHG - 40 CFR 98 Subpart A, Table A-1

GWP CO_2 =	1.00
GWP CH_4 =	25.00
GWP N_2O =	298.00

Table 5. Enerco Heater 80,000 BTU

Manufacturer	**Enerco**
Model No.	**ERXL-80**
Fuel Type	Propane
Maximum Heat Input Rate (BTU)	80000
Maximum Hours of Operation	8,760
Heat value of Fuel (Btu/gal)	91,500
Fuel use (gal/hr)	0.87
Fuel use (gal/yr)	7,659

91.5 x 10^6 BTU / 10^3 Gal propane (AP 42 Table 1-5.1, 7/2008)
Assume sulfur content of propane = 0.2 g/100 ft^3 propane (Compilation of Air Pollutant Emission Factors, Volume I,Section 1.5)

			Uncontrolled Potential to Emit		
Pollutant	**CAS No.**	**Emission Factor[1] (lb/10^3 Gal)**	**Emission Rate (lb/hr)**	**Emission Rate (lb/yr)**	**Emission Rate (ton/yr)**
Total Particulate Matter [2]		0.7	6.12E-04	5	0.003
PM_{10} [2]		0.7	6.12E-04	5	0.003
$PM_{2.5}$ [2]		0.7	6.12E-04	5	0.003
Nitrogen Oxides (NOx)		13.0	1.14E-02	100	0.050
Sulfur Oxides		2.0	1.75E-03	15	0.008
Carbon Monoxide (CO)		7.5	6.56E-03	57	0.029
TOC [3]		1.0	8.74E-04	8	0.004

Notes:
[1] Source AP 42 Table 1.5-1, July 2008
[2] PM emission factor is assumed to equal PM_{10} and $PM_{2.5}$
[3] TOC is assumed to equal VOC.

Greenhouse Gase Emissions						
Green House Gases	**EF (Propane) kg/MMBtu**	**HHV**	**Reference**	**Input (gal/yr)**	**Emission Rate[1,2,3] (metric ton/yr)**	**(ton/year)**
CO_2	61.46	0.091	40 CFR 98 Subpart C Equation C-1 Tier 1	7,659	42.84	47.22
N_2O	6.0E-04	0.138	40 CFR 98 Subpart C Equation C-8 (Tiers 1 & 3)	7,659	0.0006	0.0007
CH_4	3.0E-03	0.138	40 CFR 98 Subpart C Equation C-8 (Tiers 1 & 3)	7,659	0.0032	0.0035
CO2e			40 CFR 98 Part A		43.10	47.51

[1]Eqn C-1: $CO_2 = 1 \times 10^{-3} \times$ Fuel x HHV x EF
Fuel = Volume of fuel combusted per year, (gal/Year)
EF = Fuel-specific default CO_2 emission factor for natural gas, from Table C-1 of 40 CFR Part 98 Subpart C (kg CO_2/MMBTU)
HHV = Default high heat value of the fuel, from Table C-1 of 40 CFR Part 98 Subpart C (MMBTU/SCF)
1×10^{-3} = Conversion Factor from Kilograms to Metric Tons

[2]Eqn C-8: CH_4 or $N_2O = 1 \times 10^{-3} \times$ Fuel x HHV x EF
Fuel = Volume of fuel combusted per year, (gal/Year)
EF = Fuel-specific default CH_4 or N_2O emission factor for natural gas, from Table C-2 of 40 CFR Part 98 Subpart C (kg CH_4 or N_2O/MMBTU)
HHV = Default high heat value of the fuel, from Table C-1 of 40 CFR Part 98 Subpart C (MMBTU/SCF)
1×10^{-3} = Conversion Factor from Kilograms to Metric Tons

[3]CO_2e = (GWP CO_2 x CO_2 metric ton/yr) + (GWP CH4 x CH4 metric ton/yr) + (GWP N_2O x N_2O metric ton/yr)
Global Warming Potential (GWP) for Selected GHG - 40 CFR 98 Subpart A, Table A-1

GWP CO_2 =	1.00
GWP CH_4 =	25.00
GWP N_2O =	298.00

Table 6. Reznor Heater 75,000 BTU

Manufacturer	**Reznor**
Model No.	**Model F - 75**
Fuel Type	Propane
Maximum Heat Input Rate (BTU)	75000
Maximum Hours of Operation	8,760
Heat value of Fuel (Btu/gal)	91,500
Fuel use (gal/hr)	0.82
Fuel use (gal/yr)	7,180

91.5 x 10^6 BTU / 10^3 Gal propane (AP 42 Table 1-5.1, 7/2008)
Assume sulfur content of propane = 0.2 g/100 ft^3 propane (Compilation of Air Pollutant Emission Factors, Volume I,Section 1.5)

			Uncontrolled Potential to Emit		
Pollutant	**CAS No.**	**Emission Factor[1] (lb/10^3 Gal)**	**Emission Rate (lb/hr)**	**Emission Rate (lb/yr)**	**Emission Rate (ton/yr)**
Total Particulate Matter [2]		0.7	5.74E-04	5	0.003
PM_{10} [2]		0.7	5.74E-04	5	0.003
$PM_{2.5}$ [2]		0.7	5.74E-04	5	0.003
Nitrogen Oxides (NOx)		13.0	1.07E-02	93	0.047
Sulfur Oxides		2.0	1.64E-03	14	0.007
Carbon Monoxide (CO)		7.5	6.15E-03	54	0.027
TOC [3]		1.0	8.20E-04	7	0.004

Notes:
[1] Source AP 42 Table 1.5-1, July 2008
[2] PM emission factor is assumed to equal PM_{10} and $PM_{2.5}$
[3] TOC is assumed to equal VOC.

Greenhouse Gase Emissions						
Green House Gases	**EF (Propane) kg/MMBtu**	**HHV**	**Reference**	**Input (gal/yr)**	**Emission Rate[1,2,3] (metric ton/yr)**	**(ton/year)**
CO_2	61.46	0.091	40 CFR 98 Subpart C Equation C-1 Tier 1	7,180	40.16	44.27
N_2O	6.0E-04	0.138	40 CFR 98 Subpart C Equation C-8 (Tiers 1 & 3)	7,180	0.0006	0.0007
CH_4	3.0E-03	0.138	40 CFR 98 Subpart C Equation C-8 (Tiers 1 & 3)	7,180	0.0030	0.0033
CO2e			40 CFR 98 Part A		40.41	44.54

[1]Eqn C-1: $CO_2 = 1 \times 10^{-3} \times Fuel \times HHV \times EF$
Fuel = Volume of fuel combusted per year, (gal/Year)
EF = Fuel-specific default CO_2 emission factor for natural gas, from Table C-1 of 40 CFR Part 98 Subpart C (kg CO_2/MMBTU)
HHV = Default high heat value of the fuel, from Table C-1 of 40 CFR Part 98 Subpart C (MMBTU/SCF)
1×10^{-3} = Conversion Factor from Kilograms to Metric Tons

[2]Eqn C-8: CH_4 or $N_2O = 1 \times 10^{-3} \times Fuel \times HHV \times EF$
Fuel = Volume of fuel combusted per year, (gal/Year)
EF = Fuel-specific default CH_4 or N_2O emission factor for natural gas, from Table C-2 of 40 CFR Part 98 Subpart C (kg CH_4 or N_2O/MMBTU)
HHV = Default high heat value of the fuel, from Table C-1 of 40 CFR Part 98 Subpart C (MMBTU/SCF)
1×10^{-3} = Conversion Factor from Kilograms to Metric Tons

[3]CO_2e = (GWP CO_2 x CO_2 metric ton/yr) + (GWP CH4 x CH4 metric ton/yr) + (GWP N_2O x N_2O metric ton/yr)
Global Warming Potential (GWP) for Selected GHG - 40 CFR 98 Subpart A, Table A-1

GWP CO_2 =	1.00
GWP CH_4 =	25.00
GWP N_2O =	298.00

Table 7. Reznor Heater 100,000 BTU

Manufacturer	**Reznor**
Model No.	**Model F - 100**
Fuel Type	Propane
Maximum Heat Input Rate (BTU)	100000
Maximum Hours of Operation	8,760
Heat value of Fuel (Btu/gal)	91,500
Fuel use (gal/hr)	1.09
Fuel use (gal/yr)	9,574

91.5×10^6 BTU / 10^3 Gal propane (AP 42 Table 1-5.1, 7/2008)

Assume sulfur content of propane = 0.2 g/100 ft^3 propane (Compilation of Air Pollutant Emission Factors, Volume I,Section 1.5)

			Uncontrolled Potential to Emit		
Pollutant	**CAS No.**	**Emission Factor[1] (lb/10^3 Gal)**	**Emission Rate (lb/hr)**	**Emission Rate (lb/yr)**	**Emission Rate (ton/yr)**
Total Particulate Matter [2]		0.7	7.65E-04	7	0.003
PM_{10} [2]		0.7	7.65E-04	7	0.003
$PM_{2.5}$ [2]		0.7	7.65E-04	7	0.003
Nitrogen Oxides (NOx)		13.0	1.42E-02	124	0.062
Sulfur Oxides		2.0	2.19E-03	19	0.010
Carbon Monoxide (CO)		7.5	8.20E-03	72	0.036
TOC [3]		1.0	1.09E-03	10	0.005

Notes:

[1] Source AP 42 Table 1.5-1, July 2008

[2] PM emission factor is assumed to equal PM_{10} and $PM_{2.5}$

[3] TOC is assumed to equal VOC.

Greenhouse Gase Emissions						
Green House Gases	**EF (Propane) kg/MMBtu**	**HHV**	**Reference**	**Input (gal/yr)**	**Emission Rate[1,2,3] (metric ton/yr)**	**(ton/year)**
CO_2	61.46	0.091	40 CFR 98 Subpart C Equation C-1 Tier 1	9,574	53.54	59.02
N_2O	6.0E-04	0.138	40 CFR 98 Subpart C Equation C-8 (Tiers 1 & 3)	9,574	0.0008	0.0009
CH_4	3.0E-03	0.138	40 CFR 98 Subpart C Equation C-8 (Tiers 1 & 3)	9,574	0.0040	0.0044
CO2e			40 CFR 98 Part A		53.88	59.39

[1]Eqn C-1: $CO_2 = 1 \times 10^{-3} \times$ Fuel x HHV x EF

Fuel = Volume of fuel combusted per year, (gal/Year)

EF = Fuel-specific default CO_2 emission factor for natural gas, from Table C-1 of 40 CFR Part 98 Subpart C (kg CO_2/MMBTU)

HHV = Default high heat value of the fuel, from Table C-1 of 40 CFR Part 98 Subpart C (MMBTU/SCF)

1×10^{-3} = Conversion Factor from Kilograms to Metric Tons

[2]Eqn C-8: CH_4 or $N_2O = 1 \times 10^{-3} \times$ Fuel x HHV x EF

Fuel = Volume of fuel combusted per year, (gal/Year)

EF = Fuel-specific default CH_4 or N_2O emission factor for natural gas, from Table C-2 of 40 CFR Part 98 Subpart C (kg CH_4 or N_2O/MMBTU)

HHV = Default high heat value of the fuel, from Table C-1 of 40 CFR Part 98 Subpart C (MMBTU/SCF)

1×10^{-3} = Conversion Factor from Kilograms to Metric Tons

[3]CO_2e = (GWP CO_2 x CO_2 metric ton/yr) + (GWP CH4 x CH4 metric ton/yr) + (GWP N_2O x N_2O metric ton/yr)

Global Warming Potential (GWP) for Selected GHG - 40 CFR 98 Subpart A, Table A-1

GWP CO_2 =	1.00
GWP CH_4 =	25.00
GWP N_2O =	298.00

Table 8. Reznor Heater 125,000 BTU

Manufacturer	**Reznor**
Model No.	**Model F - 125**
Fuel Type	Propane
Maximum Heat Input Rate (BTU)	125000
Maximum Hours of Operation	8,760
Heat value of Fuel (Btu/gal)	91,500
Fuel use (gal/hr)	1.37
Fuel use (gal/yr)	11,967

91.5 x 10^6 BTU / 10^3 Gal propane (AP 42 Table 1-5.1, 7/2008)
Assume sulfur content of propane = 0.2 g/100 ft^3 propane (Compilation of Air Pollutant Emission Factors, Volume I,Section 1.5)

			Uncontrolled Potential to Emit		
Pollutant	**CAS No.**	**Emission Factor[1] (lb/10^3 Gal)**	**Emission Rate (lb/hr)**	**Emission Rate (lb/yr)**	**Emission Rate (ton/yr)**
Total Particulate Matter [2]		0.7	9.56E-04	8	0.004
PM_{10} [2]		0.7	9.56E-04	8	0.004
$PM_{2.5}$ [2]		0.7	9.56E-04	8	0.004
Nitrogen Oxides (NOx)		13.0	1.78E-02	156	0.078
Sulfur Oxides		2.0	2.73E-03	24	0.012
Carbon Monoxide (CO)		7.5	1.02E-02	90	0.045
TOC [3]		1.0	1.37E-03	12	0.006

Notes:
[1] Source AP 42 Table 1.5-1, July 2008
[2] PM emission factor is assumed to equal PM_{10} and $PM_{2.5}$
[3] TOC is assumed to equal VOC.

Greenhouse Gase Emissions						
Green House Gases	**EF (Propane) kg/MMBtu**	**HHV**	**Reference**	**Input (gal/yr)**	**Emission Rate[1,2,3] (metric ton/yr)**	**(ton/year)**
CO_2	61.46	0.091	40 CFR 98 Subpart C Equation C-1 Tier 1	11,967	66.93	73.78
N_2O	6.0E-04	0.138	40 CFR 98 Subpart C Equation C-8 (Tiers 1 & 3)	11,967	0.0010	0.0011
CH_4	3.0E-03	0.138	40 CFR 98 Subpart C Equation C-8 (Tiers 1 & 3)	11,967	0.0050	0.0055
CO2e			40 CFR 98 Part A		67.35	74.24

[1]Eqn C-1: $CO_2 = 1 \times 10^{-3} \times Fuel \times HHV \times EF$
Fuel = Volume of fuel combusted per year, (gal/Year)
EF = Fuel-specific default CO_2 emission factor for natural gas, from Table C-1 of 40 CFR Part 98 Subpart C (kg CO_2/MMBTU)
HHV = Default high heat value of the fuel, from Table C-1 of 40 CFR Part 98 Subpart C (MMBTU/SCF)
1×10^{-3} = Conversion Factor from Kilograms to Metric Tons

[2]Eqn C-8: CH_4 or $N_2O = 1 \times 10^{-3} \times Fuel \times HHV \times EF$
Fuel = Volume of fuel combusted per year, (gal/Year)
EF = Fuel-specific default CH_4 or N_2O emission factor for natural gas, from Table C-2 of 40 CFR Part 98 Subpart C (kg CH_4 or N_2O/MMBTU)
HHV = Default high heat value of the fuel, from Table C-1 of 40 CFR Part 98 Subpart C (MMBTU/SCF)
1×10^{-3} = Conversion Factor from Kilograms to Metric Tons

[3]CO_2e = (GWP CO_2 x CO_2 metric ton/yr) + (GWP CH4 x CH4 metric ton/yr) + (GWP N_2O x N_2O metric ton/yr)
Global Warming Potential (GWP) for Selected GHG - 40 CFR 98 Subpart A, Table A-1

GWP CO_2 =	1.00
GWP CH_4 =	25.00
GWP N_2O =	298.00

Table 9. Reznor Heater 200,000 BTU

Manufacturer	**Reznor**
Model No.	**Model F - 200**
Fuel Type	Propane
Maximum Heat Input Rate (BTU)	200000
Maximum Hours of Operation	8,760
Heat value of Fuel (Btu/gal)	91,500
Fuel use (gal/hr)	2.19
Fuel use (gal/yr)	19,148

91.5×10^6 BTU / 10^3 Gal propane (AP 42 Table 1-5.1, 7/2008)

Assume sulfur content of propane = 0.2 g/100 ft^3 propane (Compilation of Air Pollutant Emission Factors, Volume I,Section 1.5)

			Uncontrolled Potential to Emit		
Pollutant	**CAS No.**	**Emission Factor[1] (lb/10^3 Gal)**	**Emission Rate (lb/hr)**	**Emission Rate (lb/yr)**	**Emission Rate (ton/yr)**
Total Particulate Matter [2]		0.7	1.53E-03	13	0.007
PM_{10} [2]		0.7	1.53E-03	13	0.007
$PM_{2.5}$ [2]		0.7	1.53E-03	13	0.007
Nitrogen Oxides (NOx)		13.0	2.84E-02	249	0.124
Sulfur Oxides		2.0	4.37E-03	38	0.019
Carbon Monoxide (CO)		7.5	1.64E-02	144	0.072
TOC [3]		1.0	2.19E-03	19	0.010

Notes:

[1] Source AP 42 Table 1.5-1, July 2008

[2] PM emission factor is assumed to equal PM_{10} and $PM_{2.5}$

[3] TOC is assumed to equal VOC.

Greenhouse Gase Emissions						
Green House Gases	**EF (Propane) kg/MMBtu**	**HHV**	**Reference**	**Input (gal/yr)**	**Emission Rate[1,2,3] (metric ton/yr)**	**(ton/year)**
CO_2	61.46	0.091	40 CFR 98 Subpart C Equation C-1 Tier 1	19,148	107.09	118.04
N_2O	6.0E-04	0.138	40 CFR 98 Subpart C Equation C-8 (Tiers 1 & 3)	19,148	0.0016	0.0017
CH_4	3.0E-03	0.138	40 CFR 98 Subpart C Equation C-8 (Tiers 1 & 3)	19,148	0.0079	0.0087
CO2e			40 CFR 98 Part A		107.76	118.78

[1]Eqn C-1: $CO_2 = 1 \times 10^{-3} \times$ Fuel x HHV x EF

Fuel = Volume of fuel combusted per year, (gal/Year)

EF = Fuel-specific default CO_2 emission factor for natural gas, from Table C-1 of 40 CFR Part 98 Subpart C (kg CO_2/MMBTU)

HHV = Default high heat value of the fuel, from Table C-1 of 40 CFR Part 98 Subpart C (MMBTU/SCF)

1×10^{-3} = Conversion Factor from Kilograms to Metric Tons

[2]Eqn C-8: CH_4 or $N_2O = 1 \times 10^{-3} \times$ Fuel x HHV x EF

Fuel = Volume of fuel combusted per year, (gal/Year)

EF = Fuel-specific default CH_4 or N_2O emission factor for natural gas, from Table C-2 of 40 CFR Part 98 Subpart C (kg CH_4 or N_2O/MMBTU)

HHV = Default high heat value of the fuel, from Table C-1 of 40 CFR Part 98 Subpart C (MMBTU/SCF)

1×10^{-3} = Conversion Factor from Kilograms to Metric Tons

[3]CO_2e = (GWP CO_2 x CO_2 metric ton/yr) + (GWP CH4 x CH4 metric ton/yr) + (GWP N_2O x N_2O metric ton/yr)

Global Warming Potential (GWP) for Selected GHG - 40 CFR 98 Subpart A, Table A-1

GWP CO_2 =	1.00
GWP CH_4 =	25.00
GWP N_2O =	298.00

Table 10. Goodman HVAC 90,000 BTU

Manufacturer	**Goodman**
Model No.	**CPG036**
Fuel Type	Propane
Maximum Heat Input Rate (BTU)	90000
Maximum Hours of Operation	8,760
Heat value of Fuel (Btu/gal)	91,500
Fuel use (gal/hr)	0.98
Fuel use (gal/yr)	8,616

91.5 x 10^6 BTU / 10^3 Gal propane (AP 42 Table 1-5.1, 7/2008)

Assume sulfur content of propane = 0.2 g/100 ft^3 propane (Compilation of Air Pollutant Emission Factors, Volume I,Section 1.5)

			Uncontrolled Potential to Emit		
Pollutant	**CAS No.**	**Emission Factor[1] (lb/10^3 Gal)**	**Emission Rate (lb/hr)**	**Emission Rate (lb/yr)**	**Emission Rate (ton/yr)**
Total Particulate Matter [2]		0.7	6.89E-04	6	0.003
PM_{10} [2]		0.7	6.89E-04	6	0.003
$PM_{2.5}$ [2]		0.7	6.89E-04	6	0.003
Nitrogen Oxides (NOx)		13.0	1.28E-02	112	0.056
Sulfur Oxides		2.0	1.97E-03	17	0.009
Carbon Monoxide (CO)		7.5	7.38E-03	65	0.032
TOC [3]		1.0	9.84E-04	9	0.004

Notes:

[1] Source AP 42 Table 1.5-1, July 2008

[2] PM emission factor is assumed to equal PM_{10} and $PM_{2.5}$

[3] TOC is assumed to equal VOC.

Greenhouse Gase Emissions						
Green House Gases	**EF (Propane) kg/MMBtu**	**HHV**	**Reference**	**Input (gal/yr)**	**Emission Rate[1,2,3] (metric ton/yr)**	**(ton/year)**
CO_2	61.46	0.091	40 CFR 98 Subpart C Equation C-1 Tier 1	8,616	48.19	53.12
N_2O	6.0E-04	0.138	40 CFR 98 Subpart C Equation C-8 (Tiers 1 & 3)	8,616	0.0007	0.0008
CH_4	3.0E-03	0.138	40 CFR 98 Subpart C Equation C-8 (Tiers 1 & 3)	8,616	0.0036	0.0039
CO2e			40 CFR 98 Part A		48.49	53.45

[1]Eqn C-1: $CO_2 = 1 \times 10^{-3} \times Fuel \times HHV \times EF$

Fuel = Volume of fuel combusted per year, (gal/Year)

EF = Fuel-specific default CO_2 emission factor for natural gas, from Table C-1 of 40 CFR Part 98 Subpart C (kg CO_2/MMBTU)

HHV = Default high heat value of the fuel, from Table C-1 of 40 CFR Part 98 Subpart C (MMBTU/SCF)

1×10^{-3} = Conversion Factor from Kilograms to Metric Tons

[2]Eqn C-8: CH_4 or $N_2O = 1 \times 10^{-3} \times Fuel \times HHV \times EF$

Fuel = Volume of fuel combusted per year, (gal/Year)

EF = Fuel-specific default CH_4 or N_2O emission factor for natural gas, from Table C-2 of 40 CFR Part 98 Subpart C (kg CH_4 or N_2O/MMBTU)

HHV = Default high heat value of the fuel, from Table C-1 of 40 CFR Part 98 Subpart C (MMBTU/SCF)

1×10^{-3} = Conversion Factor from Kilograms to Metric Tons

[3]CO_2e = (GWP CO_2 x CO_2 metric ton/yr) + (GWP CH4 x CH4 metric ton/yr) + (GWP N_2O x N_2O metric ton/yr)

Global Warming Potential (GWP) for Selected GHG - 40 CFR 98 Subpart A, Table A-1

GWP CO_2 =	1.00
GWP CH_4 =	25.00
GWP N_2O =	298.00

Table 11. Lennox Heater 195,000 BTU

Manufacturer	**Lennox**
Model No.	**LF24-200A-6**
Fuel Type	Propane
Maximum Heat Input Rate (BTU)	195000
Maximum Hours of Operation	8,760
Heat value of Fuel (Btu/gal)	91,500
Fuel use (gal/hr)	2.13
Fuel use (gal/yr)	18,669

91.5 x 10^6 BTU / 10^3 Gal propane (AP 42 Table 1-5.1, 7/2008)
Assume sulfur content of propane = 0.2 g/100 ft^3 propane (Compilation of Air Pollutant Emission Factors, Volume I,Section 1.5)

			Uncontrolled Potential to Emit		
Pollutant	**CAS No.**	**Emission Factor[1] (lb/10^3 Gal)**	**Emission Rate (lb/hr)**	**Emission Rate (lb/yr)**	**Emission Rate (ton/yr)**
Total Particulate Matter [2]		0.7	1.49E-03	13	0.007
PM_{10} [2]		0.7	1.49E-03	13	0.007
$PM_{2.5}$ [2]		0.7	1.49E-03	13	0.007
Nitrogen Oxides (NOx)		13.0	2.77E-02	243	0.121
Sulfur Oxides		2.0	4.26E-03	37	0.019
Carbon Monoxide (CO)		7.5	1.60E-02	140	0.070
TOC [3]		1.0	2.13E-03	19	0.009

Notes:
[1] Source AP 42 Table 1.5-1, July 2008
[2] PM emission factor is assumed to equal PM_{10} and $PM_{2.5}$
[3] TOC is assumed to equal VOC.

Greenhouse Gase Emissions						
Green House Gases	**EF (Propane) kg/MMBtu**	**HHV**	**Reference**	**Input (gal/yr)**	**Emission Rate[1,2,3] (metric ton/yr)**	**(ton/year)**
CO_2	61.46	0.091	40 CFR 98 Subpart C Equation C-1 Tier 1	18,669	104.41	115.09
N_2O	6.0E-04	0.138	40 CFR 98 Subpart C Equation C-8 (Tiers 1 & 3)	18,669	0.0015	0.0017
CH_4	3.0E-03	0.138	40 CFR 98 Subpart C Equation C-8 (Tiers 1 & 3)	18,669	0.0077	0.0085
CO2e			40 CFR 98 Part A		105.07	115.81

[1]Eqn C-1: CO_2 = 1 x 10^{-3} x Fuel x HHV x EF
Fuel = Volume of fuel combusted per year, (gal/Year)
EF = Fuel-specific default CO_2 emission factor for natural gas, from Table C-1 of 40 CFR Part 98 Subpart C (kg CO_2/MMBTU)
HHV = Default high heat value of the fuel, from Table C-1 of 40 CFR Part 98 Subpart C (MMBTU/SCF)
1 x 10^{-3} = Conversion Factor from Kilograms to Metric Tons

[2]Eqn C-8: CH_4 or N_2O = 1 x 10^{-3} x Fuel x HHV x EF
Fuel = Volume of fuel combusted per year, (gal/Year)
EF = Fuel-specific default CH_4 or N_2O emission factor for natural gas, from Table C-2 of 40 CFR Part 98 Subpart C (kg CH_4 or N_2O/MMBTU)
HHV = Default high heat value of the fuel, from Table C-1 of 40 CFR Part 98 Subpart C (MMBTU/SCF)
1 x 10^{-3} = Conversion Factor from Kilograms to Metric Tons

[3]CO_2e = (GWP CO_2 x CO_2 metric ton/yr) + (GWP CH4 x CH4 metric ton/yr) + (GWP N_2O x N_2O metric ton/yr)
Global Warming Potential (GWP) for Selected GHG - 40 CFR 98 Subpart A, Table A-1

GWP CO_2 =	1.00
GWP CH_4 =	25.00
GWP N_2O =	298.00

Table 12. York HVAC 45,000 BTU

Manufacturer	**York**
Model No.	**DZNY024N02 606NXA**
Fuel Type	Propane
Maximum Heat Input Rate (BTU)	45000
Maximum Hours of Operation	8,760
Heat value of Fuel (Btu/gal)	91,500
Fuel use (gal/hr)	0.49
Fuel use (gal/yr)	4,308

91.5 x 10^6 BTU / 10^3 Gal propane (AP 42 Table 1-5.1, 7/2008)
Assume sulfur content of propane = 0.2 g/100 ft^3 propane (Compilation of Air Pollutant Emission Factors, Volume I,Section 1.5)

			Uncontrolled Potential to Emit		
Pollutant	**CAS No.**	**Emission Factor[1] (lb/10^3 Gal)**	**Emission Rate (lb/hr)**	**Emission Rate (lb/yr)**	**Emission Rate (ton/yr)**
Total Particulate Matter [2]		0.7	3.44E-04	3	0.002
PM_{10} [2]		0.7	3.44E-04	3	0.002
$PM_{2.5}$ [2]		0.7	3.44E-04	3	0.002
Nitrogen Oxides (NOx)		13.0	6.39E-03	56	0.028
Sulfur Oxides		2.0	9.84E-04	9	0.004
Carbon Monoxide (CO)		7.5	3.69E-03	32	0.016
TOC [3]		1.0	4.92E-04	4	0.002

Notes:
[1] Source AP 42 Table 1.5-1, July 2008
[2] PM emission factor is assumed to equal PM_{10} and $PM_{2.5}$
[3] TOC is assumed to equal VOC.

Greenhouse Gase Emissions						
Green House Gases	**EF (Propane) kg/MMBtu**	**HHV**	**Reference**	**Input (gal/yr)**	**Emission Rate[1,2,3] (metric ton/yr)**	**(ton/year)**
CO_2	61.46	0.091	40 CFR 98 Subpart C Equation C-1 Tier 1	4,308	24.10	26.56
N_2O	6.0E-04	0.138	40 CFR 98 Subpart C Equation C-8 (Tiers 1 & 3)	4,308	0.0004	0.0004
CH_4	3.0E-03	0.138	40 CFR 98 Subpart C Equation C-8 (Tiers 1 & 3)	4,308	0.0018	0.0020
CO2e			40 CFR 98 Part A		24.25	26.73

[1]Eqn C-1: $CO_2 = 1 \times 10^{-3} \times$ Fuel x HHV x EF
Fuel = Volume of fuel combusted per year, (gal/Year)
EF = Fuel-specific default CO_2 emission factor for natural gas, from Table C-1 of 40 CFR Part 98 Subpart C (kg CO_2/MMBTU)
HHV = Default high heat value of the fuel, from Table C-1 of 40 CFR Part 98 Subpart C (MMBTU/SCF)
1×10^{-3} = Conversion Factor from Kilograms to Metric Tons

[2]Eqn C-8: CH_4 or $N_2O = 1 \times 10^{-3} \times$ Fuel x HHV x EF
Fuel = Volume of fuel combusted per year, (gal/Year)
EF = Fuel-specific default CH_4 or N_2O emission factor for natural gas, from Table C-2 of 40 CFR Part 98 Subpart C (kg CH_4 or N_2O/MMBTU)
HHV = Default high heat value of the fuel, from Table C-1 of 40 CFR Part 98 Subpart C (MMBTU/SCF)
1×10^{-3} = Conversion Factor from Kilograms to Metric Tons

[3]CO_2e = (GWP CO_2 x CO_2 metric ton/yr) + (GWP CH4 x CH4 metric ton/yr) + (GWP N_2O x N_2O metric ton/yr)
Global Warming Potential (GWP) for Selected GHG - 40 CFR 98 Subpart A, Table A-1

GWP CO_2 =	1.00
GWP CH_4 =	25.00
GWP N_2O =	298.00

Table 13. Cambridge HVAC 353,000 BTU

Manufacturer	**Cambridge**
Model No.	**S400**
Fuel Type	Propane
Maximum Heat Input Rate (BTU)	353000
Maximum Hours of Operation	8,760
Heat value of Fuel (Btu/gal)	91,500
Fuel use (gal/hr)	3.86
Fuel use (gal/yr)	33,795

91.5 x 10^6 BTU / 10^3 Gal propane (AP 42 Table 1-5.1, 7/2008)
Assume sulfur content of propane = 0.2 g/100 ft^3 propane (Compilation of Air Pollutant Emission Factors, Volume I,Section 1.5)

			Uncontrolled Potential to Emit		
Pollutant	**CAS No.**	**Emission Factor[1] (lb/10^3 Gal)**	**Emission Rate (lb/hr)**	**Emission Rate (lb/yr)**	**Emission Rate (ton/yr)**
Total Particulate Matter [2]		0.7	2.70E-03	24	0.012
PM_{10} [2]		0.7	2.70E-03	24	0.012
$PM_{2.5}$ [2]		0.7	2.70E-03	24	0.012
Nitrogen Oxides (NOx)		13.0	5.02E-02	439	0.220
Sulfur Oxides		2.0	7.72E-03	68	0.034
Carbon Monoxide (CO)		7.5	2.89E-02	253	0.127
TOC [3]		1.0	3.86E-03	34	0.017

Notes:
[1] Source AP 42 Table 1.5-1, July 2008
[2] PM emission factor is assumed to equal PM_{10} and $PM_{2.5}$
[3] TOC is assumed to equal VOC.

Greenhouse Gase Emissions						
Green House Gases	**EF (Propane) kg/MMBtu**	**HHV**	**Reference**	**Input (gal/yr)**	**Emission Rate[1,2,3] (metric ton/yr)**	**(ton/year)**
CO_2	61.46	0.091	40 CFR 98 Subpart C Equation C-1 Tier 1	33,795	189.01	208.35
N_2O	6.0E-04	0.138	40 CFR 98 Subpart C Equation C-8 (Tiers 1 & 3)	33,795	0.0028	0.0031
CH_4	3.0E-03	0.138	40 CFR 98 Subpart C Equation C-8 (Tiers 1 & 3)	33,795	0.0140	0.0154
CO2e			40 CFR 98 Part A		190.20	209.65

[1]Eqn C-1: $CO_2 = 1 \times 10^{-3} \times$ Fuel x HHV x EF
Fuel = Volume of fuel combusted per year, (gal/Year)
EF = Fuel-specific default CO_2 emission factor for natural gas, from Table C-1 of 40 CFR Part 98 Subpart C (kg CO_2/MMBTU)
HHV = Default high heat value of the fuel, from Table C-1 of 40 CFR Part 98 Subpart C (MMBTU/SCF)
1×10^{-3} = Conversion Factor from Kilograms to Metric Tons

[2]Eqn C-8: CH_4 or $N_2O = 1 \times 10^{-3} \times$ Fuel x HHV x EF
Fuel = Volume of fuel combusted per year, (gal/Year)
EF = Fuel-specific default CH_4 or N_2O emission factor for natural gas, from Table C-2 of 40 CFR Part 98 Subpart C (kg CH_4 or N_2O/MMBTU)
HHV = Default high heat value of the fuel, from Table C-1 of 40 CFR Part 98 Subpart C (MMBTU/SCF)
1×10^{-3} = Conversion Factor from Kilograms to Metric Tons

[3]CO_2e = (GWP CO_2 x CO_2 metric ton/yr) + (GWP CH4 x CH4 metric ton/yr) + (GWP N_2O x N_2O metric ton/yr)
Global Warming Potential (GWP) for Selected GHG - 40 CFR 98 Subpart A, Table A-1

GWP CO_2 =	1.00
GWP CH_4 =	25.00
GWP N_2O =	298.00

Table 14. Carrier HVAC 72,000 BTU

Manufacturer	**Carrier**
Model No.	**48TJE004**
Fuel Type	Propane
Maximum Heat Input Rate (BTU)	72000
Maximum Hours of Operation	8,760
Heat value of Fuel (Btu/gal)	91,500
Fuel use (gal/hr)	0.79
Fuel use (gal/yr)	6,893

91.5 x 10^6 BTU / 10^3 Gal propane (AP 42 Table 1-5.1, 7/2008)
Assume sulfur content of propane = 0.2 g/100 ft^3 propane (Compilation of Air Pollutant Emission Factors, Volume I,Section 1.5)

			Uncontrolled Potential to Emit		
Pollutant	**CAS No.**	**Emission Factor[1] (lb/10^3 Gal)**	**Emission Rate (lb/hr)**	**Emission Rate (lb/yr)**	**Emission Rate (ton/yr)**
Total Particulate Matter [2]		0.7	5.51E-04	5	0.002
PM_{10} [2]		0.7	5.51E-04	5	0.002
$PM_{2.5}$ [2]		0.7	5.51E-04	5	0.002
Nitrogen Oxides (NOx)		13.0	1.02E-02	90	0.045
Sulfur Oxides		2.0	1.57E-03	14	0.007
Carbon Monoxide (CO)		7.5	5.90E-03	52	0.026
TOC [3]		1.0	7.87E-04	7	0.003

Notes:
[1] Source AP 42 Table 1.5-1, July 2008
[2] PM emission factor is assumed to equal PM_{10} and $PM_{2.5}$
[3] TOC is assumed to equal VOC.

Greenhouse Gase Emissions						
Green House Gases	**EF (Propane) kg/MMBtu**	**HHV**	**Reference**	**Input (gal/yr)**	**Emission Rate[1,2,3] (metric ton/yr)**	**(ton/year)**
CO_2	61.46	0.091	40 CFR 98 Subpart C Equation C-1 Tier 1	6,893	38.55	42.50
N_2O	6.0E-04	0.138	40 CFR 98 Subpart C Equation C-8 (Tiers 1 & 3)	6,893	0.0006	0.0006
CH_4	3.0E-03	0.138	40 CFR 98 Subpart C Equation C-8 (Tiers 1 & 3)	6,893	0.0029	0.0031
CO2e			40 CFR 98 Part A		38.79	42.76

[1]Eqn C-1: $CO_2 = 1 \times 10^{-3} \times$ Fuel x HHV x EF
Fuel = Volume of fuel combusted per year, (gal/Year)
EF = Fuel-specific default CO_2 emission factor for natural gas, from Table C-1 of 40 CFR Part 98 Subpart C (kg CO_2/MMBTU)
HHV = Default high heat value of the fuel, from Table C-1 of 40 CFR Part 98 Subpart C (MMBTU/SCF)
1×10^{-3} = Conversion Factor from Kilograms to Metric Tons

[2]Eqn C-8: CH_4 or $N_2O = 1 \times 10^{-3} \times$ Fuel x HHV x EF
Fuel = Volume of fuel combusted per year, (gal/Year)
EF = Fuel-specific default CH_4 or N_2O emission factor for natural gas, from Table C-2 of 40 CFR Part 98 Subpart C (kg CH_4 or N_2O/MMBTU)
HHV = Default high heat value of the fuel, from Table C-1 of 40 CFR Part 98 Subpart C (MMBTU/SCF)
1×10^{-3} = Conversion Factor from Kilograms to Metric Tons

[3]CO_2e = (GWP CO_2 x CO_2 metric ton/yr) + (GWP CH4 x CH4 metric ton/yr) + (GWP N_2O x N_2O metric ton/yr)
Global Warming Potential (GWP) for Selected GHG - 40 CFR 98 Subpart A, Table A-1

GWP CO_2 =	1.00
GWP CH_4 =	25.00
GWP N_2O =	298.00

Table 15. Carrier HVAC 115,000 BTU

Manufacturer	**Carrier**
Model No.	**48TFE005**
Fuel Type	Propane
Maximum Heat Input Rate (BTU)	115000
Maximum Hours of Operation	8,760
Heat value of Fuel (Btu/gal)	91,500
Fuel use (gal/hr)	1.26
Fuel use (gal/yr)	11,010

91.5 x 10^6 BTU / 10^3 Gal propane (AP 42 Table 1-5.1, 7/2008)
Assume sulfur content of propane = 0.2 g/100 ft^3 propane (Compilation of Air Pollutant Emission Factors, Volume I,Section 1.5)

			Uncontrolled Potential to Emit		
Pollutant	**CAS No.**	**Emission Factor[1] (lb/10^3 Gal)**	**Emission Rate (lb/hr)**	**Emission Rate (lb/yr)**	**Emission Rate (ton/yr)**
Total Particulate Matter [2]		0.7	8.80E-04	8	0.004
PM_{10} [2]		0.7	8.80E-04	8	0.004
$PM_{2.5}$ [2]		0.7	8.80E-04	8	0.004
Nitrogen Oxides (NOx)		13.0	1.63E-02	143	0.072
Sulfur Oxides		2.0	2.51E-03	22	0.011
Carbon Monoxide (CO)		7.5	9.43E-03	83	0.041
TOC [3]		1.0	1.26E-03	11	0.006

Notes:
[1] Source AP 42 Table 1.5-1, July 2008
[2] PM emission factor is assumed to equal PM_{10} and $PM_{2.5}$
[3] TOC is assumed to equal VOC.

Greenhouse Gase Emissions						
Green House Gases	**EF (Propane) kg/MMBtu**	**HHV**	**Reference**	**Input (gal/yr)**	**Emission Rate[1,2,3] (metric ton/yr)**	**(ton/year)**
CO_2	61.46	0.091	40 CFR 98 Subpart C Equation C-1 Tier 1	11,010	61.58	67.88
N_2O	6.0E-04	0.138	40 CFR 98 Subpart C Equation C-8 (Tiers 1 & 3)	11,010	0.0009	0.0010
CH_4	3.0E-03	0.138	40 CFR 98 Subpart C Equation C-8 (Tiers 1 & 3)	11,010	0.0046	0.0050
CO2e			40 CFR 98 Part A		61.96	68.30

[1]Eqn C-1: CO_2 = 1 x 10^{-3} x Fuel x HHV x EF
Fuel = Volume of fuel combusted per year, (gal/Year)
EF = Fuel-specific default CO_2 emission factor for natural gas, from Table C-1 of 40 CFR Part 98 Subpart C (kg CO_2/MMBTU)
HHV = Default high heat value of the fuel, from Table C-1 of 40 CFR Part 98 Subpart C (MMBTU/SCF)
1 x 10^{-3} = Conversion Factor from Kilograms to Metric Tons

[2]Eqn C-8: CH_4 or N_2O = 1 x 10^{-3} x Fuel x HHV x EF
Fuel = Volume of fuel combusted per year, (gal/Year)
EF = Fuel-specific default CH_4 or N_2O emission factor for natural gas, from Table C-2 of 40 CFR Part 98 Subpart C (kg CH_4 or N_2O/MMBTU)
HHV = Default high heat value of the fuel, from Table C-1 of 40 CFR Part 98 Subpart C (MMBTU/SCF)
1 x 10^{-3} = Conversion Factor from Kilograms to Metric Tons

[3]CO_2e = (GWP CO_2 x CO_2 metric ton/yr) + (GWP CH4 x CH4 metric ton/yr) + (GWP N_2O x N_2O metric ton/yr)
Global Warming Potential (GWP) for Selected GHG - 40 CFR 98 Subpart A, Table A-1

GWP CO_2 =	1.00
GWP CH_4 =	25.00
GWP N_2O =	298.00

Table 16. Carrier HVAC 180,000 BTU

Manufacturer	**Carrier**
Model No.	**48HJE009**
Fuel Type	Propane
Maximum Heat Input Rate (BTU)	180000
Maximum Hours of Operation	8,760
Heat value of Fuel (Btu/gal)	91,500
Fuel use (gal/hr)	1.97
Fuel use (gal/yr)	17,233

91.5 x 10^6 BTU / 10^3 Gal propane (AP 42 Table 1-5.1, 7/2008)
Assume sulfur content of propane = 0.2 g/100 ft^3 propane (Compilation of Air Pollutant Emission Factors, Volume I,Section 1.5)

			Uncontrolled Potential to Emit		
Pollutant	**CAS No.**	**Emission Factor[1] (lb/10^3 Gal)**	**Emission Rate (lb/hr)**	**Emission Rate (lb/yr)**	**Emission Rate (ton/yr)**
Total Particulate Matter [2]		0.7	1.38E-03	12	0.006
PM_{10} [2]		0.7	1.38E-03	12	0.006
$PM_{2.5}$ [2]		0.7	1.38E-03	12	0.006
Nitrogen Oxides (NOx)		13.0	2.56E-02	224	0.112
Sulfur Oxides		2.0	3.93E-03	34	0.017
Carbon Monoxide (CO)		7.5	1.48E-02	129	0.065
TOC [3]		1.0	1.97E-03	17	0.009

Notes:
[1] Source AP 42 Table 1.5-1, July 2008
[2] PM emission factor is assumed to equal PM_{10} and $PM_{2.5}$
[3] TOC is assumed to equal VOC.

Greenhouse Gase Emissions						
Green House Gases	**EF (Propane) kg/MMBtu**	**HHV**	**Reference**	**Input (gal/yr)**	**Emission Rate[1,2,3] (metric ton/yr)**	**(ton/year)**
CO_2	61.46	0.091	40 CFR 98 Subpart C Equation C-1 Tier 1	17,233	96.38	106.24
N_2O	6.0E-04	0.138	40 CFR 98 Subpart C Equation C-8 (Tiers 1 & 3)	17,233	0.0014	0.0016
CH_4	3.0E-03	0.138	40 CFR 98 Subpart C Equation C-8 (Tiers 1 & 3)	17,233	0.0071	0.0079
CO2e			40 CFR 98 Part A		96.98	106.91

[1]Eqn C-1: $CO_2 = 1 \times 10^{-3} \times$ Fuel x HHV x EF
Fuel = Volume of fuel combusted per year, (gal/Year)
EF = Fuel-specific default CO_2 emission factor for natural gas, from Table C-1 of 40 CFR Part 98 Subpart C (kg CO_2/MMBTU)
HHV = Default high heat value of the fuel, from Table C-1 of 40 CFR Part 98 Subpart C (MMBTU/SCF)
1×10^{-3} = Conversion Factor from Kilograms to Metric Tons

[2]Eqn C-8: CH_4 or $N_2O = 1 \times 10^{-3} \times$ Fuel x HHV x EF
Fuel = Volume of fuel combusted per year, (gal/Year)
EF = Fuel-specific default CH_4 or N_2O emission factor for natural gas, from Table C-2 of 40 CFR Part 98 Subpart C (kg CH_4 or N_2O/MMBTU)
HHV = Default high heat value of the fuel, from Table C-1 of 40 CFR Part 98 Subpart C (MMBTU/SCF)
1×10^{-3} = Conversion Factor from Kilograms to Metric Tons

[3]CO_2e = (GWP CO_2 x CO_2 metric ton/yr) + (GWP CH4 x CH4 metric ton/yr) + (GWP N_2O x N_2O metric ton/yr)
Global Warming Potential (GWP) for Selected GHG - 40 CFR 98 Subpart A, Table A-1

GWP CO_2 =	1.00
GWP CH_4 =	25.00
GWP N_2O =	298.00

Appendix F

MSDS Sheets

Material Safety Data Sheet

United Phosphorus, Inc.

NFPA	PPE

Issued Date 22-Aug-2007 **Revision Date** 04-Jan-2011 **Revision Number:** 10

1. PRODUCT AND COMPANY IDENTIFICATION

UPI
630 Freedom Business Center
Suite 402
King of Prussia,PA 19406

Emergency Telephone Number
Chemtrec: (800) 424-9300 (24hrs) or (703) 527-3887
Medical: Rocky Mountain Poison Control Center
(866) 673-6671 (24hrs)

Company Information	Contact Information	Phone Number	Available Hrs
UPI	Customer Service	1-800-438-6071	8:00 am to 5:00 pm EST
	R&D Technical Service	610-878-6100	8:00 am - 5:00 pm (EST)

Product Name WEEVIL-CIDE® Tablets, WEEVIL-CIDE® Pellets
EPA Reg # 70506- 13, 70506-14
Recommended Use Restricted Use Pesticide
The use of his product is STRICTLY PROHIBITED on single family and multi-family residential properties, nursing homes, schools (except athletic fields) , daycare facilities and hospitals.
Product Code 12U-142

2. HAZARDS IDENTIFICATION

Emergency Overview

Aluminum phosphide - reacts with water to produce phosphine gas (PH3).
Ammonium carbamate releases ammonia and carbon dioxide.
Dangerous when wet
Fatal if swallowed or inhaled.
When sealed containers are opened contact with the moisture in the air will cause phosphine gas to be released.
Phosphine is spontaneously flammable in air.

DANGER!

Appearance light grey, to, Greenish.

Physical State Solid. Pellet/tablet.

Odor Garlic like. Pure phosphine gas is odorless but a garlic odor might be detected due to a contaminant. Since odor may not be detected under certain circumstances, the absence of a garlic odor does not mean that phosphine gas is absent..

Potential Health Effects

- Inhalation
- Ingestion
- Skin contact

Acute Effects Phosphine gas is odorless. Accidental ingestion of aluminum phosphide or inhalation of phosphine gas have been reported to produce CNS depression, pulmonary edema, respiratory distress syndrome, cardiac dysrhythmias, seizures, liver injury and renal failure.

Eyes Irritating to eyes.

Skin Irritating to skin.

Inhalation Fatal if inhaled - Do not breathe mist/vapors..

Ingestion Fatal if swallowed - Do not eat, drink, or smoke while handling this product. .

3. COMPOSITION/INFORMATION ON INGREDIENTS

Ingredients Name

Chemical Name	CAS-No	Weight %	OSHA PEL
Ammonium carbamate	1111-78-0	>20	N/A
Aluminum phosphide	20859-73-8	60	N/A

4. FIRST AID MEASURES

Eye Contact Hold eye open and rinse slowly and gently with water for 15 - 20 minutes. Remove contact lenses, if present, after 5 minutes, then continue rinsing eye.

Skin Contact Brush or shake off material. Wash contaminated skin with soapy water in a well ventilated area.
Call poison control center or doctor for treatment advice.

Inhalation

Move person to fresh air.
If person is not breathing, call 911 or an ambulance, then give artifical respiration.
Call a physician or Poison Control Centre immediately

Ingestion

Immediate medical attention is required
Call a physician or Poison Control Center immediately
Do not induce vomiting unless told to do so by a poison control center or doctor
Vomiting may off-gas and release phosphine, which could pose a risk of secondary contamination.
Do not give water (potential additional formation of phosphine) unless authorized by a physician.

Notes to Physician

Aluminim phosphide- This product reacts with moisture from air, water, acids and many other liquids to release hydrogen phosphide (phosphine) gas. Symptoms of severe poisoning may occur within a few hours to several days. Phosphine poisoning may result in; pulmonary edema, liver elevated serum GOT, LDH and alkaline phosphatase, reduced prothrombin, hemmorhage and jaundice, and kidney hematuria and anauria. Pathology is characterized by hypoxia.

5. FIRE-FIGHTING MEASURES

Flammable Explosive Properties

Flash Point

Aluminum phosphide - is not flammable. However, it reacts readily with water to produce hydrogen phosphide (phosphine, PH3) gas which may ignite spontaneously in air concentrations above the LEL of 1.8% v/v.

Autoignition Temperature

Not available

Flammability Limits in Air
Lower 1.8% v/v

Extnguishing Media

Carbon dioxide (CO2), Dry powder, Dry chemical, Sand

Fire/Explosion Hazard

Alphos = Hydrogen phosphide (Phosphine)/air mixtures at concentrations above the lower flammable limit may ignite spontaneously. Ignition of high concentrations of hydrogen phosphide can produce a very energetic reaction. Explosions can occur under these conditions and may cause personal injury. Never allow the build- up of hydrogen phosphide to exceed explosive concentrations. Containers of metal phosphides should be opened in open air and never in a flammable atmosphere. Do not confine spent or partially spent dust from metal phosphide fumigants as slow release of the hydrogen phosphide from these materials may reuslt in formation of an explosive atmosphere. Spontaneous ignition may occur if large quantities of aluminum phosphide are piled in contact with liquid water. Fires containing hydrogen phosphide or metal phosphides will produce phosphoric acid by the following reaction: 2PH3 + 4O2 = H2O + P2O5 = 2H3PO4

Hazardous Combustion Products Phosphine gas.

NFPA **Health 4** **Flammability 4** **Instability 2**

6. ACCIDENTAL RELEASE MEASURES

Personal Precautions Remove all sources of ignition. Ensure adequate ventilation. Avoid contact with skin, eyes and clothing. Use personal protective equipment.

Environmental Precautions Do not flush into surface water or sanitary sewer system. Should not be released into the environment.

Methods for Clean-up Do not use water at any time during clean-up . Wear gloves when handling aluminum phsophide . Damaged aluminum flasks should be transferred to a sound dry metal container and immediately seal and properly label as aluminum phosphide. Follow all label instructions for disposal of residual material and/or empty containers. .

7. HANDLING AND STORAGE

Handling Use of this product is STRICTLY PROHIBITED on single and multifamily residential properties and nursing homes, schools (except athletic fields) daycare facilities and hospitals.

. Keep out of reach of children. Do not eat, drink or smoke when using this product. Remove all sources of ignition. Wear personal protective equipment. It is recommended that the gas-tight, aluminum flask be opened in open air or near a fan, which exhausts outside immediately. Never open in a flammable atmosphere as the product may, although rare, flash. When opening, point container away from the face and body. These precautions will reduce the applicators potential for exposure to hydrogen phosphide (phosphine) gas. Do not expose product to atmospheric moisture any longer than is necessary. .

Storage Store in cool/well-ventilated place. Store in original container. . Keep away from heat and sources of ignition. Do not store in buildings where humans or domestic animals reside..

8. EXPOSURE CONTROLS / PERSONAL PROTECTION

Exposure Guidelines

Chemical Name	ACGIH TLV	OSHA PEL
Aluminum phosphide	1 mg/m³ Respirable fraction.	

Engineering Controls Investigate engineering techniques to reduce exposures. Local mechanical exhaust ventilation is preferred. Consult ACGIH ventilation manual or NFPA Standard 91 for design of exhaust systems. . Use equipment/monitors for the detection of phosphine gas .

Personal Protective Equipment

Eye/face Protection Where there is potential for eye contact have eye flushing equipment available.. Eye contact should be avoided through the use of chemical safety glasses, goggles, or a faceshield selected in regard to exposure potential..

Skin Protection Wear protective gloves/clothing.

Respiratory Protection A NIOSH/MESA approved full face mask with approved canister for phosphine may be employed for concentrations up to 15 ppm. At concentrations above that level, or when concentration is unknown, NIOSH/MESA approved SCBA or equivalent must be worn. .

General Hygiene Considerations

Do not eat, drink or smoke when using this product. Wash hands before breaks and immediately after handling the product. Wear suitable gloves and eye/face protection. Wear respiratory protection. .

9. PHYSICAL AND CHEMICAL PROPERTIES

Appearance	light grey to Greenish	**Odor**	Garlic like Pure phosphine gas is odorless but a garlic odor might be detected due to a contaminant. Since odor may not be detected under certain circumstances, the absence of a garlic odor does not mean that phosphine gas is absent.
Physical State	Solid Pellet/tablet	**pH**	No data available
Boiling Point/Range	Not available	**Melting Point/Range**	Not available
Specific Gravity	2.85	**Solubility**	Insoluble
Evaporation Rate	Not available	**Vapor Pressure**	Not available
Vapor Density	Not available	**VOC Content**	Not available
Viscosity	Not available	**Molecular Weight**	No data available
Bulk Density	No data available	**Percent Solids**	Not available
Percent Volatiles	Not available		

10. STABILITY AND REACTIVITY

Stability This product is stable to most chemical reactions except for hydrolysis. A component of this product, aluminum phosphide, reacts with moisture from the air, water, acids and many other liquids to produce toxic and flammable hydrogen phosphine gas. Pure hydrogen phosphide (phosphine) gas is practically insoluble in water, fats and oils and is stable at normal fumigation temperatures.

Conditions to Avoid Exposure to moisture. Protect from water.

Incompatible Materials

oxidizers. Water - moisture. Hydrogen phosphide may react with certain metals (gold, silver, brass, other precious metals and their alloys) and cause corrosion especially at high temperatures and relative humdities. Small electric detectors, brass sprinkler heads, batteries and battery chargers, forklifts, temperature monitoring systems, electrical switch gear, communication devices, computers, calculators, watches and other electronic equipments shoul dbe protected or removed before fumigation. .

Hazardous Decomposition Products

Phosphine gas.

Possibility of Hazardous Polymerization

Hazardous polymerisation does not occur

11. TOXICOLOGICAL INFORMATION

Acute Toxicity

Component Information

Aluminum phosphide -
Acute oral LD50 = 11.5 mg/kg
Acute dermal LD50 = >5,000 mg/kg (1 hr exposure)
Sensitization = Not a sensitizer

Hydrogen phosphide (phosphine) gas -
Inhalation = LC50 190 ppm (1 hour)

Chronic Toxicity

Carcinogenicity

Aluminum phosphide:
Chronic effects = Not expected to produce target organ effects
Mutagenicity = No data
Carcinogenicity = Not classified as a carcinogen by IARC, OSHA, or NTP
Reproductive and Developmental Effects = Not expected to produce reproductive or developmental effects.

Hydrogen phosphide (phosphine) gas -
Chronic effects = In a 2-year study, rats were exposed to 48-90 g/m^3 of feed and no overt systemic toxicity was noted.
Mutagenicity = Increased frequency of cells with structural chromosomal aberrations noted in an invitro cytogenetic assay with Chinese hamster ovary cells.
Carcinogenicity = Not classified as a carcinogen by IARC, OSHA or NTP
Reproductive and developmental effects = Not expected to product reproductive or developmental effects. .

12. ECOLOGICAL INFORMATION

Ecotoxicity

Highly toxic to wildlife. Non-target organisms exposed to phosphine gas in burrows will be killed. .

13. DISPOSAL CONSIDERATIONS

Waste Disposal Method

Pesticide wastes are acutely hazardous. Improper disposal of excess pesticide or rinsate is a violation of Federal law. If the wastes cannot be disposed of by use or according to label instructions, contact your State Pesticide or Environmental Control Agency, or the Hazardous Waste representative at the nearest EPA Regional Office for guidance. . Follow label for proper disposal instructions. .

Contaminated Packaging

Non refillable container. Do not reuse this container. . Trple rinse (or equivalent) promptly after emptying. . Clean container promptly after emptying. Triple rinse as follows: Empty the remaining contents into application equipment or a mix tank and drain for 10 seconds after the flow begins to drip. Fill container 1/4 full with water and recap. Shake for 10 seconds. Pour rinsate into application requipment or a mix tank or store rinsate for later use or disposal. Drain for 10 seconds after the flow begins to drip. Repeat this procedure two more times. The offer for recycling if avilable or puncture and dipose of in a sanitary landfill, or by incineration, or, if allowed by state and local authorities, by burning. If burned, stay out of smoke. . It is permissible to remove lids and expose empty flasks to atmospheric conditions until te residue is reacted. Then puncture and dispose of in a sanitary landfill or other approved site, or by other procedures approved by state and local authorities.

If properly exposed the residual dust remaining after afumigation with the tablets will be a grayish white powder and contain only a small amount of unreacted aluminum phosphide. HOWEVER, residual dust from incompletely exposed tablets may require special care. .

14. TRANSPORT INFORMATION

DOT

Aluminum flasks are covered under DOT special permit DOT -SP 13307

Proper Shipping Name	For flasks: when transported by single motor vehicle containing not more than 21 kilograms of aluminum phosphide pesticide and stowed within metal boxes or metal compartments within the motor vehicle:
	Aluminum phosphide pesticides
Hazard Class	6.1
UN-No	UN3048
Packing Group	PG I
Reportable Quantity (RQ):	100 lbs
Special Provisions	For shipments not covered under DOT 13307 the following description must be used: UN1397, Aluminum phosphide mixture, 4.3,(6.1), PG I

ICAO

UN-No	1397
Proper Shipping Name	Aluminum phosphide
Hazard Class	4.3
Subsidiary Class	6.1
Packing Group	PG I
Description	Forbidden by passenger aircraft

IATA

UN-No	1397
Proper Shipping Name	Aluminum phosphide
Hazard Class	4.3
Subsidiary Class	6.1

14. TRANSPORT INFORMATION

Packing Group	PG I
ERG Code	4PW

IMDG/IMO

Proper Shipping Name	Aluminum phosphide
Hazard Class	4.3
Subsidiary Class	6.1
UN-No	1397
Packing Group	PG I
EmS No.	F-G, S-N

15. REGULATORY INFORMATION

International Inventories

Ammonium carbamate

DSL	Listed
EINECS/ELINCS	Listed
ENCS	Listed
CHINA	Listed
KECL	Listed

Aluminum phosphide

NDSL	Listed
EINECS/ELINCS	Listed 31 Jan 2014
CHINA	Listed
KECL	Listed

USA

Federal Regulations

SARA 313
Y

Chemical Name	CAS-No	Weight %
Ammonium carbamate	1111-78-0	>20
Aluminum phosphide	20859-73-8	60

SARA 311/312 Hazardous Categorization

Chronic Health Hazard	No
Acute Health Hazard	Yes
Fire Hazard	Yes
Sudden Release of Pressure Hazard	No
Reactive Hazard	Yes

Clean Water Act

Chemical Name	CWA - Reportable Quantities	CWA - Toxic Pollutants	CWA - Priority Pollutants	CWA - Hazardous Substances
Ammonium carbamate	5000 lbs			Listed.

Clean Air Act, Section 112 Hazardous Air Pollutants (HAPs) (see 40 CFR 61)
This product does not contain any HAPs.

CERCLA

Chemical Name	RQ
Ammonium carbamate	Listed.
Aluminum phosphide	Listed.

Chemical Name	CERCLA EHS RQs
Aluminum phosphide	100 lbs

RCRA

Chemical Name	RCRA - D Series Wastes	RCRA - P Series Wastes	RCRA - U Series Wastes
Aluminum phosphide		P006	

Pesticide Information

State Regulations

California Proposition 65
This product does not contain any Proposition 65 chemicals.

State Right-to-Know

Chemical Name	Massachusetts	New Jersey	Pennsylvania	Illinois	Rhode Island
Ammonium carbamate	Listed.	Substance no. 0091 Listed.	Listed.	Listed.	
Aluminum phosphide	Listed.	Substance no. 0063 Listed.	Listed.	Listed.	

International Regulations

Mexico - Grade Not available

Canada

This product has been classified in accordance with the hazard criteria of the Controlled Products Regulations (CPR) and the MSDS contains all the information required by the CPR.

WHMIS Hazard Class
Not determined

16. OTHER INFORMATION

Revision Date 04-Jan-2011

Revision Summary
Update section 8 Update section 13

UPI, Inc. believes that the information and recommendations container herein (including data and statements) are accurate as of the date hereof. NO WARRANTY OF FITNESS FOR ANY PARTICULAR PURPOSE, WARRANTY OF MERCHANTABILITY, OR ANY OTHER WARRANTY, EXPRESSED OR IMPLIED, IS MADE CONCERNING THE INFORMATION PROVIDED HEREIN. The information provided herein relates only to the specific product designated and may not be valid where such product is used in combination with other materials or in any process. Further, since the conditions and methods of use are beyond the control of UPI, Inc. UPI, Inc. expressly disclaims any and all liability as to any results obtained or arising from any use of the product or reliance on such information.

End of MSDS

Appendix G

Modeling Protocol

COPYRIGHT 2015 BY CH2M HILL, INC. • COMPANY CONFIDENTIAL

Air Dispersion Modeling Protocol

Seed Treatment Processing Plant, Parma, Idaho

Prepared for:

Nunhems, USA

Submitted to:

Idaho Department of Environmental Quality

September 2014

Prepared By:

CH2MHILL

1.0 Project Background

Nunhems USA (Nunhems) operates a Carrot and Onion Seed Treatment Processing facility located at 1200 Anderson Corner Road, Parma, Idaho (facility). Nunhems was issued a Permit Denial letter on June 28, 2013 by the Idaho Department of Environmental Quality (IDEQ) and is pursuing development of a new Permit-to-Construct (PTC) application. A copy of the initial IDEQ PTC application denial letter is provided in Appendix A.

On October 19, 2012, Nunhems was issued a Consent Order for operating without an air quality PTC by the IDEQ. Nunhems is currently working with the IDEQ to prepare a new PTC application and resolve the issues associated with the Consent Order.

In July 2013, Nunhems contracted with CH2M HILL to prepare a new PTC application for the Parma facility. CH2M HILL prepared a modeling protocol which to correct the previous modeling inconsistencies through facility-wide modeling and includes over 50 new emission sources.

In August 2013, CH2M HILL submitted an initial modeling protocol to IDEQ for review. In December 2013, CH2M HILL submitted manufacturer information in order to verify the propane emission source stack parameters. It is our understanding that the protocol was re-prioritized based on IDEQ workload.

1.1 New IDEQ Policies

There are two new IDEQ policies that are now in effect which should benefit the Nunhems Parma facility.

These two policies include:

1) Modeling for a new or existing unpermitted facility or modification is not required for any criteria pollutant with controlled emissions less than 10% of the significant emissions rate for that pollutant. The requirement to demonstrate that the uncontrolled emissions are less than 100 tons per year has been dropped (i.e. Section 3.1 of the *State of Idaho Guideline for Performing Air Quality Impact Analyses*.

2) Modeling for 1-hr NO_2 is no longer required for emergency engine generators that will operate less than 100 hours per year for routine testing and maintenance (i.e. Appendix A of the *State of Idaho Guideline for Performing Air Quality Impact Analyses*.

1.2 Modeling Protocol Resubmittal

CH2M HILL has prepared an updated modeling protocol that incorporates the two IDEQ policies stated above. Nunhems maintains eight Carothers dust collectors, six FARR cartridge dust collectors, one Murphy Rodgers baghouse, and two Herding filtration units to control particulate matter emissions. Controlled potential emission estimates have been prepared for particulate matter emissions (PM_{10} and $PM_{2.5}$). The remaining emission sources are uncontrolled and consist of process heaters, building heaters, and emergency generators. The process heaters and building heaters use propane exclusively as the primary fuel source.

Nunhems maintains three emergency backup generators for emergency power. Each generator uses ultra low sulfur diesel fuel and operates less than 100 hours per year for routine testing and maintenance. Therefore, Nunhems is requesting to exclude 1-hr NO_2 modeling for the 3 emergency generators.

An air quality impact analysis will be performed in support of this PTC modification required under IDAPA 58.01.01.200. Idaho regulations require a facility applying for a PTC modification to demonstrate compliance with the NAAQS.

This air dispersion modeling protocol is being submitted to the IDEQ on behalf of Nunhems. This document summarizes the modeling methodology that will be used to evaluate the facility's impacts to air quality with respect to criteria and state toxic air pollutant (TAPs) emissions. It has been prepared based on the U.S. Environmental Protection Agency (EPA) *Guidelines on Air Quality Models* (GAQM), and the *State of Idaho Guideline for Performing Air Quality impact Analyses* (ID AQ-01, September, 2013).

2.0 Project Description

The Nunhems facility is located approximately 6 miles north of Parma, Idaho. There are a total of five processing stages; warehousing, seed conditioning, seed enhancement, seed treatment, and packaging and shipping.

Warehousing – Once seeds are received at the facility, they are inspected to determine if the product is "dirt seed" or "clean seed." Both clean and dirt-seed are sampled and analyzed to determine trueness to type, purity, vigor, seed health and seed count. Seeds are then analyzed for moisture content and dried, if needed, to bring the product to long term storage standards. A fumigation process is also performed, as needed, in order to eliminate infestation of boll weevils and other insects that may damage the seeds.

Seed Conditioning – Seed conditioning is also referred to as seed cleaning or seed milling. It's the process of extracting the clean, pure seed from the plant parts that came with the seed from the field. Product considered "dirt seed" is received and stored within an adjacent building before it is conditioned within the conditioning building. Once received in the conditioning building, dirt seed goes through a "scalping" or pre-cleaning process where product is run across an air screen cleaner to remove the largest and smallest plant parts from the seed. Carrot seed goes through a separate process known as "brushing" where the awns or hairs of the seed are removed. After scalping and/or brushing, the seed is sent through the conditioning lines where they are further cleaned, density separated, color sorted and sized. If the quality and health standards are met, seed is moved to acclimated seed storage. Based upon the sales needs, Nunhems decides whether the product is: 1) enhanced, 2) treated, 3) packaged for stock, or 4) packaged for sale and shipment.

Seed Enhancement – During the seed enhancement process, seeds are 1) disinfected using a 1-percent chlorine solution, 2) primed (or pre-germinated) 3) sorted, and 4)

pelleted (where a polymer and filler is added to the seed to create a more uniform shape).

Seed Treatment – After seed enhancement, seeds are sent for treatment where a thin layer of water-based polymer is applied tin order to encapsulate the seed and hold the pesticide next to the seed.

Packaging and Shipment – Logistics determines which type of container the product will be packaged in (pails, cans or pouches), and whether it will be packed for stock or for sale/distribution.

A process flow diagram is provided in Figure 1.

A site plan showing current layout of the facility is included in Figure 2.

The facility sources include:

- Three emergency backup generators (point sources). Each emergency generator operates less than 100 hours per year for routine testing and maintenance.

  CATGEN 1
  - Cat C9 250 kW diesel powered generator
  - Ultra low sulfur diesel (ULSD), 0.0015% sulfur content
  - For testing purposes, will operate up to 30 minutes a month

  CUMGEN 2
  - Cummins 1,612 kW diesel powered generator
  - ULSD, 0.0015% sulfur content
  - For testing purposes, will operate up to 30 minutes a month

  GENGEN 3
  - Generac 80 kW diesel powered generator
  - ULSD, 0.0015% sulfur content
  - For testing purposes, will operate up to 30 minutes a month

- Eight dust collectors (point sources)

  Dust collector 01 and 02 (DC01 and DC02)
  - Carothers and Sons manufacturer
  - 99.995% control efficiency
  - 0.0007 grains per dry standard cubic feet (g/dscf)
  - 34,900 cubic feet per minute (cfm) exhaust flow rate

  Dust collector 03 (DC03)
  - Carothers and Sons manufacturer
  - 99.995% control efficiency
  - 0.0007 g/dscf
  - 35,000 cfm exhaust flow rate

  Dust collector 04 (DC04)
  - Carothers and Sons manufacturer

- 99.995% control efficiency
- 0.0007 g/dscf
- 12,800 cfm exhaust flow rate

Dust collector 05 (DC05)

- Carothers and Sons manufacturer
- 99.995% control efficiency
- 0.0007 g/dscf
- 20,000 cfm exhaust flow rate

Dust collector 06 (DC06)

- Carothers and Sons manufacturer
- 99.995% control efficiency
- 0.0007 g/dscf
- 32,500 cfm exhaust flow rate

Dust collector 07 (DC07)

- Carothers and Sons manufacturer
- 99.995% control efficiency
- 0.0007 g/dscf
- 6,800 cfm exhaust flow rate

Dust collector 08 (DC08)

- Carothers and Sons manufacturer
- 99.995% control efficiency
- 0.0007 g/dscf
- 25,000 cfm exhaust flow rate

- Six FARR cartridge dust collectors (point sources)

FARR01 and FARR02

- Camfil FARR Air Pollution Control
- Seed treatment (film coating)
- 0.002 g/dscf (manufacturer guarantee)
- 99.99% efficient on 0.5 micron particles and larger

FARR03 and FARR04

- Camfil FARR Air Pollution Control
- Seed enhancement (pelleting)
- 0.002 g/dscf (manufacturer guarantee)
- 99.99% efficient on 0.5 micron particles and larger

FARR05 and FARR06

- Camfil FARR Air Pollution Control
- Warehousing (bulk unloading)
- 0.002 g/dscf (manufacturer guarantee)
- 99.99% efficient on 0.5 micron particles and larger

- One baghouse (point source)

Murphy Rodgers Baghouse (MRBH01)

- Model MRM-12-4D
- Seed enhancement
- 3,900 cfm at 8-inch water column
- 352 ft^2 filter area
- 99.9% efficient on particles of 1 micron or larger

- Two Herding Filtration, LLC units (point source)

HERD01

- Model P-1899 HSL
- Seed enhancement (powder/blending)
- 4,700 cfm
- 99.97% efficient 0.3 micron

HERD02

- Model P-2112 Delta Sys
- Seed enhancement (pelleting)
- 23,200 cfm
- 99.97% efficient 0.3 micron

- Two building heaters for Building Q (HEAT1)
  - Propane fired
  - 1,000,000 Btu/hr per unit
  - Dry scale out of onion umbels
  - Volume source

- Four building heaters south of Building L (HEAT2)
  - Propane fired
  - 250,000 Btu/hr per unit
  - Dry scale out of onion umbels
  - Volume source

- Two enclosed seed dryers (DRYER01A and DRYER01B)
  - Building L
  - Propane fired
  - 1,000,000 Btu/hr per unit
  - Point sources

- Seed dryer in Building K (DRYER02)
  - Seed warehousing
  - Propane fired
  - 2,500,000 Btu/hr
  - Point source

- Seed dryer northwest of Building L (DRYER03)
  - Propane fired
  - 2,000,000 Btu/hr

    - Volume source

- Seed dryer in Building L (DRYER04A)
    - Two separate dryers that vent out of a common stack associated with DC03
    - Propane fired
    - 500,000 Btu/hr
    - Point source

- Seed dryer in Building L (DRYER04B)
    - Three separate dryers that vent out of a common stack associated with DC04
    -
    - Propane fired
    - 500,000 Btu/hr
    - Point source

- 58 propane space heaters and HVAC units scattered throughout the facility
    - All propane fuel burning
    - Range in size from 45,000 Btu to 353,000 Btu

Manufacturer specification sheets are provided in Appendix B.

3.0 Emissions

3.1 Source Information

Table 1 shows the stack parameters for the facility-wide sources.

Table 1
Stack Parameters

Point Source (Production)	Stack ID	Easting	Northing	Stack Height (m)	Diameter (m)	Flowrate (acfm)	Velocity (m/s)	Temperature (K)	Notes
Caterpillar Gen	CATGEN	503,760	4,857,808	3.3528	0.1778	2,242.5	42.6	729.76	Vertical, Flapper
Cummins Gen	CUMGEN	504,002.54	4,858,999.4	4.572	0.4064	12,065	43.9	763.7	Vertical, Flapper
Generac Gen	GENGEN	503,994	4,857,784	1.524	0.10	848	49.37	783.15	Vertical, Flapper
Dust Collector 1	DC01	504,094.24	4,857,951.7	8.23	1.30		0.001	295.96	Horizontal
Dust Collector 2	DC02	504,093.46	4,857,938.95	8.23	1.30		0.001	295.96	Horizontal
Dust Collector 3[1]	DC03	504,094.46	4,857,923.47	8.23	1.30		0.001	317.16	Horizontal
Dust Collector 4[2]	DC04	504,103.45	4,857,895.99	8.23	1.02		0.001	317.16	Horizontal
Dust Collector 5	DC05	504,108.94	4,857,895.99	8.23	0.99		0.001	295.96	Horizontal
Dust Collector 6	DC06	504,114.44	4,857,895.49	8.23	1.30		0.001	295.96	Horizontal
Dust Collector 7	DC07	504,125.43	4,857,896.49	8.23	0.52		0.001	295.96	Horizontal
Dust Collector 8	DC08	504,133.92	4,857,894.5	8.23	1.30		0.001	295.96	Horizontal
Cartridge Collector 1	FARR01	504,009.04	4,857,931.96	9.12	0.46		0.001	295.96	Horizontal
Cartridge Collector 2	FARR02	504,013.03	4,857,932.96	9.04	0.46		0.001	295.96	Horizontal
Cartridge Collector 3	FARR03	504,039	4,857,934	9.04	0.46		0.001	295.96	Horizontal
Cartridge Collector 4	FARR04	504,054	4,857,934	9.04	0.46		0.001	295.96	Horizontal
Cartridge Collector 5	FARR05	504,083.89	4,857,857	6.55	0.46		0.001	295.96	Horizontal
Cartridge Collector 6	FARR06	504,084	4,857,861	6.55	0.46		0.001	295.96	Horizontal
Murphy Rodgers BH	MRBH	504,034	4,857,990.9	9.14	0.30		0.001	295.96	Horizontal
Herding Filtration 1	HERD01	504,077.48	4,857,978.42	5.40	0.64		0.001	295.96	Horizontal
Herding Filtration 2	HERD02	504,073.98	4,857,954.94	8.28	0.76		0.001	295.96	Horizontal
Seed Dryer 1A	DRYER1A	504,017.15	4,857,983.4	9.14	0.46	8,534	24.53	317.16	Vertical, No Raincap
Seed Dryer 1B	DRYER1B	504,021.5	4,857,983.4	9.14	0.46	8,534	19.46	317.16	Vertical, No Raincap
Seed Dryer 4A[1]	DRYER4A	504,094.46	4,857,923.47	8.23	1.30		0.001	317.16	Horizontal
Seed Dryer 4B[2]	DRYER4B	504,103.45	4,857,895.99	8.23	1.02		0.001	317.16	Horizontal

[1] Point source DC03 also includes Seed Dryer 4A. Exhaust temperature is of the seed dryer. Including the stack parameter of DC03 in the parameters for Dryer 4A for informational purposes.
[2] Point source DC04 also includes Seed Dryer 4B. Exhaust temperature is of the seed dryer. Including the stack parameter of DC04 in the parameters for Dryer 4B for informational purposes.

Point Source (Heaters and HVAC)

Building A Heater 01 (Modine, 150K BTU)	HEAT03	503,903.8	4,857,891.9	5.49	0.10		0.001	334.26	Horizontal
Building A Heater 02 (Modine, 150K BTU)	HEAT04	503,894.4	4,857,864.5	5.49	0.10		0.001	334.26	Horizontal
Building A Heater 03 (ADP, 60K BTU)	HEAT05	503,926.7	4,857,864.7	5.49	0.10		0.001	328.71	Horizontal
Building A Heater 04 (Modine, 150K BTU)	HEAT06	503,894.5	4,857,841.2	5.49	0.10		0.001	334.26	Horizontal
Building A Heater 05 (Modine, 150K BTU)	HEAT07	503,918.2	4,857,834.8	6.71	0.10	600	35	334.26	Vertical, Raincap
Building A Heater 06 (Modine, 150K BTU)	HEAT08	503,917	4,857,814.6	9.75	0.10	600	35	334.26	Vertical, Raincap
Building G Heater 01 (Lennox, 195K BTU)	HEAT09	504,055.1	4,857,807.7	5.18	0.13		0.001	334.26	Horizontal
Building G Heater 02 (Modine, 150K BTU)	HEAT10	504,077.5	4,857,807.7	5.18	0.10		0.001	334.26	Horizontal
Building H Heater 01 (Modine, 75K BTU)	HEAT11	504,053.4	4,857,856	5.18	0.15		0.001	334.26	Horizontal
Building H Heater 02 (Modine, 150K BTU)	HEAT12	504,032.8	4,857,856	5.18	0.10		0.001	334.26	Horizontal
Building K Heater 01 (Modine, 150K BTU)	HEAT13	504,068.34	4,857,855.9	4.27	0.10		0.001	334.26	Horizontal
Building K Heater 02 (Modine, 150K BTU)	HEAT14	504,042.1	4,857,875.9	7.32	0.10		0.001	334.26	Horizontal
Building K Heater 03 (Modine, 150K BTU)	HEAT15	504,022.8	4,857,875.9	7.32	0.10		0.001	334.26	Horizontal
Building K Heater 04 (Modine, 150K BTU)	HEAT16	504,011.2	4,857,906.8	6.40	0.10		0.001	334.26	Horizontal
Building K Heater 05 (Modine, 150K BTU)	HEAT17	504,049.5	4,857,914.2	6.40	0.10		0.001	334.26	Horizontal
Building K Heater 06 (Modine, 150K BTU)	HEAT18	504,076.58	4,857,898.62	5.79	0.10	600	35	334.26	Vertical, Raincap
Building K Heater 07 (Enerco, 80K BTU)	HEAT19	504,074.35	4,857,894.81	5.79	0.10	320	18.7	329.26	Vertical, Raincap
Building K Heater 08 (Enerco, 80K BTU)	HEAT20	504,074.35	4,857,888.85	5.79	0.10	320	18.7	329.26	Vertical, Raincap
Building K Heater 09 (Enerco, 80K BTU)	HEAT21	504,074.35	4,857,882.1	5.79	0.10	320	18.7	329.26	Vertical, Raincap
Building L Heater 01 (Reznor, 75K BTU)	HEAT22	504,046.65	4,857,950.59	8.53	0.13	158.4	5.9	329.26	Vertical, Raincap
Building L Heater 02 (Reznor, 200K BTU)	HEAT23	504,030.35	4,857,942.61	8.53	0.20	430.2	6.2	329.26	Vertical, Raincap
Building L Heater 03 (Reznor, 100K BTU)	HEAT24	504,022.72	4,857,976.05	8.53	0.15	266.7	6.9	329.26	Vertical, Raincap
Building L Heater 04 (Reznor, 125K BTU)	HEAT25	504,006.85	4,857,984.17	8.53	0.18	357.7	6.8	329.26	Vertical, Raincap
Building L Heater 05 (Reznor, 125K BTU)	HEAT26	504,001.55	4,857,939.04	8.53	0.18	357.7	6.8	329.26	Vertical, Raincap
Building L Heater 06 (Reznor, 125K BTU)	HEAT27	503,980.84	4,857,984.24	8.53	0.18	357.7	6.8	329.26	Vertical, Raincap
Building L Heater 07 (Reznor, 100K BTU)	HEAT28	504,058.65	4,857,983.61	8.53	0.15	266.7	6.9	329.26	Vertical, Raincap
Building M Heater 01 (Lennox, 195K BTU)	HEAT29	503,943.6	4,857,921.8	4.42	0.13		0.001	334.26	Horizontal
Building M Heater 02 (Lennox, 195K BTU)	HEAT30	503,932.95	4,857,921.8	4.42	0.13		0.001	334.26	Horizontal
Building A HVAC 01 (Goodman, 90K BTU)	HVAC01	503,918.6	4,857,855	6.71	0.10	360	21	334.26	Vertical, Raincap
Building A HVAC 02 (Goodman, 90K BTU)	HVAC02	503,918	4,857,852.5	6.71	0.10	360	21	334.26	Vertical, Raincap
Building L HVAC 01 (Carrier, 80K BTU)	HVAC03	503,988.36	4,857,946.15	8.53	0.05	120	28.17	323.15	Vertical, Raincap
Building L HVAC 02 (Carrier, 80K BTU)	HVAC04	503,988.32	4,857,947.34	8.53	0.05	120	28.17	323.15	Vertical, Raincap
Building L HVAC 03 (Carrier, 80K BTU)	HVAC05	503,987.68	4,857,947.38	8.53	0.05	120	28.17	323.15	Vertical, Raincap
Building L HVAC 04 (Carrier, 80K BTU)	HVAC06	503,987.93	4,857,947.93	8.53	0.05	120	28.17	323.15	Vertical, Raincap
Building M HVAC 01 (Carrier, 115K BTU)	HVAC07	503,931.6	4,857,945.5	5.33	0.08		0.001	334.26	Horizontal
Building M HVAC 02 (Carrier, 115K BTU)	HVAC08	503,923.9	4,857,945.5	5.33	0.08		0.001	334.26	Horizontal
Building M HVAC 03 (Carrier, 115K BTU)	HVAC09	503,923.8	4,857,951.7	5.33	0.08		0.001	334.26	Horizontal
Building M HVAC 04 (Carrier, 115K BTU)	HVAC10	503,933.4	4,857,951.7	5.33	0.08		0.001	334.26	Horizontal
Building M HVAC 05 (Cambridge, 353K BTU)	HVAC11	503,919.4	4,857,953.4	5.33	1.00	1,850	1.11	344.26	Vertical, Raincap

Building P HVAC 01 (Modine, 250K BTU)	HVAC12	504,118.2	4,857,966.7	11.58	0.02		0.001	353.71	Horizontal
Building P HVAC 02 (Cambridge, 353K BTU)	HVAC13	504,124.4	4,857,944	10.06	0.02		0.001	344.26	Horizontal
Building P HVAC 03 (Cambridge, 353K BTU)	HVAC14	504,159.8	4,857,940.7	10.06	0.02		0.001	344.26	Horizontal
Building P HVAC 04 (Cambridge, 353K BTU)	HVAC15	504,127.9	4,857,908.2	10.06	0.02		0.001	344.26	Horizontal
Building P HVAC 05 (Cambridge, 353K BTU)	HVAC16	504,163.3	4,857,902.4	10.06	0.02		0.001	344.26	Horizontal
Building P HVAC 06 (York, 45K BTU)	HVAC17	504,178.9	4,857,916.1	10.06	0.02		0.001	323.15	Horizontal
Building P HVAC 07 (York, 45K BTU)	HVAC18	504,179.9	4,857,912.7	10.06	0.02		0.001	323.15	Horizontal
Building P HVAC 08 (York, 45K BTU)	HVAC19	504,179.2	4,857,910.4	10.06	0.02		0.001	323.15	Horizontal
Building P HVAC 09 (York, 45K BTU)	HVAC20	504,182.1	4,857,905.6	10.06	0.02		0.001	323.15	Horizontal
Building N HVAC 01 (Carrier, 180K BTU)	HVAC21	503,705.25	4,858,023	6.10	0.02		0.001	339.82	Horizontal
Building N HVAC 02 (Carrier, 115K BTU)	HVAC22	503,711	4,858,010	6.10	0.02		0.001	334.26	Horizontal
Building N HVAC 03 (Carrier, 115K BTU)	HVAC23	503,718	4,858,016.3	6.10	0.02		0.001	334.26	Horizontal
Building N HVAC 04 (Carrier, 180K BTU)	HVAC24	503,717.6	4,857,997.8	6.10	0.02		0.001	339.82	Horizontal
Building N HVAC 05 (Carrier, 115K BTU)	HVAC25	503,727.3	4,858,007.9	6.10	0.02		0.001	334.26	Horizontal
Building N HVAC 06 (Carrier, 115K BTU)	HVAC26	503,731	4,857,996.3	6.10	0.02		0.001	334.26	Horizontal
Building N HVAC 07 (Carrier, 115K BTU)	HVAC27	503,733	4,857,998	6.10	0.02		0.001	334.26	Horizontal
Building N HVAC 08 (Carrier, 115K BTU)	HVAC28	503,732	4,857,993	6.10	0.02		0.001	334.26	Horizontal
Building N HVAC 09 (Carrier, 115K BTU)	HVAC29	503,731.3	4,857,985.4	6.10	0.02		0.001	334.26	Horizontal
Building N HVAC 10 (Carrier, 115K BTU)	HVAC30	503,741	4,857,993.42	6.10	0.02		0.001	334.26	Horizontal

Volume Source	Stack ID	Easting	Northing	Release Height [3] (m)	Initial Vertical Dimension [4] (m)	Initial Horizontal Dimension[5] (m)
Seed Dryer 02	DRYER02	504,027.8	4,857,914.7	3.66	1.70	5.88
Seed Dryer 03	DRYER03	503,970	4,858,023	3.66	1.70	1.91
BLDG Q Heaters	HEAT01	504,135.5	4,857,833	3.05	1.42	3.76
BLDG L Heaters	HEAT02	504,047	4,857,932.7	3.05	1.42	2.41

Notes:
[3] Height of building or middle of exhaust vents if horizontal exhaust
[4] Release height divided by 2.15
[5] Effective width of source divided by 4.3

3.2 Potential to Emit Criteria Emission Estimates

Table 2 presents the potential to emit (PTE) criteria emissions for the facility. As stated in Section 1.2, controlled potential emission estimates have been prepared for particulate matter emissions (PM_{10} and $PM_{2.5}$). Note that there are no particulate matter controls for the propane sources. The remaining criteria pollutant emission sources are uncontrolled. Therefore, controlled emissions equal uncontrolled emissions for NOx, SOx, CO, and VOC. PTE emission calculations spreadsheets are included for reference as a separate Microsoft Excel Spreadsheets. PTE calculations will be included with the PTC application.

Table 2
Controlled Emission Estimates

		PM10		PM2.5		NOx		SOx		CO		VOC	
Source	Number of Sources	(lb/hr)	(Ton/yr)	(lb/hr)	(Ton/yr)	(lb/hr)	(Ton/yr)	(lb/hr)	(Ton/yr)	(lb/hr)	(Ton/yr)	(lb/hr)	(Ton/yr)
CUMGEN[1]	1	0.15	0.036	0.15	0.036	27.71	6.93	0.53	0.13	2.77	0.69	0.39	0.10
CATGEN[1]	1	0.07	0.017	0.07	0.017	2.61	0.65	0.82	0.20	0.32	0.08	0.98	0.25
GENGEN[1]	1	0.27	0.068	0.27	0.068	1.86	0.46	0.26	0.06	0.52	0.13	0.06	0.02
DC01	1	0.103	0.449	0.029	0.127								
DC02	1	0.103	0.449	0.029	0.127								
DC03	1	0.103	0.451	0.029	0.127								
DC04	1	0.038	0.165	0.011	0.046								
DC05	1	0.059	0.258	0.017	0.073								
DC06	1	0.096	0.419	0.027	0.118								
DC07	1	0.020	0.088	0.006	0.025								
DC08	1	0.074	0.322	0.021	0.091								
FARR01	1	0.049	0.215	0.014	0.060							0.0024	0.0107
FARR02	1	0.046	0.202	0.013	0.057							0.0002	0.0010
FARR03	1	0.055	0.241	0.015	0.068								
FARR04	1	0.066	0.288	0.019	0.081								
FARR05	1	0.089	0.391	0.025	0.110								
FARR06	1	0.089	0.391	0.025	0.110								
MRBH	1	0.089	0.024	0.002	0.007								
HERD01	1	0.010	0.043	0.003	0.012								
HERD02	1	0.115	0.506	0.033	0.142							0.04	0.19
DRYER1A	1	0.008	0.034	0.008	0.034	0.14	0.62	0.016	0.072	0.082	0.359	0.011	0.048
DRYER1B	1	0.008	0.034	0.008	0.034	0.14	0.62	0.016	0.072	0.082	0.359	0.011	0.048
DRYER02	1	0.019	0.084	0.019	0.084	0.36	1.56	0.041	0.1795	0.205	0.898	0.027	0.119
DRYER03	1	0.015	0.067	0.015	0.067	0.28	1.245	0.033	0.144	0.164	0.718	0.022	0.096
DRYER04A	2	0.008	0.034	0.008	0.034	0.14	0.62	0.016	0.072	0.082	0.359	0.011	0.048
DRYER04B	3	0.011	0.050	0.011	0.050	0.21	0.933	0.025	0.108	0.12	0.539	0.016	0.072
HEAT01	1	0.015	0.067	0.015	0.067	0.028	1.245	0.033	0.144	0.16	0.718	0.022	0.096
HEAT02	1	0.008	0.334	0.008	0.334	0.14	0.622	0.016	0.072	0.082	0.359	0.011	0.048

Modine 75,000 Btu	1	0.001	0.003	0.001	0.003	0.011	0.047	0.002	0.007	0.006	0.027	0.001	0.004
Modine 150,000 Btu	13	0.015	0.065	0.015	0.065	0.277	1.213	0.043	0.187	0.160	0.700	0.021	0.093
Modine 250,000 Btu	1	0.002	0.008	0.002	0.008	0.036	0.156	0.005	0.024	0.020	0.090	0.003	0.012
ADP 60,000 Btu	1	0.0005	0.002	0.0005	0.002	0.009	0.037	0.001	0.006	0.005	0.022	0.001	0.003
Enerco 80,000 Btu	3	0.002	0.008	0.002	0.008	0.034	0.149	0.005	0.023	0.020	0.086	0.003	0.011
Reznor 75,000 Btu	1	0.001	0.003	0.001	0.003	0.011	0.047	0.002	0.007	0.006	0.027	0.001	0.004
Reznor 100,000 Btu	2	0.002	0.007	0.002	0.007	0.028	0.124	0.004	0.019	0.016	0.072	0.002	0.010
Reznor 125,000 Btu	3	0.003	0.013	0.003	0.013	0.053	0.233	0.008	0.036	0.031	0.135	0.004	0.018
Reznor 200,000 Btu	1	0.002	0.007	0.002	0.007	0.028	0.124	0.004	0.019	0.016	0.072	0.002	0.010
Goodman 90,000 Btu	2	0.001	0.006	0.001	0.006	0.026	0.112	0.004	0.017	0.015	0.065	0.002	0.009
Lennox 195,000 Btu	3	0.004	0.020	0.004	0.020	0.083	0.364	0.013	0.056	0.048	0.210	0.006	0.028
York 45,000 Btu	4	0.001	0.006	0.001	0.006	0.026	0.112	0.004	0.017	0.015	0.065	0.002	0.009
Cambridge 353,000 Btu	5	0.014	0.059	0.014	0.059	0.251	1.098	0.039	0.169	0.145	0.634	0.019	0.084
Carrier 72,000 Btu	4	0.002	0.010	0.002	0.010	0.041	0.179	0.006	0.028	0.024	0.103	0.003	0.014
Carrier 115, 00 Btu	12	0.011	0.046	0.011	0.046	0.196	0.859	0.030	0.132	0.113	0.495	0.015	0.066
Carrier 180,000 Btu	2	0.003	0.012	0.003	0.012	0.051	0.224	0.008	0.034	0.030	0.129	0.004	0.017
Facility Wide Total	**85**	**1.4**	**5.6**	**0.5**	**2.1**	**3.0**	**12.3**	**0.4**	**1.7**	**1.7**	**7.6**	**0.3**	**1.2**
Significant Emission Rate			**15**		**10**		**40**		**40**		**100**		**40**
Below Regulatory Concern (BRC)			**1.5**		**1**		**4**		**4**		**10**		**4**
Requires Modeling[3]			**Yes**		**Yes**		**Yes**		**No**		**No**		**No**

[1] Per *State of Idaho Guideline for Performing Air Quality Impact Analysis, Appendix A* dated September 2013. Modeling for 1-hr NO_2 is no longer required for emergency engine generators (intermittent sources) operating less than 100 hours per year for routine testing and maintenance.
[2] Significant Emission Rate – IDAPA 58.01.01.006.106
[3] Below Regulatory Concern (BRC). Modeling for a new or existing unpermitted facility or modification is not required for any criteria pollutant with controlled emissions less than 105 of the significant emission rate. (Section 3.1, *State of Idaho Guideline for Performing Air Quality Impact Analysis, Appendix A* dated September 2013).

3.3 Toxic Air Pollutants

Toxic air pollutants (TAPs) for the facility are summarized in Tables 3 (non-carcinogens) and Table 4 (carcinogens). A complete inventory of TAP uncontrolled potential emission estimates are provided in Appendix C. None of the facility-wide PTE emission estimates for TAPs exceed the Screening Emission Levels provided in IDAPA 58.01.01.585 or 586. Therefore, no modeling is required for these pollutants.

Table 3

Nunhems USA Potential to Emit (PTE) Toxic Non-Carcinogen Emissions

	Lb/hr	Ton/yr	Emission Level (lb/hr)	Exceeds EL (Yes or No)
Acrolein	6.19E-06	3.72E-05	1.70E-02	No
Ammonia	1.01E-03	1.10E-03	1.20E+00	No
Aluminum Oxide	3.96E-06	1.70E-05	6.67E-01	No
Calcium Carbonate	3.29E-03	1.40E-02	6.67E-01	No
Chlorpyrifos	2.44E-06	1.10E-05	1.30E-02	No
Ethylene Glycol	2.24E-04	9.80E-04	8.36E-01	No
Hydrogen Chloride	1.32E-05	5.80E-05	5.00E-02	No
Kaolin	3.93E-06	1.70E-05	1.33E-01	No
Magnesium Oxide	3.30E-06	1.40E-05	6.67E-01	No
Methanol	4.26E-02	1.90E-01	1.73E+01	No
Mica	3.51E-04	1.50E-03	2.00E-01	No
Naphthalene	3.46E-05	2.08E-04	3.33E+00	No
Perlite	7.15E-04	3.10E-03	6.67E-01	No
Phosphine	4.10E-03	1.79E-02	2.70E-02	No
Silica – amorphous	1.59E-03	7.00E-03	6.67E-01	No
Silica – cristobalite	3.17E-04	1.40E-03	3.30E-03	No
Silica – quartz	5.51E-04	2.40E-03	6.70E-03	No
Sodium Hydroxide	1.10E-02	4.80E-02	1.33E-01	No
Thiram	1.41E-01	6.20E-01	3.33E-01	No
Toluene	8.53E-05	5.12E-04	2.50E+01	No
Xylene	2.50E-03	1.10E-02	2.90E+01	No

Emission Level (EL) from IDAPA 58.01.01.585 for non-carcinogens on a 24-hour average

Table 4

Nunhems USA Potential to Emit (PTE) Toxic Carcinogen Emissions

	Lb/hr	Ton/yr	Emission Level (lb/hr)	Exceeds EL (Yes or No)
Arsenic			1.50E-06	
Benzene	3.10E-04	1.36E-03	8.00E-04	No
Beryllium			2.80E-05	
Cadmium			3.70E-06	
Formaldehyde	3.30E-04	4.44E-04	5.1E-04	No
Nickel			2.70E-05	
Naphthalene	3.46E-05	2.08E-04	9.10E-05	No
Thiourea	1.25E-06	1.31E-09	1.20E-05	No
Benzo(a)pyrene	9.50E-08	4.16E-07	2.00E-06	No
Benz(a)anthracene	3.09E-07	1.35E-06	NA	
Benzo(b)fluoranthene	3.64E-07	1.60E-06	NA	
Benzo(k)fluoranthene	8.03E-08	3.52E-07	NA	
Chrysene	5.16E-07	2.26E-06	NA	
Dibenzo(a,h)anthracene	1.49E-07	6.53E-07	NA	
Indeno(1,2,3-cd)pyrene	1.58E-07	6.90E-07	NA	
Total PAHs	7.91E-05	3.46E-04	9.10E-05	No

Emission Levels (EL) from IDAPA 58.01.01.586 for carcinogens on an annual average

4.0 Modeling

Based on the policy that modeling is not required for any criteria pollutant with controlled emission less than 10% of the significant emissions rate, ambient air modeling is only proposed for **PM_{10}**, **$PM_{2.5}$**, and **NOx** for this PTC application. In addition, we are proposing to exclude 1-hr **NO_2** modeling for the three emergency generators.

4.1 Dispersion Model

The EPA-approved AERMOD (Version 14134) model will be used. AERMOD is a steady-state plume model that simulates air dispersion based on planetary boundary layer turbulence structure and scaling concepts, including treatment of both surface and elevated sources, and both simple and complex terrain. This model is recommended for short range (< 50 km) dispersion from the source. AERMOD will be run with the following options.

- Regulatory default options,
- Direction-specific building downwash,
- Actual receptor elevations and hill height scales,
- Complex/intermediate terrain algorithms

4.2 Meteorological Data

5 year Boise, Idaho AERMET meteorological data will be used for modeling. Meteorological data was supplied by IDEQ.

4.3 Ambient Conditions

Proposed rural background concentrations for criteria air pollutants are provided in Table 5. Please confirm if these background concentrations are applicable.

TABLE 5
Background Criteria Pollutant Concentrations (μg/m^3)

Pollutant	1-hr	3-hr	8-hr	24-hr	Annual
NO_x	42.4 [1]				17 [2]
SO_2	TBD				
PM_{10}				73 [2]	
$PM_{2.5}$				19.3 [3]	6.3 [4]

Notes:

Background concentrations were recommended by DEQ on April 19, 2012 for JBR initial PTC application submittal

[1] Averages of high 2nd high 1-hour values plus 1 sigma, 2006-2008. Burke, Dunn, McKenzie, and Jackson Counties (North Dakota)

[2] IDEQ March 2003, Default rural/agricultural

[3] St. Luke's Meridian $PM_{2.5}$ monitor, 2008, 2009, and 2010 finalized data from the U.S. EPA AirData website. The 24-hour concentration is the 3-year average of each year's 98th percentile value

[4] St. Luke's Meridian $PM_{2.5}$ monitor, 2008, 2009, and 2010 finalized data from the U.S. EPA AirData website. The annual concentration is the 3-year average for the weighted mean value for each year

TBD = To be determined. Value will determined based on U.S. EPA AirData website.

4.4 Receptors

The ambient air boundary will be the facility fenceline. The selection of receptors in AERMOD will be as follows:

- Discrete Receptors 25 meters around the property line.
- A 100-meter grid extended approximately 1 kilometer.
- A 500-meter grid extended approximately 5 kilometers.

U.S. Geological Survey (USGS) National Elevation Dataset (NED) terrain data will be used to determine receptor elevations and terrain maxima.

4.5 Refined analysis

Comparison to the Ambient Air Quality Standards will be conducted as follows:

- A PTC application for a new facility or previously unpermitted facility require comparison to the NAAQS. This maximum concentration will include contributions from the facility, nearby sources, and ambient background concentrations.
- IDEQ will identify any nearby contributing sources, if any, that need to be included in the analysis.

5.0 Regulatory Review

Standards and Criteria Levels

Table 6 summarizes applicable criteria including:

- National Ambient Air Quality Standards (NAAQS).

Table 6
National Ambient Air Quality Standards

Pollutant	Averaging Time	Standard (μg/m³)
Carbon monoxide (CO)	1-hour	40,000
	8-hour	10,000
Nitrogen dioxide (NO2)	1-hour	100 ppb (188 μg/m³)
	Annual	100
Sulfur dioxide (SO2)	1-hour	75 ppb (196 μg/m³)
	3-hour	1,300
	24-hour	365
	Annual	80
Particulate matter <10 microns (PM10)	24-hour	150
	Annual	50
Particulate matter <2.5 microns (PM2.5)	24-hour	35
	Annual	15

Notes:
ppb = parts per billion

Appendix H

DEQ Approval Letter for Modeling Protocol

COPYRIGHT 2015 BY CH2M HILL, INC. • COMPANY CONFIDENTIAL

STATE OF IDAHO
DEPARTMENT OF
ENVIRONMENTAL QUALITY

1410 NORTH HILTON, BOISE, ID 83706 · (208) 373-0502

C. L. "BUTCH" OTTER, GOVERNOR
CURT FRANSEN, DIRECTOR

January 29, 2014

Rick McCormick
CH2M Hill

RE: Modeling Protocol for the Nunhems USA Permit to Construct Application for their facility near Parma, ID

Rick:

DEQ received your updated dispersion modeling protocol submitted to me via email September 5, 2014. The modeling protocol was submitted on behalf of Nunhems USA (Nunhems). The modeling protocol proposes methods and data for use in the ambient impact analyses of a Permit to Construct (PTC) application for their existing facility located near Parma, Idaho, at 1200 Anderson Corner Road, Parma.

The modeling protocol has been reviewed and DEQ has the following comments:

- Comment 1: NOx emissions from the testing of emergency engines can be excluded from 1-hour NO_2 impact analyses as per DEQ guidance policy.

- Comment 2: DEQ did not review the emissions rates listed for accuracy or appropriateness. Emissions calculation methods will be reviewed by the permit writer during the application review process. If you have questions on emissions calculation methods, please contact a permit writer via the permitting hotline (1-877-573-7648).

- Comment 3: The protocol indicates that AERMOD version 12345 will be used. Modeling must be performed using the current version of AERMOD and AERMAP at the time the protocol is approved. The current version of AERMOD is 14134 and the current version of AERMAP is 11103.

- Comment 4: Background concentrations have been revised by DEQ since previous modeling analyses. DEQ used concentrations from the NWAIRQUEST design value concentration tool to generate appropriate background concentrations for the Nunhems site. Those concentrations are as follows: 1-hour NO_2 = 49 µg/m^3; annual NO_2 = 5.6 µg/m^3; 1-hour SO_2 = 5.5 µg/m^3; 24-hour PM_{10} = 73 µg/m^3; 24-hour $PM_{2.5}$ = 19 µg/m^3; annual $PM_{2.5}$ = 7.3 µg/m^3.

- Comment 5: The protocol states that 25-meter receptor spacing will be used along the property boundary. DEQ recommends that this spacing be extended out to 100 meters from the property boundary. Also, it is the applicant's responsibility to use a sufficiently tight receptor network such that the maximum modeled concentration is reasonably resolved. If submitted modeling shows a substantial concentration gradient in the vicinity of maximum modeled impacts that are approaching NAAQS, then DEQ may determine the application incomplete.

- Comment 6: The protocol states that DEQ will identify any nearby co-contributing sources. As the DEQ modeling guideline state, it is the applicant's responsibility to identify potentially co-contributing sources.

- Comment 7: The protocol indicates that the Plume Volume Molar Ratio Method (PVMRM) will be used to demonstrate compliance with the 1-hour NO_2 NAAQS. The application must provide an explanation for using PVMRM over OLM addressing NOx chemistry.

- Comment 8: The protocol states that an ambient equilibrium ratio of 0.8 will be used in the 1-hour NO_2 modeling with PVMRM. The default equilibrium ratio of 0.9 must be used in the analysis unless extensive justification is provided for an alternative value.

- Comment 9: DEQ has just developed a Modeling Report Template to assist applicants in meeting DEQ's requirements for a complete air impact analysis and to assist DEQ staff in the review of submitted applications. Please use this template to prepare the modeling report.

- Comment 10: DEQ did not review in detail the supporting documentation for stack parameters (primarily stack flow rate and temperature). Please consult section 4.3 of the attached Modeling Report Template for a more detailed description of DEQ's expectations for justification/documentation of release parameters.

- Comment 11: The protocol indicates that DEQ provided CH2M Hill with processed meteorological data for use in AERMOD. I am not uncertain as to whether the most-recent update of meteorological data were provided, so I attached the most-recently processed Boise meteorological data to the email in which this protocol approval was provided.

DEQ's modeling staff considers the submitted dispersion modeling protocol, with resolution of the additional items noted above, to be approved. It should be noted, however, that the approval of this modeling protocol is not meant to imply approval of a completed dispersion modeling analysis. Please refer to the *State of Idaho Air Quality Modeling Guideline*, which is available on the Internet at http://www.deq.state.id.us/air/permits_forms/permitting/modeling_guideline.pdf, for further guidance.

To ensure a complete and timely review of the final analysis, our modeling staff requests that electronic copies of all modeling input and output files (including BPIP and AERMAP input and output files) are submitted with an analysis report. If DEQ provided model-ready meteorological data files, then these do not need to be resubmitted to DEQ with the application. Also, please include with the application materials a copy of the protocol and this protocol approval notices. If you have any further questions or comments, please contact me at (208) 373-0112.

Sincerely,

Kevin Schilling
Stationary Source Air Modeling Coordinator
Idaho Department of Environmental Quality
208 373-0112

Appendix I

Modeling Results

COPYRIGHT 2015 BY CH2M HILL, INC. • COMPANY CONFIDENTIAL

Nunhems Seed Treatment Processing Plant
Impact Modeling Analyses Report
3/25/2014

Contents

Contents 1
1.0 Project Description and Background as it Relates to Modeling Analyses 2
1.1 General Facility/Project Description 2
1.2 Location of Project 6
1.3 Existing Permits and Modeling Analyses Performed 7
2.0 Modeling Analyses Applicability and Protocol 8
2.1 Applicable Standards 8
2.2 Criteria Pollutant Modeling Applicability 11
2.3 TAP Modeling Applicability 12
2.4 Modeling Protocol 14
3.0 Modeled Emissions Sources 15
3.1 Criteria Pollutants 18
3.1.1 Modeled Emissions Rates for Significant Impact Level Analyses 18
3.1.2 Modeled Emissions Rates for Cumulative Impact Analyses 35
3.1.3 NO_2/NOx Ratio for NOx Chemistry Modeling 35
3.1.4 Special Methods for Modeling Criterial Pollutant Emissions 35
3.2 Toxic Air Pollutants 35
3.3 Emissions Release Parameters 36
4.0 Modeling Methodology 44
4.1 Model Selection 44
4.2 Meteorological Data 45
4.3 Effects of Terrain 45
4.4 Facility Layout 45
4.7 Receptor Network 46
4.8 Background Concentrations 47
4.9 NOx Chemistry 47

5.0 Results and Discussion 49
5.1 Significant Impact Level Analyses 49
5.1.2 Cumulative NAAQS Impact Analyses 50
5.2 TAP Impact Analyses 50

Appendices:

Appendix A Consent Order
Appendix B Initial IDEQ PTC Application Denial Letter
Appendix C Equipment Manufacturer specification sheets
Appendix G Modeling Protocol
Appendix H DEQ Approval Letter

Meteorological Data – see file on attached CD: AERMET_DEQ

1.0 Project Description and Background as it Relates to Modeling Analyses

Nunhems USA (Nunhems) operates a Seed Treatment Processing facility located at 1200 Anderson Corner Road, Parma, Idaho (facility). Nunhems was issued a Permit Denial letter on June 28, 2013, by the Idaho Department of Environmental Quality (IDEQ) and has been operating based on a Consent Order issued on October 19, 2012. Nunhems is now submitting a new Permit-to-Construct (PTC) application.

This air quality impact analysis was performed in support of this PTC application required under IDAPA 58.01.01.200. Idaho regulations require a facility applying for a PTC modification to demonstrate compliance with the NAAQS.

This document summarizes the modeling methodology used to evaluate the facility's impacts to air quality with respect to criteria and state toxic air pollutant (TAPs) emissions. It has been prepared based on the U.S. Environmental Protection Agency (EPA) Guidelines on Air Quality Models (GAQM), and the State of Idaho Guideline for Performing Air Quality impact Analyses (ID AQ-01, September, 2013).

1.1 General Facility/Project Description

The Nunhems facility is located approximately 6 miles north of Parma, Idaho. There are five processing stages: warehousing, seed conditioning, seed enhancement, seed treatment, and packaging and shipping.

Warehousing – Once seeds are received at the facility, they are inspected to determine if the product is "dirt seed" or "clean seed." Both clean and dirt-seed are sampled and analyzed to determine trueness to type, purity, vigor, seed health and seed count. Seeds are then analyzed for moisture content and dried, if

needed, to bring the product to long term storage standards. A fumigation process is also performed, as needed, in order to eliminate infestation of boll weevils and other insects that may damage the seeds.

Seed Conditioning – Seed conditioning is also referred to as seed cleaning or seed milling and is the process of extracting the clean, pure seed from the plant parts that came with the seed from the field. Product considered "dirt seed" is received and stored within an adjacent building before it is conditioned within the conditioning building. Once received in the conditioning building, dirt seed goes through a "scalping" or pre-cleaning process where product is run across an air screen cleaner to remove the largest and smallest plant parts from the seed. Seed goes through a separate process known as "brushing" where the awns or hairs of the seed are removed. After scalping and/or brushing, the seed is sent through the conditioning lines where they are further cleaned, density separated, color sorted and sized. If the quality and health standards are met, seed is moved to acclimated seed storage. Based upon the sales needs, Nunhems decides whether the product is: 1) enhanced, 2) treated, 3) packaged for stock, or 4) packaged for sale and shipment.

Seed Enhancement – During the seed enhancement process, seeds are 1) disinfected using a 1-percent chlorine solution, 2) primed (or pre-germinated), 3) sorted, and 4) pelleted (where a polymer and filler is added to the seed to create a more uniform shape).

Seed Treatment – After seed enhancement, seeds are sent for treatment where a thin layer of water-based polymer is applied in order to encapsulate the seed and hold the pesticide next to the seed.

Packaging and Shipment – Logistics determines which type of container the product will be packaged in (pails, cans or pouches), and whether it will be packed for stock or for sale/distribution.

Nunhems maintains eight Carothers dust collectors, six FARR cartridge dust collectors, one Murphy Rodgers baghouse, and two Herding filtration units to control particulate matter emissions. Controlled potential emission estimates have been prepared for particulate matter emissions (PM10 and PM2.5). The remaining emission sources are uncontrolled and consist of process heaters, building heaters, and emergency generators. The process heaters and building heaters use propane exclusively as the primary fuel source. Nunhems maintains three emergency backup generators for emergency power. Each generator uses ultra-low sulfur diesel fuel and operates less than 100 hours per year for routine testing and maintenance.

A site plan showing current layout of the facility is included in Figure 1. A process flow diagram is provided in Figure 2. A detailed list of facility sources can be found in Section 4.0.

Figure 1: Facility Layout

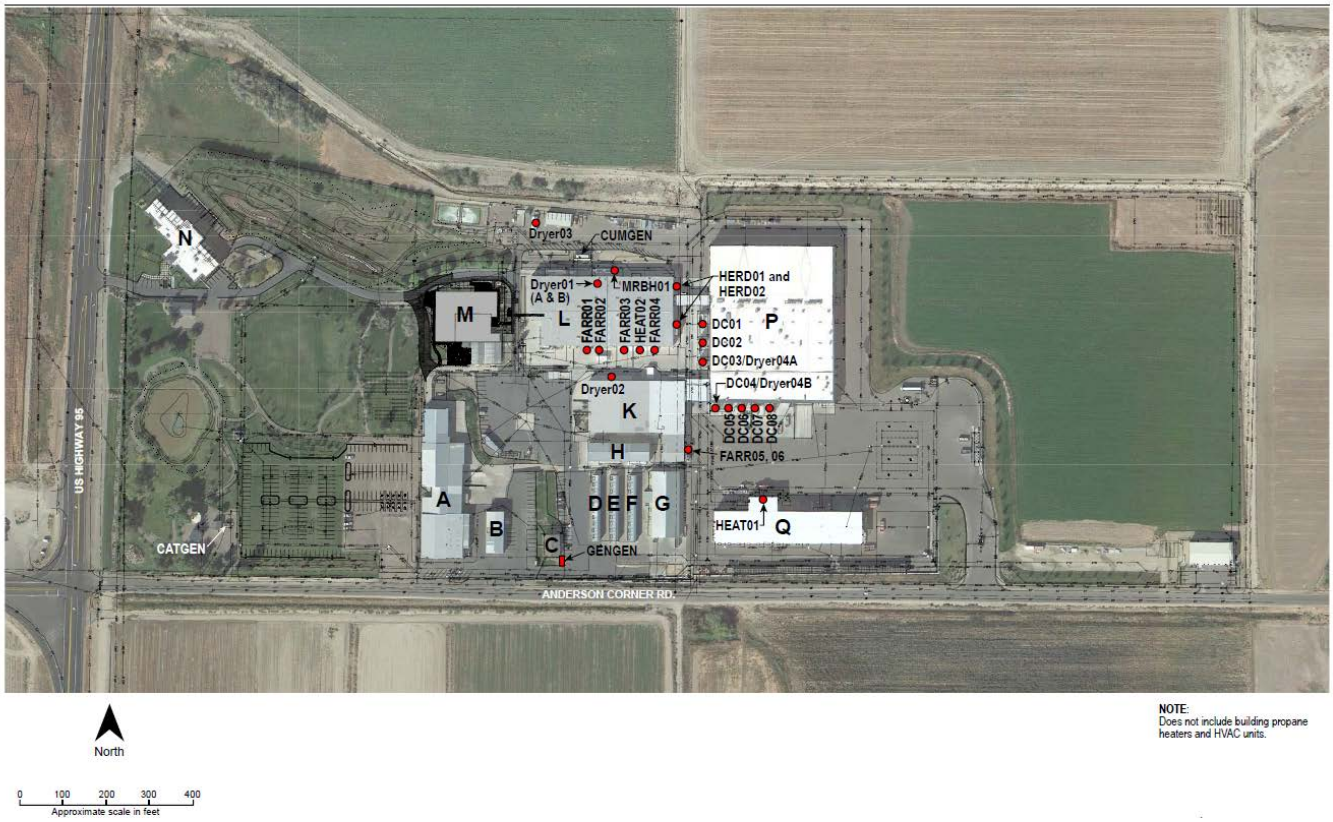

Figure 2: Process Flow Diagram

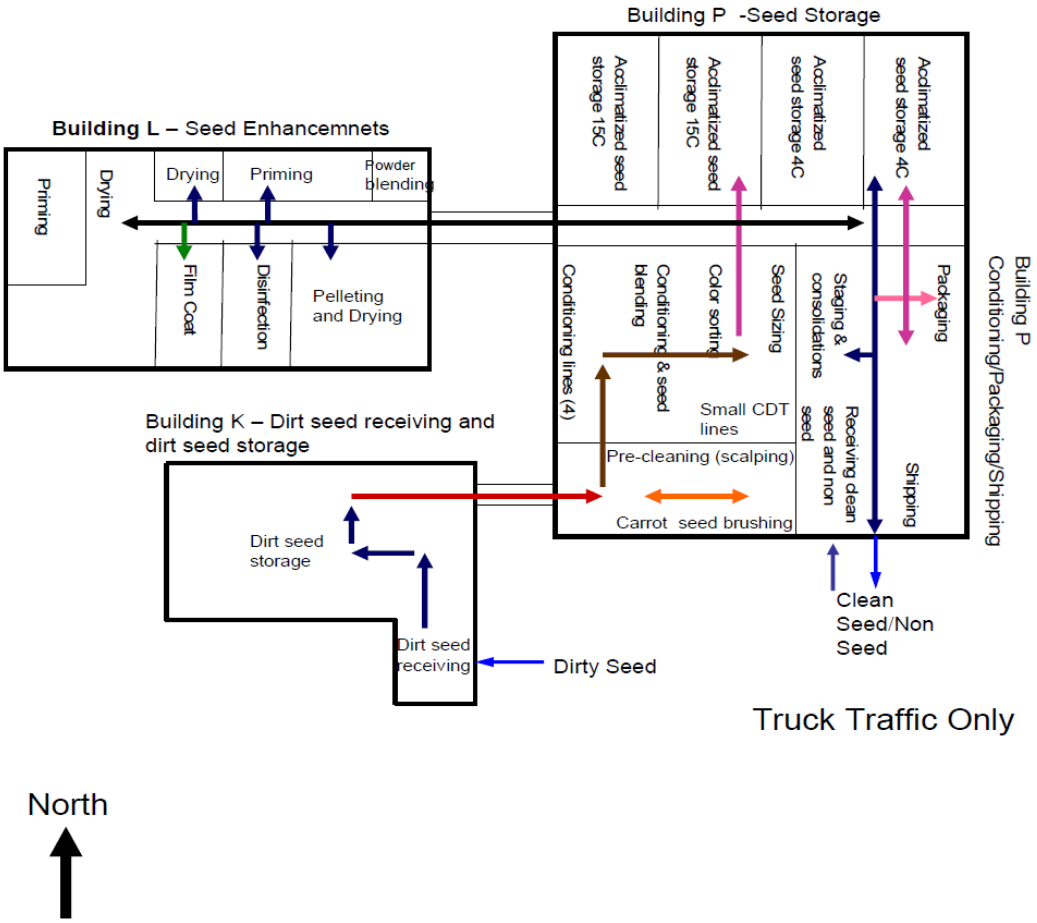

1.2 Location of Project

The facility is located at 1200 Anderson Corner Road, approximately six miles north of Parma, Idaho, in Payette County, Latitude: 43°52'23.12"N Longitude: 116°57'4.92"W, UTM Zone 11.

Payette County is in attainment for all criteria pollutants. The surrounding area is primarily agricultural and generally flat. Other air pollution sources in the area include particulate matter and non-road vehicle emissions from farming operations.

__X__A map showing the geographical location of the facility is provided in this section or a reference is provided to another location in the application where a map is provided. (Figure 3)

Figure 3: Facility Location

1.3 Existing Permits and Modeling Analyses Performed

On October 19, 2012, Nunhems was issued a Consent Order for operating without an air quality PTC by the IDEQ. Nunhems was issued a Permit Denial letter on June 28, 2013 by the Idaho Department of Environmental Quality (IDEQ). A copy of the Consent Order and initial IDEQ PTC application denial letter are provided in Appendix A and B.

__X__Any existing air quality permits are listed and described in this section, and any associated air quality modeling analyses have been described and referenced, and submitted if appropriate.

2.0 Modeling Analyses Applicability and Protocol

Sections 3.1 – 3.3 below describe why modeling was performed for each criteria pollutant. As explained in section 3.3, none of the facility-wide PTE emission estimates for TAPs exceed the Screening Emission Levels provided in IDAPA 58.01.01.585 or 586. Therefore, modeling was not required for these pollutants.

2.1 Applicable Standards

Criteria pollutant National Ambient Air Quality Standards (NAAQS) are listed in Table 1, along with significant impact levels (SILs).

Table 1. APPLICABLE REGULATORY LIMITS

Pollutant	Averaging Period	Significant Impact Levels[a] (µg/m^3)[b]	Regulatory Limit [c] (µg/m^3)	Modeled Design Value Used[d]
PM_{10}[e]	24-hour	5.0	150[f]	Maximum 6th highest[g]
$PM_{2.5}$[h]	24-hour	1.2	35[i]	Mean of maximum 8th highest[j]
	Annual	0.3	12[k]	Mean of maximum 1st highest[l]
Carbon monoxide (CO)	1-hour	2,000	40,000[m]	Maximum 2nd highest[n]
	8-hour	500	10,000[m]	Maximum 2nd highest[n]
Sulfur Dioxide (SO_2)	1-hour	3 ppb[o] (7.8 µg/m^3)	75 ppb[p] (196 µg/m^3)	Mean of maximum 4th highest[q]
	3-hour	25	1,300[m]	Maximum 2nd highest[n]
	24-hour	5	365[m]	Maximum 2nd highest[n]
	Annual	1.0	80[r]	Maximum 1st highest[n]
Nitrogen Dioxide (NO_2)	1-hour	4 ppb (7.5 µg/m^3)	100 ppb[s] (188 µg/m^3)	Mean of maximum 8th highest[t]
	Annual	1.0	100[r]	Maximum 1st highest[n]
Lead (Pb)	3-month[u]	NA	0.15[r]	Maximum 1st highest[n]
	Quarterly	NA	1.5[r]	Maximum 1st highest[n]
Ozone (O_3)	8-hour	40 TPY VOC[v]	75 ppb[w]	Not typically modeled

a. Idaho Air Rules Section 006 (definition for significant contribution) or as incorporated by reference as per Idaho Air Rules Section 107.03.b.
b. Micrograms/cubic meter.
c. Incorporated into Idaho Air Rules by reference, as per Idaho Air Rules Section 107.
d. The maximum 1st highest modeled value is always used for the significant impact analysis unless indicated otherwise. Modeled design values are calculated for each ambient air receptor.
e. Particulate matter with an aerodynamic diameter less than or equal to a nominal 10 micrometers.
f. Not to be exceeded more than once per year on average over 3 years.
g. Concentration at any modeled receptor when using five years of meteorological data.
h. Particulate matter with an aerodynamic diameter less than or equal to a nominal 2.5 micrometers.
i. 3-year mean of the upper 98th percentile of the annual distribution of 24-hour concentrations.
j. 5-year mean of the 8th highest modeled 24-hour concentrations at the modeled receptor for each year of meteorological data modeled. For the SIL analysis, the 5-year mean of the 1st highest modeled 24-hour impacts at the modeled receptor for each year.
k. 3-year mean of annual concentration.
l. 5-year mean of annual averages at the modeled receptor.
m. Not to be exceeded more than once per year.
n. Concentration at any modeled receptor.
o. Interim SIL established by EPA policy memorandum.
p. 3-year mean of the upper 99th percentile of the annual distribution of maximum daily 1-hour concentrations.
q. 5-year mean of the 4th highest daily 1-hour maximum modeled concentrations for each year of meteorological data modeled. For the significant impact analysis, the 5-year mean of 1st highest modeled 1-hour impacts for each year is used.
r. Not to be exceeded in any calendar year.
s. 3-year mean of the upper 98th percentile of the annual distribution of maximum daily 1-hour concentrations.
t. 5-year mean of the 8th highest daily 1-hour maximum modeled concentrations for each year of meteorological data modeled. For the significant impact analysis, the 5-year mean of maximum modeled 1-hour impacts for each year is used.
u. 3-month rolling average.
v. An annual emissions rate of 40 ton/year of VOCs is considered significant for O_3.
w. Annual 4th highest daily maximum 8-hour concentration averaged over three years.

TAP emissions increases resulting from the project are identified in Table 2.

Table 2. TAP ELS AND AACS/AACCS

TAP	Non-Carcinogen or Carcinogen	Screening Emissions Level (EL)[a]	AAC or AACC[b]
		(lb/hr)	($\mu g/m^3$)
Acrolein	Non-Carcinogen	1.70E-02	1.25E+01
Ammonia	Non-Carcinogen	1.20E+00	9.00E+02
Aluminum Oxide	Non-Carcinogen	6.67E-01	5.00E+02
Calcium Carbonate	Non-Carcinogen	6.67E-01	5.00E+02
Chlorpyrifos	Non-Carcinogen	1.30E-02	1.00E+01
Ethylene Glycol	Non-Carcinogen	8.36E-01	6.35E+03
Hydrogen Chloride	Non-Carcinogen	5.00E-02	3.75E+02

Table 2. TAP ELS AND AACS/AACCS			
TAP	**Non-Carcinogen or Carcinogen**	**Screening Emissions Level (EL)[a]**	**AAC or AACC[b]**
		(lb/hr)	**(µg/m³)**
Kaolin	Non-Carcinogen	1.33E-01	1.00E+02
Magnesium Oxide	Non-Carcinogen	6.67E-01	5.00E+02
Methanol	Non-Carcinogen	1.73E+01	1.30E+04
Mica	Non-Carcinogen	2.00E-01	1.50E+02
Naphthalene	Non-Carcinogen	3.33E+00	2.50E+03
Perlite	Non-Carcinogen	6.67E-01	5.00E+02
Phosphine	Non-Carcinogen	2.70E-02	2.00E+01
Silica – amorphous	Non-Carcinogen	6.67E-01	5.00E+02
Silica – cristobalite	Non-Carcinogen	3.30E-03	2.50E+00
Silica – quartz	Non-Carcinogen	6.70E-03	5.00E+00
Sodium Hydroxide	Non-Carcinogen	1.33E-01	1.00E+02
Thiram	Non-Carcinogen	3.33E-01	2.50E+02
Toluene	Non-Carcinogen	2.50E+01	1.88E+04
Xylene	Non-Carcinogen	2.90E+01	2.18E+04
Arsenic	Carcinogen	1.50E-06	2.30E-04
Benzene	Carcinogen	8.00E-04	1.20E-01
Beryllium	Carcinogen	2.80E-05	4.20E-03
Cadmium	Carcinogen	3.70E-06	5.60E-04
Formaldehyde	Carcinogen	5.10E-04	7.70E-02
Nickel	Carcinogen	2.70E-05	4.20E-02
Naphthalene	Carcinogen	9.10E-05	
Thiourea	Carcinogen	1.20E-05	1.80E-03
Benzo(a)pyrene	Carcinogen	2.00E-06 (7-PAH group - considered together as one TAP)	3.00E-4 (7-PAH group - considered together as one TAP)
Benzo(a)anthracene	Carcinogen		
Benzo(b)fluoranthene	Carcinogen		
Benzo(k)fluoranthene	Carcinogen		
Chrysene	Carcinogen		
Dibenzo(a,h)anthracene	Carcinogen		
Indeno(1,2,3-cd)pyrene	Carcinogen		
Total PAHs (except 7-PAH group)	Carcinogen	9.10E-05	1.40E-02

a. ELs from Idaho Air Rules Section 585 and 586 in pounds/hour.

b. Acceptable Ambient Concentration (AAC) or Acceptable Ambient Concentration for a Carcinogen (AACC) from Idaho Air Rules Section 585 and 586, in micrograms/cubic meter or milligrams/cubic meter. Note that AACs listed in Idaho Air Rules Section 585 are expressed in units of milligrams/cubic meter rather than micrograms/cubic meter.

__X__All TAPs identified in the emissions inventory for the project are listed in the TAPs EL and AAC/AACC Table in this section.

2.2 Criteria Pollutant Modeling Applicability

Table 3 lists criteria pollutants for which site-specific modeling analyses were performed to demonstrate compliance with NAAQS. Modeling was performed for $PM_{2.5}$, PM_{10}, and NOx. SOx, CO and VOC emission estimates were below regulatory concern (BRC) so were not modeled. See PTE Calculations in PTC application for detailed explanation of calculations.

Table 3. MODELING APPLICABILITY

Criteria Pollutant	Modeled (yes/no)	Basis for Exclusion from Modeling
$PM_{2.5}$ 24-hour	Yes	___BRC Exempt[a] ___Emissions Below Level l Thresholds[b] ___Emissions Below Level II Thresholds[c]
$PM_{2.5}$ annual	Yes	___BRC Exempt ___Emissions Below Level l Thresholds ___Emissions Below Level II Thresholds
PM_{10} 24-hour	Yes	___BRC Exempt ___Emissions Below Level l Thresholds ___Emissions Below Level II Thresholds
NO_2 1-hour	Yes	___BRC Exempt ___Emissions Below Level l Thresholds ___Emissions Below Level II Thresholds
NO_2 annual	Yes	___BRC Exempt ___Emissions Below Level l Thresholds ___Emissions Below Level II Thresholds
SO_2 1-hour, 3-hour	No	_X_BRC Exempt ___Emissions Below Level l Thresholds ___Emissions Below Level II Thresholds
SO_2 annual	No	_X_BRC Exempt ___Emissions Below Level l Thresholds ___Emissions Below Level II Thresholds
CO 1-hour, 8-hour	No	_X_BRC Exempt ___Emissions Below Level l Thresholds ___Emissions Below Level II Thresholds

a. If the project would have qualified for a Category I BRC permitting exemption for the criteria pollutant in question, as per Idaho Air Rules Section 221.01, except for the emissions quantities of another criteria pollutant, then a NAAQS compliance analysis is not required under Section 203.02 or 403.02 for that criteria pollutant.

b. Level I Modeling Thresholds from Table 2 in Section 3 of the DEQ Modeling Guideline. NAAQS compliance is assured through DEQ's non-site-specific modeling analyses.

c. Level II Modeling Thresholds from Table 2 in Section 3 of the DEQ Modeling Guideline. NAAQS compliance is assured through DEQ's non-site-specific modeling analyses. Level II Modeling Thresholds can only be used with prior DEQ approval.

__X__Explanations/documentation why modeling was or was not performed for each criteria pollutant are provided in this section.

__X__Emissions calculations that clearly show how the modeling applicability determination was performed are provided in this section. (See PTE Calculations in PTC application.)

2.3 TAP Modeling Applicability

Toxic air pollutants (TAPs) for the facility are summarized in Table 4 (non-carcinogens) and Table 5 (carcinogens). A complete inventory of TAP uncontrolled potential emission estimates are provided in the PTE Calculations in the PTC application. None of the facility-wide PTE emission estimates for TAPs exceeds the Screening Emission Levels provided in IDAPA 58.01.01.585 or 586. Therefore, no modeling was required for these pollutants.

Table 4

Nunhems USA Potential to Emit (PTE) Toxic Non-Carcinogen Emissions

	Lb/hr	**Ton/yr**	**Emission Level (lb/hr)**	**Exceeds EL (Yes or No)**
Acrolein	6.19E-06	3.72E-05	1.70E-02	No
Ammonia	1.01E-03	1.10E-03	1.20E+00	No
Aluminum Oxide	3.96E-06	1.70E-05	6.67E-01	No
Calcium Carbonate	3.29E-03	1.40E-02	6.67E-01	No
Chlorpyrifos	2.44E-06	1.10E-05	1.30E-02	No
Ethylene Glycol	2.24E-04	9.80E-04	8.36E-01	No
Hydrogen Chloride	1.32E-05	5.80E-05	5.00E-02	No
Kaolin	3.93E-06	1.70E-05	1.33E-01	No
Magnesium Oxide	3.30E-06	1.40E-05	6.67E-01	No
Methanol	4.26E-02	1.90E-01	1.73E+01	No
Mica	3.51E-04	1.50E-03	2.00E-01	No
Naphthalene	3.46E-05	2.08E-04	3.33E+00	No
Perlite	7.15E-04	3.10E-03	6.67E-01	No
Phosphine	4.10E-03	1.79E-02	2.70E-02	No
Silica – amorphous	1.59E-03	7.00E-03	6.67E-01	No
Silica – cristobalite	3.17E-04	1.40E-03	3.30E-03	No
Silica – quartz	5.51E-04	2.40E-03	6.70E-03	No
Sodium Hydroxide	1.10E-02	4.80E-02	1.33E-01	No
Thiram	1.41E-01	6.20E-01	3.33E-01	No
Toluene	8.53E-05	5.12E-04	2.50E+01	No
Xylene	2.50E-03	1.10E-02	2.90E+01	No

Emission Level (EL) from IDAPA 58.01.01.585 for non-carcinogens on a 24-hour average

Table 5. NUNHEMS USA POTENTIAL TO EMIT (PTE) TOXIC CARCINOGEN EMISSIONS

	Lb/hr	Ton/yr	Emission Level (lb/hr)	Exceeds EL (Yes or No)
Arsenic			1.50E-06	
Benzene	3.10E-04	1.36E-03	8.00E-04	No
Beryllium			2.80E-05	
Cadmium			3.70E-06	
Formaldehyde	3.30E-04	4.44E-04	5.1E-04	No
Nickel			2.70E-05	
Naphthalene	3.46E-05	2.08E-04	9.10E-05	No
Thiourea	1.25E-06	1.31E-09	1.20E-05	No
Benzo(a)pyrene	9.50E-08	4.16E-07	2.00E-06	No
Benz(a)anthracene	3.09E-07	1.35E-06	NA	
Benzo(b)fluoranthene	3.64E-07	1.60E-06	NA	
Benzo(k)fluoranthene	8.03E-08	3.52E-07	NA	
Chrysene	5.16E-07	2.26E-06	NA	
Dibenzo(a,h)anthracene	1.49E-07	6.53E-07	NA	
Indeno(1,2,3-cd)pyrene	1.58E-07	6.90E-07	NA	
Total 7-PAH	1.42E-06	6.91E-06	2.00E-6	No
Total PAHs (except 7-PAH group)	7.91E-05	3.46E-04	9.10E-05	No

Emission Levels (EL) from IDAPA 58.01.01.586 for carcinogens on an annual average

__X__Explanation/documentation on why modeling was or was not performed for emissions of each TAP identified in the emissions inventory of the application are provided in this section. (See PTE Calculations in PTC application)

2.4 Modeling Protocol

A modeling protocol was submitted to DEQ prior to the application, on September 5, 2014. The protocol was submitted by Rick McCormick, CH2M HILL. Conditional DEQ protocol approval was provided to Mr. McCormick on January 29, 2015. Project-specific modeling and other required impact analyses were

generally conducted using data and methods described in the protocol and in the *Idaho Air Quality Modeling Guideline*.

__X__If a protocol was submitted to DEQ prior to performing the modeling analyses, the protocol and DEQ's conditional protocol approval notice is included in Attachment _B_ of this Modeling Report.

__X__Concerns identified by DEQ in the protocol approval notice have been addressed in the analyses performed and in this Modeling Report.

3.0 Modeled Emissions Sources

__X__The modeling emissions inventory and the emissions inventory presented in other parts of the permit application are consistent, and if they are not identical numbers, it is clearly shown, with calculations submitted, how the modeled value was derived from the value provided in the emissions inventory.

The facility sources include the following equipment. All emission estimates are based on 8760 hours/year of operation, unless otherwise indicated.

- Three emergency backup generators (point sources). Each emergency generator operates less than 100 hours per year for routine testing and maintenance.

  CATGEN 1
  - Cat C9 250 kW diesel powered generator
  - Ultra low sulfur diesel (ULSD), 0.0015% sulfur content
  - For testing purposes, will operate up to 30 minutes a month

  CUMGEN 2
  - Cummins 1,612 kW diesel powered generator
  - ULSD, 0.0015% sulfur content
  - For testing purposes, will operate up to 30 minutes a month

  GENGEN 3
  - Generac 80 kW diesel powered generator
  - ULSD, 0.0015% sulfur content
  - For testing purposes, will operate up to 30 minutes a month

- Eight dust collectors (point sources)

  Dust collector 01 and 02 (DC01 and DC02)
  - Carothers and Sons manufacturer
  - 99.995% control efficiency
  - 0.0007 grains per dry standard cubic feet (g/dscf)
  - 34,900 cubic feet per minute (cfm) exhaust flow rate

  Dust collector 03 (DC03)
  - Carothers and Sons manufacturer
  - 99.995% control efficiency
  - 0.0007 g/dscf

    - 35,000 cfm exhaust flow rate

  Dust collector 04 (DC04)
    - Carothers and Sons manufacturer
    - 99.995% control efficiency
    - 0.0007 g/dscf
    - 12,800 cfm exhaust flow rate

  Dust collector 05 (DC05)
    - Carothers and Sons manufacturer
    - 99.995% control efficiency
    - 0.0007 g/dscf
    - 20,000 cfm exhaust flow rate

  Dust collector 06 (DC06)
    - Carothers and Sons manufacturer
    - 99.995% control efficiency
    - 0.0007 g/dscf
    - 32,500 cfm exhaust flow rate

  Dust collector 07 (DC07)
    - Carothers and Sons manufacturer
    - 99.995% control efficiency
    - 0.0007 g/dscf
    - 6,800 cfm exhaust flow rate

  Dust collector 08 (DC08)
    - Carothers and Sons manufacturer
    - 99.995% control efficiency
    - 0.0007 g/dscf
    - 25,000 cfm exhaust flow rate

- Six FARR cartridge dust collectors (point sources)

  FARR01 and FARR02
    - Camfil FARR Air Pollution Control
    - Seed treatment (film coating)
    - 0.002 g/dscf (manufacturer guarantee)
    - 99.99% efficient on 0.5 micron particles and larger

  FARR03 and FARR04
    - Camfil FARR Air Pollution Control
    - Seed enhancement (pelleting)
    - 0.002 g/dscf (manufacturer guarantee)
    - 99.99% efficient on 0.5 micron particles and larger

  FARR05 and FARR06
    - Camfil FARR Air Pollution Control
    - Warehousing (bulk unloading)
    - 0.002 g/dscf (manufacturer guarantee)
    - 99.99% efficient on 0.5 micron particles and larger

- One baghouse (point source)

Murphy Rodgers Baghouse (MRBH01)

- Model MRM-12-4D
- Seed enhancement
- 3,900 cfm at 8-inch water column
- 352 ft^2 filter area
- 99.9% efficient on particles of 1 micron or larger

- Two Herding Filtration, LLC units (point source)

HERD01

- Model P-1899 HSL
- Seed enhancement (powder/blending)
- 4,700 cfm
- 99.97% efficient 0.3 micron

HERD02

- Model P-2112 Delta Sys
- Seed enhancement (pelleting)
- 23,200 cfm
- 99.97% efficient 0.3 micron

- Two building heaters for Building Q (HEAT1)
  - Propane fired
  - 1,000,000 Btu/hr per unit
  - Dry scale
  - Volume source
  - Only operates 8 am – 5 pm

- Four building heaters south of Building L (HEAT2)
  - Propane fired
  - 250,000 Btu/hr per unit
  - Dry scale
  - Volume source
  - Only operates 8 am – 5 pm

- Two enclosed seed dryers (DRYER01A and DRYER01B)
  - Building L
  - Propane fired
  - 1,000,000 Btu/hr per unit
  - Point sources

- Seed dryer in Building K (DRYER02)
  - Seed warehousing
  - Propane fired
  - 2,500,000 Btu/hr
  - Volume source
  - Only operated 6 am – 4 pm

- Seed dryer northwest of Building L (DRYER03)
  - Propane fired
  - 2,000,000 Btu/hr

    - Volume source
    - Only operated August and September 6 am – 4 pm

- Seed dryer in Building L (DRYER04A)
    - Two separate dryers that vent out of a common stack associated with DC03
    - Propane fired
    - 500,000 Btu/hr
    - Point source

- Seed dryer in Building L (DRYER04B)
    - Three separate dryers that vent out of a common stack associated with DC04
    - Propane fired
    - 500,000 Btu/hr
    - Point source

- 58 propane space heaters and HVAC units scattered throughout the facility
    - All propane fuel burning
    - Range in size from 45,000 Btu to 353,000 Btu

Manufacturer specification sheets are provided in Appendix C.

3.1 Criteria Pollutants

Based on the policy that modeling is not required for any criteria pollutant with controlled emission less than 10% of the significant emissions rate, ambient air modeling was done only for PM_{10}, $PM_{2.5}$, and NOx for this PTC application. In addition, 1-hr NO_2 modeling for the three emergency generators was excluded (see comment 1 of Protocol Approval Letter, Appendix H).

3.1.1 Modeled Emissions Rates for Significant Impact Level Analyses

Emission rates for emergency generators were based on 30 minutes per month of operation for routine testing and maintenance, maximum of 500 hours per year. For modeling it was assumed that emergency generators could operate a maximum of 1 hour per day and maximum hourly emissions were divided by 24 to obtain the daily emission rate for the model. The emission rate flag option was used for the hourly and daily modeling for several emission sources that are not operated on a continuous basis. The seed dryer DRYER03, only operates in August and September from 6 am to 4 pm. Seed dryer DRYER02 only operates from 6 am to 4 pm year round and HEATER01 and HEATER02 only operate from 8am to 5 pm. Emission rates for all other equipment were based on continuous (8760 hours/year) operation.

Table 6 lists criteria pollutant emissions rates used in the SIL analyses. The background values are assumed to include all of the competing sources.

Table 6. MODELED EMISSIONS RATES FOR SIL ANALYSES				
Source ID	**Source Description**	**Pollutant**	**Averaging Period**	**Emissions[a] (lb/hr)**
CUMGEN	Cummins generator	$PM_{2.5}$	24-hour	0.00608
			Annual	0.00832
		PM_{10}	24-hour	0.00608
		NOx	1-hour	Not Modeled
			Annual	1.58153
MRBH	Murphy Rogers Baghouse 1	$PM_{2.5}$	24-hour	0.00156
			Annual	0.00156
		PM_{10}	24-hour	0.00555
		NOx	1-hour	0.00000
			Annual	0.00000
HERD01	Filtration Unit	$PM_{2.5}$	24-hour	0.00280
			Annual	0.00280
		PM_{10}	24-hour	0.00993
		NOx	1-hour	0.00000

Table 6. MODELED EMISSIONS RATES FOR SIL ANALYSES				
Source ID	**Source Description**	**Pollutant**	**Averaging Period**	**Emissions[a] (lb/hr)**
			Annual	0.00000
HERD02	Filtration Unit	$PM_{2.5}$	24-hour	0.03252
			Annual	0.03252
		PM_{10}	24-hour	0.11545
		NOx	1-hour	0.00000
			Annual	0.00000
FARR04	FARR cartridge dust collector	$PM_{2.5}$	24-hour	0.01852
			Annual	0.01852
		PM_{10}	24-hour	0.06576
		NOx	1-hour	0.00000
			Annual	0.00000
FARR03	FARR cartridge dust collector	$PM_{2.5}$	24-hour	0.01547
			Annual	0.01547
		PM_{10}	24-hour	0.05492
		NOx	1-hour	0.00000

Table 6. MODELED EMISSIONS RATES FOR SIL ANALYSES				
Source ID	**Source Description**	**Pollutant**	**Averaging Period**	**Emissions[a] (lb/hr)**
			Annual	0.00000
FARR02	FARR cartridge dust collector	$PM_{2.5}$	24-hour	0.01296
			Annual	0.01296
		PM_{10}	24-hour	0.04602
		NOx	1-hour	0.00000
			Annual	0.00000
FARR01	FARR cartridge dust collector	$PM_{2.5}$	24-hour	0.01379
			Annual	0.01379
		PM_{10}	24-hour	0.04898
		NOx	1-hour	0.00000
			Annual	0.00000
DC01	Dust Collector 1	$PM_{2.5}$	24-hour	0.02890
			Annual	0.02890

Table 6. MODELED EMISSIONS RATES FOR SIL ANALYSES				
Source ID	**Source Description**	**Pollutant**	**Averaging Period**	**Emissions[a] (lb/hr)**
		PM_{10}	24-hour	0.10261
		NOx	1-hour	0.00000
			Annual	0.00000
DC02	Dust Collector 2	$PM_{2.5}$	24-hour	0.02890
			Annual	0.02890
		PM_{10}	24-hour	0.10261
		NOx	1-hour	0.00000
			Annual	0.00000
DC03	Dust Collector 3	$PM_{2.5}$	24-hour	0.02898
			Annual	0.02898
		PM_{10}	24-hour	0.10290
		NOx	1-hour	0.00000
			Annual	0.00000
DC04	Dust Collector 4	$PM_{2.5}$	24-hour	0.01060
			Annual	0.01060
		PM_{10}	24-hour	0.03763
		NOx	1-hour	0.00000
			Annual	0.00000
DC05	Dust Collector 5	$PM_{2.5}$	24-hour	0.01656
			Annual	0.05880
		PM_{10}	24-hour	0.01656
		NOx	1-hour	0.00000
			Annual	0.00000
DC06	Dust Collector 6	$PM_{2.5}$	24-hour	0.02691
			Annual	0.02691
		PM_{10}	24-hour	0.09555
		NOx	1-hour	0.00000
			Annual	0.00000
DC07	Dust Collector 7	$PM_{2.5}$	24-hour	0.00563
			Annual	0.00563

Table 6. MODELED EMISSIONS RATES FOR SIL ANALYSES				
Source ID	**Source Description**	**Pollutant**	**Averaging Period**	**Emissions[a] (lb/hr)**
		PM_{10}	24-hour	0.01999
		NOx	1-hour	0.00000
			Annual	0.00000
DC08	Dust Collector 8	$PM_{2.5}$	24-hour	0.02070
			Annual	0.02070
		PM_{10}	24-hour	0.07350
		NOx	1-hour	0.00000
			Annual	0.00000
GENGEN	Generac emergency generator	$PM_{2.5}$	24-hour	0.01125
			Annual	0.01541
		PM_{10}	24-hour	0.01125
		NOx	1-hour	Not Modeled
			Annual	0.10601
CATGEN	Emergency caterpillar generator	$PM_{2.5}$	24-hour	0.00289
			Annual	0.00396
		PM_{10}	24-hour	0.00289
		NOx	1-hour	Not Modeled
			Annual	0.14874
FARR05	FARR cartridge dust collector	$PM_{2.5}$	24-hour	0.02514
			Annual	0.02514
		PM_{10}	24-hour	0.08927
		NOx	1-hour	0.00000
			Annual	0.00000
FARR06	FARR cartridge dust collector	$PM_{2.5}$	24-hour	0.02514
			Annual	0.02514
		PM_{10}	24-hour	0.08927
		NOx	1-hour	0.00000
			Annual	0.00000
DRYER1A	Seed dryer	$PM_{2.5}$	24-hour	0.00765

Table 6. MODELED EMISSIONS RATES FOR SIL ANALYSES				
Source ID	**Source Description**	**Pollutant**	**Averaging Period**	**Emissions[a] (lb/hr)**
			Annual	0.00765
		PM_{10}	24-hour	0.00765
		NOx	1-hour	0.14208
			Annual	0.14208
DRYER1B	Seed Dryer	$PM_{2.5}$	24-hour	0.00765
			Annual	0.00765
		PM_{10}	24-hour	0.00765
		NOx	1-hour	0.14208
			Annual	0.14208
HEAT03	Building A Heater 01	$PM_{2.5}$	24-hour	0.00115
			Annual	0.00115
		PM_{10}	24-hour	0.00115
		NOx	1-hour	0.02131
			Annual	0.02131
HEAT04	Building A Heater 02	$PM_{2.5}$	24-hour	0.00115
			Annual	0.00115
		PM_{10}	24-hour	0.00115
		NOx	1-hour	0.02131
			Annual	0.02131
HEAT05	Building A Heater 03 (ADP)	$PM_{2.5}$	24-hour	0.00046
			Annual	0.00046
		PM_{10}	24-hour	0.00046
		NOx	1-hour	0.00852
			Annual	0.00852
HEAT06	Building A Heater 04	$PM_{2.5}$	24-hour	0.00115
			Annual	0.00115
		PM_{10}	24-hour	0.00115
		NOx	1-hour	0.02131
			Annual	0.02131
HEAT07	Building A Heater 5	$PM_{2.5}$	24-hour	0.00115

Table 6. MODELED EMISSIONS RATES FOR SIL ANALYSES				
Source ID	**Source Description**	**Pollutant**	**Averaging Period**	**Emissions[a] (lb/hr)**
			Annual	0.00115
		PM_{10}	24-hour	0.00115
		NOx	1-hour	0.02131
			Annual	0.02131
HEAT08	Building A Heater 06	$PM_{2.5}$	24-hour	0.00115
			Annual	0.00115
		PM_{10}	24-hour	0.00115
		NOx	1-hour	0.02131
			Annual	0.02131
HEAT09	Building G Heater 01	$PM_{2.5}$	24-hour	0.00149
			Annual	0.00149
		PM_{10}	24-hour	0.00149
		NOx	1-hour	0.02770
			Annual	0.02770
HEAT10	Building G Heater 02	$PM_{2.5}$	24-hour	0.00115
			Annual	0.00115
		PM_{10}	24-hour	0.00115
		NOx	1-hour	0.02131
			Annual	0.02131
HEAT11	Building H Heater 01	$PM_{2.5}$	24-hour	0.00057
			Annual	0.00057
		PM_{10}	24-hour	0.00057
		NOx	1-hour	0.01066
			Annual	0.01066
HEAT12	Building H Heater 2	$PM_{2.5}$	24-hour	0.00115
			Annual	0.00115
		PM_{10}	24-hour	0.00115
		NOx	1-hour	0.02131
			Annual	0.02131

Table 6. MODELED EMISSIONS RATES FOR SIL ANALYSES				
Source ID	**Source Description**	**Pollutant**	**Averaging Period**	**Emissions[a] (lb/hr)**
HEAT13	Building K Heater 01	$PM_{2.5}$	24-hour	0.00115
			Annual	0.00115
		PM_{10}	24-hour	0.00115
		NOx	1-hour	0.02131
			Annual	0.02131
HEAT14	Building K Heater 02	$PM_{2.5}$	24-hour	0.00115
			Annual	0.00115
		PM_{10}	24-hour	0.00115
		NOx	1-hour	0.02131
			Annual	0.02131
HEAT15	Building K Heater 03	$PM_{2.5}$	24-hour	0.00115
			Annual	0.00115
		PM_{10}	24-hour	0.00115
		NOx	1-hour	0.02131
			Annual	0.02131
HEAT16	Building K Heater 04	$PM_{2.5}$	24-hour	0.00115
			Annual	0.00115
		PM_{10}	24-hour	0.00115
		NOx	1-hour	0.02131
			Annual	0.02131
HEAT17	Building K Heater 05	$PM_{2.5}$	24-hour	0.00115
			Annual	0.00115
		PM_{10}	24-hour	0.00115
		NOx	1-hour	0.02131
			Annual	0.02131
HEAT22	Building L Heater 1	$PM_{2.5}$	24-hour	0.00057
			Annual	0.00057
		PM_{10}	24-hour	0.00057
		NOx	1-hour	0.01066

Table 6. MODELED EMISSIONS RATES FOR SIL ANALYSES				
Source ID	**Source Description**	**Pollutant**	**Averaging Period**	**Emissions[a] (lb/hr)**
			Annual	0.01066
HEAT23	Building L Heater 02	$PM_{2.5}$	24-hour	0.00153
			Annual	0.00153
		PM_{10}	24-hour	0.00153
		NOx	1-hour	0.02842
			Annual	0.02842
HEAT24	Building L Heater 03	$PM_{2.5}$	24-hour	0.00077
			Annual	0.00077
		PM_{10}	24-hour	0.00077
		NOx	1-hour	0.01421
			Annual	0.01421
HEAT25	Building L Heater 4	$PM_{2.5}$	24-hour	0.00096
			Annual	0.00096
		PM_{10}	24-hour	0.00096
		NOx	1-hour	0.01776
			Annual	0.01776
HEAT26	Building L Heater 5	$PM_{2.5}$	24-hour	0.00096
			Annual	0.00096
		PM_{10}	24-hour	0.00096
		NOx	1-hour	0.01776
			Annual	0.01776
HEAT29	Building M Greenhouse Heater 1	$PM_{2.5}$	24-hour	0.00149
			Annual	0.00149
		PM_{10}	24-hour	0.00149
		NOx	1-hour	0.02770
			Annual	0.02770
HEAT30	Building M Greenhouse Heater 2	$PM_{2.5}$	24-hour	0.00149

Table 6. MODELED EMISSIONS RATES FOR SIL ANALYSES				
Source ID	**Source Description**	**Pollutant**	**Averaging Period**	**Emissions[a] (lb/hr)**
			Annual	0.00149
		PM_{10}	24-hour	0.00149
		NOx	1-hour	0.02770
			Annual	0.02770
HEAT27	Building L Heater 6	$PM_{2.5}$	24-hour	0.00096
			Annual	0.00096
		PM_{10}	24-hour	0.00096
		NOx	1-hour	0.01776
			Annual	0.01776
HEAT28	Building L Heater 7	$PM_{2.5}$	24-hour	0.00077
			Annual	0.00077
		PM_{10}	24-hour	0.00077
		NOx	1-hour	0.01421
			Annual	0.01421
HVAC01	Building A HVAC 01	$PM_{2.5}$	24-hour	0.00069
			Annual	0.00069
		PM_{10}	24-hour	0.00069
		NOx	1-hour	0.01279
			Annual	0.01279
HVAC02	Building A HVAC 02	$PM_{2.5}$	24-hour	0.00069
			Annual	0.00069
		PM_{10}	24-hour	0.00069
		NOx	1-hour	0.01279
			Annual	0.01279
HVAC03	Building L HVAC 1	$PM_{2.5}$	24-hour	0.00055
			Annual	0.00055
		PM_{10}	24-hour	0.00055
		NOx	1-hour	0.01023
			Annual	0.01023

Table 6. MODELED EMISSIONS RATES FOR SIL ANALYSES				
Source ID	**Source Description**	**Pollutant**	**Averaging Period**	**Emissions[a] (lb/hr)**
HVAC04	Building L HVAC 2	$PM_{2.5}$	24-hour	0.00055
			Annual	0.00055
		PM_{10}	24-hour	0.00055
		NOx	1-hour	0.01023
			Annual	0.01023
HVAC05	Building L HVAC 03	$PM_{2.5}$	24-hour	0.00055
			Annual	0.00055
		PM_{10}	24-hour	0.00055
		NOx	1-hour	0.01023
			Annual	0.01023
HVAC06	Building L HVAC 04	$PM_{2.5}$	24-hour	0.00055
			Annual	0.00055
		PM_{10}	24-hour	0.00055
		NOx	1-hour	0.01023
			Annual	0.01023
HVAC12	Building P HVAC 01	$PM_{2.5}$	24-hour	0.00191
			Annual	0.00191
		PM_{10}	24-hour	0.00191
		NOx	1-hour	0.03552
			Annual	0.03552
HVAC13	Building P HVAC 02	$PM_{2.5}$	24-hour	0.00270
			Annual	0.00270
		PM_{10}	24-hour	0.00270
		NOx	1-hour	0.05015
			Annual	0.05015
HVAC14	Building P HVAC 03	$PM_{2.5}$	24-hour	0.00270
			Annual	0.00270
		PM_{10}	24-hour	0.00270
		NOx	1-hour	0.05015

Table 6. MODELED EMISSIONS RATES FOR SIL ANALYSES				
Source ID	**Source Description**	**Pollutant**	**Averaging Period**	**Emissions[a] (lb/hr)**
			Annual	0.05015
HVAC15	Building P HVAC 04	$PM_{2.5}$	24-hour	0.00270
			Annual	0.00270
		PM_{10}	24-hour	0.00270
		NOx	1-hour	0.05015
			Annual	0.05015
HVAC16	Building P HVAC 05	$PM_{2.5}$	24-hour	0.00270
			Annual	0.00270
		PM_{10}	24-hour	0.00270
		NOx	1-hour	0.05015
			Annual	0.05015
HVAC17	Building P HVAC 06	$PM_{2.5}$	24-hour	0.00034
			Annual	0.00034
		PM_{10}	24-hour	0.00034
		NOx	1-hour	0.00639
			Annual	0.00639
HVAC18	Building P HVAC 07	$PM_{2.5}$	24-hour	0.00034
			Annual	0.00034
		PM_{10}	24-hour	0.00034
		NOx	1-hour	0.00639
			Annual	0.00639
HVAC19	Building P HVAC 08	$PM_{2.5}$	24-hour	0.00034
			Annual	0.00034
		PM_{10}	24-hour	0.00034
		NOx	1-hour	0.00639
			Annual	0.00639
HVAC20	Building P HVAC 09	$PM_{2.5}$	24-hour	0.00034
			Annual	0.00034
		PM_{10}	24-hour	0.00034

Table 6. MODELED EMISSIONS RATES FOR SIL ANALYSES				
Source ID	**Source Description**	**Pollutant**	**Averaging Period**	**Emissions[a] (lb/hr)**
		NOx	1-hour	0.00639
			Annual	0.00639
HVAC21	building N HVAC 01 (Big)	$PM_{2.5}$	24-hour	0.00138
			Annual	0.00138
		PM_{10}	24-hour	0.00138
		NOx	1-hour	0.02557
			Annual	0.02557
HVAC22	Building N HVAC 02	$PM_{2.5}$	24-hour	0.00088
			Annual	0.00088
		PM_{10}	24-hour	0.00088
		NOx	1-hour	0.01634
			Annual	0.01634
HVAC23	Building N HVAC 03	$PM_{2.5}$	24-hour	0.00088
			Annual	0.00088
		PM_{10}	24-hour	0.00088
		NOx	1-hour	0.01634
			Annual	0.01634
HVAC24	Building N HVAC 04 (Big)	$PM_{2.5}$	24-hour	0.00138
			Annual	0.00138
		PM_{10}	24-hour	0.00138
		NOx	1-hour	0.02557
			Annual	0.02557
HVAC25	Building N HVAC 05	$PM_{2.5}$	24-hour	0.00088
			Annual	0.00088
		PM_{10}	24-hour	0.00088
		NOx	1-hour	0.01634
			Annual	0.01634
HVAC26	Building N HVAC 06	$PM_{2.5}$	24-hour	0.00088
			Annual	0.00088

Table 6. MODELED EMISSIONS RATES FOR SIL ANALYSES				
Source ID	**Source Description**	**Pollutant**	**Averaging Period**	**Emissions[a] (lb/hr)**
		PM_{10}	24-hour	0.00088
		NOx	1-hour	0.01634
			Annual	0.01634
HVAC27	Building N HVAC 07	$PM_{2.5}$	24-hour	0.00088
			Annual	0.00088
		PM_{10}	24-hour	0.00088
		NOx	1-hour	0.01634
			Annual	0.01634
HVAC28	Building N HVAC 08	$PM_{2.5}$	24-hour	0.00088
			Annual	0.00088
		PM_{10}	24-hour	0.00088
		NOx	1-hour	0.01634
			Annual	0.01634
HVAC29	Building N HVAC 09	$PM_{2.5}$	24-hour	0.00088
			Annual	0.00088
		PM_{10}	24-hour	0.00088
		NOx	1-hour	0.01634
			Annual	0.01634
HVAC30	Building N HVAC 10	$PM_{2.5}$	24-hour	0.00088
			Annual	0.00088
		PM_{10}	24-hour	0.00088
		NOx	1-hour	0.01634
			Annual	0.01634
HEAT18	Building K Heater 6	$PM_{2.5}$	24-hour	0.00115
			Annual	0.00115
		PM_{10}	24-hour	0.00115
		NOx	1-hour	0.02131
			Annual	0.02131
HEAT19	Building K Heater 7	$PM_{2.5}$	24-hour	0.00061

Table 6. MODELED EMISSIONS RATES FOR SIL ANALYSES				
Source ID	**Source Description**	**Pollutant**	**Averaging Period**	**Emissions[a] (lb/hr)**
			Annual	0.00061
		PM_{10}	24-hour	0.00061
		NOx	1-hour	0.01137
			Annual	0.01137
HEAT20	Building K Heater 8	$PM_{2.5}$	24-hour	0.00061
			Annual	0.00061
		PM_{10}	24-hour	0.00061
		NOx	1-hour	0.01137
			Annual	0.01137
HEAT21	Building K Heater 9	$PM_{2.5}$	24-hour	0.00061
			Annual	0.00061
		PM_{10}	24-hour	0.00061
		NOx	1-hour	0.01137
			Annual	0.01137
HVAC07	Building M HVAC 1	$PM_{2.5}$	24-hour	0.00088
			Annual	0.00088
		PM_{10}	24-hour	0.00088
		NOx	1-hour	0.01634
			Annual	0.01634
HVAC08	Building M HVAC 02	$PM_{2.5}$	24-hour	0.00088
			Annual	0.00088
		PM_{10}	24-hour	0.00088
		NOx	1-hour	0.01634
			Annual	0.01634
HVAC09	Building M HVAC 03	$PM_{2.5}$	24-hour	0.00088
			Annual	0.00088
		PM_{10}	24-hour	0.00088
		NOx	1-hour	0.01634
			Annual	0.01634

Table 6. MODELED EMISSIONS RATES FOR SIL ANALYSES				
Source ID	**Source Description**	**Pollutant**	**Averaging Period**	**Emissions[a] (lb/hr)**
HVAC10	Building M HVAC 04	$PM_{2.5}$	24-hour	0.00088
			Annual	0.00088
		PM_{10}	24-hour	0.00088
		NOx	1-hour	0.01634
			Annual	0.01634
HVAC11	Buidling M HVAC 05	$PM_{2.5}$	24-hour	0.00270
			Annual	0.00797
		PM_{10}	24-hour	0.01913
		NOx	1-hour	0.35519
			Annual	0.14800
DRYER02	seed dryer (K)	$PM_{2.5}$	24-hour	0.01530
			Annual	0.00107
		PM_{10}	24-hour	0.01530
		NOx	1-hour	0.28415
			Annual	0.01979
DRYER03	seed dryer (l)	$PM_{2.5}$	24-hour	0.01530
			Annual	0.00574
		PM_{10}	24-hour	0.01530
		NOx	1-hour	0.28415
			Annual	0.10656
HEAT01	Space Heater(s) (Q) 2 heaters	$PM_{2.5}$	24-hour	0.00765
			Annual	0.00287
		PM_{10}	24-hour	0.00765
		NOx	1-hour	0.14208
			Annual	0.05328
HEAT02	Space heaters (L) 4 heaters	$PM_{2.5}$	24-hour	0.00765
			Annual	0.00287
		PM_{10}	24-hour	0.00765
		NOx	1-hour	0.14208
			Annual	0.05328

[a.] Pound/hour emissions rate modeled is the project-specific increase in potential/allowable emissions increase for the averaging period specified for the pollutant.

_____Emissions rates in Table X are identical to those in the model input files for SIL analyses.

___x__Calculation of modeled emissions are thoroughly documented in this section, and any unique handling of emissions in the model have been described. (See PTE Calculations in the PTC application for details)

3.1.2 Modeled Emissions Rates for Cumulative Impact Analyses

The same criteria pollutant emissions rates provide in Table 6 were used in both the SIL and the cumulative NAAQS impact analyses.

___x__Emissions rates for the cumulative NAAQS impact analysis are identical to those in the SIL analysis provided in Table 6 and identical to the model input files for the cumulative NAAQS impact analyses.

___x__Calculation of modeled emissions are thoroughly documented in this section (unless already described in Section 4.1.1), and any unique handling of emissions in the model have been described.

3.1.3 NO_2/NOx Ratio for NOx Chemistry Modeling

The modeling analysis for NO_X followed the EPA recommended 3-tier approach to characterize the conversion of modeled total NO_X emissions to NO_2 concentration for comparison to the NAAQS (40CFR51 Appendix W). The ARM2 method was used and it was assumed that at least 98% of stacks have a default (0.5 NO_2/NO_X) in-stack ratio.

Since the project is under the NAAQS when cumulative impacts modeled using ARM2 are added to background, Tier 3 modeling using OLM or PVMRM was not necessary.

3.1.4 Special Methods for Modeling Criterial Pollutant Emissions

The emission rate flag option was used for the hourly and daily modeling for several emission sources that are not operated on a continuous basis. The seed dryer DRYER03, only operates in August and September from 6 am to 4 pm. Seed dryer DRYER02 only operates from 6 am to 4 pm year round and HEATER01 and HEATER02 only operate from 8am to 5 pm.

3.2 Toxic Air Pollutants

As explained in section 3.3, none of the facility-wide PTE emission estimates for TAPs exceeds the Screening Emission Levels provided in IDAPA 58.01.01.585 or 586. Therefore, no modeling was required for these pollutants.

__n/a__TAP emissions rates have been listed for each TAP that has project cumulative emissions exceeding the applicable EL.

__n/a__Emissions rates in Table X are identical to those in the model input file for TAP analyses.

3.3 Emissions Release Parameters

Table 7 lists stack parameters for point sources and Table 8 lists release parameters for volume and area sources. All stack properties were determined using manufacture specification details or estimated using a similar unit type. Additionally source properties were verified during a recent site visit. Appendix C contains additional detail on manufacturer information regarding source properties.

Table 7. POINT SOURCE STACK PARAMETERS

Release Point	Description	UTM(a) Coordinates		Stack Height	Stack Gas Flow Temp.	Stack Gas Flow Velocity	Modeled Stack Diameter	Orient. Of Release
		Easting-X (m)	Northing-Y (m)	(m)	(K)	(m/sec)	(m)	
CATGEN	Caterpillar Gen	503,760	4,857,808	3.3528	729.76	42.6	0.1778	Vertical, Flapper
CUMGEN	Cummins Gen	504,002.54	4,858,999.40	4.572	763.7	43.9	0.4064	Vertical, Flapper
GENGEN	Generac Gen	503,994	4,857,784	1.524	783.15	49.37	0.1	Vertical, Flapper
DC01	Dust Collector 1	504,094.24	4,857,951.70	8.23	295.96	0.001	1.3	Horizontal
DC02	Dust Collector 2	504,093.46	4,857,938.95	8.23	295.96	0.001	1.3	Horizontal
DC03	Dust Collector 3[1]	504,094.46	4,857,923.47	8.23	317.16	0.001	1.3	Horizontal
DC04	Dust Collector 4[2]	504,103.45	4,857,895.99	8.23	317.16	0.001	1.02	Horizontal
DC05	Dust Collector 5	504,108.94	4,857,895.99	8.23	295.96	0.001	0.99	Horizontal
DC06	Dust Collector 6	504,114.44	4,857,895.49	8.23	295.96	0.001	1.3	Horizontal
DC07	Dust Collector 7	504,125.43	4,857,896.49	8.23	295.96	0.001	0.52	Horizontal
DC08	Dust Collector 8	504,133.92	4,857,894.50	8.23	295.96	0.001	1.3	Horizontal
FARR01	Cartridge Collector 1	504,009.04	4,857,931.96	9.12	295.96	0.001	0.46	Horizontal
FARR02	Cartridge Collector 2	504,013.03	4,857,932.96	9.04	295.96	0.001	0.46	Horizontal
FARR03	Cartridge Collector 3	504,039	4,857,934	9.04	295.96	0.001	0.46	Horizontal
FARR04	Cartridge Collector 4	504,054	4,857,934	9.04	295.96	0.001	0.46	Horizontal

Table 7. POINT SOURCE STACK PARAMETERS								
Release Point	**Description**	**UTM(a) Coordinates**		**Stack Height**	**Stack Gas Flow Temp.**	**Stack Gas Flow Velocity**	**Modeled Stack Diameter**	**Orient. Of Release**
		Easting-X (m)	**Northing-Y (m)**	**(m)**	**(K)**	**(m/sec)**	**(m)**	
FARR05	Cartridge Collector 5	504,083.89	4,857,857	6.55	295.96	0.001	0.46	Horizontal
FARR06	Cartridge Collector 6	504,084	4,857,861	6.55	295.96	0.001	0.46	Horizontal
MRBH	Murphy Rodgers BH	504,034	4,857,990.90	9.14	295.96	0.001	0.3	Horizontal
HERD01	Herding Filtration 1	504,077.48	4,857,978.42	5.4	295.96	0.001	0.64	Horizontal
HERD02	Herding Filtration 2	504,073.98	4,857,954.94	8.28	295.96	0.001	0.76	Horizontal
DRYER1A	Seed Dryer 1A	504,017.15	4,857,983.40	9.14	317.16	24.53	0.46	Vertical, No Raincap
DRYER1B	Seed Dryer 1B	504,021.50	4,857,983.40	9.14	317.16	19.46	0.46	Vertical, No Raincap
DRYER4A	Seed Dryer 4A[1]	504,094.46	4,857,923.47	8.23	317.16	0.001	1.3	Horizontal
DRYER4B	Seed Dryer 4B[2]	504,103.45	4,857,895.99	8.23	317.16	0.001	1.02	Horizontal
HEAT03	Building A Heater 01 (Modine, 150K BTU)	503,903.80	4,857,891.90	5.49	334.26	0.001	0.1	Horizontal
HEAT04	Building A Heater 02 (Modine, 150K BTU)	503,894.40	4,857,864.50	5.49	334.26	0.001	0.1	Horizontal
HEAT05	Building A Heater 03 (ADP, 60K BTU)	503,926.70	4,857,864.70	5.49	328.71	0.001	0.1	Horizontal
HEAT06	Building A Heater 04 (Modine, 150K BTU)	503,894.50	4,857,841.20	5.49	334.26	0.001	0.1	Horizontal
HEAT07	Building A Heater 05 (Modine, 150K BTU)	503,918.20	4,857,834.80	6.71	334.26	35	0.1	Vertical, Raincap
HEAT08	Building A Heater 06 (Modine, 150K BTU)	503,917	4,857,814.60	9.75	334.26	35	0.1	Vertical, Raincap
HEAT09	Building G Heater 01 (Lennox, 195K BTU)	504,055.10	4,857,807.70	5.18	334.26	0.001	0.13	Horizontal
HEAT10	Building G Heater 02 (Modine, 150K BTU)	504,077.50	4,857,807.70	5.18	334.26	0.001	0.1	Horizontal

Table 7. POINT SOURCE STACK PARAMETERS								
Release Point	**Description**	**UTM(a) Coordinates**		**Stack Height**	**Stack Gas Flow Temp.**	**Stack Gas Flow Velocity**	**Modeled Stack Diameter**	**Orient. Of Release**
		Easting-X (m)	**Northing-Y (m)**	**(m)**	**(K)**	**(m/sec)**	**(m)**	
HEAT11	Building H Heater 01 (Modine, 75K BTU)	504,053.40	4,857,856	5.18	334.26	0.001	0.15	Horizontal
HEAT12	Building H Heater 02 (Modine, 150K BTU)	504,032.80	4,857,856	5.18	334.26	0.001	0.1	Horizontal
HEAT13	Building K Heater 01 (Modine, 150K BTU)	504,068.34	4,857,855.90	4.27	334.26	0.001	0.1	Horizontal
HEAT14	Building K Heater 02 (Modine, 150K BTU)	504,042.10	4,857,875.90	7.32	334.26	0.001	0.1	Horizontal
HEAT15	Building K Heater 03 (Modine, 150K BTU)	504,022.80	4,857,875.90	7.32	334.26	0.001	0.1	Horizontal
HEAT16	Building K Heater 04 (Modine, 150K BTU)	504,011.20	4,857,906.80	6.4	334.26	0.001	0.1	Horizontal
HEAT17	Building K Heater 05 (Modine, 150K BTU)	504,049.50	4,857,914.20	6.4	334.26	0.001	0.1	Horizontal
HEAT18	Building K Heater 06 (Modine, 150K BTU)	504,076.58	4,857,898.62	5.79	334.26	35	0.1	Vertical, Raincap
HEAT19	Building K Heater 07 (Enerco, 80K BTU)	504,074.35	4,857,894.81	5.79	329.26	18.7	0.1	Vertical, Raincap
HEAT20	Building K Heater 08 (Enerco, 80K BTU)	504,074.35	4,857,888.85	5.79	329.26	18.7	0.1	Vertical, Raincap
HEAT21	Building K Heater 09 (Enerco, 80K BTU)	504,074.35	4,857,882.10	5.79	329.26	18.7	0.1	Vertical, Raincap
HEAT22	Building L Heater 01 (Reznor, 75K BTU)	504,046.65	4,857,950.59	8.53	329.26	5.9	0.13	Vertical, Raincap

Table 7. POINT SOURCE STACK PARAMETERS								
Release Point	**Description**	**UTM(a) Coordinates**		**Stack Height**	**Stack Gas Flow Temp.**	**Stack Gas Flow Velocity**	**Modeled Stack Diameter**	**Orient. Of Release**
		Easting-X (m)	**Northing-Y (m)**	**(m)**	**(K)**	**(m/sec)**	**(m)**	
HEAT23	Building L Heater 02 (Reznor, 200K BTU)	504,030.35	4,857,942.61	8.53	329.26	6.2	0.2	Vertical, Raincap
HEAT24	Building L Heater 03 (Reznor, 100K BTU)	504,022.72	4,857,976.05	8.53	329.26	6.9	0.15	Vertical, Raincap
HEAT25	Building L Heater 04 (Reznor, 125K BTU)	504,006.85	4,857,984.17	8.53	329.26	6.8	0.18	Vertical, Raincap
HEAT26	Building L Heater 05 (Reznor, 125K BTU)	504,001.55	4,857,939.04	8.53	329.26	6.8	0.18	Vertical, Raincap
HEAT27	Building L Heater 06 (Reznor, 125K BTU)	503,980.84	4,857,984.24	8.53	329.26	6.8	0.18	Vertical, Raincap
HEAT28	Building L Heater 07 (Reznor, 100K BTU)	504,058.65	4,857,983.61	8.53	329.26	6.9	0.15	Vertical, Raincap
HEAT29	Building M Heater 01 (Lennox, 195K BTU)	503,943.60	4,857,921.80	4.42	334.26	0.001	0.13	Horizontal
HEAT30	Building M Heater 02 (Lennox, 195K BTU)	503,932.95	4,857,921.80	4.42	334.26	0.001	0.13	Horizontal
HVAC01	Building A HVAC 01 (Goodman, 90K BTU)	503,918.60	4,857,855	6.71	334.26	21	0.1	Vertical, Raincap
HVAC02	Building A HVAC 02 (Goodman, 90K BTU)	503,918	4,857,852.50	6.71	334.26	21	0.1	Vertical, Raincap
HVAC03	Building L HVAC 01 (Carrier, 80K BTU)	503,988.36	4,857,946.15	8.53	323.15	28.17	0.05	Vertical, Raincap
HVAC04	Building L HVAC 02 (Carrier, 80K BTU)	503,988.32	4,857,947.34	8.53	323.15	28.17	0.05	Vertical, Raincap

Table 7. POINT SOURCE STACK PARAMETERS								
Release Point	**Description**	**UTM(a) Coordinates**		**Stack Height**	**Stack Gas Flow Temp.**	**Stack Gas Flow Velocity**	**Modeled Stack Diameter**	**Orient. Of Release**
		Easting-X (m)	**Northing-Y (m)**	**(m)**	**(K)**	**(m/sec)**	**(m)**	
HVAC05	Building L HVAC 03 (Carrier, 80K BTU)	503,987.68	4,857,947.38	8.53	323.15	28.17	0.05	Vertical, Raincap
HVAC06	Building L HVAC 04 (Carrier, 80K BTU)	503,987.93	4,857,947.93	8.53	323.15	28.17	0.05	Vertical, Raincap
HVAC07	Building M HVAC 01 (Carrier, 115K BTU)	503,931.60	4,857,945.50	5.33	334.26	0.001	0.08	Horizontal
HVAC08	Building M HVAC 02 (Carrier, 115K BTU)	503,923.90	4,857,945.50	5.33	334.26	0.001	0.08	Horizontal
HVAC09	Building M HVAC 03 (Carrier, 115K BTU)	503,923.80	4,857,951.70	5.33	334.26	0.001	0.08	Horizontal
HVAC10	Building M HVAC 04 (Carrier, 115K BTU)	503,933.40	4,857,951.70	5.33	334.26	0.001	0.08	Horizontal
HVAC11	Building M HVAC 05 (Cambridge, 353K BTU)	503,919.40	4,857,953.40	5.33	344.26	1.11	1	Vertical, Raincap
HVAC12	Building P HVAC 01 (Modine, 250K BTU)	504,118.20	4,857,966.70	11.58	353.71	0.001	0.02	Horizontal
HVAC13	Building P HVAC 02 (Cambridge, 353K BTU)	504,124.40	4,857,944	10.06	344.26	0.001	0.02	Horizontal
HVAC14	Building P HVAC 03 (Cambridge, 353K BTU)	504,159.80	4,857,940.70	10.06	344.26	0.001	0.02	Horizontal
HVAC15	Building P HVAC 04 (Cambridge, 353K BTU)	504,127.90	4,857,908.20	10.06	344.26	0.001	0.02	Horizontal
HVAC16	Building P HVAC 05 (Cambridge, 353K BTU)	504,163.30	4,857,902.40	10.06	344.26	0.001	0.02	Horizontal

Table 7. POINT SOURCE STACK PARAMETERS								
Release Point	**Description**	**UTM(a) Coordinates**		**Stack Height**	**Stack Gas Flow Temp.**	**Stack Gas Flow Velocity**	**Modeled Stack Diameter**	**Orient. Of Release**
		Easting-X (m)	**Northing-Y (m)**	**(m)**	**(K)**	**(m/sec)**	**(m)**	
HVAC17	Building P HVAC 06 (York, 45K BTU)	504,178.90	4,857,916.10	10.06	323.15	0.001	0.02	Horizontal
HVAC18	Building P HVAC 07 (York, 45K BTU)	504,179.90	4,857,912.70	10.06	323.15	0.001	0.02	Horizontal
HVAC19	Building P HVAC 08 (York, 45K BTU)	504,179.20	4,857,910.40	10.06	323.15	0.001	0.02	Horizontal
HVAC20	Building P HVAC 09 (York, 45K BTU)	504,182.10	4,857,905.60	10.06	323.15	0.001	0.02	Horizontal
HVAC21	Building N HVAC 01 (Carrier, 180K BTU)	503,705.25	4,858,023	6.1	339.82	0.001	0.02	Horizontal
HVAC22	Building N HVAC 02 (Carrier, 115K BTU)	503,711	4,858,010	6.1	334.26	0.001	0.02	Horizontal
HVAC23	Building N HVAC 03 (Carrier, 115K BTU)	503,718	4,858,016.30	6.1	334.26	0.001	0.02	Horizontal
HVAC24	Building N HVAC 04 (Carrier, 180K BTU)	503,717.60	4,857,997.80	6.1	339.82	0.001	0.02	Horizontal
HVAC25	Building N HVAC 05 (Carrier, 115K BTU)	503,727.30	4,858,007.90	6.1	334.26	0.001	0.02	Horizontal
HVAC26	Building N HVAC 06 (Carrier, 115K BTU)	503,731	4,857,996.30	6.1	334.26	0.001	0.02	Horizontal
HVAC27	Building N HVAC 07 (Carrier, 115K BTU)	503,733	4,857,998	6.1	334.26	0.001	0.02	Horizontal
HVAC28	Building N HVAC 08 (Carrier, 115K BTU)	503,732	4,857,993	6.1	334.26	0.001	0.02	Horizontal

Table 7. POINT SOURCE STACK PARAMETERS								
Release Point	**Description**	**UTM(a) Coordinates**		**Stack Height**	**Stack Gas Flow Temp.**	**Stack Gas Flow Velocity**	**Modeled Stack Diameter**	**Orient. Of Release**
		Easting-X (m)	**Northing-Y (m)**	**(m)**	**(K)**	**(m/sec)**	**(m)**	
HVAC29	Building N HVAC 09 (Carrier, 115K BTU)	503,731.30	4,857,985.40	6.1	334.26	0.001	0.02	Horizontal
HVAC30	Building N HVAC 10 (Carrier, 115K BTU)	503,741	4,857,993.42	6.1	334.26	0.001	0.02	Horizontal

[1] Point source DC03 also includes Seed Dryer 4A. Exhaust temperature is of the seed dryer. Including the stack parameter of DC03 in the parameters for Dryer 4A for informational purposes.
[2] Point source DC04 also includes Seed Dryer 4B. Exhaust temperature is of the seed dryer. Including the stack parameter of DC04 in the parameters for Dryer 4B for informational purposes.

Table 8. VOLUME AND AREA SOURCE RELEASE PARAMETERS						
Source	**Description**	**Easting**	**Northing**	**Release Height [3] (m)**	**Initial Vertical Dimension [4] (m)**	**Initial Horizontal Dimension[5] (m)**
DRYER02	Seed Dryer 02	504,027.80	4,857,914.70	3.66	5.88	1.70
DRYER03	Seed Dryer 03	503,970.00	4,858,023.00	3.66	1.91	1.70
HEAT01	BLDG Q Heaters	504,135.50	4,857,833.00	3.05	3.76	1.42
HEAT02	BLDG L Heaters	504,047.00	4,857,932.70	3.05	2.41	1.42

Notes:
[3] Height of building or middle of exhaust vents if horizontal exhaust
[4] Release height divided by 2.15
[5] Effective width of source divided by 4.3

__x___Thorough justification/documentation of release parameters for all modeled sources is provided in this section.

__x___The specific methods used to determine/calculate given release parameters is described in this section.

__X__The release orientation of all point source stacks (horizontal, rain-capped, or uninterrupted vertical release) has been verified and is documented in this section.

4.0 Modeling Methodology

Table 9 summarizes the key modeling parameters used in the impact analyses.

Table 9. MODELING PARAMETERS		
Parameter	**Description/Values**	**Documentation/Addition Description**
General Facility Location	Parma, Payette County, ID	Payette County is in attainment for all pollutants.
Model	AERMOD	AERMOD with the PRIME downwash algorithm, version 14134.
Meteorological Data	5 years of surface data and 5 years of upper air data from Boise, ID Station ID:24131	The meteorological model input files for this project were developed by DEQ. See Section 5.2 of this memorandum for additional details of the meteorological data.
Terrain	Considered	3-dimensional receptor coordinates were obtained from USGS National Elevation Dataset (NED) files and were used to establish elevation of ground level receptors. AERMAP was used to determine each receptor elevation and hill height scale.
Building Downwash	Considered	Plume downwash was considered for the structures associated with the facility. BPIP-PRIME was used to evaluate building dimensions for consideration of downwash effects in AERMOD.
NOx Chemistry	ARM2	The Tier 2 option, ARM2 was used for the 1-hour NO_2 SIL and NAAQS analysis.
Receptor Grid	**Significant Impact Analyses**	
	Grid 1	Discrete receptors 25 meters around, out to100 meters from the property line
	Grid 2	A 100-meter grid extended approximately 1 kilometer.
	Grid 3	A 500-meter grid extended approximately 5 kilometers.
	NAAQS Analyses	
	Same as grid used for Significant Impact Analyses	
	TAPs Analyses	
	TAP modeling was not required. See section 4.2 for explanation.	

4.1 Model Selection

The EPA-approved AERMOD (Version 14134) model was used. AERMOD was run with the following options.

- Regulatory default options,
- Direction-specific building downwash,
- Actual receptor elevations and hill height scales,
- Complex/intermediate terrain algorithms

__X__The current versions of all models and associated programs were used in analyses, or alternate versions were specifically approved by DEQ.

__X___Any non-default model options used were approved by DEQ in advance.

4.2 Meteorological Data

Most-recently processed Boise meteorological data was provided by DEQ with Protocol Approval Letter. This data was used in the air impact analyses. See AERMET_DEQ file on attached CD for meteorological data.

__X__Meteorological data files are provided with the application.

__n/a__If meteorological data used for modeling were not provided by DEQ, then a detailed discussion of the data is provided along with documentation of the processing steps.

4.3 Effects of Terrain

AERMAP (Version 11103) was used to process terrain elevation data for all sources, buildings and receptors using National Elevation Dataset files prepared by the USGS. AERMAP first determines the base elevation at each source and receptor. For complex terrain situations, AERMOD captures the physics of dispersion and creates elevation data for the surrounding terrain identified by a parameter called hill height scale. AERMAP creates hill height scale by searching for the terrain height and location that has the greatest influence on dispersion for each individual source and receptor. Both the base elevation and hill-height scale data are produced for each receptor by AERMAP as a file or files that can be directly accessed by AERMOD.

All receptors and source locations will be expressed in the Universal Transverse Mercator North American Datum 1983 (NAD83).

__X___The datum of terrain data, building corner locations, emissions sources, and the ambient air boundary are specified and are consistent such that the modeled plot plan accurately represents the facility and surroundings.

4.4 Facility Layout

A scaled facility plot plan with the modeling set-up is provided in Figure 4. The source locations were verified during a recent site visit and are shown as blue dots in Figure 4. The building footprints and property line used in the modeling are also shown in Figure 4.

Figure 4. Facility plot plan

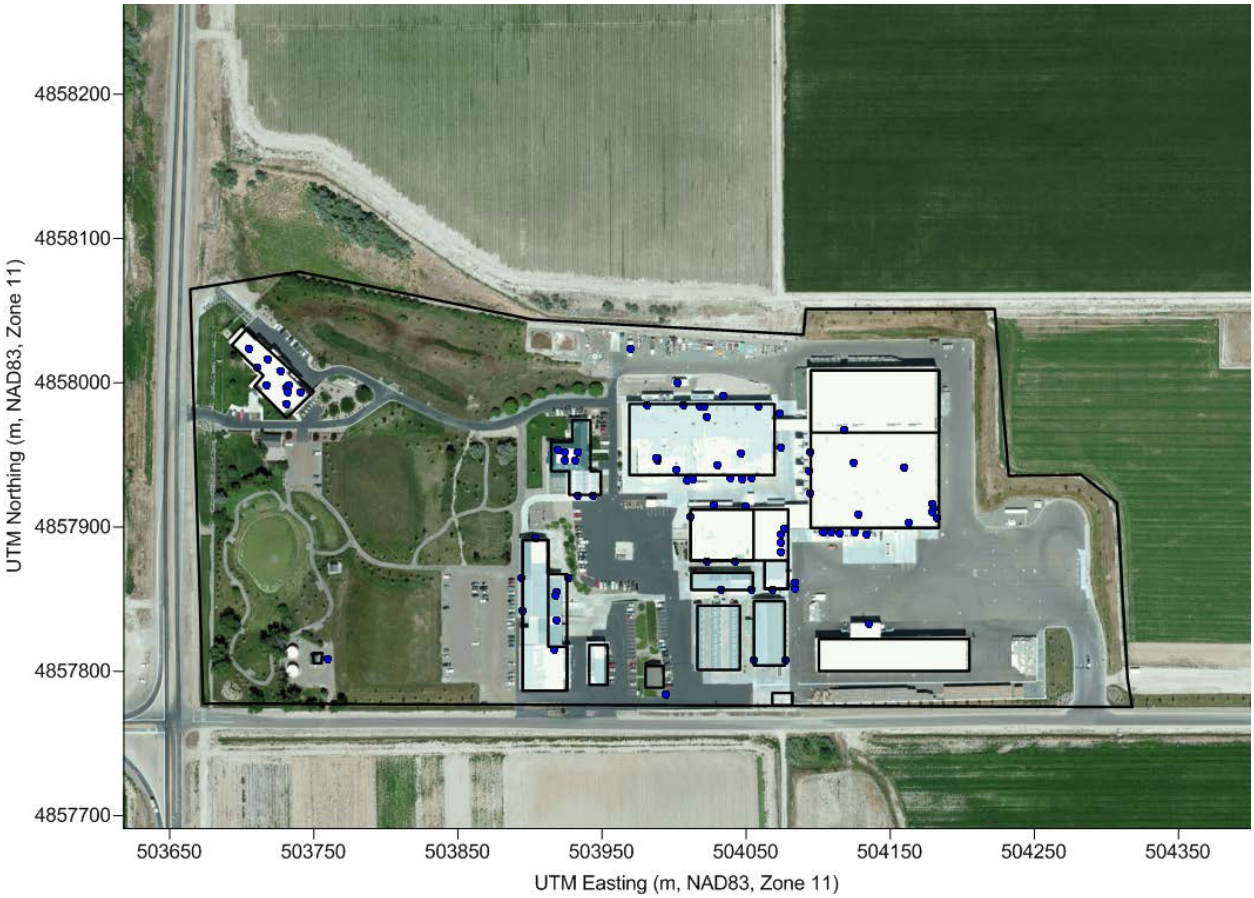

__X___The facility layout plot plan is provided in this section that clearly and accurately depicts buildings, emissions points, and the ambient air boundary.

__X___This section of the Modeling Report has thoroughly described how locations of emissions sources, building corners, and the ambient air boundary were determined, specifying the datum used.

_n/a___If any of the following apply, the effect on areas excluded from ambient air is thoroughly described in this section: a river/stream bisecting the facility; the facility is on leased property or is leasing property to another entity; the facility is not completely fenced; there are right-of-way areas on the facility; the nature of business is such that the general public have access to part or all of the facility.

__n/a___This section thoroughly describes how the facility can legally preclude public access (and practically preclude access) to areas excluded from ambient air in the modeling analyses.

4.7 Receptor Network

The ambient air boundary was the facility fenceline. The selection of receptors in AERMOD was as follows:

- Discrete Receptors 25 meters around, 100 meters out from the property line.
- A 100-meter grid extended approximately 1 kilometer.
- A 500-meter grid extended approximately 5 kilometers.

U.S. Geological Survey (USGS) National Elevation Dataset (NED) terrain data will be used to determine receptor elevations and terrain maxima. All modeled impacts over the SIL for the pollutants and averaging times modeled are within the 100-meter grid.

__x___This section of the Modeling Report provides justification that receptor spacing used in the air impact analyses was adequate to reasonably resolve the maximum modeled concentrations to the point that NAAQS or TAP compliance is assured.

4.8 Background Concentrations

Proposed rural background concentrations for criteria air pollutants are provided in Table 10. These concentrations were suggested by DEQ in the Protocol Approval Letter (Attachment B). DEQ used concentrations from the NWAIRQUEST design value concentration tool to generate appropriate background concentrations for the Nunhems site.

Table 10. BACKGROUND CONCENTRATIONS

Pollutant	1-hr	24-hr	Annual
NO_2	49 µg/m^3		5.6 µg/m^3
SO_2	5.5 µg/m^3		
PM_{10}		73 µg/m^3	
$PM_{2.5}$		19 µg/m^3	7.3 µg/m^3

__X__Background concentrations have been thoroughly documented and justified for all criteria pollutants where a cumulative NAAQS impact analysis was performed.

4.9 NOx Chemistry

The modeling analysis for NO_X followed the EPA recommended 3-tier approach to characterize the conversion of modeled total NO_X emissions to NO_2 concentration for comparison to the NAAQS (40CFR51 Appendix W).

Initially, the Tier 1 method for NO_X to NO_2 conversion performed for the 1-hour NO_2 NAAQS modeling assumed that the modeled emissions of NOx will completely convert to NO_2. This is an overly conservative assumption and resulted in a maximum 1-hour NO_2 impact of 353.9 µg/m^3. Next, the Tier 2

modeling options were used to refine the modeling impacts. The Tier 2 modeling options consist of the default ambient ratio method (ARM) and the Ambient Ratio Method Version 2 (ARM2). ARM accounts for the conversion of NO_X to NO_2 by assuming a constant ratio of 0.75 for NO_2/NO_X for the annual predicted impacts and 0.8 for 1-hr predicted impacts (EPA, 2010b). ARM2 performs a similar conversion but the ambient ratio is based on an evaluation of the ambient ratios of NO_2/NO_x from the EPA's Air Quality System (AQS) record of ambient air quality data instead of a fixed value (RTP, 2013). ARM2 was used instead of the default ARM ratios because the project's Tier 1 maximum modeled impacts for 1-hour NO_2 are between 150-200 ppb (282 -376 µg/m^3) of NO_x. In the *Clarification on the Use of AERMOD Dispersion Modeling for Demonstrating Compliance with the NO_2 National Ambient Air Quality Standard* guidance released in September 2014 the US EPA recommends the use of ARM2 for projects that fall in this range[1]. The default maximum NO_2/NO_X ratio of 0.9 for very low levels of NO_x and a default minimum ratio of 0.2 for high levels of NO_X were used. This method assumes that at least 98% of stacks have a default (0.5 NO_2/NO_X) in-stack ratio.

Since the project is under the NAAQS when cumulative impacts modeled using ARM2 are added to background, Tier 3 modeling using OLM or PVMRM was not necessary.

__N/A___If OLM or PVMRM was used to address NOx chemistry, reasons for selecting one algorithm over the other are provided in this section.

[1] U.S. Environmental Protection Agency (EPA). 2014. *Clarification on the Use of AERMOD Dispersion Modeling for Demonstrating Compliance with the NO_2 National Ambient Air Quality Standard*. Robert Chris Owen and Rodger Brode. Air Quality Modeling Group. September 30, 2014.

5.0 Results and Discussion

As described in the Modeling Protocol, the maximum predicted impacts from the facility were first compared to their respective significant impact levels (SIL). The maximum predicted impacts from the facility are above the SIL for 24-hour and annual $PM_{2.5}$, 24-hour PM_{10}, 1-hour and annual NO_2, so a refined analysis was conducted for these pollutants. The design value of the pollutant-modeled impacts were added to the IDEQ provided ambient background values and the sum was compared to the NAAQS. The analysis shows that 1-hour and annual NO_2, 24-hour and annual $PM_{2.5}$, and 24-hour PM_{10} would not violate their respective NAAQS.

5.1 Significant Impact Level Analyses

The maximum predicted impacts from the facility are above the SIL for 24-hour and annual $PM_{2.5}$, 24-hour PM_{10}, 1-hour and annual NO_2, so a refined analysis was conducted for these pollutants.

Table 11 provides results of the SIL analyses.

Table 11. RESULTS FOR SIGNIFICANT CONTRIBUTION ANALYSES

Pollutant	Averaging Period	Maximum Modeled Concentration ($\mu g/m^3$)[a]	Significant Contribution Level ($\mu g/m^3$)	Impact Percentage of Significant Contribution Level	Cumulative NAAQS Analysis Required
$PM_{2.5}$[b]	24-hour	9.8[g]	1.2	8.2	yes
	Annual	2.4[g]	0.3	7.9	yes
PM_{10}[c]	24-hour	44.4	5	8.9	yes
NO_2[d]	1-hour	142.7[g]	7.5	19.0	yes
	Annual	11.9	1	12.0	yes

[a.] Micrograms/cubic meter
[b.] Particulate matter with an aerodynamic diameter less than or equal to a nominal 2.5 micrometers.
[c.] Particulate matter with an aerodynamic diameter less than or equal to a nominal 10 micrometers.
[d.] Nitrogen dioxide.
[e.] Sulfur dioxide.
[f.] Carbon Monoxide.
[g.] Maximum 5-year means (or a lesser averaging period if less than 5 years of meteorological data were used in the analyses) of the maximum modeled concentration for each year modeled.

__x___Model input and output files for SIL analyses have been provided with the application, with descriptions of the analyses associated with those files.

5.1.2 Cumulative NAAQS Impact Analyses

The design value of the pollutant-modeled impacts were added to the IDEQ provided ambient background values and the sum was compared to the NAAQS. The analysis shows that 1-hour and annual NO_2, 24-hour and annual $PM_{2.5}$, and 24-hour PM_{10} would not violate their respective NAAQS.

Table 12 provides results of Cumulative NAAQS Impact analyses.

Table 12. RESULTS FOR CUMULATIVE NAAQS IMPACT ANALYSES

Pollutant	Averaging Period	Modeled Design Concentration ($\mu g/m^3$)[a]	Background Concentration ($\mu g/m^3$)	Total Impact ($\mu g/m^3$)	NAAQS ($\mu g/m^3$)
$PM_{2.5}$[b]	24-hour	6.45[e]	19	25.45[e]	35
	Annual	2.38[f]	7.3	9.7[f]	12
PM_{10}[c]	24-hour	26.7[g]	73	98.7[g]	150
NO_2[d]	1-hour	136.4[e]	49	185.4[e]	188
	Annual	11.98	5.6	17.58	100

[a.] Micrograms/cubic meter
[b.] Particulate matter with an aerodynamic diameter less than or equal to a nominal 2.5 micrometers.
[c.] Particulate matter with an aerodynamic diameter less than or equal to a nominal 10 micrometers.
[d.] Nitrogen dioxide, modeled using the tier 2 ARM2 option.
[e.] Maximum of 5-year means (or a lesser averaging period if less than 5 years of meteorological data were used in the analyses) of 8th highest modeled concentrations for each year modeled.
[f.] Maximum of 5-year means (or a lesser averaging period if less than 5 years of meteorological data were used in the analyses) of maximum modeled concentrations for each year modeled.
[g.] Maximum of 6th highest modeled concentrations for a 5-year period (or the maximum of the 2nd highest modeled concentrations if only 1 year of meteorological data are modeled).

__X___Model input and output files for the cumulative NAAQS impact analyses are provided with the application.

__X___If there were modeled NAAQS violations, all violations were analyzed and clearly show that the project did not significantly contribute to those modeled violations. If there were multiple violations at a given receptor, all cumulative impacts (including background) for the averaging period analyzed were ranked along with the project contribution, and the project contributions were below the applicable SIL. A table was included to show all ranked impacts above the NAAQS along with the project contribution.

5.2 TAP Impact Analyses

TAP analysis was not required. See section 4.2 for explanation.

Appendix J

Applicable Requirements 40 CFR 60 Supbart IIII

COPYRIGHT 2015 BY CH2M HILL, INC. • COMPANY CONFIDENTIAL

Title 40: Protection of Environment
Part 60,Subpart IIII—Standards of Performance for Stationary Compression Ignition Internal Combustion Engines

60.4200 Am I subject to this subpart?

(a) The provisions of this subpart are applicable to manufacturers, owners, and operators of stationary compression ignition (CI) internal combustion engines (ICE) and other persons as specified in paragraphs (a)(1) through (4) of this section. For the purposes of this subpart, the date that construction commences is the date the engine is ordered by the owner or operator.

(1) Manufacturers of stationary CI ICE with a displacement of less than 30 liters per cylinder where the model year is:

(i) 2007 or later, for engines that are not fire pump engines;

The engine manufacturer is Cummins, model year 2009, Model QSK50-G4 NR2, 1645 kW (2205 HP rating).

Emission Standards for Manufacturers

§ 60.4205 What emission standards must I meet for emergency engines if I am an owner or operator of a stationary CI internal combustion engine?

(a) Owners and operators of pre-2007 model year emergency stationary CI ICE with a displacement of less than 10 liters per cylinder that are not fire pump engines must comply with the emission standards in table 1 to this subpart. Owners and operators of pre-2007 model year non-emergency stationary CI ICE with a displacement of greater than or equal to 10 liters per cylinder and less than 30 liters per cylinder that are not fire pump engines must comply with the emission standards in 40 CFR 94.8(a)(1).

(b) Owners and operators of 2007 model year and later emergency stationary CI ICE with a displacement of less than 30 liters per cylinder that are not fire pump engines must comply with the emission standards for new nonroad CI engines in §60.4202, for all pollutants, for the same model year and maximum engine power for their 2007 model year and later emergency stationary CI ICE.

1645 kW rated emergency standby generator with total displacement = 50.2 liters/ 16 cylinders = 3.14 liter/cylinder. (See manufacturer data sheet in PTC application)

Comply with emission standards (Table 1 per 40 CFR 89.112): NHMC + NOx = 6.4 g/kw-hr; CO = 3.5 g/kw-hr; PM= 0.20 g/kw-hr (See emission calculations for emergency generators in PTC application)

(c) Owners and operators of fire pump engines with a displacement of less than 30 liters per cylinder must comply with the emission standards in table 4 to this subpart, for all pollutants.

(d) Owners and operators of emergency stationary CI ICE with a displacement of greater than or equal to 30 liters per cylinder must meet the requirements in paragraphs (d)(1) and (2) of this section.

(1) Reduce NO_X emissions by 90 percent or more, or limit the emissions of NO_Xin the stationary CI internal combustion engine exhaust to 1.6 grams per KW-hour (1.2 grams per HP-hour).

(2) Reduce PM emissions by 60 percent or more, or limit the emissions of PM in the stationary CI internal combustion engine exhaust to 0.15 g/KW-hr (0.11 g/HP-hr).

§ 60.4202 What emission standards must I meet for emergency engines if I am a stationary CI internal combustion engine manufacturer?

(a) Stationary CI internal combustion engine manufacturers must certify their 2007 model year and later emergency stationary CI ICE with a maximum engine power less than or equal to 2,237 KW (3,000 HP) and a displacement of less than 10 liters per cylinder that are not fire pump engines to the emission standards specified in paragraphs (a)(1) through (2) of this section.

(1) For engines with a maximum engine power less than 37 KW (50 HP):

(i) The certification emission standards for new nonroad CI engines for the same model year and maximum engine power in 40 CFR 89.112 and 40 CFR 89.113 for all pollutants for model year 2007 engines, and

(ii) The certification emission standards for new nonroad CI engines in 40 CFR 1039.104, 40 CFR 1039.105, 40 CFR 1039.107, 40 CFR 1039.115, and table 2 to this subpart, for 2008 model year and later engines.

(2) For engines with a maximum engine power greater than or equal to 37 KW (50 HP), the certification emission standards for new nonroad CI engines for the same model year and maximum engine power in 40 CFR 89.112 and 40 CFR 89.113 for all pollutants beginning in model year 2007.

1645 kW rated emergency standby generator with total displacement = 50.2 liters/ 16 cylinders = 3.14 liter/cylinder. (See manufacturer data sheet in PTC application)

Comply with emission standards (Table 1 per 40 CFR 89.112): NHMC + NOx = 6.4 g/kw-hr; CO = 3.5 g/kw-hr; PM= 0.20 g/kw-hr (See emission calculations for emergency generators in PTC application)

(b) Stationary CI internal combustion engine manufacturers must certify their 2007 model year and later emergency stationary CI ICE with a maximum engine power greater than 2,237 KW (3,000 HP) and a displacement of less than 10 liters per cylinder that are not fire pump engines to the emission standards specified in paragraphs (b)(1) through (2) of this section.

(1) For 2007 through 2010 model years, the emission standards in table 1 to this subpart, for all pollutants, for the same maximum engine power.

(2) For 2011 model year and later, the certification emission standards for new nonroad CI engines for engines of the same model year and maximum engine power in 40 CFR 89.112 and 40 CFR 89.113 for all pollutants.

(c) Stationary CI internal combustion engine manufacturers must certify their 2007 model year and later emergency stationary CI ICE with a displacement of greater than or equal to 10 liters per cylinder and less than 30 liters per cylinder that are not fire pump engines to the certification emission standards for new marine CI engines in 40 CFR 94.8, as applicable, for all pollutants, for the same displacement and maximum engine power.

(d) Beginning with the model years in table 3 to this subpart, stationary CI internal combustion engine manufacturers must certify their fire pump stationary CI ICE to the emission standards in table 4 to this subpart, for all pollutants, for the same model year and NFPA nameplate power.

§ 60.4206 How long must I meet the emission standards if I am an owner or operator of a stationary CI internal combustion engine?

Owners and operators of stationary CI ICE must operate and maintain stationary CI ICE that achieve the emission standards as required in §§60.4204 and 60.4205 according to the manufacturer's written instructions or procedures developed by the owner or operator that are approved by the engine manufacturer, over the entire life of the engine.

Fuel Requirements for Owners and Operators

§ 60.4207 What fuel requirements must I meet if I am an owner or operator of a stationary CI internal combustion engine subject to this subpart?

(a) Beginning October 1, 2007, owners and operators of stationary CI ICE subject to this subpart that use diesel fuel must use diesel fuel that meets the requirements of 40 CFR 80.510(a).

(b) Beginning October 1, 2010, owners and operators of stationary CI ICE subject to this subpart with a displacement of less than 30 liters per cylinder that use diesel fuel must use diesel fuel that meets the requirements of 40 CFR 80.510(b) for nonroad diesel fuel.

The emergency generator will be required to use ultra low sulfur diesel fuel with a maximum sulfur content of 15 ppmV.

(c) Owners and operators of pre-2011 model year stationary CI ICE subject to this subpart may petition the Administrator for approval to use remaining non-compliant fuel that does not meet the fuel requirements of paragraphs (a) and (b) of this section beyond the dates required for the purpose of using up existing fuel inventories. If approved, the petition will be valid for a period of up to 6 months. If additional time is needed, the owner or operator is required to submit a new petition to the Administrator.

(d) Owners and operators of pre-2011 model year stationary CI ICE subject to this subpart that are located in areas of Alaska not accessible by the Federal Aid Highway System may petition the Administrator for approval to use any fuels mixed with used lubricating oil that do not meet the fuel requirements of paragraphs (a) and (b) of this section. Owners and operators must demonstrate in their petition to the Administrator that there is no other place to use the lubricating oil. If approved, the petition will be valid for a period of up to 6 months. If additional time is needed, the owner or operator is required to submit a new petition to the Administrator.

(e) Stationary CI ICE that have a national security exemption under §60.4200(d) are also exempt from the fuel requirements in this section.

Other Requirements for Owners and Operators

§ 60.4208 What is the deadline for importing or installing stationary CI ICE produced in the previous model year?

(a) After December 31, 2008, owners and operators may not install stationary CI ICE (excluding fire pump engines) that do not meet the applicable requirements for 2007 model year engines.

(b) After December 31, 2009, owners and operators may not install stationary CI ICE with a maximum engine power of less than 19 KW (25 HP) (excluding fire pump engines) that do not meet the applicable requirements for 2008 model year engines.

(c) After December 31, 2014, owners and operators may not install non-emergency stationary CI ICE with a maximum engine power of greater than or equal to 19 KW (25 HP) and less than 56 KW (75 HP) that do not meet the applicable requirements for 2013 model year non-emergency engines.

(d) After December 31, 2013, owners and operators may not install non-emergency stationary CI ICE with a maximum engine power of greater than or equal to 56 KW (75 HP) and less than 130 KW (175 HP) that do not meet the applicable requirements for 2012 model year non-emergency engines.

(e) After December 31, 2012, owners and operators may not install non-emergency stationary CI ICE with a maximum engine power of greater than or equal to 130 KW (175 HP), including those above 560 KW (750 HP), that do not meet the applicable requirements for 2011 model year non-emergency engines.

(f) After December 31, 2016, owners and operators may not install non-emergency stationary CI ICE with a maximum engine power of greater than or equal to 560 KW (750 HP) that do not meet the applicable requirements for 2015 model year non-emergency engines.

(g) In addition to the requirements specified in §§60.4201, 60.4202, 60.4204, and 60.4205, it is prohibited to import stationary CI ICE with a displacement of less than 30 liters per cylinder that do not meet the applicable requirements specified in paragraphs (a) through (f) of this section after the dates specified in paragraphs (a) through (f) of this section.

(h) The requirements of this section do not apply to owners or operators of stationary CI ICE that have been modified, reconstructed, and do not apply to engines that were removed from one existing location and reinstalled at a new location.

§ 60.4209 What are the monitoring requirements if I am an owner or operator of a stationary CI internal combustion engine?

If you are an owner or operator, you must meet the monitoring requirements of this section. In addition, you must also meet the monitoring requirements specified in §60.4211.

(a) If you are an owner or operator of an emergency stationary CI internal combustion engine, you must install a non-resettable hour meter prior to startup of the engine.

A non-resettable hour meter will be installed on the emergency generator

(b) If you are an owner or operator of a stationary CI internal combustion engine equipped with a diesel particulate filter to comply with the emission standards in §60.4204, the diesel particulate filter must be installed with a backpressure monitor that notifies the owner or operator when the high backpressure limit of the engine is approached.

Compliance Requirements

§ 60.4210 What are my compliance requirements if I am a stationary CI internal combustion engine manufacturer?

(a) Stationary CI internal combustion engine manufacturers must certify their stationary CI ICE with a displacement of less than 10 liters per cylinder to the emission standards specified in §60.4201(a) through (c) and §60.4202(a), (b) and (d) using the certification procedures required in 40 CFR part 89, subpart B, or 40 CFR part 1039, subpart C, as applicable, and must test their engines as specified in those parts. For the purposes of this subpart, engines certified to the standards in table 1 to this subpart shall be subject to the same requirements as engines certified to the standards in 40 CFR part 89. For the purposes of this subpart, engines certified to the standards in table 4 to this subpart shall be subject to the same requirements as engines certified to the standards in 40 CFR part 89, except that engines with NFPA nameplate power of less than 37 KW (50 HP) certified to model year 2011 or later standards shall be subject to the same requirements as engines certified to the standards in 40 CFR part 1039.

(b) Stationary CI internal combustion engine manufacturers must certify their stationary CI ICE with a displacement of greater than or equal to 10 liters per cylinder and less than 30 liters per cylinder to the emission standards specified in §60.4201(d) and §60.4202(c) using the certification procedures required in 40 CFR part 94 subpart C, and must test their engines as specified in 40 CFR part 94.

(c) Stationary CI internal combustion engine manufacturers must meet the requirements of 40 CFR 1039.120, 40 CFR 1039.125, 40 CFR 1039.130, 40 CFR 1039.135, and 40 CFR part 1068 for engines that are certified to the emission standards in 40 CFR part 1039. Stationary CI internal combustion engine manufacturers must meet the corresponding provisions of 40 CFR part 89 or 40 CFR part 94 for engines that would be covered by that part if they were nonroad (including marine) engines. Labels on such engines must refer to stationary engines, rather than or in addition to nonroad or marine engines, as appropriate. Stationary CI internal combustion engine manufacturers must label their engines according to paragraphs (c)(1) through (3) of this section.

(1) Stationary CI internal combustion engines manufactured from January 1, 2006 to March 31, 2006 (January 1, 2006 to June 30, 2006 for fire pump engines), other than those that are part of certified engine families under the nonroad CI engine regulations, must be labeled according to 40 CFR 1039.20.

(2) Stationary CI internal combustion engines manufactured from April 1, 2006 to December 31, 2006 (or, for fire pump engines, July 1, 2006 to December 31 of the year preceding the year listed in table 3 to this subpart) must be labeled according to paragraphs (c)(2)(i) through (iii) of this section:

(i) Stationary CI internal combustion engines that are part of certified engine families under the nonroad regulations must meet the labeling requirements for nonroad CI engines, but do not have to meet the labeling requirements in 40 CFR 1039.20.

(ii) Stationary CI internal combustion engines that meet Tier 1 requirements (or requirements for fire pumps) under this subpart, but do not meet the requirements applicable to nonroad CI engines must be labeled according to 40 CFR 1039.20. The engine manufacturer may add language to the label clarifying that the engine meets Tier 1 requirements (or requirements for fire pumps) of this subpart.

(iii) Stationary CI internal combustion engines manufactured after April 1, 2006 that do not meet Tier 1 requirements of this subpart, or fire pumps engines manufactured after July 1, 2006 that do not meet the requirements for fire pumps under this subpart, may not be used in the U.S. If any such engines are manufactured in the U.S. after April 1, 2006 (July 1, 2006 for fire pump engines), they must be exported or must be brought into compliance with the appropriate standards prior to initial operation. The export provisions of 40 CFR 1068.230 would apply to engines for export and the manufacturers must label such engines according to 40 CFR 1068.230.

(3) Stationary CI internal combustion engines manufactured after January 1, 2007 (for fire pump engines, after January 1 of the year listed in table 3 to this subpart, as applicable) must be labeled according to paragraphs (c)(3)(i) through (iii) of this section.

(i) Stationary CI internal combustion engines that meet the requirements of this subpart and the corresponding requirements for nonroad (including marine) engines of the same model year and HP must be labeled according to the provisions in part 89, 94 or 1039, as appropriate.

(ii) Stationary CI internal combustion engines that meet the requirements of this subpart, but are not certified to the standards applicable to nonroad (including marine) engines of the same model year and HP must be labeled according to the provisions in part 89, 94 or 1039, as appropriate, but the words “stationary” must be included instead of “nonroad” or “marine” on the label. In addition, such engines must be labeled according to 40 CFR 1039.20.

(iii) Stationary CI internal combustion engines that do not meet the requirements of this subpart must be labeled according to 40 CFR 1068.230 and must be exported under the provisions of 40 CFR 1068.230.

(d) An engine manufacturer certifying an engine family or families to standards under this subpart that are identical to standards applicable under parts 89, 94, or 1039 for that model year may certify any such family that contains both nonroad (including marine) and stationary engines as a single engine family and/or may include any such family containing stationary engines in the averaging, banking and trading provisions applicable for such engines under those parts.

(e) Manufacturers of engine families discussed in paragraph (d) of this section may meet the labeling requirements referred to in paragraph (c) of this section for stationary CI ICE by either adding a separate label containing the information required in paragraph (c) of this section or by adding the words “and stationary” after the word “nonroad” or “marine,” as appropriate, to the label.

(f) Starting with the model years shown in table 5 to this subpart, stationary CI internal combustion engine manufacturers must add a permanent label stating that the engine is for stationary emergency use only to each new emergency stationary CI internal combustion engine greater than or equal to 19 KW (25 HP) that meets all the emission standards for emergency engines in §60.4202 but does not meet all the emission standards for non-emergency engines in §60.4201. The label must be added according to the labeling requirements specified in 40 CFR 1039.135(b). Engine manufacturers must specify in the owner's manual that operation of emergency engines is limited to emergency operations and required maintenance and testing.

(g) Manufacturers of fire pump engines may use the test cycle in table 6 to this subpart for testing fire pump engines and may test at the NFPA certified nameplate HP, provided that the engine is labeled as “Fire Pump Applications Only”.

(h) Engine manufacturers, including importers, may introduce into commerce uncertified engines or engines certified to earlier standards that were manufactured before the new or changed standards took effect until inventories are depleted, as long as such engines are part of normal inventory. For example, if the engine manufacturers' normal industry practice is to keep on hand a one-month supply of engines based on its projected sales, and a new tier of standards starts to apply for the 2009 model year, the engine manufacturer may manufacture engines based on the normal inventory requirements late in the 2008 model year, and sell those engines for installation. The engine manufacturer may not circumvent the provisions of §§60.4201 or 60.4202 by stockpiling engines that are built before new or changed standards take effect. Stockpiling of such engines beyond normal industry practice is a violation of this subpart.

(i) The replacement engine provisions of 40 CFR 89.1003(b)(7), 40 CFR 94.1103(b)(3), 40 CFR 94.1103(b)(4) and 40 CFR 1068.240 are applicable to stationary CI engines replacing existing equipment that is less than 15 years old.

§ 60.4211 What are my compliance requirements if I am an owner or operator of a stationary CI internal combustion engine?

(a) If you are an owner or operator and must comply with the emission standards specified in this subpart, you must operate and maintain the stationary CI internal combustion engine and control device according to the manufacturer's written instructions or procedures developed by the owner or operator that are approved by the engine manufacturer. In addition, owners and operators may only change those settings that are permitted by the manufacturer. You must also meet the requirements of 40 CFR parts 89, 94 and/or 1068, as they apply to you.

(b) If you are an owner or operator of a pre-2007 model year stationary CI internal combustion engine and must comply with the emission standards specified in §§60.4204(a) or 60.4205(a), or if you are an owner or operator of a CI fire pump engine that is manufactured prior to the model years in table 3 to this subpart and must comply with the emission standards specified in §60.4205(c), you must demonstrate compliance according to one of the methods specified in paragraphs (b)(1) through (5) of this section.

(1) Purchasing an engine certified according to 40 CFR part 89 or 40 CFR part 94, as applicable, for the same model year and maximum engine power. The engine must be installed and configured according to the manufacturer's specifications.

(2) Keeping records of performance test results for each pollutant for a test conducted on a similar engine. The test must have been conducted using the same methods specified in this subpart and these methods must have been followed correctly.

(3) Keeping records of engine manufacturer data indicating compliance with the standards.

(4) Keeping records of control device vendor data indicating compliance with the standards.

(5) Conducting an initial performance test to demonstrate compliance with the emission standards according to the requirements specified in §60.4212, as applicable.

(c) If you are an owner or operator of a 2007 model year and later stationary CI internal combustion engine and must comply with the emission standards specified in §60.4204(b) or §60.4205(b), or if you are an owner or operator of a CI fire pump engine that is manufactured during or after the model year that applies to your fire pump engine power rating in table 3 to this subpart and must comply with the emission standards specified in §60.4205(c), you must comply by purchasing an engine certified to the emission standards in §60.4204(b), or §60.4205(b) or (c), as applicable, for the same model year and maximum (or in the case of fire pumps, NFPA nameplate) engine power. The engine must be installed and configured according to the manufacturer's specifications.

(d) If you are an owner or operator and must comply with the emission standards specified in §60.4204(c) or §60.4205(d), you must demonstrate compliance according to the requirements specified in paragraphs (d)(1) through (3) of this section.

(1) Conducting an initial performance test to demonstrate initial compliance with the emission standards as specified in §60.4213.

(2) Establishing operating parameters to be monitored continuously to ensure the stationary internal combustion engine continues to meet the emission standards. The owner or operator must petition the Administrator for approval of operating parameters to be monitored continuously. The petition must include the information described in paragraphs (d)(2)(i) through (v) of this section.

(i) Identification of the specific parameters you propose to monitor continuously;

(ii) A discussion of the relationship between these parameters and NO_X and PM emissions, identifying how the emissions of these pollutants change with changes in these parameters, and how limitations on these parameters will serve to limit NO_X and PM emissions;

(iii) A discussion of how you will establish the upper and/or lower values for these parameters which will establish the limits on these parameters in the operating limitations;

(iv) A discussion identifying the methods and the instruments you will use to monitor these parameters, as well as the relative accuracy and precision of these methods and instruments; and

(v) A discussion identifying the frequency and methods for recalibrating the instruments you will use for monitoring these parameters.

(3) For non-emergency engines with a displacement of greater than or equal to 30 liters per cylinder, conducting annual performance tests to demonstrate continuous compliance with the emission standards as specified in §60.4213.

(e) Emergency stationary ICE may be operated for the purpose of maintenance checks and readiness testing, provided that the tests are recommended by Federal, State, or local government, the manufacturer, the vendor, or the insurance company associated with the engine. Maintenance checks and readiness testing of such units is limited to 100 hours per year. There is no time limit on the use of emergency stationary ICE in emergency situations. Anyone may petition the Administrator for approval of additional hours to be used for maintenance checks and readiness testing, but a petition is not required if the owner or operator maintains records indicating that Federal, State, or local standards require maintenance and testing of emergency ICE beyond 100 hours per year. For owners and operators of emergency engines meeting standards under §60.4205 but not §60.4204, any operation other than emergency operation, and maintenance and testing as permitted in this section, is prohibited.

Maintenance and testing hours of operation for the emergency generator will not exceed 100 hr/yr.

Testing Requirements for Owners and Operators

§ 60.4212 What test methods and other procedures must I use if I am an owner or operator of a stationary CI internal combustion engine with a displacement of less than 30 liters per cylinder?

Owners and operators of stationary CI ICE with a displacement of less than 30 liters per cylinder who conduct performance tests pursuant to this subpart must do so according to paragraphs (a) through (d) of this section.

(a) The performance test must be conducted according to the in-use testing procedures in 40 CFR part 1039, subpart F.

(b) Exhaust emissions from stationary CI ICE that are complying with the emission standards for new CI engines in 40 CFR part 1039 must not exceed the not-to-exceed (NTE) standards for the same model year and maximum engine power as required in 40 CFR 1039.101(e) and 40 CFR 1039.102(g)(1), except as specified in 40 CFR 1039.104(d). This requirement starts when NTE requirements take effect for nonroad diesel engines under 40 CFR part 1039.

(c) Exhaust emissions from stationary CI ICE that are complying with the emission standards for new CI engines in 40 CFR 89.112 or 40 CFR 94.8, as applicable, must not exceed the NTE numerical requirements, rounded to the same number of decimal places as the applicable standard in 40 CFR 89.112 or 40 CFR 94.8, as applicable, determined from the following equation:

$$\text{NTE requirement for each pollutant} = (1.25) \times (\text{STD}) \qquad \text{(Eq. 1)}$$

Where:

STD = The standard specified for that pollutant in 40 CFR 89.112 or 40 CFR 94.8, as applicable.

Alternatively, stationary CI ICE that are complying with the emission standards for new CI engines in 40 CFR 89.112 or 40 CFR 94.8 may follow the testing procedures specified in §60.4213 of this subpart, as appropriate.

(d) Exhaust emissions from stationary CI ICE that are complying with the emission standards for pre-2007 model year engines in §60.4204(a), §60.4205(a), or §60.4205(c) must not exceed the NTE numerical requirements, rounded to the same number of decimal places as the applicable standard in §60.4204(a), §60.4205(a), or §60.4205(c), determined from the equation in paragraph (c) of this section.

Where:

STD = The standard specified for that pollutant in §60.4204(a), §60.4205(a), or §60.4205(c).

Alternatively, stationary CI ICE that are complying with the emission standards for pre-2007 model year engines in §60.4204(a), §60.4205(a), or §60.4205(c) may follow the testing procedures specified in §60.4213, as appropriate.

Notification, Reports, and Records for Owners and Operators

§ 60.4214 What are my notification, reporting, and recordkeeping requirements if I am an owner or operator of a stationary CI internal combustion engine?

(a) Owners and operators of non-emergency stationary CI ICE that are greater than 2,237 KW (3,000 HP), or have a displacement of greater than or equal to 10 liters per cylinder, or are pre-2007 model year engines that are greater than 130 KW (175 HP) and not certified, must meet the requirements of paragraphs (a)(1) and (2) of this section.

(1) Submit an initial notification as required in §60.7(a)(1). The notification must include the information in paragraphs (a)(1)(i) through (v) of this section.

(i) Name and address of the owner or operator;

(ii) The address of the affected source;

(iii) Engine information including make, model, engine family, serial number, model year, maximum engine power, and engine displacement;

(iv) Emission control equipment; and

(v) Fuel used.

(2) Keep records of the information in paragraphs (a)(2)(i) through (iv) of this section.

(i) All notifications submitted to comply with this subpart and all documentation supporting any notification.

(ii) Maintenance conducted on the engine.

(iii) If the stationary CI internal combustion is a certified engine, documentation from the manufacturer that the engine is certified to meet the emission standards.

(iv) If the stationary CI internal combustion is not a certified engine, documentation that the engine meets the emission standards.

(b) If the stationary CI internal combustion engine is an emergency stationary internal combustion engine, the owner or operator is not required to submit an initial notification. Starting with the model years in table 5 to this subpart, if the emergency engine does not meet the standards applicable to non-emergency engines in the applicable model year, the owner or operator must keep records of the operation of the engine in emergency and non-emergency service that are recorded through the non-resettable hour meter. The owner must record the time of operation of the engine and the reason the engine was in operation during that time.

(c) If the stationary CI internal combustion engine is equipped with a diesel particulate filter, the owner or operator must keep records of any corrective action taken after the backpressure monitor has notified the owner or operator that the high backpressure limit of the engine is approached.

Title 40: Protection of Environment
Part 60,Subpart IIII—Standards of Performance for Stationary Compression Ignition Internal Combustion Engines

60.4200 Am I subject to this subpart?

(a) The provisions of this subpart are applicable to manufacturers, owners, and operators of stationary compression ignition (CI) internal combustion engines (ICE) and other persons as specified in paragraphs (a)(1) through (4) of this section. For the purposes of this subpart, the date that construction commences is the date the engine is ordered by the owner or operator.

(1) Manufacturers of stationary CI ICE with a displacement of less than 30 liters per cylinder where the model year is:

(i) 2007 or later, for engines that are not fire pump engines;

The engine manufacturer is Caterpillar, model year 2008, Model C9 ATAAC, 250 kW (398 HP rating), EPA Tier 3.

Emission Standards for Manufacturers

§ 60.4205 What emission standards must I meet for emergency engines if I am an owner or operator of a stationary CI internal combustion engine?

(a) Owners and operators of pre-2007 model year emergency stationary CI ICE with a displacement of less than 10 liters per cylinder that are not fire pump engines must comply with the emission standards in table 1 to this subpart. Owners and operators of pre-2007 model year non-emergency stationary CI ICE with a displacement of greater than or equal to 10 liters per cylinder and less than 30 liters per cylinder that are not fire pump engines must comply with the emission standards in 40 CFR 94.8(a)(1).

(b) Owners and operators of 2007 model year and later emergency stationary CI ICE with a displacement of less than 30 liters per cylinder that are not fire pump engines must comply with the emission standards for new nonroad CI engines in §60.4202, for all pollutants, for the same model year and maximum engine power for their 2007 model year and later emergency stationary CI ICE.

250 kW rated emergency standby generator with total displacement = 8.8 liters/ 6 cylinders = 1.47 liter/cylinder. (See manufacturer data sheet in PTC application)

Comply with emission standards (Table 1 per 40 CFR 89.112): NHMC + NOx = 4.0 g/kw-hr; CO = 3.5 g/kw-hr; PM= 0.20 g/kw-hr (See emission calculations for emergency generators in PTC application)

(c) Owners and operators of fire pump engines with a displacement of less than 30 liters per cylinder must comply with the emission standards in table 4 to this subpart, for all pollutants.

(d) Owners and operators of emergency stationary CI ICE with a displacement of greater than or equal to 30 liters per cylinder must meet the requirements in paragraphs (d)(1) and (2) of this section.

(1) Reduce NO_X emissions by 90 percent or more, or limit the emissions of NO_Xin the stationary CI internal combustion engine exhaust to 1.6 grams per KW-hour (1.2 grams per HP-hour).

(2) Reduce PM emissions by 60 percent or more, or limit the emissions of PM in the stationary CI internal combustion engine exhaust to 0.15 g/KW-hr (0.11 g/HP-hr).

§ 60.4202 What emission standards must I meet for emergency engines if I am a stationary CI internal combustion engine manufacturer?

(a) Stationary CI internal combustion engine manufacturers must certify their 2007 model year and later emergency stationary CI ICE with a maximum engine power less than or equal to 2,237 KW (3,000 HP) and a displacement of less than 10 liters per cylinder that are not fire pump engines to the emission standards specified in paragraphs (a)(1) through (2) of this section.

(1) For engines with a maximum engine power less than 37 KW (50 HP):

(i) The certification emission standards for new nonroad CI engines for the same model year and maximum engine power in 40 CFR 89.112 and 40 CFR 89.113 for all pollutants for model year 2007 engines, and

(ii) The certification emission standards for new nonroad CI engines in 40 CFR 1039.104, 40 CFR 1039.105, 40 CFR 1039.107, 40 CFR 1039.115, and table 2 to this subpart, for 2008 model year and later engines.

(2) For engines with a maximum engine power greater than or equal to 37 KW (50 HP), the certification emission standards for new nonroad CI engines for the same model year and maximum engine power in 40 CFR 89.112 and 40 CFR 89.113 for all pollutants beginning in model year 2007.

250 kW rated emergency standby generator with total displacement = 8.8 liters/ 6 cylinders = 1.47 liter/cylinder. (See manufacturer data sheet in PTC application)

Comply with emission standards (Table 1 per 40 CFR 89.112): NHMC + NOx = 4.0 g/kw-hr; CO = 3.5 g/kw-hr; PM= 0.20 g/kw-hr (See emission calculations for emergency generators in PTC application)

(b) Stationary CI internal combustion engine manufacturers must certify their 2007 model year and later emergency stationary CI ICE with a maximum engine power greater than 2,237 KW (3,000 HP) and a displacement of less than 10 liters per cylinder that are not fire pump engines to the emission standards specified in paragraphs (b)(1) through (2) of this section.

(1) For 2007 through 2010 model years, the emission standards in table 1 to this subpart, for all pollutants, for the same maximum engine power.

(2) For 2011 model year and later, the certification emission standards for new nonroad CI engines for engines of the same model year and maximum engine power in 40 CFR 89.112 and 40 CFR 89.113 for all pollutants.

(c) Stationary CI internal combustion engine manufacturers must certify their 2007 model year and later emergency stationary CI ICE with a displacement of greater than or equal to 10 liters per cylinder and less than 30 liters per cylinder that are not fire pump engines to the certification emission standards for new marine CI engines in 40 CFR 94.8, as applicable, for all pollutants, for the same displacement and maximum engine power.

(d) Beginning with the model years in table 3 to this subpart, stationary CI internal combustion engine manufacturers must certify their fire pump stationary CI ICE to the emission standards in table 4 to this subpart, for all pollutants, for the same model year and NFPA nameplate power.

§ 60.4206 How long must I meet the emission standards if I am an owner or operator of a stationary CI internal combustion engine?

Owners and operators of stationary CI ICE must operate and maintain stationary CI ICE that achieve the emission standards as required in §§60.4204 and 60.4205 according to the manufacturer's written instructions or procedures developed by the owner or operator that are approved by the engine manufacturer, over the entire life of the engine.

Fuel Requirements for Owners and Operators

§ 60.4207 What fuel requirements must I meet if I am an owner or operator of a stationary CI internal combustion engine subject to this subpart?

(a) Beginning October 1, 2007, owners and operators of stationary CI ICE subject to this subpart that use diesel fuel must use diesel fuel that meets the requirements of 40 CFR 80.510(a).

(b) Beginning October 1, 2010, owners and operators of stationary CI ICE subject to this subpart with a displacement of less than 30 liters per cylinder that use diesel fuel must use diesel fuel that meets the requirements of 40 CFR 80.510(b) for nonroad diesel fuel.

The emergency generator will be required to use ultra low sulfur diesel fuel with a maximum sulfur content of 15 ppmV.

(c) Owners and operators of pre-2011 model year stationary CI ICE subject to this subpart may petition the Administrator for approval to use remaining non-compliant fuel that does not meet the fuel requirements of paragraphs (a) and (b) of this section beyond the dates required for the purpose of using up existing fuel inventories. If approved, the petition will be valid for a period of up to 6 months. If additional time is needed, the owner or operator is required to submit a new petition to the Administrator.

(d) Owners and operators of pre-2011 model year stationary CI ICE subject to this subpart that are located in areas of Alaska not accessible by the Federal Aid Highway System may petition the Administrator for approval to use any fuels mixed with used lubricating oil that do not meet the fuel requirements of paragraphs (a) and (b) of this section. Owners and operators must demonstrate in their petition to the Administrator that there is no other place to use the lubricating oil. If approved, the petition will be valid for a period of up to 6 months. If additional time is needed, the owner or operator is required to submit a new petition to the Administrator.

(e) Stationary CI ICE that have a national security exemption under §60.4200(d) are also exempt from the fuel requirements in this section.

Other Requirements for Owners and Operators

§ 60.4208 What is the deadline for importing or installing stationary CI ICE produced in the previous model year?

(a) After December 31, 2008, owners and operators may not install stationary CI ICE (excluding fire pump engines) that do not meet the applicable requirements for 2007 model year engines.

(b) After December 31, 2009, owners and operators may not install stationary CI ICE with a maximum engine power of less than 19 KW (25 HP) (excluding fire pump engines) that do not meet the applicable requirements for 2008 model year engines.

(c) After December 31, 2014, owners and operators may not install non-emergency stationary CI ICE with a maximum engine power of greater than or equal to 19 KW (25 HP) and less than 56 KW (75 HP) that do not meet the applicable requirements for 2013 model year non-emergency engines.

(d) After December 31, 2013, owners and operators may not install non-emergency stationary CI ICE with a maximum engine power of greater than or equal to 56 KW (75 HP) and less than 130 KW (175 HP) that do not meet the applicable requirements for 2012 model year non-emergency engines.

(e) After December 31, 2012, owners and operators may not install non-emergency stationary CI ICE with a maximum engine power of greater than or equal to 130 KW (175 HP), including those above 560 KW (750 HP), that do not meet the applicable requirements for 2011 model year non-emergency engines.

(f) After December 31, 2016, owners and operators may not install non-emergency stationary CI ICE with a maximum engine power of greater than or equal to 560 KW (750 HP) that do not meet the applicable requirements for 2015 model year non-emergency engines.

(g) In addition to the requirements specified in §§60.4201, 60.4202, 60.4204, and 60.4205, it is prohibited to import stationary CI ICE with a displacement of less than 30 liters per cylinder that do not meet the applicable requirements specified in paragraphs (a) through (f) of this section after the dates specified in paragraphs (a) through (f) of this section.

(h) The requirements of this section do not apply to owners or operators of stationary CI ICE that have been modified, reconstructed, and do not apply to engines that were removed from one existing location and reinstalled at a new location.

§ 60.4209 What are the monitoring requirements if I am an owner or operator of a stationary CI internal combustion engine?

If you are an owner or operator, you must meet the monitoring requirements of this section. In addition, you must also meet the monitoring requirements specified in §60.4211.

(a) If you are an owner or operator of an emergency stationary CI internal combustion engine, you must install a non-resettable hour meter prior to startup of the engine.

A non-resettable hour meter will be installed on the 250 kW emergency generator

(b) If you are an owner or operator of a stationary CI internal combustion engine equipped with a diesel particulate filter to comply with the emission standards in §60.4204, the diesel particulate filter must be installed with a backpressure monitor that notifies the owner or operator when the high backpressure limit of the engine is approached.

Compliance Requirements

§ 60.4210 What are my compliance requirements if I am a stationary CI internal combustion engine manufacturer?

(a) Stationary CI internal combustion engine manufacturers must certify their stationary CI ICE with a displacement of less than 10 liters per cylinder to the emission standards specified in §60.4201(a) through (c) and §60.4202(a), (b) and (d) using the certification procedures required in 40 CFR part 89, subpart B, or 40 CFR part 1039, subpart C, as applicable, and must test their engines as specified in those parts. For the purposes of this subpart, engines certified to the standards in table 1 to this subpart shall be subject to the same requirements as engines certified to the standards in 40 CFR part 89. For the purposes of this subpart, engines certified to the standards in table 4 to this subpart shall be subject to the same requirements as engines certified to the standards in 40 CFR part 89, except that engines with NFPA nameplate power of less than 37 KW (50 HP) certified to model year 2011 or later standards shall be subject to the same requirements as engines certified to the standards in 40 CFR part 1039.

(b) Stationary CI internal combustion engine manufacturers must certify their stationary CI ICE with a displacement of greater than or equal to 10 liters per cylinder and less than 30 liters per cylinder to the emission standards specified in §60.4201(d) and §60.4202(c) using the certification procedures required in 40 CFR part 94 subpart C, and must test their engines as specified in 40 CFR part 94.

(c) Stationary CI internal combustion engine manufacturers must meet the requirements of 40 CFR 1039.120, 40 CFR 1039.125, 40 CFR 1039.130, 40 CFR 1039.135, and 40 CFR part 1068 for engines that are certified to the emission standards in 40 CFR part 1039. Stationary CI internal combustion engine manufacturers must meet the corresponding provisions of 40 CFR part 89 or 40 CFR part 94 for engines that would be covered by that part if they were nonroad (including marine) engines. Labels on such engines must refer to stationary engines, rather than or in addition to nonroad or marine engines, as appropriate. Stationary CI internal combustion engine manufacturers must label their engines according to paragraphs (c)(1) through (3) of this section.

(1) Stationary CI internal combustion engines manufactured from January 1, 2006 to March 31, 2006 (January 1, 2006 to June 30, 2006 for fire pump engines), other than those that are part of certified engine families under the nonroad CI engine regulations, must be labeled according to 40 CFR 1039.20.

(2) Stationary CI internal combustion engines manufactured from April 1, 2006 to December 31, 2006 (or, for fire pump engines, July 1, 2006 to December 31 of the year preceding the year listed in table 3 to this subpart) must be labeled according to paragraphs (c)(2)(i) through (iii) of this section:

(i) Stationary CI internal combustion engines that are part of certified engine families under the nonroad regulations must meet the labeling requirements for nonroad CI engines, but do not have to meet the labeling requirements in 40 CFR 1039.20.

(ii) Stationary CI internal combustion engines that meet Tier 1 requirements (or requirements for fire pumps) under this subpart, but do not meet the requirements applicable to nonroad CI engines must be labeled according to 40 CFR 1039.20. The engine manufacturer may add language to the label clarifying that the engine meets Tier 1 requirements (or requirements for fire pumps) of this subpart.

(iii) Stationary CI internal combustion engines manufactured after April 1, 2006 that do not meet Tier 1 requirements of this subpart, or fire pumps engines manufactured after July 1, 2006 that do not meet the requirements for fire pumps under this subpart, may not be used in the U.S. If any such engines are manufactured in the U.S. after April 1, 2006 (July 1, 2006 for fire pump engines), they must be exported or must be brought into compliance with the appropriate standards prior to initial operation. The export provisions of 40 CFR 1068.230 would apply to engines for export and the manufacturers must label such engines according to 40 CFR 1068.230.

(3) Stationary CI internal combustion engines manufactured after January 1, 2007 (for fire pump engines, after January 1 of the year listed in table 3 to this subpart, as applicable) must be labeled according to paragraphs (c)(3)(i) through (iii) of this section.

(i) Stationary CI internal combustion engines that meet the requirements of this subpart and the corresponding requirements for nonroad (including marine) engines of the same model year and HP must be labeled according to the provisions in part 89, 94 or 1039, as appropriate.

(ii) Stationary CI internal combustion engines that meet the requirements of this subpart, but are not certified to the standards applicable to nonroad (including marine) engines of the same model year and HP must be labeled according to the provisions in part 89, 94 or 1039, as appropriate, but the words “stationary” must be included instead of “nonroad” or “marine” on the label. In addition, such engines must be labeled according to 40 CFR 1039.20.

(iii) Stationary CI internal combustion engines that do not meet the requirements of this subpart must be labeled according to 40 CFR 1068.230 and must be exported under the provisions of 40 CFR 1068.230.

(d) An engine manufacturer certifying an engine family or families to standards under this subpart that are identical to standards applicable under parts 89, 94, or 1039 for that model year may certify any such family that contains both nonroad (including marine) and stationary engines as a single engine family and/or may include any such family containing stationary engines in the averaging, banking and trading provisions applicable for such engines under those parts.

(e) Manufacturers of engine families discussed in paragraph (d) of this section may meet the labeling requirements referred to in paragraph (c) of this section for stationary CI ICE by either adding a separate label containing the information required in paragraph (c) of this section or by adding the words “and stationary” after the word “nonroad” or “marine,” as appropriate, to the label.

(f) Starting with the model years shown in table 5 to this subpart, stationary CI internal combustion engine manufacturers must add a permanent label stating that the engine is for stationary emergency use only to each new emergency stationary CI internal combustion engine greater than or equal to 19 KW (25 HP) that meets all the emission standards for emergency engines in §60.4202 but does not meet all the emission standards for non-emergency engines in §60.4201. The label must be added according to the labeling requirements specified in 40 CFR 1039.135(b). Engine manufacturers must specify in the owner's manual that operation of emergency engines is limited to emergency operations and required maintenance and testing.

(g) Manufacturers of fire pump engines may use the test cycle in table 6 to this subpart for testing fire pump engines and may test at the NFPA certified nameplate HP, provided that the engine is labeled as “Fire Pump Applications Only”.

(h) Engine manufacturers, including importers, may introduce into commerce uncertified engines or engines certified to earlier standards that were manufactured before the new or changed standards took effect until inventories are depleted, as long as such engines are part of normal inventory. For example, if the engine manufacturers' normal industry practice is to keep on hand a one-month supply of engines based on its projected sales, and a new tier of standards starts to apply for the 2009 model year, the engine manufacturer may manufacture engines based on the normal inventory requirements late in the 2008 model year, and sell those engines for installation. The engine manufacturer may not circumvent the provisions of §§60.4201 or 60.4202 by stockpiling engines that are built before new or changed standards take effect. Stockpiling of such engines beyond normal industry practice is a violation of this subpart.

(i) The replacement engine provisions of 40 CFR 89.1003(b)(7), 40 CFR 94.1103(b)(3), 40 CFR 94.1103(b)(4) and 40 CFR 1068.240 are applicable to stationary CI engines replacing existing equipment that is less than 15 years old.

§ 60.4211 What are my compliance requirements if I am an owner or operator of a stationary CI internal combustion engine?

(a) If you are an owner or operator and must comply with the emission standards specified in this subpart, you must operate and maintain the stationary CI internal combustion engine and control device according to the manufacturer's written instructions or procedures developed by the owner or operator that are approved by the engine manufacturer. In addition, owners and operators may only change those settings that are permitted by the manufacturer. You must also meet the requirements of 40 CFR parts 89, 94 and/or 1068, as they apply to you.

(b) If you are an owner or operator of a pre-2007 model year stationary CI internal combustion engine and must comply with the emission standards specified in §§60.4204(a) or 60.4205(a), or if you are an owner or operator of a CI fire pump engine that is manufactured prior to the model years in table 3 to this subpart and must comply with the emission standards specified in §60.4205(c), you must demonstrate compliance according to one of the methods specified in paragraphs (b)(1) through (5) of this section.

(1) Purchasing an engine certified according to 40 CFR part 89 or 40 CFR part 94, as applicable, for the same model year and maximum engine power. The engine must be installed and configured according to the manufacturer's specifications.

(2) Keeping records of performance test results for each pollutant for a test conducted on a similar engine. The test must have been conducted using the same methods specified in this subpart and these methods must have been followed correctly.

(3) Keeping records of engine manufacturer data indicating compliance with the standards.

(4) Keeping records of control device vendor data indicating compliance with the standards.

(5) Conducting an initial performance test to demonstrate compliance with the emission standards according to the requirements specified in §60.4212, as applicable.

(c) If you are an owner or operator of a 2007 model year and later stationary CI internal combustion engine and must comply with the emission standards specified in §60.4204(b) or §60.4205(b), or if you are an owner or operator of a CI fire pump engine that is manufactured during or after the model year that applies to your fire pump engine power rating in table 3 to this subpart and must comply with the emission standards specified in §60.4205(c), you must comply by purchasing an engine certified to the emission standards in §60.4204(b), or §60.4205(b) or (c), as applicable, for the same model year and maximum (or in the case of fire pumps, NFPA nameplate) engine power. The engine must be installed and configured according to the manufacturer's specifications.

(d) If you are an owner or operator and must comply with the emission standards specified in §60.4204(c) or §60.4205(d), you must demonstrate compliance according to the requirements specified in paragraphs (d)(1) through (3) of this section.

(1) Conducting an initial performance test to demonstrate initial compliance with the emission standards as specified in §60.4213.

(2) Establishing operating parameters to be monitored continuously to ensure the stationary internal combustion engine continues to meet the emission standards. The owner or operator must petition the Administrator for approval of operating parameters to be monitored continuously. The petition must include the information described in paragraphs (d)(2)(i) through (v) of this section.

(i) Identification of the specific parameters you propose to monitor continuously;

(ii) A discussion of the relationship between these parameters and NO_X and PM emissions, identifying how the emissions of these pollutants change with changes in these parameters, and how limitations on these parameters will serve to limit NO_X and PM emissions;

(iii) A discussion of how you will establish the upper and/or lower values for these parameters which will establish the limits on these parameters in the operating limitations;

(iv) A discussion identifying the methods and the instruments you will use to monitor these parameters, as well as the relative accuracy and precision of these methods and instruments; and

(v) A discussion identifying the frequency and methods for recalibrating the instruments you will use for monitoring these parameters.

(3) For non-emergency engines with a displacement of greater than or equal to 30 liters per cylinder, conducting annual performance tests to demonstrate continuous compliance with the emission standards as specified in §60.4213.

(e) Emergency stationary ICE may be operated for the purpose of maintenance checks and readiness testing, provided that the tests are recommended by Federal, State, or local government, the manufacturer, the vendor, or the insurance company associated with the engine. Maintenance checks and readiness testing of such units is limited to 100 hours per year. There is no time limit on the use of emergency stationary ICE in emergency situations. Anyone may petition the Administrator for approval of additional hours to be used for maintenance checks and readiness testing, but a petition is not required if the owner or operator maintains records indicating that Federal, State, or local standards require maintenance and testing of emergency ICE beyond 100 hours per year. For owners and operators of emergency engines meeting standards under §60.4205 but not §60.4204, any operation other than emergency operation, and maintenance and testing as permitted in this section, is prohibited.

Maintenance and testing hours of operation for the 250 kW emergency generator will not exceed 100 hr/yr.

Testing Requirements for Owners and Operators

§ 60.4212 What test methods and other procedures must I use if I am an owner or operator of a stationary CI internal combustion engine with a displacement of less than 30 liters per cylinder?

Owners and operators of stationary CI ICE with a displacement of less than 30 liters per cylinder who conduct performance tests pursuant to this subpart must do so according to paragraphs (a) through (d) of this section.

(a) The performance test must be conducted according to the in-use testing procedures in 40 CFR part 1039, subpart F.

(b) Exhaust emissions from stationary CI ICE that are complying with the emission standards for new CI engines in 40 CFR part 1039 must not exceed the not-to-exceed (NTE) standards for the same model year and maximum engine power as required in 40 CFR 1039.101(e) and 40 CFR 1039.102(g)(1), except as specified in 40 CFR 1039.104(d). This requirement starts when NTE requirements take effect for nonroad diesel engines under 40 CFR part 1039.

(c) Exhaust emissions from stationary CI ICE that are complying with the emission standards for new CI engines in 40 CFR 89.112 or 40 CFR 94.8, as applicable, must not exceed the NTE numerical requirements, rounded to the same number of decimal places as the applicable standard in 40 CFR 89.112 or 40 CFR 94.8, as applicable, determined from the following equation:

$$\text{NTE requirement for each pollutant} = (1.25) \times (\text{STD}) \qquad \text{(Eq. 1)}$$

Where:

STD = The standard specified for that pollutant in 40 CFR 89.112 or 40 CFR 94.8, as applicable.

Alternatively, stationary CI ICE that are complying with the emission standards for new CI engines in 40 CFR 89.112 or 40 CFR 94.8 may follow the testing procedures specified in §60.4213 of this subpart, as appropriate.

(d) Exhaust emissions from stationary CI ICE that are complying with the emission standards for pre-2007 model year engines in §60.4204(a), §60.4205(a), or §60.4205(c) must not exceed the NTE numerical requirements, rounded to the same number of decimal places as the applicable standard in §60.4204(a), §60.4205(a), or §60.4205(c), determined from the equation in paragraph (c) of this section.

Where:

STD = The standard specified for that pollutant in §60.4204(a), §60.4205(a), or §60.4205(c).

Alternatively, stationary CI ICE that are complying with the emission standards for pre-2007 model year engines in §60.4204(a), §60.4205(a), or §60.4205(c) may follow the testing procedures specified in §60.4213, as appropriate.

Notification, Reports, and Records for Owners and Operators

§ 60.4214 What are my notification, reporting, and recordkeeping requirements if I am an owner or operator of a stationary CI internal combustion engine?

(a) Owners and operators of non-emergency stationary CI ICE that are greater than 2,237 KW (3,000 HP), or have a displacement of greater than or equal to 10 liters per cylinder, or are pre-2007 model year engines that are greater than 130 KW (175 HP) and not certified, must meet the requirements of paragraphs (a)(1) and (2) of this section.

(1) Submit an initial notification as required in §60.7(a)(1). The notification must include the information in paragraphs (a)(1)(i) through (v) of this section.

(i) Name and address of the owner or operator;

(ii) The address of the affected source;

(iii) Engine information including make, model, engine family, serial number, model year, maximum engine power, and engine displacement;

(iv) Emission control equipment; and

(v) Fuel used.

(2) Keep records of the information in paragraphs (a)(2)(i) through (iv) of this section.

(i) All notifications submitted to comply with this subpart and all documentation supporting any notification.

(ii) Maintenance conducted on the engine.

(iii) If the stationary CI internal combustion is a certified engine, documentation from the manufacturer that the engine is certified to meet the emission standards.

(iv) If the stationary CI internal combustion is not a certified engine, documentation that the engine meets the emission standards.

(b) If the stationary CI internal combustion engine is an emergency stationary internal combustion engine, the owner or operator is not required to submit an initial notification. Starting with the model years in table 5 to this subpart, if the emergency engine does not meet the standards applicable to non-emergency engines in the applicable model year, the owner or operator must keep records of the operation of the engine in emergency and non-emergency service that are recorded through the non-resettable hour meter. The owner must record the time of operation of the engine and the reason the engine was in operation during that time.

(c) If the stationary CI internal combustion engine is equipped with a diesel particulate filter, the owner or operator must keep records of any corrective action taken after the backpressure monitor has notified the owner or operator that the high backpressure limit of the engine is approached.

Appendix K

Applicable Requirements 40 CFR 63 Supbart ZZZZ

COPYRIGHT 2015 BY CH2M HILL, INC. • COMPANY CONFIDENTIAL

Title 40: Protection of Environment
Part 63, Subpart ZZZZ—National Emissions Standards for Hazardous Air Pollutants for Stationary Reciprocating Internal Combustion Engines

§ 63.6580 What is the purpose of subpart ZZZZ?

Subpart ZZZZ establishes national emission limitations and operating limitations for hazardous air pollutants (HAP) emitted from stationary reciprocating internal combustion engines (RICE) located at major and area sources of HAP emissions. This subpart also establishes requirements to demonstrate initial and continuous compliance with the emission limitations and operating limitations.

§ 63.6585 Am I subject to this subpart?

You are subject to this subpart if you own or operate a stationary RICE at a major or area source of HAP emissions, except if the stationary RICE is being tested at a stationary RICE test cell/stand.

(a) A stationary RICE is any internal combustion engine which uses reciprocating motion to convert heat energy into mechanical work and which is not mobile. Stationary RICE differ from mobile RICE in that a stationary RICE is not a non-road engine as defined at 40 CFR 1068.30, and is not used to propel a motor vehicle or a vehicle used solely for competition.

(b) A major source of HAP emissions is a plant site that emits or has the potential to emit any single HAP at a rate of 10 tons (9.07 megagrams) or more per year or any combination of HAP at a rate of 25 tons (22.68 megagrams) or more per year, except that for oil and gas production facilities, a major source of HAP emissions is determined for each surface site.

(c) An area source of HAP emissions is a source that is not a major source.

The facility maintains and operates one emergency internal combustion engine installed prior to June 12, 2006. The stationary RICE is rated at 80 kW (125 hp), manufactured by Generac. This facility is classified as an area source of HAP emissions defined as potential-to-emit (PTE) 10 tons per year (tpy) or less for any single HAP or PTE less than 25 tpy for total HAPs.

(d) If you are an owner or operator of an area source subject to this subpart, your status as an entity subject to a standard or other requirements under this subpart does not subject you to the obligation to obtain a permit under 40 CFR part 70 or 71, provided you are not required to obtain a permit under 40 CFR 70.3(a) or 40 CFR 71.3(a) for a reason other than your status as an area source under this subpart. Notwithstanding the previous sentence, you must continue to comply with the provisions of this subpart as applicable.

(e) If you are an owner or operator of a stationary RICE used for national security purposes, you may be eligible to request an exemption from the requirements of this subpart as described in 40 CFR part 1068, subpart C.

(f) The emergency stationary RICE listed in paragraphs (f)(1) through (3) of this section are not subject to this subpart. The stationary RICE must meet the definition of an emergency stationary RICE in § 63.6675, which includes operating according to the provisions specified in § 63.6640(f).

(1) Existing residential emergency stationary RICE located at an area source of HAP emissions that do not operate or are not contractually obligated to be available for more than 15 hours per calendar year for the purposes specified in § 63.6640(f)(2)(ii) and (iii) and that do not operate for the purpose specified in § 63.6640(f)(4)(ii).

***Residential emergency stationary RICE* means an emergency stationary RICE used in residential establishments such as homes or apartment buildings. Nunhems is not residential.**

(2) Existing commercial emergency stationary RICE located at an area source of HAP emissions that do not operate or are not contractually obligated to be available for more than 15 hours per calendar year for the purposes specified in § 63.6640(f)(2)(ii) and (iii) and that do not operate for the purpose specified in § 63.6640(f)(4)(ii).

Commercial emergency stationary RICE **means an emergency stationary RICE used in commercial establishments such as office buildings, hotels, stores, telecommunications facilities, restaurants, financial institutions such as banks, doctor's offices, and sports and performing arts facilities. Nunhems is not commericial.**

(3) Existing institutional emergency stationary RICE located at an area source of HAP emissions that do not operate or are not contractually obligated to be available for more than 15 hours per calendar year for the purposes specified in § 63.6640(f)(2)(ii) and (iii) and that do not operate for the purpose specified in § 63.6640(f)(4)(ii).

Institutional emergency stationary RICE **means an emergency stationary RICE used in institutional establishments such as medical centers, nursing homes, research centers, institutions of higher education, correctional facilities, elementary and secondary schools, libraries, religious establishments, police stations, and fire stations. Nunhems is not institutional.**

§ 63.6590 What parts of my plant does this subpart cover?

This subpart applies to each affected source.

(a) Affected source. An affected source is any existing, new, or reconstructed stationary RICE located at a major or area source of HAP emissions, excluding stationary RICE being tested at a stationary RICE test cell/stand.

(1) *Existing stationary RICE.*

(i) For stationary RICE with a site rating of more than 500 brake horsepower (HP) located at a major source of HAP emissions, a stationary RICE is existing if you commenced construction or reconstruction of the stationary RICE before December 19, 2002.

(ii) For stationary RICE with a site rating of less than or equal to 500 brake HP located at a major source of HAP emissions, a stationary RICE is existing if you commenced construction or reconstruction of the stationary RICE before June 12, 2006.

(iii) For stationary RICE located at an area source of HAP emissions, a stationary RICE is existing if you commenced construction or reconstruction of the stationary RICE before June 12, 2006.

Installed in 2001.

§ 63.6595 When do I have to comply with this subpart?

(a) *Affected sources.* (1) If you have an existing stationary RICE, excluding existing non-emergency CI stationary RICE, with a site rating of more than 500 brake HP located at a major source of HAP emissions, you must comply with the applicable emission limitations and operating limitations no later than June 15, 2007. If you have an existing non-emergency CI stationary RICE with a site rating of more than 500 brake HP located at a major source of HAP emissions, an existing stationary CI RICE with a site rating of less than or equal to 500 brake HP located at a major source of HAP emissions, or an existing stationary CI RICE located at an area source of HAP emissions, you must comply with the applicable emission limitations and operating limitations no later than May 3, 2013. If you have an existing stationary SI RICE with a site rating of less than or equal to 500 brake HP located at a major source of HAP emissions, or an existing stationary SI RICE located at an area source of HAP emissions, you must comply with the applicable emission limitations and operating limitations no later than October 19, 2013.

It is an existing emergency RICE with a site rating of 125 hp at an area source of HAP emissions.

§ 63.6603 What emission limitations and operating limitations must I meet if I own or operate an existing stationary RICE located at an area source of HAP emissions?

Compliance with the numerical emission limitations established in this subpart is based on the results of testing the average of three 1-hour runs using the testing requirements and procedures in §63.6620 and Table 4 to this subpart.

Note that a close look at Table 4 item 3 implies that if you have to comply with a CO or formaldehyde limit you must sample using the listed methods. Since the emergency stationary CI RICE does not have to comply with CO or Formaldehyde limits, there is no requirement to sample these pollutants.

(a) If you own or operate an existing stationary RICE located at an area source of HAP emissions, you must comply with the requirements in Table 2d to this subpart and the operating limitations in Table 1b and Table 2b (**no operating limitations apply)** to this subpart that apply to you.

Table 2d applies to emergency stationary CI RICE. It doesn't establish numerical emission limits but does establish O&M requirements such as oil and filter changes.

Emergency Stationary CI RICE (Table 2d –Existing Stationary RICE located at Area Sources of HAP Emissions) :

- **Change oil and filter every 500 hours of operation or annually, whichever comes first**
- **Inspect air cleaner every 1,000 hours or annually, whichever comes first**
- **Inspect all hoses and belts every 500 hours of operation or annually, whichever comes first**

§ 63.6604 What fuel requirements must I meet if I own or operate a stationary CI RICE?

(a) If you own or operate an existing non-emergency, non-black start CI stationary RICE with a site rating of more than 300 brake HP with a displacement of less than 30 liters per cylinder that uses diesel fuel, you must use diesel fuel that meets the requirements in 40 CFR 80.510(b) for nonroad diesel fuel.

(b) Beginning January 1, 2015, if you own or operate an existing emergency CI stationary RICE with a site rating of more than 100 brake HP and a displacement of less than 30 liters per cylinder that uses diesel fuel and operates or is contractually obligated to be available for more than 15 hours per calendar year for the purposes specified in § 63.6640(f)(2)(ii) and (iii) or that operates for the purpose specified in § 63.6640(f)(4)(ii), you must use diesel fuel that meets the requirements in 40 CFR 80.510(b) for nonroad diesel fuel, except that any existing diesel fuel purchased (or otherwise obtained) prior to January 1, 2015, may be used until depleted.

(c) Beginning January 1, 2015, if you own or operate a new emergency CI stationary RICE with a site rating of more than 500 brake HP and a displacement of less than 30 liters per cylinder located at a major source of HAP that uses diesel fuel and operates or is contractually obligated to be available for more than 15 hours per calendar year for the purposes specified in § 63.6640(f)(2)(ii) and (iii), you must use diesel fuel that meets the requirements in 40 CFR 80.510(b) for nonroad diesel fuel, except that any existing diesel fuel purchased (or otherwise obtained) prior to January 1, 2015, may be used until depleted.

§ 63.6605 What are my general requirements for complying with this subpart?

(a) You must be in compliance with the emission limitations and operating limitations in this subpart that apply to you at all times.

(b) At all times you must operate and maintain any affected source, including associated air pollution control equipment and monitoring equipment, in a manner consistent with safety and good air pollution control practices for minimizing emissions. The general duty to minimize emissions does not require you to make any further efforts to

reduce emissions if levels required by this standard have been achieved. Determination of whether such operation and maintenance procedures are being used will be based on information available to the Administrator which may include, but is not limited to, monitoring results, review of operation and maintenance procedures, review of operation and maintenance records, and inspection of the source.

§ 63.6612 By what date must I conduct the initial performance tests or other initial compliance demonstrations if I own or operate an existing stationary RICE with a site rating of less than or equal to 500 brake HP located at a major source of HAP emissions or an existing stationary RICE located at an area source of HAP emissions?

If you own or operate an existing stationary RICE with a site rating of less than or equal to 500 brake HP located at a major source of HAP emissions or an existing stationary RICE located at an area source of HAP emissions you are subject to the requirements of this section.

(a) You must conduct any initial performance test or other initial compliance demonstration according to Tables 4 and 5 to this subpart that apply to you within 180 days after the compliance date that is specified for your stationary RICE in § 63.6595 and according to the provisions in § 63.7(a)(2).

There is no need to perform an initial performance test because there are no established numerical emission limits for CO or formaldehyde.

(b) An owner or operator is not required to conduct an initial performance test on a unit for which a performance test has been previously conducted, but the test must meet all of the conditions described in paragraphs (b)(1) through (4) of this section.

(1) The test must have been conducted using the same methods specified in this subpart, and these methods must have been followed correctly.

(2) The test must not be older than 2 years.

(3) The test must be reviewed and accepted by the Administrator.

(4) Either no process or equipment changes must have been made since the test was performed, or the owner or operator must be able to demonstrate that the results of the performance test, with or without adjustments, reliably demonstrate compliance despite process or equipment changes.

§ 63.6625 What are my monitoring, installation, collection, operation, and maintenance requirements?

(e) If you own or operate any of the following stationary RICE, you must operate and maintain the stationary RICE and after-treatment control device (if any) according to the manufacturer's emission-related written instructions or develop your own maintenance plan which must provide to the extent practicable for the maintenance and operation of the engine in a manner consistent with good air pollution control practice for minimizing emissions:

(1) An existing stationary RICE with a site rating of less than 100 HP located at a major source of HAP emissions;

(2) An existing emergency or black start stationary RICE with a site rating of less than or equal to 500 HP located at a major source of HAP emissions;

(3) An existing emergency or black start stationary RICE located at an area source of HAP emissions;

One emergency RICE located at the facility with engine rating of 125 hp.

(4) An existing non-emergency, non-black start stationary CI RICE with a site rating less than or equal to 300 HP located at an area source of HAP emissions;

(5) An existing non-emergency, non-black start 2SLB stationary RICE located at an area source of HAP emissions;

(6) An existing non-emergency, non-black start landfill or digester gas stationary RICE located at an area source of HAP emissions;

(7) An existing non-emergency, non-black start 4SLB stationary RICE with a site rating less than or equal to 500 HP located at an area source of HAP emissions;

(8) An existing non-emergency, non-black start 4SRB stationary RICE with a site rating less than or equal to 500 HP located at an area source of HAP emissions;

(9) An existing, non-emergency, non-black start 4SLB stationary RICE with a site rating greater than 500 HP located at an area source of HAP emissions that is operated 24 hours or less per calendar year; and

(10) An existing, non-emergency, non-black start 4SRB stationary RICE with a site rating greater than 500 HP located at an area source of HAP emissions that is operated 24 hours or less per calendar year.

(f) If you own or operate an existing emergency stationary RICE with a site rating of less than or equal to 500 brake HP located at a major source of HAP emissions or an existing emergency stationary RICE located at an area source of HAP emissions, you must install a non-resettable hour meter if one is not already installed.

(g) If you own or operate an existing non-emergency, non-black start CI engine greater than or equal to 300 HP that is not equipped with a closed crankcase ventilation system, you must comply with either paragraph (g)(1) or paragraph (g)(2) of this section. Owners and operators must follow the manufacturer's specified maintenance requirements for operating and maintaining the open or closed crankcase ventilation systems and replacing the crankcase filters, or can request the Administrator to approve different maintenance requirements that are as protective as manufacturer requirements. Existing CI engines located at area sources in areas of Alaska not accessible by the FAHS do not have to meet the requirements of paragraph (g) of this section.

(1) Install a closed crankcase ventilation system that prevents crankcase emissions from being emitted to the atmosphere, or

(2) Install an open crankcase filtration emission control system that reduces emissions from the crankcase by filtering the exhaust stream to remove oil mist, particulates, and metals.

(h) If you operate a new, reconstructed, or existing stationary engine, you must minimize the engine's time spent at idle during startup and minimize the engine's startup time to a period needed for appropriate and safe loading of the engine, not to exceed 30 minutes, after which time the emission standards applicable to all times other than startup in Tables 1a, 2a, 2c, and 2d to this subpart apply.

(i) If you own or operate a stationary CI engine that is subject to the work, operation or management practices in items 1 or 2 of Table 2c to this subpart or in items 1 or 4 of Table 2d to this subpart, you have the option of utilizing an oil analysis program in order to extend the specified oil change requirement in Tables 2c and 2d to this subpart. The oil analysis must be performed at the same frequency specified for changing the oil in Table 2c or 2d to this subpart. The analysis program must at a minimum analyze the following three parameters: Total Base Number, viscosity, and percent water content. The condemning limits for these parameters are as follows: Total Base Number is less than 30 percent of the Total Base Number of the oil when new; viscosity of the oil has changed by more than 20 percent from the viscosity of the oil when new; or percent water content (by volume) is greater than 0.5. If all of these condemning limits are not exceeded, the engine owner or operator is not required to change the oil. If any of the limits are exceeded, the engine owner or operator must change the oil within 2 days of receiving the results of the analysis; if the engine is not in operation when the results of the analysis are received, the engine owner or operator must change the oil within 2 days or before commencing operation, whichever is later. The owner or operator must keep records of the parameters that are analyzed as part of the program, the results of the analysis, and the oil changes for the engine. The analysis program must be part of the maintenance plan for the engine.

(j) If you own or operate a stationary SI engine that is subject to the work, operation or management practices in items 6, 7, or 8 of Table 2c to this subpart or in items 5, 6, 7, 9, or 11 of Table 2d to this subpart, you have the option of utilizing an oil analysis program in order to extend the specified oil change requirement in Tables 2c and 2d to this subpart. The oil analysis must be performed at the same frequency specified for changing the oil in Table 2c or 2d to this subpart. The analysis program must at a minimum analyze the following three parameters: Total Acid Number, viscosity, and percent water content. The condemning limits for these parameters are as follows: Total Acid Number increases by more than 3.0 milligrams of potassium hydroxide (KOH) per gram from Total Acid Number of the oil when new; viscosity of the oil has changed by more than 20 percent from the viscosity of the oil when new; or percent water content (by volume) is greater than 0.5. If all of these condemning limits are not exceeded, the engine owner or operator is not required to change the oil. If any of the limits are exceeded, the engine owner or operator must change the oil within 2 days of receiving the results of the analysis; if the engine is not in operation when the results of the analysis are received, the engine owner or operator must change the oil within 2 days or before commencing operation, whichever is later. The owner or operator must keep records of the parameters that are analyzed as part of the program, the results of the analysis, and the oil changes for the engine. The analysis program must be part of the maintenance plan for the engine.

§ 63.6640 How do I demonstrate continuous compliance with the emission limitations and operating limitations?

(a) You must demonstrate continuous compliance with each emission limitation and operating limitation in Tables 1a and 1b, Tables 2a and 2b, Table 2c, and Table 2d to this subpart that apply to you according to methods specified in Table 6 to this subpart.

(b) You must report each instance in which you did not meet each emission limitation or operating limitation in Tables 1a and 1b, Tables 2a and 2b, Table 2c, and Table 2d to this subpart that apply to you. These instances are deviations from the emission and operating limitations in this subpart. These deviations must be reported according to the requirements in §63.6650. If you change your catalyst, you must reestablish the values of the operating parameters measured during the initial performance test. When you reestablish the values of your operating parameters, you must also conduct a performance test to demonstrate that you are meeting the required emission limitation applicable to your stationary RICE.

(c) [Reserved]

(d) For new, reconstructed, and rebuilt stationary RICE, deviations from the emission or operating limitations that occur during the first 200 hours of operation from engine startup (engine burn-in period) are not violations. Rebuilt stationary RICE means a stationary RICE that has been rebuilt as that term is defined in 40 CFR 94.11(a).

(e) You must also report each instance in which you did not meet the requirements in Table 8 to this subpart that apply to you. If you own or operate a new or reconstructed stationary RICE with a site rating of less than or equal to 500 brake HP located at a major source of HAP emissions (except new or reconstructed 4SLB engines greater than or equal to 250 and less than or equal to 500 brake HP), a new or reconstructed stationary RICE located at an area source of HAP emissions, or any of the following RICE with a site rating of more than 500 brake HP located at a major source of HAP emissions, you do not need to comply with the requirements in Table 8 to this subpart: An existing 2SLB stationary RICE, an existing 4SLB stationary RICE, an existing emergency stationary RICE, an existing limited use stationary RICE, or an existing stationary RICE which fires landfill gas or digester gas equivalent to 10 percent or more of the gross heat input on an annual basis. If you own or operate any of the following RICE with a site rating of more than 500 brake HP located at a major source of HAP emissions, you do not need to comply with the requirements in Table 8 to this subpart, except for the initial notification requirements: a new or reconstructed stationary RICE that combusts landfill gas or digester gas equivalent to 10 percent or more of the gross heat input on an annual basis, a new or reconstructed emergency stationary RICE, or a new or reconstructed limited use stationary RICE.

(f) *Requirements for emergency stationary RICE.* (1) If you own or operate an existing emergency stationary RICE with a site rating of less than or equal to 500 brake HP located at a major source of HAP emissions, a new or reconstructed emergency stationary RICE with a site rating of more than 500 brake HP located at a major source of HAP emissions that was installed on or after June 12, 2006, or an existing emergency stationary RICE located at an area source of HAP emissions, you must operate the emergency stationary RICE according to the requirements in paragraphs (f)(1)(i) through (iii) of this section. Any operation other than emergency operation, maintenance and testing, and operation in non-emergency situations for 50 hours per year, as described in paragraphs (f)(1)(i) through

(iii) of this section, is prohibited. If you do not operate the engine according to the requirements in paragraphs (f)(1)(i) through (iii) of this section, the engine will not be considered an emergency engine under this subpart and will need to meet all requirements for non-emergency engines.

(i) There is no time limit on the use of emergency stationary RICE in emergency situations.

(ii) You may operate your emergency stationary RICE for the purpose of maintenance checks and readiness testing, provided that the tests are recommended by Federal, State or local government, the manufacturer, the vendor, or the insurance company associated with the engine. Maintenance checks and readiness testing of such units is limited to 100 hours per year. The owner or operator may petition the Administrator for approval of additional hours to be used for maintenance checks and readiness testing, but a petition is not required if the owner or operator maintains records indicating that Federal, State, or local standards require maintenance and testing of emergency RICE beyond 100 hours per year.

(iii) You may operate your emergency stationary RICE up to 50 hours per year in non-emergency situations, but those 50 hours are counted towards the 100 hours per year provided for maintenance and testing. The 50 hours per year for non-emergency situations cannot be used for peak shaving or to generate income for a facility to supply power to an electric grid or otherwise supply power as part of a financial arrangement with another entity; except that owners and operators may operate the emergency engine for a maximum of 15 hours per year as part of a demand response program if the regional transmission organization or equivalent balancing authority and transmission operator has determined there are emergency conditions that could lead to a potential electrical blackout, such as unusually low frequency, equipment overload, capacity or energy deficiency, or unacceptable voltage level. The engine may not be operated for more than 30 minutes prior to the time when the emergency condition is expected to occur, and the engine operation must be terminated immediately after the facility is notified that the emergency condition is no longer imminent. The 15 hours per year of demand response operation are counted as part of the 50 hours of operation per year provided for non-emergency situations. The supply of emergency power to another entity or entities pursuant to financial arrangement is not limited by this paragraph (f)(1)(iii), as long as the power provided by the financial arrangement is limited to emergency power.

(2) If you own or operate an emergency stationary RICE with a site rating of more than 500 brake HP located at a major source of HAP emissions that was installed prior to June 12, 2006, you must operate the engine according to the conditions described in paragraphs (f)(2)(i) through (iii) of this section. If you do not operate the engine according to the requirements in paragraphs (f)(2)(i) through (iii) of this section, the engine will not be considered an emergency engine under this subpart and will need to meet all requirements for non-emergency engines.

(i) There is no time limit on the use of emergency stationary RICE in emergency situations.

(ii) You may operate your emergency stationary RICE for the purpose of maintenance checks and readiness testing, provided that the tests are recommended by the manufacturer, the vendor, or the insurance company associated with the engine. Required testing of such units should be minimized, but there is no time limit on the use of emergency stationary RICE in emergency situations and for routine testing and maintenance.

(iii) You may operate your emergency stationary RICE for an additional 50 hours per year in non-emergency situations. The 50 hours per year for non-emergency situations cannot be used for peak shaving or to generate income for a facility to supply power to an electric grid or otherwise supply power as part of a financial arrangement with another entity.

(3) Emergency stationary RICE located at major sources of HAP may be operated for up to 50 hours per calendar year in non-emergency situations. The 50 hours of operation in non-emergency situations are counted as part of the 100 hours per calendar year for maintenance and testing and emergency demand response provided in paragraph (f)(2) of this section. The 50 hours per year for non-emergency situations cannot be used for peak shaving or non-emergency demand response, or to generate income for a facility to supply power to an electric grid or otherwise supply power as part of a financial arrangement with another entity.

(4) Emergency stationary RICE located at area sources of HAP may be operated for up to 50 hours per calendar year in non-emergency situations. The 50 hours of operation in non-emergency situations are counted as part of the 100 hours per calendar year for maintenance and testing and emergency demand response provided in paragraph (f)(2) of this section. Except as provided in paragraphs (f)(4)(i) and (ii) of this section, the 50 hours per year for non-

emergency situations cannot be used for peak shaving or non-emergency demand response, or to generate income for a facility to an electric grid or otherwise supply power as part of a financial arrangement with another entity.

§ 63.6655 What records must I keep?

(a) If you must comply with the emission and operating limitations, you must keep the records described in paragraphs (a)(1) through (a)(5), (b)(1) through (b)(3) and (c) of this section.

(1) A copy of each notification and report that you submitted to comply with this subpart, including all documentation supporting any Initial Notification or Notification of Compliance Status that you submitted, according to the requirement in §63.10(b)(2)(xiv).

(2) Records of the occurrence and duration of each malfunction of operation (*i.e.,* process equipment) or the air pollution control and monitoring equipment.

(3) Records of performance tests and performance evaluations as required in §63.10(b)(2)(viii).

(4) Records of all required maintenance performed on the air pollution control and monitoring equipment.

(5) Records of actions taken during periods of malfunction to minimize emissions in accordance with §63.6605(b), including corrective actions to restore malfunctioning process and air pollution control and monitoring equipment to its normal or usual manner of operation.

(b) For each CEMS or CPMS, you must keep the records listed in paragraphs (b)(1) through (3) of this section.

(1) Records described in §63.10(b)(2)(vi) through (xi).

(2) Previous (*i.e.,* superseded) versions of the performance evaluation plan as required in §63.8(d)(3).

(3) Requests for alternatives to the relative accuracy test for CEMS or CPMS as required in §63.8(f)(6)(i), if applicable.

(c) If you are operating a new or reconstructed stationary RICE which fires landfill gas or digester gas equivalent to 10 percent or more of the gross heat input on an annual basis, you must keep the records of your daily fuel usage monitors.

(d) You must keep the records required in Table 6 of this subpart to show continuous compliance with each emission or operating limitation that applies to you.

(e) You must keep records of the maintenance conducted on the stationary RICE in order to demonstrate that you operated and maintained the stationary RICE and after-treatment control device (if any) according to your own maintenance plan if you own or operate any of the following stationary RICE;

(1) An existing stationary RICE with a site rating of less than 100 brake HP located at a major source of HAP emissions.

(2) An existing stationary emergency RICE.

(3) An existing stationary RICE located at an area source of HAP emissions subject to management practices as shown in Table 2d to this subpart.

(f) If you own or operate any of the stationary RICE in paragraphs (f)(1) or (2) of this section, you must keep records of the hours of operation of the engine that is recorded through the non-resettable hour meter. The owner or operator must document how many hours are spent for emergency operation, including what classified the operation as emergency and how many hours are spent for non-emergency operation. If the engines are used for demand

response operation, the owner or operator must keep records of the notification of the emergency situation, and the time the engine was operated as part of demand response.

(1) An existing emergency stationary RICE with a site rating of less than or equal to 500 brake HP located at a major source of HAP emissions that does not meet the standards applicable to non-emergency engines.

(2) An existing emergency stationary RICE located at an area source of HAP emissions that does not meet the standards applicable to non-emergency engines.

§ 63.6660 In what form and how long must I keep my records?

(a) Your records must be in a form suitable and readily available for expeditious review according to §63.10(b)(1).

(b) As specified in §63.10(b)(1), you must keep each record for 5 years following the date of each occurrence, measurement, maintenance, corrective action, report, or record.

(c) You must keep each record readily accessible in hard copy or electronic form for at least 5 years after the date of each occurrence, measurement, maintenance, corrective action, report, or record, according to §63.10(b)(1).

Appendix L

Process Weight Calculation

COPYRIGHT 2015 BY CH2M HILL, INC. • COMPANY CONFIDENTIAL

Appendix L
Nunhems
Process Weight Calculations

Compliance with IDAPA Rule 701 PM Standard for Process Weight

Unit	DC1	DC2	DC3	DC4	DC5	DC6	DC7	DC8	FARR 1	FARR 2	FARR 3	FARR 4	FARR 5	FARR 6	Murphy Rodgers Baghouse	Herding Filtration System 01	Herding Filtration System 02
Process Weight (lb/hr)	503	503	503	503	503	503	503	113	113	113	113	113	503	503	113	113	113
PM Emission Rate (lb/hr)	0.21	0.21	0.21	0.08	0.12	0.20	0.04	0.15	0.10	0.09	0.11	0.13	0.18	0.18	0.011	0.020	0.24
Compliance with Allowable Emission Calculation																	
Calculated Allowable Emissions (E) (lb/hr) [1]	5.21	5.21	5.21	5.21	5.21	5.21	5.21	3.59	3.59	3.59	3.59	3.59	5.21	5.21	0.77	0.77	3.59
Compliance w/ PM Loading Standard	**Yes**	**Yes**	**Yes**	**Yes**	**Yes**	**Yes**	**Yes**	**Yes**	**Yes**	**Yes**	**Yes**	**Yes**	**Yes**	**Yes**	**Yes**	**Yes**	**Yes**

[1] **General Restrictions - New Equipment:**
If PW is less than 9,250 pounds per hour
$E = 0.045(PW)^{0.6}$
If PW is greater than 9,250 pounds per hour
$E = 1.10(PW)^{0.25}$