TORF
ENVIRONMENTAL
MANAGEMENT

3459 E. Boulder Heights Dr. Boise, Idaho 83712 208.345.7222 www.torf.us

October 11, 2016

RECEIVED
OCT 11 2016
By DEQ

HAND-DELIVERY
Michael Simon
Idaho Department of Environmental Quality
Air Quality Division
1410 N. Hilton
Boise, ID 83706

Re: Permit to Construct Application
Western Trailer Co., 6701 Business Way, Boise, Idaho 83716

Dear Mr. Simon:

Enclosed is an Application for Air Quality Permit to Construct and application fee check in the amount of $1,000 for the Western Trailer Business Way facility. A pre-application meeting concerning this facility was held with Idaho DEQ representatives in 2015.

Please do not hesitate to contact me with any questions you may have. I may be reached at (208) 345-7222 or via email at mtorf@torf.us.

Very truly yours,
TORF Environmental Management

Mark Torf

Mark A. Torf
President

RECEIVED
OCT 11 2016
DEPARTMENT OF ENVIRONMENTAL QUALITY
STATE A.Q. PROGRAM

Enc. Western Trailers, Check No. 115180

cc: Tom Hogan, Western Trailer

DEQ AIR QUALITY PROGRAM
1410 N. Hilton, Boise, ID 83706
For assistance, call the
Air Permit Hotline – 1-877-5PERMIT

Cover Sheet for Air Permit Application – Permit to Construct **Form CSPTC**

Please see instructions on page 2 before filling out the form.

COMPANY NAME, FACILITY NAME, AND FACILITY ID NUMBER

1. Company Name	Western Trailer Co		
2. Facility Name	Business Way	3. Facility ID No.	
4. Brief Project Description - One sentence or less	Permit Existing Truck Trailer Manufacturing Operation.		

PERMIT APPLICATION TYPE

5. ☐ New Source ☐ New Source at Existing Facility ☐ PTC for a Tier I Source Processed Pursuant to IDAPA 58.01.01.209.05.c
☒ Unpermitted Existing Source ☐ Facility Emissions Cap ☐ Modify Existing Source: Permit No.:_____ Date Issued:_____
☐ Required by Enforcement Action: Case No.:_____

6. ☐ Minor PTC ☐ Major PTC

FORMS INCLUDED

Included	N/A	Forms		DEQ Verify
☒	☐	Form CSPTC – Cover Sheet		☐
☒	☐	Form GI – Facility Information		☐
☒	☐	Form EU0 – Emissions Units General		☐
☐	☐	Form EU1– Industrial Engine Information	Please specify number of EU1s attached: _____	☐
☐	☐	Form EU2– Nonmetallic Mineral Processing Plants	Please specify number of EU2s attached: _____	☐
☒	☐	Form EU3– Spray Paint Booth Information	Please specify number of EU3s attached: 1	☐
☐	☐	Form EU4– Cooling Tower Information	Please specify number of EU3s attached: _____	☐
☐	☐	Form EU5 – Boiler Information	Please specify number of EU4s attached: _____	☐
☐	☐	Form CBP– Concrete Batch Plant	Please specify number of CBPs attached: _____	☐
☐	☐	Form HMAP – Hot Mix Asphalt Plant	Please specify number of HMAPs attached: _____	☐
☐	☐	PERF – Portable Equipment Relocation Form		☐
☐	☐	Form AO – Afterburner/Oxidizer		☐
☐	☐	Form CA – Carbon Adsorber		☐
☐	☐	Form CYS – Cyclone Separator		☐
☐	☐	Form ESP – Electrostatic Precipitator		☐
☐	☐	Form BCE– Baghouses Control Equipment		☐
☐	☐	Form SCE– Scrubbers Control Equipment		☐
☐	☐	Form VSCE – Venturi Scrubber Control Equipment		☐
☐	☐	Form CAM – Compliance Assurance Monitoring		☐
☒	☐	Forms EI-– Emissions Inventory	(See Narrative, Tabless3-1–3-18,,4-1–4-2,, and 5-1–5-6	☐
☒	☐	PP – Plot Plan	(See Narrative,Page 6-2	☐
☒	☐	Forms MI1 – MI4 – Modeling	(See Tables 2 and 4, Modeling Protocoll Report,Appendix D)	☐
☒	☐	Form FRA – Federal Regulation Applicability		☐

DEQ AIR QUALITY PROGRAM
1410 N. Hilton, Boise, ID 83706
For assistance, call the
Air Permit Hotline: 1-877-5PERMIT

General Information **Form GI**
Revision 7
6/29/12

Please see instructions on back page before filling out the form. All information is required. If information is missing, the application will not be processed.

Identification

1. Facility name Western Trailer Co

2. Existing facility identification number

☐ **Check if new facility (not yet operating)**

3. Brief project description Permitting Existing Truck Trailer Manufacturing Operation.

Facility Information

4. Primary facility permitting contact name Tom Hogan **Contact type** Facility permitting contact

Telephone number (208) 602-0362 **E-mail** thogan@westerntrailer.com

5. Alternate facility permitting contact name Mark Torf **Alternate contact type** Facility permitting contact

Telephone number 208-345-7222 **E-mail** mtorf@torf.us

6. Mailing address where permit will be sent (street/city/county/state/zip code) P. O. 5598, Boise, ID 83705-0598

7. Physical address of permitted facility (if different than mailing address) (street/ city/county/state/zip code) 6701 Business Way, Boise, ID 83716

8. Is the equipment portable? ☐ **Yes*** ☒ **No** ***If yes, complete and attach PERF; see instructions.**

9. NAICS codes: Primary NAICS 336212 **Secondary NAICS**

10. Brief business description and principal product produced Truck Trailer Manufacturing

11. Identify any adjacent or contiguous facility this company owns and/or operates

12. Specify type of application ☒ **Permit to construct (PTC); application fee of $1,000 required. See instructions.**

☐ **Tier I permit** ☐ **Tier II permit** ☐ **Tier II/Permit to construct**

For Tier I permitted facilities only: If you are applying for a PTC then you must also specify how the PTC will be incorporated into the Tier I permit.

☐ **Co-process Tier I modification and PTC** ☐ **Incorporate PTC at the time of Tier I renewal** ☐ **Administratively amend the Tier I permit to incorporate the PTC upon applicant's request (IDAPA 58.01.01.209.05.a, b, or c)**

Certification

In accordance with IDAPA 58.01.01.123 (Rules for the Control of Air Pollution in Idaho), I certify based on information and belief formed after reasonable inquiry, the statements and information in the document(s) are true, accurate, and complete.

13. Responsible official's name Jerry Whitehead **Official's title** President

Official's address P. O. 5598, Boise, ID 83705-0598

Telephone number 208-344-2539 **E-mail** jwhitehead@westerntrailer.com

Official's signature **Date** 3/oct/16

☒ **14. Check here to indicate that you want to review the draft permit before final issuance.**

DEQ AIR QUALITY PROGRAM
1410 N. Hilton, Boise, ID 83706
For assistance, call the
Air Permit Hotline – 1-877-5PERMIT

Emissions Unit - General **Form EU0**
Revision 4
08/28/08

Please see instructions on page 2 before filling out the form.

IDENTIFICATION

1. Company Name:	2. Facility Name:	3. Facility ID No:
Western Trailer Co	Business Way	

4. Brief Project Description:	Permit Existing Truck Trailer Manufacturing Operation.

EMISSIONS UNIT (PROCESS) IDENTIFICATION & DESCRIPTION

5.	Emissions Unit (EU) Name:	PAINT SHOP DRYING ROOM HEATER
6.	EU ID Number:	MAU1
7.	EU Type:	☐ New Source ☒ Unpermitted Existing Source ☐ Modification to a Permitted Source -- Previous Permit #: Date Issued:
8.	Manufacturer:	REZNOR
9.	Model:	RDF2-120
10..	Maximum Capacity:	1,500,000 BTU/HOUR
11.	Date of Construction:	2002
12.	Date of Modification (if any):	
13.	Is this a Controlled Emission Unit?	☒ No ☐ Yes If Yes, complete the following section. If No, go to line 22.

EMISSIONS CONTROL EQUIPMENT

14. Control Equipment Name and ID:		
15. Date of Installation:	16. Date of Modification (if any):	
17. Manufacturer and Model Number:		
18. ID(s) of Emission Unit Controlled:		
19. Is operating schedule different than emission units(s) involved?	☐ Yes ☐ No	
20. Does the manufacturer guarantee the control efficiency of the control equipment?	☐ Yes ☐ No (If Yes, attach and label manufacturer guarantee)	

	Pollutant Controlled					
	PM	PM10	SO_2	NOx	VOC	CO
Control Efficiency						

21. If manufacturer's data is not available, attach a separate sheet of paper to provide the control equipment design specifications and performance data to support the above mentioned control efficiency.

EMISSION UNIT OPERATING SCHEDULE (hours/day, hours/year, or other)

22.	Actual Operation:	4,380 HRS/YEAR
23.	Maximum Operation:	8,760 HRS/YEAR

REQUESTED LIMITS

24.	Are you requesting any permit limits?	☐ Yes ☒ No (If Yes, indicate all that apply below)
	☐ Operation Hour Limit(s):	
	☐ Production Limit(s):	
	☐ Material Usage Limit(s):	
	☐ Limits Based on Stack Testing:	Please attach all relevant stack testing summary reports
	☐ Other:	
25.	Rationale for Requesting the Limit(s):	

DEQ AIR QUALITY PROGRAM
1410 N. Hilton, Boise, ID 83706
For assistance, call the
Air Permit Hotline – 1-877-5PERMIT

Emissions Unit - General **Form EU0**
Revision 4
08/28/08

Please see instructions on page 2 before filling out the form.

IDENTIFICATION

1. Company Name:	2. Facility Name:	3. Facility ID No:
Western Trailer Co	Business Way	

4. Brief Project Description:	Permit Existing Truck Trailer Manufacturing Operation.

EMISSIONS UNIT (PROCESS) IDENTIFICATION & DESCRIPTION

5.	Emissions Unit (EU) Name:	PAINT SHOP WASH BAY HEATER
6.	EU ID Number:	MAU2
7.	EU Type:	☐ New Source ☒ Unpermitted Existing Source ☐ Modification to a Permitted Source -- Previous Permit #: Date Issued:
8.	Manufacturer:	REZNOR
9.	Model:	RDF2-120
10..	Maximum Capacity:	1,500,000 BTU/HOUR
11.	Date of Construction:	2002
12.	Date of Modification (if any):	
13.	Is this a Controlled Emission Unit?	☒ No ☐ Yes If Yes, complete the following section. If No, go to line 22.

EMISSIONS CONTROL EQUIPMENT

14. Control Equipment Name and ID:		
15. Date of Installation:	16. Date of Modification (if any):	
17. Manufacturer and Model Number:		
18. ID(s) of Emission Unit Controlled:		
19. Is operating schedule different than emission units(s) involved?	☐ Yes ☐ No	
20. Does the manufacturer guarantee the control efficiency of the control equipment?	☐ Yes ☐ No (If Yes, attach and label manufacturer guarantee)	

	Pollutant Controlled					
	PM	PM10	SO_2	NOx	VOC	CO
Control Efficiency						

21. If manufacturer's data is not available, attach a separate sheet of paper to provide the control equipment design specifications and performance data to support the above mentioned control efficiency.

EMISSION UNIT OPERATING SCHEDULE (hours/day, hours/year, or other)

22.	Actual Operation:	4,380 HRS/YEAR
23.	Maximum Operation:	8,760 HRS/YEAR

REQUESTED LIMITS

24.	Are you requesting any permit limits?	☐ Yes ☒ No (If Yes, indicate all that apply below)
	☐ Operation Hour Limit(s):	
	☐ Production Limit(s):	
	☐ Material Usage Limit(s):	
	☐ Limits Based on Stack Testing:	Please attach all relevant stack testing summary reports
	☐ Other:	
25.	Rationale for Requesting the Limit(s):	

DEQ AIR QUALITY PROGRAM
1410 N. Hilton, Boise, ID 83706
For assistance, call the
Air Permit Hotline – 1-877-5PERMIT

Emissions Unit - General **Form EU0**
Revision 4
08/28/08

Please see instructions on page 2 before filling out the form.

IDENTIFICATION

1. Company Name:	2. Facility Name:	3. Facility ID No:
Western Trailer Co	Business Way	

4. Brief Project Description:	Permit Existing Truck Trailer Manufacturing Operation.

EMISSIONS UNIT (PROCESS) IDENTIFICATION & DESCRIPTION

5.	Emissions Unit (EU) Name:	PAINT SHOP SPRAY BOOTH HEATERS
6.	EU ID Number:	MAU3
7.	EU Type:	☐ New Source ☒ Unpermitted Existing Source ☐ Modification to a Permitted Source -- Previous Permit #: Date Issued:
8.	Manufacturer:	VIKING
9.	Model:	ANS Z83.4
10..	Maximum Capacity:	2 UNITS 2,800,000 BTU/HOUR = 5,600,000 BTU/HOUR
11.	Date of Construction:	1998
12.	Date of Modification (if any):	
13.	Is this a Controlled Emission Unit?	☒ No ☐ Yes If Yes, complete the following section. If No, go to line 22.

EMISSIONS CONTROL EQUIPMENT

14. Control Equipment Name and ID:	
15. Date of Installation:	16. Date of Modification (if any):
17. Manufacturer and Model Number:	
18. ID(s) of Emission Unit Controlled:	
19. Is operating schedule different than emission units(s) involved?	☐ Yes ☐ No
20. Does the manufacturer guarantee the control efficiency of the control equipment?	☐ Yes ☐ No (If Yes, attach and label manufacturer guarantee)

	Pollutant Controlled					
	PM	PM10	SO_2	NOx	VOC	CO
Control Efficiency						

21. If manufacturer's data is not available, attach a separate sheet of paper to provide the control equipment design specifications and performance data to support the above mentioned control efficiency.

EMISSION UNIT OPERATING SCHEDULE (hours/day, hours/year, or other)

22.	Actual Operation:	4,380 HRS/YEAR
23.	Maximum Operation:	8,760 HRS/YEAR

REQUESTED LIMITS

24.	Are you requesting any permit limits?	☐ Yes ☒ No (If Yes, indicate all that apply below)
	☐ Operation Hour Limit(s):	
	☐ Production Limit(s):	
	☐ Material Usage Limit(s):	
	☐ Limits Based on Stack Testing:	Please attach all relevant stack testing summary reports
	☐ Other:	
25.	Rationale for Requesting the Limit(s):	

DEQ AIR QUALITY PROGRAM
1410 N. Hilton, Boise, ID 83706
For assistance, call the
Air Permit Hotline – 1-877-5PERMIT

Emissions Unit - General **Form EU0**
Revision 4
08/28/08

Please see instructions on page 2 before filling out the form.

IDENTIFICATION

1. Company Name:	2. Facility Name:	3. Facility ID No:
Western Trailer Co	Business Way	

4. Brief Project Description:	Permit Existing Truck Trailer Manufacturing Operation.

EMISSIONS UNIT (PROCESS) IDENTIFICATION & DESCRIPTION

5.	Emissions Unit (EU) Name:	BUILDING 1 SPACE HEATER
6.	EU ID Number:	H1
7.	EU Type:	☐ New Source ☒ Unpermitted Existing Source ☐ Modification to a Permitted Source -- Previous Permit #: Date Issued:
8.	Manufacturer:	REZNOR
9.	Model:	FT-30
10..	Maximum Capacity:	30,000 BTU/HOUR
11.	Date of Construction:	1998
12.	Date of Modification (if any):	
13.	Is this a Controlled Emission Unit?	☒ No ☐ Yes If Yes, complete the following section. If No, go to line 22.

EMISSIONS CONTROL EQUIPMENT

14. Control Equipment Name and ID:			
15. Date of Installation:		16. Date of Modification (if any):	
17. Manufacturer and Model Number:			
18. ID(s) of Emission Unit Controlled:			
19. Is operating schedule different than emission units(s) involved?	☐ Yes ☐ No		
20. Does the manufacturer guarantee the control efficiency of the control equipment?	☐ Yes ☐ No (If Yes, attach and label manufacturer guarantee)		

	Pollutant Controlled					
	PM	PM10	SO_2	NOx	VOC	CO
Control Efficiency						

21. If manufacturer's data is not available, attach a separate sheet of paper to provide the control equipment design specifications and performance data to support the above mentioned control efficiency.

EMISSION UNIT OPERATING SCHEDULE (hours/day, hours/year, or other)

22.	Actual Operation:	4,380 HRS/YEAR
23.	Maximum Operation:	8,760 HRS/YEAR

REQUESTED LIMITS

24.	Are you requesting any permit limits?	☐ Yes ☒ No (If Yes, indicate all that apply below)
	☐ Operation Hour Limit(s):	
	☐ Production Limit(s):	
	☐ Material Usage Limit(s):	
	☐ Limits Based on Stack Testing:	Please attach all relevant stack testing summary reports
	☐ Other:	
25.	Rationale for Requesting the Limit(s):	

DEQ AIR QUALITY PROGRAM
1410 N. Hilton, Boise, ID 83706
For assistance, call the
Air Permit Hotline – 1-877-5PERMIT

Emissions Unit - General **Form EU0**
Revision 4
08/28/08

Please see instructions on page 2 before filling out the form.

IDENTIFICATION

1. Company Name:	2. Facility Name:	3. Facility ID No:
Western Trailer Co	Business Way	

4. Brief Project Description:	Permit Existing Truck Trailer Manufacturing Operation.

EMISSIONS UNIT (PROCESS) IDENTIFICATION & DESCRIPTION

5.	Emissions Unit (EU) Name:	BUILDING 1 UNIT HEATERS (50)
6.	EU ID Number:	H2
7.	EU Type:	☐ New Source ☒ Unpermitted Existing Source ☐ Modification to a Permitted Source -- Previous Permit #: Date Issued:
8.	Manufacturer:	RE-VERBER-RAY
9.	Model:	DR100
10..	Maximum Capacity:	100,000 BTU/HOUR
11.	Date of Construction:	1998
12.	Date of Modification (if any):	
13.	Is this a Controlled Emission Unit?	☒ No ☐ Yes If Yes, complete the following section. If No, go to line 22.

EMISSIONS CONTROL EQUIPMENT

14. Control Equipment Name and ID:		
15. Date of Installation:	16. Date of Modification (if any):	
17. Manufacturer and Model Number:		
18. ID(s) of Emission Unit Controlled:		
19. Is operating schedule different than emission units(s) involved?	☐ Yes ☐ No	
20. Does the manufacturer guarantee the control efficiency of the control equipment?	☐ Yes ☐ No (If Yes, attach and label manufacturer guarantee)	

	Pollutant Controlled					
	PM	PM10	SO_2	NOx	VOC	CO
Control Efficiency						

21. If manufacturer's data is not available, attach a separate sheet of paper to provide the control equipment design specifications and performance data to support the above mentioned control efficiency.

EMISSION UNIT OPERATING SCHEDULE (hours/day, hours/year, or other)

22.	Actual Operation:	4,380 HRS/YEAR
23.	Maximum Operation:	8,760 HRS/YEAR

REQUESTED LIMITS

24.	Are you requesting any permit limits?	☐ Yes ☒ No (If Yes, indicate all that apply below)
	☐ Operation Hour Limit(s):	
	☐ Production Limit(s):	
	☐ Material Usage Limit(s):	
	☐ Limits Based on Stack Testing:	Please attach all relevant stack testing summary reports
	☐ Other:	
25.	Rationale for Requesting the Limit(s):	

DEQ AIR QUALITY PROGRAM
1410 N. Hilton, Boise, ID 83706
For assistance, call the
Air Permit Hotline – 1-877-5PERMIT

Emissions Unit - General **Form EU0**
Revision 4
08/28/08

Please see instructions on page 2 before filling out the form.

IDENTIFICATION

1. Company Name:	2. Facility Name:	3. Facility ID No:
Western Trailer Co	Business Way	

4. Brief Project Description:	Permit Existing Truck Trailer Manufacturing Operation.

EMISSIONS UNIT (PROCESS) IDENTIFICATION & DESCRIPTION

5.	Emissions Unit (EU) Name:	BUILDING 1 TOOL ROOM FURNACE
6.	EU ID Number:	H3
7.	EU Type:	☐ New Source ☒ Unpermitted Existing Source ☐ Modification to a Permitted Source -- Previous Permit #: Date Issued:
8.	Manufacturer:	BRYANT
9.	Model:	
10..	Maximum Capacity:	46,000 BTU/HOUR
11.	Date of Construction:	1998
12.	Date of Modification (if any):	
13.	Is this a Controlled Emission Unit?	☒ No ☐ Yes If Yes, complete the following section. If No, go to line 22.

EMISSIONS CONTROL EQUIPMENT

14. Control Equipment Name and ID:		
15. Date of Installation:	16. Date of Modification (if any):	
17. Manufacturer and Model Number:		
18. ID(s) of Emission Unit Controlled:		
19. Is operating schedule different than emission units(s) involved?	☐ Yes ☐ No	
20. Does the manufacturer guarantee the control efficiency of the control equipment?	☐ Yes ☐ No (If Yes, attach and label manufacturer guarantee)	

	Pollutant Controlled					
	PM	PM10	SO_2	NOx	VOC	CO
Control Efficiency						

21. If manufacturer's data is not available, attach a separate sheet of paper to provide the control equipment design specifications and performance data to support the above mentioned control efficiency.

EMISSION UNIT OPERATING SCHEDULE (hours/day, hours/year, or other)

22.	Actual Operation:	4,380 HRS/YEAR
23.	Maximum Operation:	8,760 HRS/YEAR

REQUESTED LIMITS

24.	Are you requesting any permit limits?	☐ Yes ☒ No (If Yes, indicate all that apply below)
	☐ Operation Hour Limit(s):	
	☐ Production Limit(s):	
	☐ Material Usage Limit(s):	
	☐ Limits Based on Stack Testing:	Please attach all relevant stack testing summary reports
	☐ Other:	
25.	Rationale for Requesting the Limit(s):	

DEQ AIR QUALITY PROGRAM
1410 N. Hilton, Boise, ID 83706
For assistance, call the
Air Permit Hotline – 1-877-5PERMIT

Emissions Unit - General **Form EU0**
Revision 4
08/28/08

Please see instructions on page 2 before filling out the form.

IDENTIFICATION

1. Company Name:	2. Facility Name:	3. Facility ID No:
Western Trailer Co	Business Way	

4. Brief Project Description:	Permit Existing Truck Trailer Manufacturing Operation.

EMISSIONS UNIT (PROCESS) IDENTIFICATION & DESCRIPTION

5.	Emissions Unit (EU) Name:	BUILDING 1 OFFICE FURNACES (5)
6.	EU ID Number:	H4
7.	EU Type:	☐ New Source ☒ Unpermitted Existing Source ☐ Modification to a Permitted Source -- Previous Permit #: Date Issued:
8.	Manufacturer:	BRYANT
9.	Model:	
10..	Maximum Capacity:	115,000 BTU/HOUR
11.	Date of Construction:	1998
12.	Date of Modification (if any):	
13.	Is this a Controlled Emission Unit?	☒ No ☐ Yes If Yes, complete the following section. If No, go to line 22.

EMISSIONS CONTROL EQUIPMENT

14. Control Equipment Name and ID:		
15. Date of Installation:	16. Date of Modification (if any):	
17. Manufacturer and Model Number:		
18. ID(s) of Emission Unit Controlled:		
19. Is operating schedule different than emission units(s) involved?	☐ Yes ☐ No	
20. Does the manufacturer guarantee the control efficiency of the control equipment?	☐ Yes ☐ No (If Yes, attach and label manufacturer guarantee)	

	Pollutant Controlled					
	PM	PM10	SO_2	NOx	VOC	CO
Control Efficiency						

21. If manufacturer's data is not available, attach a separate sheet of paper to provide the control equipment design specifications and performance data to support the above mentioned control efficiency.

EMISSION UNIT OPERATING SCHEDULE (hours/day, hours/year, or other)

22.	Actual Operation:	4,380 HRS/YEAR
23.	Maximum Operation:	8,760 HRS/YEAR

REQUESTED LIMITS

24.	Are you requesting any permit limits?	☐ Yes ☒ No (If Yes, indicate all that apply below)
	☐ Operation Hour Limit(s):	
	☐ Production Limit(s):	
	☐ Material Usage Limit(s):	
	☐ Limits Based on Stack Testing:	Please attach all relevant stack testing summary reports
	☐ Other:	
25.	Rationale for Requesting the Limit(s):	

DEQ AIR QUALITY PROGRAM
1410 N. Hilton, Boise, ID 83706
For assistance, call the
Air Permit Hotline – 1-877-5PERMIT

Emissions Unit - General **Form EU0**
Revision 4
08/28/08

Please see instructions on page 2 before filling out the form.

IDENTIFICATION

1. Company Name:	2. Facility Name:	3. Facility ID No:
Western Trailer Co	Business Way	

4. Brief Project Description:	Permit Existing Truck Trailer Manufacturing Operation.

EMISSIONS UNIT (PROCESS) IDENTIFICATION & DESCRIPTION

5.	Emissions Unit (EU) Name:	BUILDING 8 UNIT HEATERS (2)
6.	EU ID Number:	H5
7.	EU Type:	☐ New Source ☒ Unpermitted Existing Source ☐ Modification to a Permitted Source -- Previous Permit #: Date Issued:
8.	Manufacturer:	REZNOR
9.	Model:	FE250-H DIRECT-FIRED
10..	Maximum Capacity:	210,00 BTU/HOUR
11.	Date of Construction:	MARCH 2001
12.	Date of Modification (if any):	
13.	Is this a Controlled Emission Unit?	☒ No ☐ Yes If Yes, complete the following section. If No, go to line 22.

EMISSIONS CONTROL EQUIPMENT

14. Control Equipment Name and ID:		
15. Date of Installation:	16. Date of Modification (if any):	
17. Manufacturer and Model Number:		
18. ID(s) of Emission Unit Controlled:		
19. Is operating schedule different than emission units(s) involved?	☐ Yes ☐ No	
20. Does the manufacturer guarantee the control efficiency of the control equipment?	☐ Yes ☐ No (If Yes, attach and label manufacturer guarantee)	

	Pollutant Controlled					
	PM	PM10	SO_2	NOx	VOC	CO
Control Efficiency						

21. If manufacturer's data is not available, attach a separate sheet of paper to provide the control equipment design specifications and performance data to support the above mentioned control efficiency.

EMISSION UNIT OPERATING SCHEDULE (hours/day, hours/year, or other)

22.	Actual Operation:	4,380 HRS/YEAR
23.	Maximum Operation:	8,760 HRS/YEAR

REQUESTED LIMITS

24.	Are you requesting any permit limits?	☐ Yes ☒ No (If Yes, indicate all that apply below)
	☐ Operation Hour Limit(s):	
	☐ Production Limit(s):	
	☐ Material Usage Limit(s):	
	☐ Limits Based on Stack Testing:	Please attach all relevant stack testing summary reports
	☐ Other:	
25.	Rationale for Requesting the Limit(s):	

DEQ AIR QUALITY PROGRAM
1410 N. Hilton, Boise, ID 83706
For assistance, call the
Air Permit Hotline – 1-877-5PERMIT

Emissions Unit - General **Form EU0**
Revision 4
08/28/08

Please see instructions on page 2 before filling out the form.

IDENTIFICATION

1. Company Name:	2. Facility Name:	3. Facility ID No:
Western Trailer Co	Business Way	

4. Brief Project Description:	Permit Existing Truck Trailer Manufacturing Operation.

EMISSIONS UNIT (PROCESS) IDENTIFICATION & DESCRIPTION

5.	Emissions Unit (EU) Name:	BUILDING 8 TRAINING ROOM FURNACE
6.	EU ID Number:	H6
7.	EU Type:	☐ New Source ☒ Unpermitted Existing Source ☐ Modification to a Permitted Source -- Previous Permit #: Date Issued:
8.	Manufacturer:	TRANE
9.	Model:	
10..	Maximum Capacity:	100,000 BTU/HOUR
11.	Date of Construction:	
12.	Date of Modification (if any):	
13.	Is this a Controlled Emission Unit?	☒ No ☐ Yes If Yes, complete the following section. If No, go to line 22.

EMISSIONS CONTROL EQUIPMENT

14. Control Equipment Name and ID:		
15. Date of Installation:	16. Date of Modification (if any):	
17. Manufacturer and Model Number:		
18. ID(s) of Emission Unit Controlled:		
19. Is operating schedule different than emission units(s) involved?	☐ Yes ☐ No	
20. Does the manufacturer guarantee the control efficiency of the control equipment?	☐ Yes ☐ No (If Yes, attach and label manufacturer guarantee)	

	Pollutant Controlled					
	PM	PM10	SO_2	NOx	VOC	CO
Control Efficiency						

21. If manufacturer's data is not available, attach a separate sheet of paper to provide the control equipment design specifications and performance data to support the above mentioned control efficiency.

EMISSION UNIT OPERATING SCHEDULE (hours/day, hours/year, or other)

22.	Actual Operation:	4,380 HRS/YEAR
23.	Maximum Operation:	8,760 HRS/YEAR

REQUESTED LIMITS

24.	Are you requesting any permit limits?	☐ Yes ☒ No (If Yes, indicate all that apply below)
	☐ Operation Hour Limit(s):	
	☐ Production Limit(s):	
	☐ Material Usage Limit(s):	
	☐ Limits Based on Stack Testing:	Please attach all relevant stack testing summary reports
	☐ Other:	
25.	Rationale for Requesting the Limit(s):	

DEQ AIR QUALITY PROGRAM
1410 N. Hilton, Boise, ID 83706
For assistance, call the
Air Permit Hotline – 1-877-5PERMIT

Emissions Unit - General **Form EU0**
Revision 4
08/28/08

Please see instructions on page 2 before filling out the form.

IDENTIFICATION

1. Company Name:	2. Facility Name:	3. Facility ID No:
Western Trailer Co	Business Way	

4. Brief Project Description:	Permit Existing Truck Trailer Manufacturing Operation.

EMISSIONS UNIT (PROCESS) IDENTIFICATION & DESCRIPTION

5.	Emissions Unit (EU) Name:	BUILDING 10 WELDING AREA UNIT HEATERS (8)
6.	EU ID Number:	H7
7.	EU Type:	☐ New Source ☒ Unpermitted Existing Source ☐ Modification to a Permitted Source -- Previous Permit #: Date Issued:
8.	Manufacturer:	RE-VERBER-RAY
9.	Model:	DR100
10..	Maximum Capacity:	100,000 BTU/HOUR
11.	Date of Construction:	1998
12.	Date of Modification (if any):	
13.	Is this a Controlled Emission Unit?	☒ No ☐ Yes If Yes, complete the following section. If No, go to line 22.

EMISSIONS CONTROL EQUIPMENT

14. Control Equipment Name and ID:		
15. Date of Installation:	16. Date of Modification (if any):	
17. Manufacturer and Model Number:		
18. ID(s) of Emission Unit Controlled:		
19. Is operating schedule different than emission units(s) involved?	☐ Yes ☐ No	
20. Does the manufacturer guarantee the control efficiency of the control equipment?	☐ Yes ☐ No (If Yes, attach and label manufacturer guarantee)	

	Pollutant Controlled					
	PM	PM10	SO_2	NOx	VOC	CO
Control Efficiency						

21. If manufacturer's data is not available, attach a separate sheet of paper to provide the control equipment design specifications and performance data to support the above mentioned control efficiency.

EMISSION UNIT OPERATING SCHEDULE (hours/day, hours/year, or other)

22.	Actual Operation:	4,380 HRS/YEAR
23.	Maximum Operation:	8,760 HRS/YEAR

REQUESTED LIMITS

24.	Are you requesting any permit limits?	☐ Yes ☒ No (If Yes, indicate all that apply below)
	☐ Operation Hour Limit(s):	
	☐ Production Limit(s):	
	☐ Material Usage Limit(s):	
	☐ Limits Based on Stack Testing:	Please attach all relevant stack testing summary reports
	☐ Other:	
25.	Rationale for Requesting the Limit(s):	

DEQ AIR QUALITY PROGRAM
1410 N. Hilton, Boise, ID 83706
For assistance, call the
Air Permit Hotline – 1-877-5PERMIT

Emissions Unit - General **Form EU0**
Revision 4
08/28/08

Please see instructions on page 2 before filling out the form.

IDENTIFICATION

1. Company Name:	2. Facility Name:	3. Facility ID No:
Western Trailer Co	Business Way	

4. Brief Project Description:	Permit Existing Truck Trailer Manufacturing Operation.

EMISSIONS UNIT (PROCESS) IDENTIFICATION & DESCRIPTION

5.	Emissions Unit (EU) Name:	BUILDING 10 MACHINE SHOP AREA UNIT HEATERS (3)
6.	EU ID Number:	H8
7.	EU Type:	☐ New Source ☒ Unpermitted Existing Source ☐ Modification to a Permitted Source -- Previous Permit #: Date Issued:
8.	Manufacturer:	MODINE
9.	Model:	PDP125AED130
10..	Maximum Capacity:	125,000 BTU/HOUR
11.	Date of Construction:	
12.	Date of Modification (if any):	
13.	Is this a Controlled Emission Unit?	☒ No ☐ Yes If Yes, complete the following section. If No, go to line 22.

EMISSIONS CONTROL EQUIPMENT

14. Control Equipment Name and ID:		
15. Date of Installation:	16. Date of Modification (if any):	
17. Manufacturer and Model Number:		
18. ID(s) of Emission Unit Controlled:		
19. Is operating schedule different than emission units(s) involved?	☐ Yes ☐ No	
20. Does the manufacturer guarantee the control efficiency of the control equipment?	☐ Yes ☐ No (If Yes, attach and label manufacturer guarantee)	

	Pollutant Controlled					
	PM	PM10	SO_2	NOx	VOC	CO
Control Efficiency						

21. If manufacturer's data is not available, attach a separate sheet of paper to provide the control equipment design specifications and performance data to support the above mentioned control efficiency.

EMISSION UNIT OPERATING SCHEDULE (hours/day, hours/year, or other)

22.	Actual Operation:	4,380 HRS/YEAR
23.	Maximum Operation:	8,760 HRS/YEAR

REQUESTED LIMITS

24.	Are you requesting any permit limits?	☐ Yes ☒ No (If Yes, indicate all that apply below)
	☐ Operation Hour Limit(s):	
	☐ Production Limit(s):	
	☐ Material Usage Limit(s):	
	☐ Limits Based on Stack Testing:	Please attach all relevant stack testing summary reports
	☐ Other:	
25.	Rationale for Requesting the Limit(s):	

DEQ AIR QUALITY PROGRAM
1410 N. Hilton, Boise, ID 83706
For assistance, call the
Air Permit Hotline – 1-877-5PERMIT

Emissions Unit - General **Form EU0**
Revision 4
08/28/08

Please see instructions on page 2 before filling out the form.

IDENTIFICATION

1. Company Name:	2. Facility Name:	3. Facility ID No:
Western Trailer Co	Business Way	

4. Brief Project Description:	Permit Existing Truck Trailer Manufacturing Operation.

EMISSIONS UNIT (PROCESS) IDENTIFICATION & DESCRIPTION

5.	Emissions Unit (EU) Name:	BUILDING 10 OFFICE FURNACES (2)
6.	EU ID Number:	H9
7.	EU Type:	☐ New Source ☒ Unpermitted Existing Source ☐ Modification to a Permitted Source -- Previous Permit #: Date Issued:
8.	Manufacturer:	BRYANT
9.	Model:	PLUS 90
10..	Maximum Capacity:	60,000 BTU/HOUR
11.	Date of Construction:	
12.	Date of Modification (if any):	
13.	Is this a Controlled Emission Unit?	☒ No ☐ Yes If Yes, complete the following section. If No, go to line 22.

EMISSIONS CONTROL EQUIPMENT

14. Control Equipment Name and ID:		
15. Date of Installation:	16. Date of Modification (if any):	
17. Manufacturer and Model Number:		
18. ID(s) of Emission Unit Controlled:		
19. Is operating schedule different than emission units(s) involved?	☐ Yes ☐ No	
20. Does the manufacturer guarantee the control efficiency of the control equipment?	☐ Yes ☐ No (If Yes, attach and label manufacturer guarantee)	

	Pollutant Controlled					
	PM	PM10	SO_2	NOx	VOC	CO
Control Efficiency						

21. If manufacturer's data is not available, attach a separate sheet of paper to provide the control equipment design specifications and performance data to support the above mentioned control efficiency.

EMISSION UNIT OPERATING SCHEDULE (hours/day, hours/year, or other)

22.	Actual Operation:	4,380 HRS/YEAR
23.	Maximum Operation:	8,760 HRS/YEAR

REQUESTED LIMITS

24.	Are you requesting any permit limits?	☐ Yes ☒ No (If Yes, indicate all that apply below)
	☐ Operation Hour Limit(s):	
	☐ Production Limit(s):	
	☐ Material Usage Limit(s):	
	☐ Limits Based on Stack Testing:	Please attach all relevant stack testing summary reports
	☐ Other:	
25.	Rationale for Requesting the Limit(s):	

DEQ AIR QUALITY PROGRAM
1410 N. Hilton, Boise, ID 83706
For assistance, call the
Air Permit Hotline – 1-877-5PERMIT

Emissions Unit - General **Form EU0**
Revision 4
08/28/08

Please see instructions on page 2 before filling out the form.

IDENTIFICATION

1. Company Name:	2. Facility Name:	3. Facility ID No:
Western Trailer Co	Business Way	

4. Brief Project Description:	Permit Existing Truck Trailer Manufacturing Operation.

EMISSIONS UNIT (PROCESS) IDENTIFICATION & DESCRIPTION

5.	Emissions Unit (EU) Name:	BLAST CLEANING BUILDING UNIT HEATERS (2)
6.	EU ID Number:	H10
7.	EU Type:	☐ New Source ☒ Unpermitted Existing Source ☐ Modification to a Permitted Source -- Previous Permit #: Date Issued:
8.	Manufacturer:	REZNOR
9.	Model:	UDAS-300
10..	Maximum Capacity:	300,000 BTU/HOUR
11.	Date of Construction:	1998
12.	Date of Modification (if any):	
13.	Is this a Controlled Emission Unit?	☒ No ☐ Yes If Yes, complete the following section. If No, go to line 22.

EMISSIONS CONTROL EQUIPMENT

14. Control Equipment Name and ID:		
15. Date of Installation:	16. Date of Modification (if any):	
17. Manufacturer and Model Number:		
18. ID(s) of Emission Unit Controlled:		
19. Is operating schedule different than emission units(s) involved?	☐ Yes ☐ No	
20. Does the manufacturer guarantee the control efficiency of the control equipment?	☐ Yes ☐ No (If Yes, attach and label manufacturer guarantee)	

	Pollutant Controlled					
	PM	PM10	SO_2	NOx	VOC	CO
Control Efficiency						

21. If manufacturer's data is not available, attach a separate sheet of paper to provide the control equipment design specifications and performance data to support the above mentioned control efficiency.

EMISSION UNIT OPERATING SCHEDULE (hours/day, hours/year, or other)

22.	Actual Operation:	4,380 HRS/YEAR
23.	Maximum Operation:	8,760 HRS/YEAR

REQUESTED LIMITS

24.	Are you requesting any permit limits?	☐ Yes ☒ No (If Yes, indicate all that apply below)
	☐ Operation Hour Limit(s):	
	☐ Production Limit(s):	
	☐ Material Usage Limit(s):	
	☐ Limits Based on Stack Testing:	Please attach all relevant stack testing summary reports
	☐ Other:	
25.	Rationale for Requesting the Limit(s):	

DEQ AIR QUALITY PROGRAM
1410 N. Hilton, Boise, ID 83706
For assistance, call the
Air Permit Hotline – 1-877-5PERMIT

Emissions Unit - General **Form EU0**
Revision 4
08/28/08

Please see instructions on page 2 before filling out the form.

IDENTIFICATION

1. Company Name:	2. Facility Name:	3. Facility ID No:
Western Trailer Co	Business Way	

4. Brief Project Description:	Permit Existing Truck Trailer Manufacturing Operation.

EMISSIONS UNIT (PROCESS) IDENTIFICATION & DESCRIPTION

5.	Emissions Unit (EU) Name:	SOLVENT RECYCLING UNIT
6.	EU ID Number:	SR1
7.	EU Type:	☐ New Source ☒ Unpermitted Existing Source ☐ Modification to a Permitted Source -- Previous Permit #: Date Issued:
8.	Manufacturer:	BECCA
9.	Model:	9725
10..	Maximum Capacity:	6 GALLONS
11.	Date of Construction:	1998
12.	Date of Modification (if any):	
13.	Is this a Controlled Emission Unit?	☒ No ☐ Yes If Yes, complete the following section. If No, go to line 22.

EMISSIONS CONTROL EQUIPMENT

14. Control Equipment Name and ID:		
15. Date of Installation:	16. Date of Modification (if any):	
17. Manufacturer and Model Number:		
18. ID(s) of Emission Unit Controlled:		
19. Is operating schedule different than emission units(s) involved?	☐ Yes ☐ No	
20. Does the manufacturer guarantee the control efficiency of the control equipment?	☐ Yes ☐ No (If Yes, attach and label manufacturer guarantee)	

	Pollutant Controlled					
	PM	PM10	SO_2	NOx	VOC	CO
Control Efficiency						

21. If manufacturer's data is not available, attach a separate sheet of paper to provide the control equipment design specifications and performance data to support the above mentioned control efficiency.

EMISSION UNIT OPERATING SCHEDULE (hours/day, hours/year, or other)

22.	Actual Operation:	4,400 HRS/YEAR
23.	Maximum Operation:	8,760 HRS/YEAR

REQUESTED LIMITS

24.	Are you requesting any permit limits?	☐ Yes ☒ No (If Yes, indicate all that apply below)
	☐ Operation Hour Limit(s):	
	☐ Production Limit(s):	
	☐ Material Usage Limit(s):	
	☐ Limits Based on Stack Testing:	Please attach all relevant stack testing summary reports
	☐ Other:	
25.	Rationale for Requesting the Limit(s):	

DEQ AIR QUALITY PROGRAM
1410 N. Hilton, Boise, ID 83706
For assistance, call the
Air Permit Hotline – 1-877-5PERMIT

Emissions Unit - General **Form EU0**
Revision 4
08/28/08

Please see instructions on page 2 before filling out the form.

IDENTIFICATION

1. Company Name:	2. Facility Name:	3. Facility ID No:
Western Trailer Co	Business Way	

4. Brief Project Description:	Permit Existing Truck Trailer Manufacturing Operation.

EMISSIONS UNIT (PROCESS) IDENTIFICATION & DESCRIPTION

5.	Emissions Unit (EU) Name:	MEDIA BLAST
6.	EU ID Number:	MB1
7.	EU Type:	☐ New Source ☒ Unpermitted Existing Source ☐ Modification to a Permitted Source -- Previous Permit #: Date Issued:
8.	Manufacturer:	CLEMCO
9.	Model:	3661
10..	Maximum Capacity:	10 CUBIC FEET
11.	Date of Construction:	1998
12.	Date of Modification (if any):	
13.	Is this a Controlled Emission Unit?	☒ No ☐ Yes If Yes, complete the following section. If No, go to line 22.

EMISSIONS CONTROL EQUIPMENT

14. Control Equipment Name and ID:	GOLD SERIES FILTER F1	
15. Date of Installation:	1998	16. Date of Modification (if any):
17. Manufacturer and Model Number:	CAMFILL FARR GS-20	
18. ID(s) of Emission Unit Controlled:	MB1	
19. Is operating schedule different than emission units(s) involved?	☐ Yes ☒ No	
20. Does the manufacturer guarantee the control efficiency of the control equipment?	☐ Yes ☒ No (If Yes, attach and label manufacturer guarantee)	

	Pollutant Controlled					
	PM	PM10	SO_2	NOx	VOC	CO
Control Efficiency	99.7	99.7				

21. If manufacturer's data is not available, attach a separate sheet of paper to provide the control equipment design specifications and performance data to support the above mentioned control efficiency.

EMISSION UNIT OPERATING SCHEDULE (hours/day, hours/year, or other)

22.	Actual Operation:	4,400 HRS/YEAR
23.	Maximum Operation:	8,760 HRS/YEAR

REQUESTED LIMITS

24.	Are you requesting any permit limits?	☐ Yes ☒ No (If Yes, indicate all that apply below)
	☐ Operation Hour Limit(s):	
	☐ Production Limit(s):	
	☐ Material Usage Limit(s):	
	☐ Limits Based on Stack Testing:	Please attach all relevant stack testing summary reports
	☐ Other:	
25.	Rationale for Requesting the Limit(s):	

DEQ AIR QUALITY PROGRAM
1410 N. Hilton, Boise, ID 83706
For assistance, call the
Air Permit Hotline – 1-877-5PERMIT

Emissions Unit - General **Form EU0**
Revision 4
08/28/08

Please see instructions on page 2 before filling out the form.

IDENTIFICATION

1. Company Name:	2. Facility Name:	3. Facility ID No:
Western Trailer Co	Business Way	

4. Brief Project Description:	Permit Existing Truck Trailer Manufacturing Operation.

EMISSIONS UNIT (PROCESS) IDENTIFICATION & DESCRIPTION

5.	Emissions Unit (EU) Name:	BUILDING 10 MEDIA BLAST BOX
6.	EU ID Number:	MB2
7.	EU Type:	☐ New Source ☒ Unpermitted Existing Source ☐ Modification to a Permitted Source -- Previous Permit #: Date Issued:
8.	Manufacturer:	Cyclone Mfg.
9.	Model:	3624 Cycloneclone Mfg. model 3624
10..	Maximum Capacity:	
11.	Date of Construction:	1998
12.	Date of Modification (if any):	
13.	Is this a Controlled Emission Unit?	☒ No ☐ Yes If Yes, complete the following section. If No, go to line 22.

EMISSIONS CONTROL EQUIPMENT

14. Control Equipment Name and ID:	Donaldson Torit Cyclone Bag Dust Collector T3	
15. Date of Installation:	1998	16. Date of Modification (if any):
17. Manufacturer and Model Number:	Torit GS20-5	
18. ID(s) of Emission Unit Controlled:	MB2	
19. Is operating schedule different than emission units(s) involved?	☐ Yes ☒ No	
20. Does the manufacturer guarantee the control efficiency of the control equipment?	☐ Yes ☒ No (If Yes, attach and label manufacturer guarantee)	

	Pollutant Controlled					
	PM	PM10	SO_2	NOx	VOC	CO
Control Efficiency	99.9	99.9				

21. If manufacturer's data is not available, attach a separate sheet of paper to provide the control equipment design specifications and performance data to support the above mentioned control efficiency.

EMISSION UNIT OPERATING SCHEDULE (hours/day, hours/year, or other)

22.	Actual Operation:	4,000 HRS/YEAR
23.	Maximum Operation:	8,760 HRS/YEAR

REQUESTED LIMITS

24.	Are you requesting any permit limits?	☐ Yes ☒ No (If Yes, indicate all that apply below)
	☐ Operation Hour Limit(s):	
	☐ Production Limit(s):	
	☐ Material Usage Limit(s):	
	☐ Limits Based on Stack Testing:	Please attach all relevant stack testing summary reports
	☐ Other:	
25.	Rationale for Requesting the Limit(s):	

DEQ AIR QUALITY PROGRAM
1410 N. Hilton, Boise, ID 83706
For assistance, call the
Air Permit Hotline – 1-877-5PERMIT

Emissions Unit - General **Form EU0**
Revision 4
08/28/08

Please see instructions on page 2 before filling out the form.

IDENTIFICATION

1. Company Name:	2. Facility Name:	3. Facility ID No:
Western Trailer Co	Business Way	

4. Brief Project Description:	Permit Existing Truck Trailer Manufacturing Operation.

EMISSIONS UNIT (PROCESS) IDENTIFICATION & DESCRIPTION

5.	Emissions Unit (EU) Name:	WELDING
6.	EU ID Number:	W1
7.	EU Type:	☐ New Source ☒ Unpermitted Existing Source ☐ Modification to a Permitted Source -- Previous Permit #: Date Issued:
8.	Manufacturer:	SEE ATTACHED LIST
9.	Model:	SEE ATTACHED LIST
10..	Maximum Capacity:	
11.	Date of Construction:	1998
12.	Date of Modification (if any):	
13.	Is this a Controlled Emission Unit?	☒ No ☐ Yes If Yes, complete the following section. If No, go to line 22.

EMISSIONS CONTROL EQUIPMENT

14. Control Equipment Name and ID:	
15. Date of Installation:	16. Date of Modification (if any):
17. Manufacturer and Model Number:	
18. ID(s) of Emission Unit Controlled:	
19. Is operating schedule different than emission units(s) involved?	☐ Yes ☐ No
20. Does the manufacturer guarantee the control efficiency of the control equipment?	☐ Yes ☐ No (If Yes, attach and label manufacturer guarantee)

	Pollutant Controlled					
	PM	PM10	SO_2	NOx	VOC	CO
Control Efficiency						

21. If manufacturer's data is not available, attach a separate sheet of paper to provide the control equipment design specifications and performance data to support the above mentioned control efficiency.

EMISSION UNIT OPERATING SCHEDULE (hours/day, hours/year, or other)

22.	Actual Operation:	4,400 HRS/YEAR
23.	Maximum Operation:	8,760 HRS/YEAR

REQUESTED LIMITS

24.	Are you requesting any permit limits?	☐ Yes ☒ No (If Yes, indicate all that apply below)
	☐ Operation Hour Limit(s):	
	☐ Production Limit(s):	
	☐ Material Usage Limit(s):	
	☐ Limits Based on Stack Testing:	Please attach all relevant stack testing summary reports
	☐ Other:	
25.	Rationale for Requesting the Limit(s):	

Western Trailer Co.
Form EUO Addendum

Emissions Unit Name: Welding

1. U1030515267	10. KK048332 bldg.8
LINC. 300	TIG SUB AL
Year: 5/2003	TIG runner
Blg 10	Year 7/1999
	5/29/2002
2. U1060608171	5/14/2002
LINC. CV 305	5/2/2001
Year: 7/2006	Blg 8
D9	
	11. U1990605883
3.U1060405313	Linc. CV 300
LINC. CV 305	Year 6/1999
Year 4/2006	Blg 10
G10	
	12. U1060312948
4. U1990418121	Linc CV 305
LINCOLN CV300	Year 2006
Year: 4/1999	Blg 10
3/19/2002	
6/16/2003	13. U1060312927
M6	LINC. CV305 P&P LINE
	Year:3/2006
5. MC240265U	D8
Miller Invision 352mpa	
final subs large	14. U 01000511055
Year: 08/2012	LINC. P&P LINE
M6 Portalble Al.	Year: 1/ 2000
	9/20/2002
6. U1990906869	9/24/2003
LINC. SUBS	4/19/2004
Year: 9/1999	D9
D13	
	15.U106045310
7. UI990612635	Linc.CV 305
LINC. MIX LINE	Year 2006
Year: 6/1999	Blg 10
6/4/2004	
A10	16. UI990208177
	LINC. SUBS
8. U1070812774	Year: 2/1999
LINC. CV305	G10
Year: 2011	1/23/2001
G10	10/4/2004
9. MC220589U	17. LH310839A
Miller Invision 352mpa	Invision 456
Blg 8	Year 2007
Year 5/2012	

18. U1021008597	28. STUD GUN
DC 1000	PRO WELD
Beam Welder	S/N: 322 1397 602
Year: 10/2002	
12/2/2002	29. PORT. PLASMA
	POWERMAX 900
19. U1020110420	S/N: 900 015494
DC 1000	6/11/2002
Beam Welder	2/24/2003
Year: 1/ 2002	
	30. LC722096 bldg.10
20. V1040418845	LE024137
CV 300	MILLER TIG RUNNER
FLAT LINE	Year: 7/2003
Year: 2004	Blg 8
D12	4/21/2004
	4/28/2004
21. U1060405294	
Linc CV 305	31. U1040624346
Year 6/2006	LINCOLN CV 300
Blg 10	Year: 06/2004
	D9
22.Power Max Plasma	
1000 029494	32. LG200585A
Blg 10	Miller Invision 354MP
	Year 7/2006
23. U1110614077	Blg 8
LINC. CV305	
Year 6/2011	33. U1040904067
G12	LINCOLN CV 300
	Year: 09/2004
24. KF826838	G12
MILL. ELITE FINAL	
Year: 7/ 1995	34. LE247784
Changed to air arc	MILLER PORT
	Year: 01/2004
25.Power Max Plasma	
1000 11575	35. U1050808642
	LINC. POWERWAVE
26. U1060405311	Year 08/2005
Linc CV 305	ALUMINUM bldg.10
Year 2006	
Blg 10	36. LF294697/LF282818
	MILLER TIG bldg.10
27. LH3904 01 1	Year 07/2005
Miller TIG Dynasty 350	TIG runner
Year 01/2007	Blg 8
Blg 8	

37. LE323046	46. U1011114738
MILLER ALUMINUM	Year 11/2001
Year 04/2004	D13
FINAL ELITE	
	47. UI990702462
38.LG400251L	LINC. SUBS
Miller TIG runner	Year 07/1999
Dynasty 300DX	G9
Year 7/2006	
Blg 8	48. U1980113907
	Year 01/1998
39. U1050521586	D13
LINCOLN CV 305	
Year 05/2005	49. U1020810068
G8	Year 08/2002
	G13
40. U1050316833	
LINCOLN CV 305	50. KG046689
ELITE LINE	MILL. JIGS&FIX.
Year 03/2005	Year 01/1996
D11	
	51. U1060405309
41. U1000511113	Linc CV 305
CV300 SUBS	Year 2006
Year 05/2000	Blg 10
G9	
	52. U1970711027
42. U1060312947	LINC. SUBS
LINCOLN CV 305	Year 07/0997
Year 03/2006	D10
ELITE/MIX LINE	9/22/2004
G11	
	53. U1060405308
43. U1041200732	Linc CV 305
LINCOLN CV 300	Year 2006
Year 12/2004	Blg 10
ELITE LINE	
G11	54. U1040418848
	Year 04/2004
44.MC011645A	D11
Invision 352 mpa	
Miller	55. MC120380A
Year 03/2012	Miller Invision 352mpa
Blg 8	Blg 8
	Year 5/2012
45. LG020329A	Blg 8
Miller Invision 456	
Year 01/2006	

56. KH506947	65. U1000511094
MILLER PORT.250	LINC. MIX LINE
Year 07/1997	Year 5/1/2000
	D10
57. KH552794	10/21/2003
MILL. PORT.	
Year 07/1997	66. UI9907211993
8/20/2001	LINC. AXLES
2/27/2003	Year 07/1999
	Blg 10
58. AC619610	11/27/2001
Linc DC 1000	
Beam Welder	67. KD552392
Year 10/1996	MILL SUB AL
	Year 7/1993
59. AC619611	
Linc DC 1000	68. 295795
Beam Welder	LINC. STICK
Year 10/1996	Year old
60. MC011645A	69 SN unknown
Miller Invision 352mpa	Linc CV305
Blg 8	Blg 10
Year 5/2012	
	70. U1041200733
61. KJ084274	LINCOLN CV 300
MILL PORT.	ELITE LINE
Year 01/1998	Year 12/2004
8/20/2001	G13
62.U1060405307	71. LE323057
Linc CV 305	MILLER ALUMINUM
Year 2006	SUB STEEL
Blg 10	Year 07/2004
	Blg 8
63. UI981214006	
LINC. P&P LINE	72. MC011645A
Year 12/1998	Miller Invision 352mpa
G8	year 5/2012
	Blg 8
64. UI990208080	
LINC. ELITE	73. LG040633L
Year 02/1999	Dynasty 300DX
D12	TIG runner
	Year 01/2006
	74.LG020328A
	Miller Invision 456
	Year 01/2006

75.U1020807005	84. ME170404L
Linc Power Mig	Miller Tig
U1020807005	Year 2014
Year 2002	Bldg. 8
76. LF282414	
miller al Invision	
Year 07/2005	
77. U1060405304	
LINC cv305	
Year 04/2006	
G14	
78. U1050316839	
LINCOLN CV 305	
ELITE/MIX LINE	
Year 03/2005	
G11	
79. U1140103393	
LINCOLN CV 305	
Year 2014	
G10	
80. U1140103391	
LINCOLN CV 305	
Year 2014	
A5	
81. U1140200936	
LINCOLN CV 305	
Year 2014	
D4	
82. U1140104926	
LINCOLN CV 305	
Year 2014	
D5	
83. MA250322A	
Miller Invision 352MPa	
(Duel Feeder)	
Year 2014	
Bldg. 10	

DEQ AIR QUALITY PROGRAM
1410 N. Hilton, Boise, ID 83706
For assistance, call the
Air Permit Hotline – 1-877-5PERMIT

Emissions Unit - General **Form EU0**
Revision 4
08/28/08

Please see instructions on page 2 before filling out the form.

IDENTIFICATION

1. Company Name:	2. Facility Name:	3. Facility ID No:
Western Trailer Co	Business Way	

4. Brief Project Description:	Permit Existing Truck Trailer Manufacturing Operation.

EMISSIONS UNIT (PROCESS) IDENTIFICATION & DESCRIPTION

5.	Emissions Unit (EU) Name:	BUILDING 1 MULTICAM ROUTER
6.	EU ID Number:	R1
7.	EU Type:	☐ New Source ☒ Unpermitted Existing Source ☐ Modification to a Permitted Source -- Previous Permit #: Date Issued:
8.	Manufacturer:	Multicam
9.	Model:	55000
10..	Maximum Capacity:	
11.	Date of Construction:	1998
12.	Date of Modification (if any):	
13.	Is this a Controlled Emission Unit?	☒ No ☐ Yes If Yes, complete the following section. If No, go to line 22.

EMISSIONS CONTROL EQUIPMENT

14. Control Equipment Name and ID:	Donaldson Torit Cyclone Bag Dust Collector T1	
15. Date of Installation:	1998	16. Date of Modification (if any):
17. Manufacturer and Model Number:	Torit GS20-5	
18. ID(s) of Emission Unit Controlled:	R1	
19. Is operating schedule different than emission units(s) involved?	☐ Yes ☒ No	
20. Does the manufacturer guarantee the control efficiency of the control equipment?	☐ Yes ☒ No (If Yes, attach and label manufacturer guarantee)	

	Pollutant Controlled					
	PM	PM10	SO_2	NOx	VOC	CO
Control Efficiency	99.9	99.9				

21. If manufacturer's data is not available, attach a separate sheet of paper to provide the control equipment design specifications and performance data to support the above mentioned control efficiency.

EMISSION UNIT OPERATING SCHEDULE (hours/day, hours/year, or other)

22.	Actual Operation:	4,400 HRS/YEAR
23.	Maximum Operation:	8,760 HRS/YEAR

REQUESTED LIMITS

24.	Are you requesting any permit limits?	☐ Yes ☒ No (If Yes, indicate all that apply below)
	☐ Operation Hour Limit(s):	
	☐ Production Limit(s):	
	☐ Material Usage Limit(s):	
	☐ Limits Based on Stack Testing:	Please attach all relevant stack testing summary reports
	☐ Other:	
25.	Rationale for Requesting the Limit(s):	

DEQ AIR QUALITY PROGRAM
1410 N. Hilton, Boise, ID 83706
For assistance, call the
Air Permit Hotline – 1-877-5PERMIT

Emissions Unit - General **Form EU0**
Revision 4
08/28/08

Please see instructions on page 2 before filling out the form.

IDENTIFICATION

1. Company Name:	2. Facility Name:	3. Facility ID No:
Western Trailer Co	Business Way	

4. Brief Project Description:	Permit Existing Truck Trailer Manufacturing Operation.

EMISSIONS UNIT (PROCESS) IDENTIFICATION & DESCRIPTION

5.	Emissions Unit (EU) Name:	BUILDING 1 KOMO ROUTER
6.	EU ID Number:	R2
7.	EU Type:	☐ New Source ☒ Unpermitted Existing Source ☐ Modification to a Permitted Source -- Previous Permit #: Date Issued:
8.	Manufacturer:	Komo
9.	Model:	M2 512S SHO
10..	Maximum Capacity:	
11.	Date of Construction:	1998
12.	Date of Modification (if any):	
13.	Is this a Controlled Emission Unit?	☒ No ☐ Yes If Yes, complete the following section. If No, go to line 22.

EMISSIONS CONTROL EQUIPMENT

14. Control Equipment Name and ID:	Donaldson Torit Cyclone Bag Dust Collector T2	
15. Date of Installation:	1998	16. Date of Modification (if any):
17. Manufacturer and Model Number:	Torit GS20-5	
18. ID(s) of Emission Unit Controlled:	R2	
19. Is operating schedule different than emission units(s) involved?	☐ Yes ☒ No	
20. Does the manufacturer guarantee the control efficiency of the control equipment?	☐ Yes ☒ No (If Yes, attach and label manufacturer guarantee)	

	Pollutant Controlled					
	PM	PM10	SO_2	NOx	VOC	CO
Control Efficiency	99.9	99.9				

21. If manufacturer's data is not available, attach a separate sheet of paper to provide the control equipment design specifications and performance data to support the above mentioned control efficiency.

EMISSION UNIT OPERATING SCHEDULE (hours/day, hours/year, or other)

22.	Actual Operation:	4,400 HRS/YEAR
23.	Maximum Operation:	8,760 HRS/YEAR

REQUESTED LIMITS

24.	Are you requesting any permit limits?	☐ Yes ☒ No (If Yes, indicate all that apply below)
	☐ Operation Hour Limit(s):	
	☐ Production Limit(s):	
	☐ Material Usage Limit(s):	
	☐ Limits Based on Stack Testing:	Please attach all relevant stack testing summary reports
	☐ Other:	
25.	Rationale for Requesting the Limit(s):	

DEQ AIR QUALITY PROGRAM
1410 N. Hilton, Boise, ID 83706
For assistance, call the
Air Permit Hotline – 1-877-5PERMIT

Emissions Unit - General **Form EU0**
Revision 4
08/28/08

Please see instructions on page 2 before filling out the form.

IDENTIFICATION

1. Company Name:	2. Facility Name:	3. Facility ID No:
Western Trailer Co	Business Way	

4. Brief Project Description:	Permit Existing Truck Trailer Manufacturing Operation.

EMISSIONS UNIT (PROCESS) IDENTIFICATION & DESCRIPTION

5.	Emissions Unit (EU) Name:	BUILDING 1 ALUMINUM SAW
6.	EU ID Number:	S1
7.	EU Type:	☐ New Source ☒ Unpermitted Existing Source ☐ Modification to a Permitted Source -- Previous Permit #: Date Issued:
8.	Manufacturer:	SOCO
9.	Model:	MC-260N/FA
10..	Maximum Capacity:	
11.	Date of Construction:	1998
12.	Date of Modification (if any):	
13.	Is this a Controlled Emission Unit?	☒ No ☐ Yes If Yes, complete the following section. If No, go to line 22.

EMISSIONS CONTROL EQUIPMENT

14. Control Equipment Name and ID:	Donaldson Torit Cyclone Bag Dust Collector T3	
15. Date of Installation:	1998	16. Date of Modification (if any):
17. Manufacturer and Model Number:	Torit GS20-5	
18. ID(s) of Emission Unit Controlled:	R3	
19. Is operating schedule different than emission units(s) involved?	☐ Yes ☒ No	
20. Does the manufacturer guarantee the control efficiency of the control equipment?	☐ Yes ☒ No (If Yes, attach and label manufacturer guarantee)	

	Pollutant Controlled					
	PM	PM10	SO_2	NOx	VOC	CO
Control Efficiency	99.9	99.9				

21. If manufacturer's data is not available, attach a separate sheet of paper to provide the control equipment design specifications and performance data to support the above mentioned control efficiency.

EMISSION UNIT OPERATING SCHEDULE (hours/day, hours/year, or other)

22.	Actual Operation:	4,000 HRS/YEAR
23.	Maximum Operation:	8,760 HRS/YEAR

REQUESTED LIMITS

24.	Are you requesting any permit limits?	☐ Yes ☒ No (If Yes, indicate all that apply below)
	☐ Operation Hour Limit(s):	
	☐ Production Limit(s):	
	☐ Material Usage Limit(s):	
	☐ Limits Based on Stack Testing:	Please attach all relevant stack testing summary reports
	☐ Other:	
25.	Rationale for Requesting the Limit(s):	

DEQ AIR QUALITY PROGRAM
1410 N. Hilton, Boise, ID 83706
For assistance, call the
Air Permit Hotline – 1-877-5PERMIT

Emissions Unit - General **Form EU0**
Revision 4
08/28/08

Please see instructions on page 2 before filling out the form.

IDENTIFICATION

1. Company Name:	2. Facility Name:	3. Facility ID No:
Western Trailer Co	Business Way	

4. Brief Project Description:	Permit Existing Truck Trailer Manufacturing Operation.

EMISSIONS UNIT (PROCESS) IDENTIFICATION & DESCRIPTION

5.	Emissions Unit (EU) Name:	BUILDING 1 DEBURRING MACHINES (2)
6.	EU ID Number:	D1
7.	EU Type:	☐ New Source ☒ Unpermitted Existing Source ☐ Modification to a Permitted Source -- Previous Permit #: Date Issued:
8.	Manufacturer:	COSTA
9.	Model:	MD4CVC1150
10..	Maximum Capacity:	APPROXIMATELY 10,000 LBS/DAY
11.	Date of Construction:	OCT. 2015 AND MAY 2016
12.	Date of Modification (if any):	
13.	Is this a Controlled Emission Unit?	☒ No ☐ Yes If Yes, complete the following section. If No, go to line 22.

EMISSIONS CONTROL EQUIPMENT

14. Control Equipment Name and ID:	DONALDSON TORRITT DOWNFLOW II T4
15. Date of Installation:	Oct 2015 16. Date of Modification (if any):
17. Manufacturer and Model Number:	DONALDSON TORRITT DOWNFLOW II DFT 3-18
18. ID(s) of Emission Unit Controlled:	D1
19. Is operating schedule different than emission units(s) involved?	☐ Yes ☒ No
20. Does the manufacturer guarantee the control efficiency of the control equipment?	☐ Yes ☐ No (If Yes, attach and label manufacturer guarantee)

	Pollutant Controlled					
	PM	PM10	SO_2	NOx	VOC	CO
Control Efficiency	95	95				

21. If manufacturer's data is not available, attach a separate sheet of paper to provide the control equipment design specifications and performance data to support the above mentioned control efficiency.

EMISSION UNIT OPERATING SCHEDULE (hours/day, hours/year, or other)

22.	Actual Operation:	4,400 HRS/YEAR
23.	Maximum Operation:	8,760 HRS/YEAR

REQUESTED LIMITS

24.	Are you requesting any permit limits?	☐ Yes ☒ No (If Yes, indicate all that apply below)
	☐ Operation Hour Limit(s):	
	☐ Production Limit(s):	
	☐ Material Usage Limit(s):	
	☐ Limits Based on Stack Testing:	Please attach all relevant stack testing summary reports
	☐ Other:	
25.	Rationale for Requesting the Limit(s):	

DEQ AIR QUALITY PROGRAM
1410 N. Hilton, Boise, ID 83706
For assistance, call the
Air Permit Hotline – 1-877-5PERMIT

Emissions Units - Spray Paint Booth Information **Form EU3**
Revision 5
08/28/08

Please see instructions on page 2 before filling out the form.

IDENTIFICATION

1. Company Name:	2. Facility Name:	3. Facility ID No:
Western Trailer	Businsess Way	

4. Brief Project Description: Permit Existing Truck Trailer Manufacturing Operation.

BOOTH INFORMATION

5. Booth Type: ☐ New Booth ☒ Unpermitted Existing Booth
☐ Modification to a Permitted Booth, Permit #: , Date Issued:

6. Construction Date: 1998

SPRAY GUN DESCRIPTION AND SPECIFICATIONS

Gun No.	7. Manufacturer	8. Model	9. Type	10. Transfer Eff. %	11. Rated Capacity (gal/hr)
1	Graco	G-40	Air Assisted Aireless HVLP	85%	
2	Graco	Pro XP 85	Electrostatic	85%	
3					
4					

Number of guns to be used simultaneously:

SPRAY MATERIAL DESCRIPTION AND SPECIFICATIONS

12. Type of Spray Material Used	13. Type of Material Coated	14. Max. Usage (gal/day)	15. Solid TAP/HAP Content (lb/gal)	16. VOC TAP/HAP Content (lb/gal)	17. MSDS (Y/N)
See Table 4-1	Steel	See Table 4-1	See Table 4-1	See Table 4-1	Y (ApndxB)

REQUEST FOR PERMIT LIMITATIONS

18. Are you requesting any permit limits? ☐ No ☒ Yes. If Yes, check all that apply below and fill in requested limit(s)

☐ Operation Hour Limits:
☐ Production Limits:
☒ Material Usage Limits: See Table 4-1
☐ Other:

19. Rationale for Requesting the Limit(s):

EMISSION CONTROL DEVICE (FILTER [b]) DESCRIPTION AND SPECIFICATIONS

Stack Served	20. Filter Manufacturer	21. Model	22. PM Control Efficiency(%)[a]	23. Dimension (Total Area, Thickness and Number of Filters)
Stack 1	Air Technologies	Ultra II	96.7	33.3 sq. ft.; 1 in. thick, (12) 20 in. X 20 in.
Stack 2	Air Technologies	Ultra	96.6	254.3 sq. ft.; 1 in. thick, (6) 28 in. X 218 in.
Stack 3				
Stack 4				

Notes: a. Provide either stack test data or vendor's documentation to support the control efficiency specified above.
b. Fill out and submit appropriate control equipment form(s) if this booth has a control device(s) other than a filter system.

BOOTH OPERATING SCHEDULE (indicate hours/day, hours/year, or other)

24. Actual Operation:	25. Maximum Operation:
20 hrs/day, 4 days/week, 52 weeks/year, 4,160 hours/year	24 hrs/day, 7 days/week, 52 weeks/year, 8,760 hours/year

IDAHO DEPARTMENT OF ENVIRONMENTAL QUALITY
AIR QUALITY DIVISION
1410 N. Hilton, Boise, ID 83706
For assistance, call the
Air Permit Hotline – 1-877-5PERMIT

Preapplication Meeting Information Form FRA (Federal Requirements Applicability) - Regulatory Review

In each box in the table below, CTRL+click on the blue underlined text for instructions and information.

IDENTIFICATION	
1. Company Name:	2. Facility Name:
Western Trailer Co	Business Way
3. Brief Project Description:	Permit Existing Truck Trailer Manufacturing Operation.

APPLICABILITY DETERMINATION	
4. List all applicable subparts of the New Source Performance Standards (NSPS) (40 CFR part 60). List all non-applicable subparts of the NSPS which may appear to apply to the facility but do not. Examples of NSPS-affected emissions units include internal combustion engines, boilers, turbines, etc. Applicant must thoroughly review the list of affected emissions units.	List of all applicable subpart(s): List of all non-applicable subpart(s) which may appear to apply but do not: ☒ Not Applicable
5. List applicable subpart(s) of the National Emission Standards for Hazardous Air Pollutants (NESHAPs) (40 CFR part 61 and 40 CFR part 63). List all non-applicable subparts of the NESHAP which may appear to apply to the facility but do not. Examples of affected emission units include solvent cleaning operations, industrial cooling towers, paint stripping and miscellaneous surface coating. Reference EPA's webpage on NESHAPs for more information.	List of all applicable subpart(s): See Narrative Section 8 List of all non-applicable subpart(s) which may appear to apply but do not: ☐ Not Applicable
6. For each subpart identified above, conduct a complete regulatory analysis using the instructions and referencing the example on the following pages. **Note** - Regulatory reviews must be submitted with sufficient detail so that DEQ can verify applicability and document in legal terms why the regulation does or does not apply. Regulatory reviews submitted with insufficient detail will be determined incomplete.	☒ A detailed regulatory review is provided (Follow instructions and example). See Narrative Section 8 ☐ DEQ has already been provided a detailed regulatory review. Give a reference to the document including the date.

AIR QUALITY PERMIT TO CONSTRUCT
APPLICATION FORMS AND DOCUMENTATION
Western Trailer Co.
P. O. 5598
Boise, ID 83705-0598

September 22, 2016

Prepared for: Western Trailer Co.
P. O. 5598
Boise, ID 83705-0598

For the Facility at: 6701 Business Way
Boise, ID 83716

Prepared by: TORF Environmental Management
3459 E. Boulder Heights Drive
Boise, Idaho 83712

(208) 345-7222
www.torf.us

Mark Torf, Senior Professional
(208) 345-7222

Neil Fox, Senior Engineer
(208) 331-9204

TORF
ENVIRONMENTAL
MANAGEMENT

Table of Contents

1. SUMMARY 1-1

2. GENERAL INFORMATION –FORM GI DOCUMENTATION 2-1

3. GENERAL EMISSION UNITS – FORM EU0 DOCUMENTATION 3-1
3.1 Combustion Units – Natural Gas Heaters 3-1
3.1.1 Paint Building Make-up Air Heaters – MAU1 and MAU2 3-1
3.1.2 Paint Building Paint Booth Heater – MAU3 3-1
3.1.3 Building 1 Space Heater - Exempt – H1 3-2
3.1.4 Building 1 Unit Heaters – H2 3-2
3.1.5 Building 1 Tool Room Furnace - Exempt – H3 3-3
3.1.6 Building 1 Office Furnaces - Exempt – H4 3-3
3.1.7 Building 8 Unit Heaters - Exempt – H5 3-4
3.1.8 Building 8 Training Room Furnace – Exempt – H6 3-4
3.1.9 Building 10 Welding Area Unit Heaters – H7 3-5
3.1.10 Building 10 Machine Shop Area Unit Heaters – Exempt – H8 3-5
3.1.11 Building 10 Office Furnaces - Exempt – H9 3-6
3.1.12 Blast Cleaning Building Unit Heaters – Exempt – H10 3-6
3.2 Paint Solvent Recycling – SR1 3-20
3.3 Media Blast Cleaning 3-22
3.3.1 Blast Building – MB1 3-22
3.3.2 Building 10 Media Blasting – MB2 3-22
3.4 Welding – W1 3-26
3.5 Metal Cutting 3-34
3.5.1 Metal Cutting MultiCam and Komo Routers Building 1 – R1 and R2 3-34
3.5.2 Metal Cutting Saw Building 10 – S1 3-34
3.5.3 Amount of Aluminum Cut 3-34
3.6 Deburring – D1 3-39

4. SPRAY PAINT BOOTH – FORM EU3 DOCUMENTATION 4-1

5. EMISSION INVENTORY WORKBOOK FORMS EI DOCUMENTATION 5-1
5.1 New Source Review (NSR) Regulated Pollutants Potential to Emit 5-1
5.2 Criteria Pollutants Potential to Emit 5-1

Table of Contents – Continued

5.3 Toxic Air Pollutant Facility-Wide Emissions 5-2
5.4 Hazardous Air Pollutant Facility-Wide Emissions 5-2

6. PLOT PLAN – FORM PP DOCUMENTATION 6-1
6.1 Facility Boundary 6-1
6.2 Building Dimensions 6-1

7. Air Dispersion Modeling 7-3

8. FEDERAL REGULATION APPLICABILITY – FORM FRA DOCUMENTATION 8-1
8.1 New Source Performance Standards (40 CFR 60) 8-1
8.2 National Emission Standards for Hazardous Air Pollutants (40 CFR 63) 8-1
8.2.1 NESHAP Subpart MMMM Regulatory Review 8-1
8.2.2 NESHAP Subpart HHHHHH Regulatory Review 8-1
8.2.3 NESHAP Subpart XXXXXX Regulatory Review 8-6
8.3 Prevention of Significant Deterioration 8-8

9. STATE OF IDAHO REGULATORY REVIEW 9-1
9.1 Certification of Documents- 58.01.01.123 9-1
9.2 Demonstration of Preconstruction Compliance with Toxic Standards- 58.01.01.210 9-1
9.3 Ambient Air Quality Standards for Specific Air Pollutants- 58.01.01.577 9-1
9.4 Toxic Air Pollutants Non-carcinogenic Increments – 58.01.01.585 9-2
9.5 Toxic Air Pollutants Carcinogenic Increments – 58.01.01.586 9-2
9.6 New Source Performance Standards – 58.01.01.590 9-2
9.7 National Emission Standards for Hazardous Air Pollutants – 58.01.01.591 9-2
9.8 Visible Emissions – 58.01.01.625 9-2
9.9 Rules for Control of Fugitive Dust – 58.01.01.650 9-2
9.10 Fuel Burning Equipment- Particulate Matter – 58.01.01.675 9-2
9.11 Fuel Burning Equipment- Particulate Matter – 58.01.01.676 9-2
9.12 Fuel Burning Equipment- Particulate Matter – 58.01.01.677 9-3
9.13 Standards for Minor and Existing Sources – 58.01.01.677 9-3
9.14 Particulate Matter- Process Weight Limitation – 58.01.01.700 9-3

10. CERTIFICATION 10-1

List of Tables

Table 3-1 Paint Shop Drying Bay Combustion Emissions 3-7
Table 3-2 Paint Shop Wash Bay Combustion Emissions 3-8
Table 3-3 Paint Shop Paint Booth Combustion Emissions 3-9
Table 3-4 Building 1 Space Heater 1 - Exempt Combustion Emissions 3-10
Table 3-5 Building 1 Unit Heaters - Exempt Combustion Emissions 3-11
Table 3-6 Building 1 Tool Room Bryant Furnace Combustion Emissions 3-12
Table 3-7 Building 1 Office Furnace Combustion Emissions 3-13
Table 3-8 Building 8 Unit Heaters – Exempt Combustion Emissions 3-14
Table 3-9 Building 8 Training Room Furnace Combustion Emissions 3-15
Table 3-10 Building 10 Welding Area Unit Heaters - Exempt Emissions 3-16
Table 3-11 Building 10 Machine Shop Area Unit Heaters - Exempt Emissions 3-17
Table 3-12 Building 10 Office Furnaces Combustion Emissions 3-18
Table 3-13 Blast Cleaning Building Unit Heater - Exempt Combustion Emissions 3-19
Table 3-14 Solvent Recycling Emissions 3-21
Table 3-15 Blast Building Emissions 3-24
Table 3-16 Building 10 Blast Box Emissions 3-25
Table 3-17 Estimated Welding Wire Use Distribution at Building Use Areas 3-26
Table 3-18 Building 1 Welding Emissions 3-28
Table 3-19 Building 8 Welding Emissions 3-30
Table 3-20 Building 10 Welding Emissions 3-32
Table 3-21 Metal Cutting Routers Building 1 3-37
Table 3-22 Metal Cutting Saw Building 10 3-38
Table 3-22 Deburring Emissions 3-40
Table 4-1 Coating Use and Coating Constituent Amounts 4-4
Table 4-2 Paint Booth Operations Emissions Summary 4-7
Table 5-1 Unrestricted Uncontrolled Facility-Wide NSR Regulated Pollutant Emissions 5-3
Table 5-2 Restricted Controlled Facility-Wide NSR Regulated Pollutant Emissions 5-4
Table 5-3 Facility-Wide Regulated Criteria Pollutant Emissions 5-5
Table 5-4 Facility Wide Uncontrolled Facility-Wide TAP Pollutant Emissions 5-6
Table 5-5 Facility Wide Controlled Facility-Wide TAP Pollutant Emissions 5-7
Table 5-6 Facility-Wide Hazardous Air Pollutant Emission Summary 5-8
Table 8-1 PSD Source Categories 8-8

Table of Contents – Continued

List of Figures

Figure 1 Site Vicinity 1-2
Figure 2 Plot Plan 6-2

Appendices

Appendix A: Equipment Specifications & Vendor Correspondence ..... Tab A
Appendix B: Material Composition Data (MSDS) ..... Tab B
Appendix C: IDEQ Toxic Air Pollutant (TAP) Preconstruction Compliance Application Completeness Checklist ..... Tab C
Appendix D: Air Dispersion Modeling Protocol Report ..... Tab D
Appendix E: Computer Disc Containing–
Complete Application Document – Adobe Acrobat Format
Modeling Files – Zip compression
Emission Inventory MS Excel Worksheets
..... Tab E

AIR QUALITY PERMIT TO CONSTRUCT APPLICATION
Western Trailer Co.
6701 Business Way, Boise, ID 83716

1. SUMMARY

Western Trailer Co. (Western Trailer) proposes to obtain an Air Quality Permit to Construct (PTC) for its truck manufacturing facility at 6701 Business Way in Boise, Idaho. The facility is located southeast of the Boise airport, near the Gowen Road industrial park area and I-84 (see Figure 1 Vicinity Map).

Western Trailer recently became aware of the Idaho PTC requirements and is submitting this information in an effort to comply with regulatory requirements. Existing emission sources at the facility include natural gas direct-fired unit heaters, natural gas indirect-fired unit heaters, paint spray booth, paint solvent recycling, blast-cleaning booth, welding, and aluminum metal cutting machines. The results of the inventory of potential emissions and calculation of estimated regulated air emissions demonstrate that the facility is eligible to receive an Idaho Air Quality Permit to Construct (PTC).

The facility is not a major facility according to the Prevention of Significant Deterioration (PSD) and Permit to Construct standards for regulated pollutants.[1] Emission calculations demonstrate that post-project NSR regulated pollutant rates are less than 100 tons per year under the proposed production limits. Emissions of individual Hazardous Air Pollutants (HAP) are less than 10 tons per year and emissions of combined HAP are less than 25 tons per year. Therefore, the facility is not a major facility based on the Title V standards for criteria or Hazardous Air Pollutants (HAP).

On a site-wide basis, all criteria pollutants emitted at these sources are cumulatively emitted at rates Below Regulatory Concern (BRC).[2] In accordance with the IDEQ modeling guidance, if the emissions of all criteria pollutants except VOCs are less than the BRC threshold, criteria pollutants do not have to be modeled.[3] Controlled emissions of 5 Toxic Air Pollutants (TAP)–arsenic, cadmium, chromium+6, formaldehyde, nickel–exceed Screening Emission Levels and were modeled.[4,26]

---

[1] Idaho Department of Environmental Quality (IDEQ), Rules for the Control of Air Pollution in Idaho, Idaho Administrative Procedures Act IDAPA) 58 Title 01, Chapter 01, Section 200.

[2] Ibid., Section 008.10.

[3] Idaho Department of Environmental Quality, *State of Idaho Guideline for Air Quality Impact Analyses*, Section 3.1, Doc. ID AQ-011, Boise, Idaho, September 2013, page 11.

[4] Idaho Department of Environmental Quality (IDEQ), Rules for the Control of Air Pollution in Idaho, Idaho Administrative Procedures Act IDAPA) 58 Title 01, Chapter 01, Section 208.

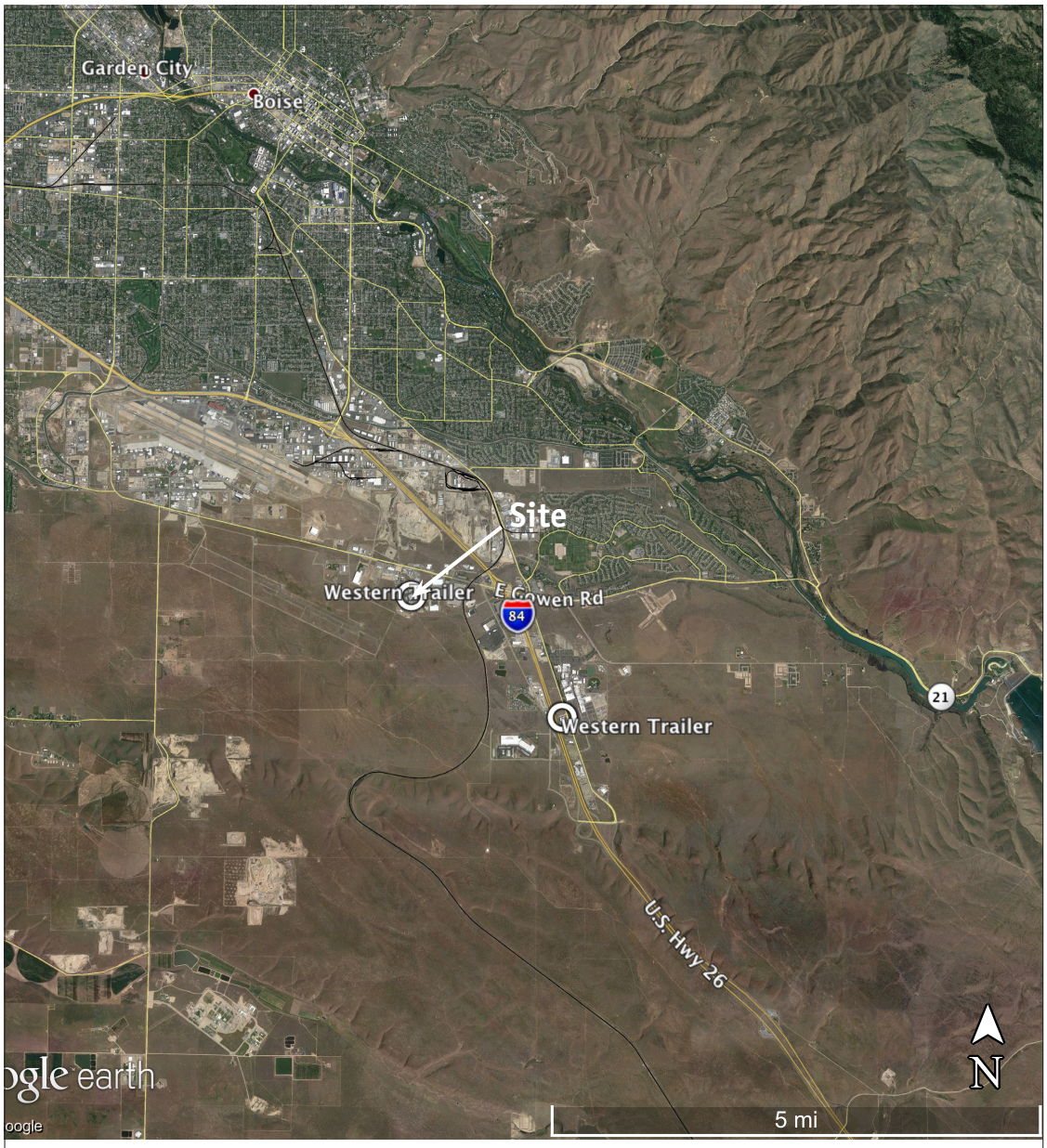

Map Source: Google Earth Pro, 2015.

Legend

N

Scale as Shown

TORF ENVIRONMENTAL MANAGEMENT

Figure 1 Vicinity Map

Western Trailer Co.
6701 Business Way
Boise, ID 83716

October 2015

TORF ENVIRONMENTAL MANAGEMENT

2. GENERAL INFORMATION –FORM GI DOCUMENTATION

Western Trailer operates a truck trailer manufacturing facility at 6701 Business Way, Boise, Idaho. Figure shows the general location of the facility. The purpose of the project is to permit an existing truck manufacturing operation.

Western Trailer operates another facility at 8623 S Federal Way, Boise, ID 83716, approximately 2 miles southeast of the Business Way location. Western Trailer is applying for a separate Permit to Construct for the S. Federal Way facility.

3. GENERAL EMISSION UNITS – FORM EU0 DOCUMENTATION

3.1 Combustion Units – Natural Gas Heaters

There are 9 heating units associated with this PTC application. Four of the heaters (including multiples of the same type) are indirect heating units using natural gas that qualify for exemption from permitting.[5] For the purposes of assessing BRC criteria and air dispersion modeling, the emissions of these units are described, included in the emission inventory, and included in the dispersion modeling.

3.1.1 Paint Building Make-up Air Heaters – MAU1 and MAU2

There are two direct-fired Reznor Model RDF2-120 natural gas make-up air heaters located at the Paint Building; one heater serves the Paint Drying Room (Paint Drying Bay Heater) and one heater serves the Wash Room (Paint Wash Bay Heater). The heaters each have a design input duty of 1,500,000 Btu per hour. Equipment specification sheets are provided in Appendix A.

The products of natural gas combustion are emitted into the room and then emitted via doors and vents. Emissions are estimated using AP-42[6] at the design capacities of 1.5 MMBtu per hour and at conservative seasonal use estimated to be 24-hours/day, 6 days/week, approximately 7.6 months of the air, 4380 hours per year. This an on-line rating of 50%.

Combustion gas emissions are provided Table 3-1 and Table 3-2 (below). For the purposes of conservatively estimating emissions at the Paint Building, combustion emissions are emitted into the large rooms and assumed to be discharged unchanged to outdoor air via side-wall fan vents and not from large overhead doors. The doors are operated intermittently and air dispersion modeling tests showed discharge from the large overhead doors exhibited impacts similar to the side-wall fan vents. In addition, the emissions of TAPs that exceed facility-wide Screening Emission Levels are included in facility-wide dispersion modeling and discussed in more detail in the Air Impact Modeling Analyses Report.

3.1.2 Paint Building Paint Booth Heater – MAU3

There are two direct-fired Viking natural gas heaters located at the Paint Building. The heaters each have a design input duty of 2,800,000 Btu per hour. Equipment specification sheets are provided in

[5] Idaho Department of Environmental Quality (IDEQ), Rules for the Control of Air Pollution in Idaho, Idaho Administrative Procedures Act IDAPA) 58 Title 01, Chapter 01, Section 222.02(c).

[6] U.S. Environmental Protection Agency, AP-42, Section 1.4 Natural Gas Combustion, July 1998.

Appendix A.

The products of natural gas combustion are emitted via 6 roof-top vents. Combustion gas emissions are provided Table 3-3 (below). Emissions are estimated using AP-42[7] at the design capacities of 2.8 MMBtu per hour and at conservative use estimated to be 24 hours per day, 6 days per week, 35 weeks per year, and at an on-line rating of 58% or 5040 hours per year. For the purposes of conservatively estimating emissions, combustion emissions are assumed to be emitted into the large paint booth room and discharged unchanged to outdoor air via 6 roof-top vents. In addition, the emissions of TAPs that exceed facility-wide Screening Emission Levels are included in facility-wide dispersion modeling and discussed in more detail in the Air Impact Modeling Analyses Report.

3.1.3 Building 1 Space Heater - Exempt – H1

There is one indirect-fired Reznor FT-30 natural gas heater located in Building 1. The heater has a design input duty of 30,000 Btu per hour. Equipment specification sheets are provided in Appendix A.

The products of natural gas combustion are emitted to outdoor air via a sidewall 4-inch diameter vent equipped with rain cap. Combustion gas emissions are provided Table 3-4 (below). Emissions are estimated using AP-42[8] at the design capacities of 0.03 MMBtu per hour and at conservative seasonal use estimated to be 24 hours per day, 6 days per week, 30.4 weeks per year, and at an on-line rating of 50% or 4380 hours per year. For the purposes of conservatively estimating emissions at Building 1, combustion emissions are assumed to be emitted into the large room and discharged unchanged to outdoor air via side-wall vents.

In accordance with Idaho Air Quality Regulations, since the unit is indirect-fired and is less than 50 million Btu per hour the unit is exempt from this PTC.[9] For the purposes of qualifying for BRC, the combustion emissions are included in the facility-wide criteria pollutant emissions summary, in Table 5-3 (below). In addition, the emissions of TAPs that exceed facility-wide Screening Emission Levels are included in facility-wide dispersion modeling and discussed in more detail in the Air Impact Modeling Analyses Report.

3.1.4 Building 1 Unit Heaters – H2

There are 50 direct-fired Re-Verber-Ray DR100 InfraRed natural gas heaters located in Building 1. The heaters each have a design input duty of 100,000 Btu per hour. Equipment specification sheets

[7] Ibid.
[8] AP-42, Section 1.4, July 1998.
[9] IDAPA 58.01.01.222.02.c.

are provided in Appendix A.

The products of natural gas combustion are emitted into the room and then emitted via doors and vents. Combustion gas emissions are provided Table 3-5 (below). Emissions are estimated using AP-42[10] at the design capacities of 0.1 MMBtu per hour and at conservative seasonal use estimated to be 24 hours per day 6 months of the year, an on-line rating of 50% or 4380 hours per year. For the purposes of conservatively estimating emissions at Building 1, combustion emissions are assumed to be emitted into the large room and discharged unchanged to outdoor air via side-wall vents.

For the purposes of qualifying for BRC, the combustion emissions are included in the facility-wide criteria pollutant emissions summary, in Table 5-3 (below). In addition, the emissions of TAPs that exceed facility-wide Screening Emission Levels are included in facility-wide dispersion modeling.

3.1.5 Building 1 Tool Room Furnace - Exempt – H3

There is one small indirect-fired Bryant natural gas furnace located in the tool room in Building 1. The heater has a design input duty of 46,000 Btu per hour.

The products of natural gas combustion are emitted to outdoor air via 5-inch diameter roof vent equipped with rain caps. Combustion gas emissions are provided Table 3-6 (below). Emissions are estimated using AP-42[11] at the design capacities of 0.046 MMBtu per hour and at conservative seasonal use estimated to be 24 hours per day 6 months of the year, an on-line rating of 50% or 4380 hours per year.

In accordance with Idaho Air Quality Regulations, since the unit is indirect-fired and is less than 50 million Btu per hour the unit is exempt from this PTC.[10] For the purposes of qualifying for BRC, the combustion emissions are included in the facility-wide criteria pollutant emissions summary, in Table 5-3 (below). In addition, the emissions of TAPs that exceed facility-wide Screening Emission Levels are included in facility-wide dispersion modeling.

3.1.6 Building 1 Office Furnaces - Exempt – H4

There are five small indirect-fired Bryant natural gas furnaces located in the upstairs and downstairs areas in Building 1. Four of the furnaces have a design input duty of 115,000 Btu per hour. One of the furnaces has a design input duty of 92,000 Btu per hour. For the purposes of estimating emissions, all of the furnaces are assumed to have an input rating of 115,000 Btu per hour.

---

[10] AP-42, Section 1.4, July 1998.
[11] AP-42, Section 1.4, July 1998.

The products of natural gas combustion are emitted to outdoor air via five 5-inch diameter roof vents equipped with rain caps. Combustion gas emissions are provided Table 3-7 (below). Emissions are estimated using AP-42[12] at the design capacity total of 0.575 MMBtu per hour and at conservative seasonal use estimated to be 24 hours per day 6 months of the year, an on-line rating of 50% or 4380 hours per year.

In accordance with Idaho Air Quality Regulations, since the unit are indirect-fired and are less than 50 million Btu per hour the units are exempt from this PTC.[10] For the purposes of qualifying for BRC, the combustion emissions are included in the facility-wide criteria pollutant emissions summary, in Table 5-3 (below). In addition, the emissions of TAPs that exceed facility-wide Screening Emission Levels are included in facility-wide dispersion modeling.

3.1.7 Building 8 Unit Heaters - Exempt – H5

There are 2 indirect-fired Reznor FE250-H natural gas heaters located in the main room at the Building 8. Each heater has a design input duty of 210,000 Btu per hour. Equipment specification sheets are provided in Appendix A.

The products of natural gas combustion are emitted Combustion emissions are emitted to outdoor air via two 5-inch diameter roof vents equipped with rain caps. Combustion gas emissions are provided Table 3-8 (below). Emissions are estimated using AP-42[13] at the design capacities of 0.1 MMBtu per hour and at conservative seasonal use estimated to be 24 hours per day 6 months of the year, an on-line rating of 50% or 4380 hours per year.

In accordance with Idaho Air Quality Regulations, since the unit are indirect-fired and are less than 50 million Btu per hour the units are exempt from this PTC.[10] For the purposes of qualifying for BRC, the combustion emissions are included in the facility-wide criteria pollutant emissions summary, in Table 5-3 (below). In addition, the emissions of TAPs that exceed facility-wide Screening Emission Levels are included in facility-wide dispersion modeling and discussed in more detail in the Air Impact Modeling Analyses Report.

3.1.8 Building 8 Training Room Furnace – Exempt – H6

There is one small indirect fired Trane natural gas furnace located in the Training Room in Building 8. The heater has a design input duty of 100,000 Btu per hour.

The products of natural gas combustion are emitted to outdoor air via 5-inch diameter roof vent equipped with rain caps. Combustion gas emissions are provided Table 3-9 (below). Emissions are

[12] AP-42, Section 1.4, July 1998.
[13] Ibid.

estimated using AP-42[14] at the design capacities of 0.10 MMBtu per hour and at conservative seasonal use estimated to be 24 hours per day 6 months of the year, an on-line rating of 50% or 4380 hours per year.

In accordance with Idaho Air Quality Regulations, since the unit is indirect-fired and is less than 50 million Btu per hour the unit is exempt from this PTC.[10] For the purposes of qualifying for BRC, the combustion emissions are included in the facility-wide criteria pollutant emissions summary, in Table 5-3 (below). In addition, the emissions of TAPs that exceed facility-wide Screening Emission Levels are included in facility-wide dispersion modeling.

3.1.9 Building 10 Welding Area Unit Heaters – H7

There are 8 direct-fired Re-Verber-Ray InfraRed natural gas heaters located in the welding room of Building 10. The heaters each have a design input duty of 100,000 Btu per hour. Equipment specification sheets are provided in Appendix A.

The products of natural gas combustion are emitted into the room and then emitted via doors and vents. Combustion gas emissions are provided Table 3-10 (below). Emissions are estimated using AP-42[15] at the design capacities of 0.1 MMBtu per hour hour and at conservative seasonal use estimated to be 24 hours per day 6 months of the year, an on-line rating of 50% or 4380 hours per year. For the purposes of conservatively estimating emissions at Building 10, combustion emissions are assumed to be emitted into the large room and discharged unchanged to outdoor air via a single side-wall vent. For the purposes of qualifying for BRC, the combustion emissions are included in the facility-wide criteria pollutant emissions summary, in Table 5-3 (below).

3.1.10 Building 10 Machine Shop Area Unit Heaters – Exempt – H8

There are 3 Modine PDP125AED130 indirect-fired natural gas heaters located in the Machine Shop area of Building 10. The heaters each have a design input duty of 125,000 Btu per hour. Equipment specification sheets are provided in Appendix A.

The products of natural gas combustion are emitted Combustion emissions are emitted to outdoor air via three 5-inch diameter sidewall vents equipped with rain caps. Combustion gas emissions are provided Table 3-11 (below). Emissions are estimated using AP-42[16] at the design capacities of 0.1 MMBtu per hour hour and at conservative seasonal use estimated to be 24 hours per day 6 months of the year, an on-line rating of 50% or 4380 hours per year. In accordance with Idaho Air Quality Regulations, since the unit are indirect-fired and are less than 50 million Btu per hour the units

[14] AP-42, Section 1.4, July 1998.
[15] AP-42, Section 1.4, July 1998.
[16] AP-42, Section 1.4, July 1998.

are exempt from this PTC.[10] For the purposes of qualifying for BRC, the combustion emissions are included in the facility-wide criteria pollutant emissions summary, in Table 5-3 (below).

3.1.11 Building 10 Office Furnaces - Exempt – H9

There are two small indirect-fired Bryant Plus 90 natural gas furnaces located in the upstairs and downstairs areas in Building 10. The furnaces have a design input duty of 60,000 Btu per hour.

The products of natural gas combustion are emitted to outdoor air via two 2-inch diameter sidewall vents equipped with rain caps. Combustion gas emissions are provided Table 3-12 (below). Emissions are estimated using AP-42[17] at the design capacity total of 0.12 MMBtu per hour and at conservative seasonal use estimated to be 24 hours per day 6 months of the year, an on-line rating of 50% or 4380 hours per year.

In accordance with Idaho Air Quality Regulations, since the unit are indirect-fired and are less than 50 million Btu per hour the units are exempt from this PTC.[10] For the purposes of qualifying for BRC, the combustion emissions are included in the facility-wide criteria pollutant emissions summary, in Table 5-3 (below). In addition, the emissions of TAPs that exceed facility-wide Screening Emission Levels are included in facility-wide dispersion modeling.

3.1.12 Blast Cleaning Building Unit Heaters – Exempt – H10

There are 2 indirect-fired Reznor Model UDAS-300 natural gas heaters located at the Blast Cleaning Building. The heaters have a design input duty of 300,000 Btu per hour. Equipment specification sheets are provided in Appendix A.

Combustion emissions are emitted to outdoor air via two 6-inch diameter roof vents equipped with rain caps. Combustion gas emissions are provided Table 3-13 (below). Emissions are estimated using AP-42[18] at the design capacities of 0.1 MMBtu per hour and at conservative seasonal use estimated to be 24 hours per day 6 months of the year, an on-line rating of 50% or 4380 hours per year.

In accordance with Idaho Air Quality Regulations, since the unit are indirect-fired and are less than 50 million Btu per hour the units are exempt from this PTC.[10] For the purposes of qualifying for BRC, the combustion emissions are included in the facility-wide criteria pollutant emissions summary, in Table 5-3 (below). In addition, the emissions of TAPs that exceed facility-wide Screening Emission Levels are included in facility-wide dispersion modeling and discussed in more detail in the Air Impact Modeling Analyses Report.

---

[17] AP-42, Section 1.4, July 1998.
[18] Ibid.

Western Trailer

Table 3-1: Paint Shop Drying Bay Heater Combustion Emissions

Source Name/Model	No. of units	Input Duty MBH	MMBtu/hr
Paint Shop Drying Bay Heater	1	1500	1.5 MMBtu/hr

Reznor Direct Fired Model: RDF2-120 May 1998

MakeUp Air Heater Duty = **1.5 MMBtu/hr ÷** 1,020 MMBtu/MMscf = **1.47E-03 MMscf/hr**

Fuel Use: 0.035 MMscf/day, 6.441 MMscf/year

Operating Assumptions: **24** hr/day, **4,380** hr/yr [3]

Criteria Air Pollutants	Emission Factor[1] lb/MMscf	Emissions lb/hr	Emissions T/yr
NO_x	100	0.15	0.32
CO	84	0.12	0.27
PM_{10}	7.6	0.011	0.02
$PM_{2.5}$	7.6	0.011	0.02
SO_2	0.6	8.8E-04	1.9E-03
VOC	5.5	8.1E-03	1.8E-02
Lead	0.0005	7.4E-07	1.6E-06
		5.3E-04	lb/month
Total Criteria Emissions (ton/yr) =			**0.64**

Greenhouse Gas Emissions	
CO_2 = 1 X 10^{-3} * MMBTU Gas * 53.06 kg CO_2/MMBTU	
CO_2 =	348 Metric Tons/year
CH_4 = 1 X 10^{-3} * MMBTU Gas * 0.001 kg CH_4/MMBTU	
CH_4 =	0.007 Metric Tons/year
N_2O = 1 X 10^{-3} * MMBTU Gas * 0.0001 kg N_2O/MMBTU	
N_2O =	0.001 Metric Tons/year
Total CO_2e = CO_2 + (CH_4 * 25) * (N_2O * 298)	
CO_2e =	**349 Metric Tons/year**

Hazardous & Toxic Air Pollutants (HAP & TAP)	Emission Factor[1] lb/MMscf	Emissions lb/hr[2]	Emissions T/yr	Modeling Threshold / TAP Screening Emission Level	Modeling Required?
PAH HAPs					
2-Methylnaphthalene	2.40E-05	**1.76E-08**	7.7E-08	9.1E-05 lb/hr	No
3-Methylchloranthrene	1.80E-06	**1.32E-09**	5.8E-09	2.5E-06 lb/hr	No
Acenaphthene	1.80E-06	**1.32E-09**	5.8E-09	9.1E-05 lb/hr	No
Acenaphthylene	1.80E-06	**1.32E-09**	5.8E-09	9.1E-05 lb/hr	No
Anthracene	2.40E-06	**1.76E-09**	7.7E-09	9.1E-05 lb/hr	No
Benzo(a)anthracene	1.80E-06	**1.32E-09**	5.8E-09		See POM
Benzo(a)pyrene	1.20E-06	**8.82E-10**	3.9E-09	2.0E-06 lb/hr	See POM
Benzo(b)fluoranthene	1.80E-06	**1.32E-09**	5.8E-09		See POM
Benzo(g,h,i)perylene	1.20E-06	**8.82E-10**	3.9E-09	9.1E-05 lb/hr	No
Benzo(k)fluoranthene	1.80E-06	**1.32E-09**	5.8E-09		See POM
Chrysene	1.80E-06	**1.32E-09**	5.8E-09		See POM
Dibenzo(a,h)anthracene	1.20E-06	**8.82E-10**	3.9E-09		See POM
Fluoranthene	3.00E-06	**2.21E-09**	9.7E-09	9.1E-05 lb/hr	No
Fluorene	2.80E-06	**2.06E-09**	9.0E-09	9.1E-05 lb/hr	No
Indeno(1,2,3-cd)pyrene	1.80E-06	**1.32E-09**	5.8E-09		See POM
Naphthalene	6.10E-04	8.97E-07	2.0E-06	3.33 lb/hr	No
Naphthalene	6.10E-04	**4.49E-07**	2.0E-06	9.1E-05 lb/hr	No
Phenanathrene	1.70E-05	**1.25E-08**	5.5E-08	9.1E-05 lb/hr	No
Pyrene	5.00E-06	**3.68E-09**	1.6E-08	9.1E-05 lb/hr	No
Polycyclic Org. Matter (POM, 7-PAH Group)		8.38E-09	3.7E-08	2.0E-06 lb/hr	No
Non-PAH HAPs					
Benzene	2.10E-03	**1.54E-06**	6.8E-06	8.0E-04 lb/hr	No
Dichlorobenzene	1.20E-03	1.76E-06	3.9E-06	20 lb/hr	No
Formaldehyde	7.50E-02	**5.51E-05**	2.4E-04	5.1E-04 lb/hr	No
Hexane	1.80E+00	2.65E-03	5.8E-03	12 lb/hr	No
Toluene	3.40E-03	5.00E-06	1.1E-05	25 lb/hr	No
Non-HAP Organic Compounds					
Pentane	2.60E+00	3.82E-03	8.4E-03	118 lb/hr	No
Metals (HAPs)					
Arsenic	2.00E-04	**1.47E-07**	6.4E-07	1.5E-06 lb/hr	No
Barium	4.40E-03	6.47E-06	1.4E-05	0.033 lb/hr	No
Beryllium	1.20E-05	**8.82E-09**	3.9E-08	2.8E-05 lb/hr	No
Cadmium	1.10E-03	**8.09E-07**	3.5E-06	3.7E-06 lb/hr	No
Chromium	1.40E-03	2.06E-06	4.5E-06	0.033 lb/hr	No
Cobalt	8.40E-05	1.24E-07	2.7E-07	0.0033 lb/hr	No
Copper	8.50E-04	1.25E-06	2.7E-06	0.013 lb/hr	No
Manganese	3.80E-04	5.59E-07	1.2E-06	0.067 lb/hr	No
Mercury	2.60E-04	3.82E-07	8.4E-07	0.003 lb/hr	No
Molybdenum	1.10E-03	1.62E-06	3.5E-06	0.333 lb/hr	No
Nickel	2.10E-03	**1.54E-06**	6.8E-06	2.7E-05 lb/hr	No
Selenium	2.40E-05	3.53E-08	7.7E-08	0.013 lb/hr	No
Vanadium	2.30E-03	3.38E-06	7.4E-06	0.003 lb/hr	No
Zinc	2.90E-02	4.26E-05	9.3E-05	0.667 lb/hr	No
Total HAP Emissions (ton/yr) =			0.006		

Notes:
1. Emission factors taken from AP-42, Section 1.4 *Natural Gas Combustion* (7/98)
2. TAPs lb/hr emissions are 24-hour averages unless shown in bold. Bold emissions are annual averages for carcinogens.
3. Air heater maximum estimated use 6 days/week; 24 hours/day; 30.4 weeks/year (7.6 months/year).

Western Trailer

Table 3-2: Paint Wash Bay Heater Combustion Emissions

Source Name/Model	No. of units	Input Duty MBH	MMBtu/hr
Paint Shop Wash Bay Heater	1	1500	1.5 MMBtu/hr
Reznor Direct Fired Model: RDF2-120 Dec. 2002		8760	

MakeUp Air Heater Duty =

1.5 MMBtu/hr ÷ 1,020 MMBtu/MMscf = **1.47E-03 MMscf/hr**

Operating Assumptions: **24** hr/day; **4,380** hr/yr [3]

Fuel Use: 0.035 MMscf/day; 6.441 MMscf/year

Criteria Air Pollutants	Emission Factor[1]	Emissions	
	lb/MMscf	lb/hr	T/yr
NO_x	100	0.15	0.32
CO	84	0.12	0.27
PM_{10}	7.6	0.011	0.02
$PM_{2.5}$	7.6	0.011	0.02
SO_2	0.6	8.8E-04	1.9E-03
VOC	5.5	8.1E-03	1.8E-02
Lead	0.0005	7.4E-07	1.6E-06
		5.3E-04	lb/month
Total Criteria Emissions (ton/yr) =			**0.64**

Greenhouse Gas Emissions	
CO_2 = 1 X 10^{-3} * MMBTU Gas * 53.06 kg CO_2/MMBTU	
CO_2 =	348 Metric Tons/year
CH_4 = 1 X 10^{-3} * MMBTU Gas * 0.001 kg CH_4/MMBTU	
CH_4 =	0.007 Metric Tons/year
N_2O = 1 X 10^{-3} * MMBTU Gas * 0.0001 kg N_2O/MMBTU	
N_2O =	0.001 Metric Tons/year
Total CO_2e = CO_2 + (CH_4 * 25) * (N_2O * 298)	
CO_2e =	**349 Metric Tons/year**

Hazardous & Toxic Air Pollutants (HAP & TAP)	Emission Factor[1]	Emissions		Modeling Threshold / TAP Screening Emission Level	Modeling Required?
	lb/MMscf	lb/hr[2]	T/yr		
PAH HAPs					
2-Methylnaphthalene	2.40E-05	**1.76E-08**	7.7E-08	9.1E-05 lb/hr	No
3-Methylchloranthrene	1.80E-06	**1.32E-09**	5.8E-09	2.5E-06 lb/hr	No
Acenaphthene	1.80E-06	**1.32E-09**	5.8E-09	9.1E-05 lb/hr	No
Acenaphthylene	1.80E-06	**1.32E-09**	5.8E-09	9.1E-05 lb/hr	No
Anthracene	2.40E-06	**1.76E-09**	7.7E-09	9.1E-05 lb/hr	No
Benzo(a)anthracene	1.80E-06	**1.32E-09**	5.8E-09		See POM
Benzo(a)pyrene	1.20E-06	**8.82E-10**	3.9E-09	2.0E-06 lb/hr	See POM
Benzo(b)fluoranthene	1.80E-06	**1.32E-09**	5.8E-09		See POM
Benzo(g,h,i)perylene	1.20E-06	**8.82E-10**	3.9E-09	9.1E-05 lb/hr	No
Benzo(k)fluoranthene	1.80E-06	**1.32E-09**	5.8E-09		See POM
Chrysene	1.80E-06	**1.32E-09**	5.8E-09		See POM
Dibenzo(a,h)anthracene	1.20E-06	**8.82E-10**	3.9E-09		See POM
Fluoranthene	3.00E-06	**2.21E-09**	9.7E-09	9.1E-05 lb/hr	No
Fluorene	2.80E-06	**2.06E-09**	9.0E-09	9.1E-05 lb/hr	No
Indeno(1,2,3-cd)pyrene	1.80E-06	**1.32E-09**	5.8E-09		See POM
Naphthalene	6.10E-04	8.97E-07	2.0E-06	3.33 lb/hr	No
Naphthalene	6.10E-04	**4.49E-07**	2.0E-06	9.1E-05 lb/hr	No
Phenanathrene	1.70E-05	**1.25E-08**	5.5E-08	9.1E-05 lb/hr	No
Pyrene	5.00E-06	**3.68E-09**	1.6E-08	9.1E-05 lb/hr	No
Polycyclic Org. Matter (POM, 7-PAH Group)		8.38E-09	3.7E-08	2.0E-06 lb/hr	No
Non-PAH HAPs					
Benzene	2.10E-03	**1.54E-06**	6.8E-06	8.0E-04 lb/hr	No
Dichlorobenzene	1.20E-03	1.76E-06	3.9E-06	20 lb/hr	No
Formaldehyde	7.50E-02	**5.51E-05**	2.4E-04	5.1E-04 lb/hr	No
Hexane	1.80E+00	2.65E-03	5.8E-03	12 lb/hr	No
Toluene	3.40E-03	5.00E-06	1.1E-05	25 lb/hr	No
Non-HAP Organic Compounds					
Pentane	2.60E+00	3.82E-03	8.4E-03	118 lb/hr	No
Metals (HAPs)					
Arsenic	2.00E-04	**1.47E-07**	6.4E-07	1.5E-06 lb/hr	No
Barium	4.40E-03	6.47E-06	1.4E-05	0.033 lb/hr	No
Beryllium	1.20E-05	**8.82E-09**	3.9E-08	2.8E-05 lb/hr	No
Cadmium	1.10E-03	**8.09E-07**	3.5E-06	3.7E-06 lb/hr	No
Chromium	1.40E-03	2.06E-06	4.5E-06	0.033 lb/hr	No
Cobalt	8.40E-05	1.24E-07	2.7E-07	0.0033 lb/hr	No
Copper	8.50E-04	1.25E-06	2.7E-06	0.013 lb/hr	No
Manganese	3.80E-04	5.59E-07	1.2E-06	0.067 lb/hr	No
Mercury	2.60E-04	3.82E-07	8.4E-07	0.003 lb/hr	No
Molybdenum	1.10E-03	1.62E-06	3.5E-06	0.333 lb/hr	No
Nickel	2.10E-03	**1.54E-06**	6.8E-06	2.7E-05 lb/hr	No
Selenium	2.40E-05	3.53E-08	7.7E-08	0.013 lb/hr	No
Vanadium	2.30E-03	3.38E-06	7.4E-06	0.003 lb/hr	No
Zinc	2.90E-02	4.26E-05	9.3E-05	0.667 lb/hr	No
Total HAP Emissions (ton/yr) =			0.006		

Notes:
1. Emission factors taken from AP-42, Section 1.4 *Natural Gas Combustion* (7/98)
2. TAPs lb/hr emissions are 24-hour averages unless shown in bold. Bold emissions are annual averages for carcinogens.
3. Air heater maximum estimated use 6 days/week; 24 hours/day; 30.4 weeks/year (7.6 months/year).

Western Trailer

Table 3-3: Paint Shop Paint Booth Heater Combustion Emissions

Source Name/Model	No. of units	Input Duty MMBtu/hr	MMBtu/hr
Paint Booth Heater	2	2.8	5.6 MMBtu/hr
Viking ANS Z83.4 (1995)			

MakeUp Air Heater Duty = **5.6 MMBtu/hr ÷** 1,020 MMBtu/MMscf = **5.49E-03 MMscf/hr**

Operating Assumptions: **20** hr/day; **5,040** hr/yr [3]

Fuel Use: 0.110 MMscf/day; 27.671 MMscf/year

Criteria Air Pollutants	Emission Factor[1] lb/MMscf	Emissions lb/hr	Emissions T/yr
NO_x	100	0.55	1.38
CO	84	0.46	1.16
PM_{10}	7.6	0.042	0.11
$PM_{2.5}$	7.6	0.042	0.11
SO_2	0.6	3.3E-03	8.3E-03
VOC	5.5	3.0E-02	7.6E-02
Lead	0.0005	2.7E-06	6.9E-06
		1.6E-03	lb/month
Total Criteria Emissions (ton/yr) =			**2.74**

Greenhouse Gas Emissions	
CO_2 = 1 X 10^{-3} * MMBTU Gas * 53.06 kg CO_2/MMBTU	
CO_2 =	1496 Metric Tons/year
CH_4 = 1 X 10^{-3} * MMBTU Gas * 0.001 kg CH_4/MMBTU	
CH_4 =	0.028 Metric Tons/year
N_2O = 1 X 10^{-3} * MMBTU Gas * 0.0001 kg N_2O/MMBTU	
N_2O =	0.003 Metric Tons/year
Total CO_2e = CO_2 + (CH_4 * 25) * (N_2O * 298)	
CO_2e =	**1497 Metric Tons/year**

Hazardous & Toxic Air Pollutants (HAP & TAP)	Emission Factor[1] lb/MMscf	Emissions lb/hr[2]	Emissions T/yr	Modeling Threshold / TAP Screening Emission Level	Modeling Required?
PAH HAPs					
2-Methylnaphthalene	2.40E-05	**7.58E-08**	3.3E-07	9.1E-05 lb/hr	No
3-Methylchloranthrene	1.80E-06	**5.69E-09**	2.5E-08	2.5E-06 lb/hr	No
Acenaphthene	1.80E-06	**5.69E-09**	2.5E-08	9.1E-05 lb/hr	No
Acenaphthylene	1.80E-06	**5.69E-09**	2.5E-08	9.1E-05 lb/hr	No
Anthracene	2.40E-06	**7.58E-09**	3.3E-08	9.1E-05 lb/hr	No
Benzo(a)anthracene	1.80E-06	**5.69E-09**	2.5E-08		See POM
Benzo(a)pyrene	1.20E-06	**3.79E-09**	1.7E-08	2.0E-06 lb/hr	See POM
Benzo(b)fluoranthene	1.80E-06	**5.69E-09**	2.5E-08		See POM
Benzo(g,h,i)perylene	1.20E-06	**3.79E-09**	1.7E-08	9.1E-05 lb/hr	No
Benzo(k)fluoranthene	1.80E-06	**5.69E-09**	2.5E-08		See POM
Chrysene	1.80E-06	**5.69E-09**	2.5E-08		See POM
Dibenzo(a,h)anthracene	1.20E-06	**3.79E-09**	1.7E-08		See POM
Fluoranthene	3.00E-06	**9.48E-09**	4.2E-08	9.1E-05 lb/hr	No
Fluorene	2.80E-06	**8.84E-09**	3.9E-08	9.1E-05 lb/hr	No
Indeno(1,2,3-cd)pyrene	1.80E-06	**5.69E-09**	2.5E-08		See POM
Naphthalene	6.10E-04	2.79E-06	8.4E-06	3.33 lb/hr	No
Naphthalene	6.10E-04	**1.93E-06**	8.4E-06	9.1E-05 lb/hr	No
Phenanathrene	1.70E-05	**5.37E-08**	2.4E-07	9.1E-05 lb/hr	No
Pyrene	5.00E-06	**1.58E-08**	6.9E-08	9.1E-05 lb/hr	No
Polycyclic Org. Matter (POM, 7-PAH Group)		3.60E-08	**1.6E-07**	2.0E-06 lb/hr	No
Non-PAH HAPs					
Benzene	2.10E-03	**6.63E-06**	2.9E-05	8.0E-04 lb/hr	No
Dichlorobenzene	1.20E-03	5.49E-06	1.7E-05	20 lb/hr	No
Formaldehyde	7.50E-02	**2.37E-04**	1.0E-03	5.1E-04 lb/hr	No
Hexane	1.80E+00	8.24E-03	2.5E-02	12 lb/hr	No
Toluene	3.40E-03	1.56E-05	4.7E-05	25 lb/hr	No
Non-HAP Organic Compounds					
Pentane	2.60E+00	1.19E-02	3.6E-02	118 lb/hr	No
Metals (HAPs)					
Arsenic	2.00E-04	**6.32E-07**	2.8E-06	1.5E-06 lb/hr	No
Barium	4.40E-03	2.01E-05	6.1E-05	0.033 lb/hr	No
Beryllium	1.20E-05	**3.79E-08**	1.7E-07	2.8E-05 lb/hr	No
Cadmium	1.10E-03	**3.47E-06**	1.5E-05	3.7E-06 lb/hr	No
Chromium	1.40E-03	6.41E-06	1.9E-05	0.033 lb/hr	No
Cobalt	8.40E-05	3.84E-07	1.2E-06	0.0033 lb/hr	No
Copper	8.50E-04	3.89E-06	1.2E-05	0.013 lb/hr	No
Manganese	3.80E-04	**1.74E-06**	5.3E-06	0.067 lb/hr	No
Mercury	2.60E-04	1.19E-06	3.6E-06	0.003 lb/hr	No
Molybdenum	1.10E-03	5.03E-06	1.5E-05	0.333 lb/hr	No
Nickel	2.10E-03	**6.63E-06**	2.9E-05	2.7E-05 lb/hr	No
Selenium	2.40E-05	1.10E-07	3.3E-07	0.013 lb/hr	No
Vanadium	2.30E-03	1.05E-05	3.2E-05	0.003 lb/hr	No
Zinc	2.90E-02	1.33E-04	4.0E-04	0.667 lb/hr	No
Total HAP Emissions (ton/yr) =			0.027		

Notes:
1. Emission factors taken from AP-42, Section 1.4 *Natural Gas Combustion* (7/98)
2. TAPs lb/hr emissions are 24-hour averages unless shown in bold. Bold emissions are annual averages for carcinogens.
3. Booth Air heater maximum estimated use 6 days/week; 24 hours/day; 35 weeks/year (8.75 months/year).

Table 3-4: Building 1 Space Heater - Exempt Combustion Emissions

Source Name/Model		Input Duty	
EXEMPT	**No. of units**	**MBH**	**MMBtu/hr**
Building 1 Space Heater	1	30	0.03 MMBtu/hr
Reznor Indirect Fired Model FT-30			

MakeUp Air Heater Duty =

0.03 MMBtu/hr ÷ 1,020 MMBtu/MMscf = **2.94E-05 MMscf/hr**

Operating Assumptions: **24** hr/day; **4,380** hr/yr [3]

Fuel Use: 0.001 MMscf/day; 0.129 MMscf/year

Criteria Air Pollutants	Emission Factor[1] lb/MMscf	Emissions lb/hr	Emissions T/yr
NO_x	100	0.003	0.01
CO	84	0.002	0.01
PM_{10}	7.6	0.0002	0.000
$PM_{2.5}$	7.6	0.0002	0.000
SO_2	0.6	1.8E-05	3.9E-05
VOC	5.5	1.6E-04	3.5E-04
Lead	0.0005	1.5E-08	3.2E-08
		1.1E-05 lb/month	
Total Criteria Emissions (ton/yr) =			**0.01**

Greenhouse Gas Emissions	
CO_2 = 1 X 10^{-3} * MMBTU Gas * 53.06 kg CO_2/MMBTU	
CO_2 =	7 Metric Tons/year
CH_4 = 1 X 10^{-3} * MMBTU Gas * 0.001 kg CH_4/MMBTU	
CH_4 =	0.000 Metric Tons/year
N_2O = 1 X 10^{-3} * MMBTU Gas * 0.0001 kg N_2O/MMBTU	
N_2O =	0.000 Metric Tons/year
Total CO_2e = CO_2 + (CH_4 * 25) * (N_2O * 298)	
CO_2e =	**7 Metric Tons/year**

Hazardous & Toxic Air Pollutants (HAP & TAP)	Emission Factor[1] lb/MMscf	Emissions lb/hr[2]	Emissions T/yr	Modeling Threshold TAP Screening	Modeling Required?
PAH HAPs					
2-Methylnaphthalene	2.40E-05	**3.53E-10**	1.5E-09	9.1E-05 lb/hr	No
3-Methylchloranthrene	1.80E-06	**2.65E-11**	1.2E-10	2.5E-06 lb/hr	No
Acenaphthene	1.80E-06	**2.65E-11**	1.2E-10	9.1E-05 lb/hr	No
Acenaphthylene	1.80E-06	**2.65E-11**	1.2E-10	9.1E-05 lb/hr	No
Anthracene	2.40E-06	**3.53E-11**	1.5E-10	9.1E-05 lb/hr	No
Benzo(a)anthracene	1.80E-06	**2.65E-11**	1.2E-10		See POM
Benzo(a)pyrene	1.20E-06	**1.76E-11**	7.7E-11	2.0E-06 lb/hr	See POM
Benzo(b)fluoranthene	1.80E-06	**2.65E-11**	1.2E-10		See POM
Benzo(g,h,i)perylene	1.20E-06	**1.76E-11**	7.7E-11	9.1E-05 lb/hr	No
Benzo(k)fluoranthene	1.80E-06	**2.65E-11**	1.2E-10		See POM
Chrysene	1.80E-06	**2.65E-11**	1.2E-10		See POM
Dibenzo(a,h)anthracene	1.20E-06	**1.76E-11**	7.7E-11		See POM
Fluoranthene	3.00E-06	**4.41E-11**	1.9E-10	9.1E-05 lb/hr	No
Fluorene	2.80E-06	**4.12E-11**	1.8E-10	9.1E-05 lb/hr	No
Indeno(1,2,3-cd)pyrene	1.80E-06	**2.65E-11**	1.2E-10		See POM
Naphthalene	6.10E-04	1.79E-08	3.9E-08	3.33 lb/hr	No
Naphthalene	6.10E-04	**8.97E-09**	3.9E-08	9.1E-05 lb/hr	No
Phenanathrene	1.70E-05	**2.50E-10**	1.1E-09	9.1E-05 lb/hr	No
Pyrene	5.00E-06	**7.35E-11**	3.2E-10	9.1E-05 lb/hr	No
Polycyclic Org. Matter (POM, 7-PAH Gr	1.68E-10	**7.3E-10**	2.0E-06 lb/hr		No
Non-PAH HAPs					
Benzene	2.10E-03	**3.09E-08**	1.4E-07	8.0E-04 lb/hr	No
Dichlorobenzene	1.20E-03	3.53E-08	7.7E-08	20 lb/hr	No
Formaldehyde	7.50E-02	**1.10E-06**	4.8E-06	5.1E-04 lb/hr	No
Hexane	1.80E+00	5.29E-05	1.2E-04	12 lb/hr	No
Toluene	3.40E-03	1.00E-07	2.2E-07	25 lb/hr	No
Non-HAP Organic Compounds					
7,12-Dimethylbenz(a)antl	1.60E-05	4.71E-10	1.0E-09		
Butane	2.10E+00	6.18E-05	1.4E-04		
Ethane	3.10E+00	9.12E-05	2.0E-04		
Pentane	2.60E+00	7.65E-05	1.7E-04	118 lb/hr	No
Propane	1.60E+00	4.71E-05	1.0E-04		
Metals (HAPs)					
Arsenic	2.00E-04	**2.94E-09**	1.3E-08	1.5E-06 lb/hr	No
Barium	4.40E-03	1.29E-07	2.8E-07	0.033 lb/hr	No
Beryllium	1.20E-05	**1.76E-10**	7.7E-10	2.8E-05 lb/hr	No
Cadmium	1.10E-03	**1.62E-08**	7.1E-08	3.7E-06 lb/hr	No
Chromium	1.40E-03	4.12E-08	9.0E-08	0.033 lb/hr	No
Cobalt	8.40E-05	2.47E-09	5.4E-09	0.0033 lb/hr	No
Copper	8.50E-04	2.50E-08	5.5E-08	0.013 lb/hr	No
Manganese	3.80E-04	**1.12E-08**	2.4E-08	0.067 lb/hr	No
Mercury	2.60E-04	7.65E-09	1.7E-08	0.003 lb/hr	No
Molybdenum	1.10E-03	3.24E-08	7.1E-08	0.333 lb/hr	No
Nickel	2.10E-03	**3.09E-08**	1.4E-07	2.7E-05 lb/hr	No
Selenium	2.40E-05	7.06E-10	1.5E-09	0.013 lb/hr	No
Vanadium	2.30E-03	6.76E-08	1.5E-07	0.003 lb/hr	No
Zinc	2.90E-02	8.53E-07	1.9E-06	0.667 lb/hr	No
Total HAP Emissions (ton/yr) =			0.000		

Notes:
1. Emission factors taken from AP-42, Section 1.4 *Natural Gas Combustion* (7/98)
2. TAPs lb/hr emissions are 24-hour averages unless shown in bold. Bold emissions are annual averages for carcinogens.
3. Air heater maximum estimated use 6 days/week; 24 hours/day; 30.4 weeks/year (7.6 months/year).

Table 3-5: Building 1 Unit Heaters - Exempt Combustion Emissions

Source Name/Model		Input Duty		
EXEMPT	**No. of units**	**MBH**	**Unit MMBtu/hr**	**Total MMBtu/hr**
Building 1 Infra Red Heaters	50	100	0.1 MMBtu/hr	5 MMBtu/hr

Re-Verber-Ray DR100 Direct-fired Infra-Red Radiant Heater

MakeUp Air Heater Duty =

5 MMBtu/hr ÷ 1,020 MMBtu/MMscf = **4.90E-03 MMscf/hr** **Fuel Use:**

Operating Assumptions: **24** hr/day 0.118 MMscf/day

4,380 hr/yr [3] 21.471 MMscf/year

Criteria Air Pollutants	Emission Factor[1]	Emissions	
	lb/MMscf	lb/hr	T/yr
NO_x	100	0.49	1.07
CO	84	0.41	0.90
PM_{10}	7.6	0.037	0.082
$PM_{2.5}$	7.6	0.037	0.082
SO_2	0.6	2.9E-03	6.4E-03
VOC	5.5	2.7E-02	5.9E-02
Lead	0.0005	2.5E-06	5.4E-06
		1.8E-03 lb/month	
Total Criteria Emissions (ton/yr) =			**2.12**

Greenhouse Gas Emissions	
CO_2 = 1 X 10^{-3} * MMBTU Gas * 53.06 kg CO_2/MMBTU	
CO_2 =	1161 Metric Tons/year
CH_4 = 1 X 10^{-3} * MMBTU Gas * 0.001 kg CH_4/MMBTU	
CH_4 =	0.022 Metric Tons/year
N_2O = 1 X 10^{-3} * MMBTU Gas * 0.0001 kg N_2O/MMBTU	
N_2O =	0.002 Metric Tons/year
Total CO_2e = CO_2 + (CH_4 * 25) * (N_2O * 298)	
CO_2e =	**1162 Metric Tons/year**

Hazardous & Toxic Air Pollutants (HAP & TAP)	Emission Factor[1]	Emissions		Modeling Threshold	Modeling Required?
	lb/MMscf	lb/hr[2]	T/yr	TAP Screening	
PAH HAPs					
2-Methylnaphthalene	2.40E-05	**5.88E-08**	2.6E-07	9.1E-05 lb/hr	No
3-Methylchloranthrene	1.80E-06	**4.41E-09**	1.9E-08	2.5E-06 lb/hr	No
Acenaphthene	1.80E-06	**4.41E-09**	1.9E-08	9.1E-05 lb/hr	No
Acenaphthylene	1.80E-06	**4.41E-09**	1.9E-08	9.1E-05 lb/hr	No
Anthracene	2.40E-06	**5.88E-09**	2.6E-08	9.1E-05 lb/hr	No
Benzo(a)anthracene	1.80E-06	**4.41E-09**	1.9E-08		See POM
Benzo(a)pyrene	1.20E-06	**2.94E-09**	1.3E-08	2.0E-06 lb/hr	See POM
Benzo(b)fluoranthene	1.80E-06	**4.41E-09**	1.9E-08		See POM
Benzo(g,h,i)perylene	1.20E-06	**2.94E-09**	1.3E-08	9.1E-05 lb/hr	No
Benzo(k)fluoranthene	1.80E-06	**4.41E-09**	1.9E-08		See POM
Chrysene	1.80E-06	**4.41E-09**	1.9E-08		See POM
Dibenzo(a,h)anthracene	1.20E-06	**2.94E-09**	1.3E-08		See POM
Fluoranthene	3.00E-06	**7.35E-09**	3.2E-08	9.1E-05 lb/hr	No
Fluorene	2.80E-06	**6.86E-09**	3.0E-08	9.1E-05 lb/hr	No
Indeno(1,2,3-cd)pyrene	1.80E-06	**4.41E-09**	1.9E-08		See POM
Naphthalene	6.10E-04	2.99E-06	6.5E-06	3.33 lb/hr	No
Naphthalene	6.10E-04	**1.50E-06**	6.5E-06	9.1E-05 lb/hr	No
Phenanathrene	1.70E-05	**4.17E-08**	1.8E-07	9.1E-05 lb/hr	No
Pyrene	5.00E-06	**1.23E-08**	5.4E-08	9.1E-05 lb/hr	No
Polycyclic Org. Matter (POM, 7-PAH Group		2.79E-08	**1.2E-07**	2.0E-06 lb/hr	No
Non-PAH HAPs					
Benzene	2.10E-03	**5.15E-06**	2.3E-05	8.0E-04 lb/hr	No
Dichlorobenzene	1.20E-03	5.88E-06	1.3E-05	20 lb/hr	No
Formaldehyde	7.50E-02	**1.84E-04**	8.1E-04	5.1E-04 lb/hr	No
Hexane	1.80E+00	8.82E-03	1.9E-02	12 lb/hr	No
Toluene	3.40E-03	1.67E-05	3.7E-05	25 lb/hr	No
Non-HAP Organic Compounds					
7,12-Dimethylbenz(a)anthrac	1.60E-05	7.84E-08	1.7E-07		
Butane	2.10E+00	1.03E-02	2.3E-02		
Ethane	3.10E+00	1.52E-02	3.3E-02		
Pentane	2.60E+00	1.27E-02	2.8E-02	118 lb/hr	No
Propane	1.60E+00	7.84E-03	1.7E-02		
Metals (HAPs)					
Arsenic	2.00E-04	**4.90E-07**	2.1E-06	1.5E-06 lb/hr	No
Barium	4.40E-03	2.16E-05	4.7E-05	0.033 lb/hr	No
Beryllium	1.20E-05	**2.94E-08**	1.3E-07	2.8E-05 lb/hr	No
Cadmium	1.10E-03	**2.70E-06**	1.2E-05	3.7E-06 lb/hr	No
Chromium	1.40E-03	6.86E-06	1.5E-05	0.033 lb/hr	No
Cobalt	8.40E-05	4.12E-07	9.0E-07	0.0033 lb/hr	No
Copper	8.50E-04	4.17E-06	9.1E-06	0.013 lb/hr	No
Manganese	3.80E-04	**1.86E-06**	4.1E-06	0.067 lb/hr	No
Mercury	2.60E-04	1.27E-06	2.8E-06	0.003 lb/hr	No
Molybdenum	1.10E-03	5.39E-06	1.2E-05	0.333 lb/hr	No
Nickel	2.10E-03	**5.15E-06**	2.3E-05	2.7E-05 lb/hr	No
Selenium	2.40E-05	1.18E-07	2.6E-07	0.013 lb/hr	No
Vanadium	2.30E-03	1.13E-05	2.5E-05	0.003 lb/hr	No
Zinc	2.90E-02	1.42E-04	3.1E-04	0.667 lb/hr	No
Total HAP Emissions (ton/yr) =			0.021		

Notes:
1. Emission factors taken from AP-42, Section 1.4 *Natural Gas Combustion* (7/98)
2. TAPs lb/hr emissions are 24-hour averages unless shown in bold. Bold emissions are annual averages for carcinogens.
3. Air heater maximum estimated use 6 days/week; 24 hours/day; 30.4 weeks/year (7.6 months/year).

Table 3-6: Building 1 Tool Room Furnace Combustion Emissions

Source Name/Model		Input Duty		
EXEMPT	**No. of units**	**MBH**	**Unit MMBtu/hr**	**Total MMBtu/hr**
Building 1 Tool Room Furnace	1	46	0.046 MMBtu/hr	0.046 MMBtu/hr
Bryant				

MakeUp Air Heater Duty =

0.046 MMBtu/hr ÷ 1,020 MMBtu/MMscf = **4.51E-05 MMscf/hr**

Fuel Use:
0.001 MMscf/day
0.198 MMscf/year

Operating Assumptions:
24 hr/day
4,380 hr/yr [3]

Criteria Air Pollutants	Emission Factor[1] lb/MMscf	Emissions lb/hr	Emissions T/yr
NO_x	100	0.005	0.01
CO	84	0.004	0.01
PM_{10}	7.6	0.0003	0.001
$PM_{2.5}$	7.6	0.0003	0.001
SO_2	0.6	2.7E-05	5.9E-05
VOC	5.5	2.5E-04	5.4E-04
Lead	0.0005	2.3E-08	4.9E-08
		1.6E-05	lb/month
Total Criteria Emissions (ton/yr) =			**0.02**

Greenhouse Gas Emissions	
CO_2 = 1 X 10^{-3} * MMBTU Gas * 53.06 kg CO_2/MMBTU	
CO_2 =	11 Metric Tons/year
CH_4 = 1 X 10^{-3} * MMBTU Gas * 0.001 kg CH_4/MMBTU	
CH_4 =	0.000 Metric Tons/year
N_2O = 1 X 10^{-3} * MMBTU Gas * 0.0001 kg N_2O/MMBTU	
N_2O =	0.000 Metric Tons/year
Total CO_2e = CO_2 + (CH_4 * 25) * (N_2O * 298)	
CO_2e =	**11 Metric Tons/year**

Hazardous & Toxic Air Pollutants (HAP & TAP)	Emission Factor[1] lb/MMscf	Emissions lb/hr[2]	Emissions T/yr	Modeling Threshold TAP Screening	Modeling Required?
PAH HAPs					
2-Methylnaphthalene	2.40E-05	**5.41E-10**	2.4E-09	9.1E-05 lb/hr	No
3-Methylchloranthrene	1.80E-06	**4.06E-11**	1.8E-10	2.5E-06 lb/hr	No
Acenaphthene	1.80E-06	**4.06E-11**	1.8E-10	9.1E-05 lb/hr	No
Acenaphthylene	1.80E-06	**4.06E-11**	1.8E-10	9.1E-05 lb/hr	No
Anthracene	2.40E-06	**5.41E-11**	2.4E-10	9.1E-05 lb/hr	No
Benzo(a)anthracene	1.80E-06	**4.06E-11**	1.8E-10		See POM
Benzo(a)pyrene	1.20E-06	**2.71E-11**	1.2E-10	2.0E-06 lb/hr	See POM
Benzo(b)fluoranthene	1.80E-06	**4.06E-11**	1.8E-10		See POM
Benzo(g,h,i)perylene	1.20E-06	**2.71E-11**	1.2E-10	9.1E-05 lb/hr	No
Benzo(k)fluoranthene	1.80E-06	**4.06E-11**	1.8E-10		See POM
Chrysene	1.80E-06	**4.06E-11**	1.8E-10		See POM
Dibenzo(a,h)anthracene	1.20E-06	**2.71E-11**	1.2E-10		See POM
Fluoranthene	3.00E-06	**6.76E-11**	3.0E-10	9.1E-05 lb/hr	No
Fluorene	2.80E-06	**6.31E-11**	2.8E-10	9.1E-05 lb/hr	No
Indeno(1,2,3-cd)pyrene	1.80E-06	**4.06E-11**	1.8E-10		See POM
Naphthalene	6.10E-04	2.75E-08	6.0E-08	3.33 lb/hr	No
Naphthalene	6.10E-04	**1.38E-08**	6.0E-08	9.1E-05 lb/hr	No
Phenanathrene	1.70E-05	**3.83E-10**	1.7E-09	9.1E-05 lb/hr	No
Pyrene	5.00E-06	**1.13E-10**	4.9E-10	9.1E-05 lb/hr	No
Polycyclic Org. Matter (POM, 7-PAH Group)		2.57E-10	**1.1E-09**	2.0E-06 lb/hr	No
Non-PAH HAPs					
Benzene	2.10E-03	**4.74E-08**	2.1E-07	8.0E-04 lb/hr	No
Dichlorobenzene	1.20E-03	5.41E-08	1.2E-07	20 lb/hr	No
Formaldehyde	7.50E-02	**1.69E-06**	7.4E-06	5.1E-04 lb/hr	No
Hexane	1.80E+00	8.12E-05	1.8E-04	12 lb/hr	No
Toluene	3.40E-03	1.53E-07	3.4E-07	25 lb/hr	No
Non-HAP Organic Compounds					
7,12-Dimethylbenz(a)anthracen	1.60E-05	7.22E-10	1.6E-09		
Butane	2.10E+00	9.47E-05	2.1E-04		
Ethane	3.10E+00	1.40E-04	3.1E-04		
Pentane	2.60E+00	1.17E-04	2.6E-04	118 lb/hr	No
Propane	1.60E+00	7.22E-05	1.6E-04		
Metals (HAPs)					
Arsenic	2.00E-04	**4.51E-09**	2.0E-08	1.5E-06 lb/hr	No
Barium	4.40E-03	1.98E-07	4.3E-07	0.033 lb/hr	No
Beryllium	1.20E-05	**2.71E-10**	1.2E-09	2.8E-05 lb/hr	No
Cadmium	1.10E-03	**2.48E-08**	1.1E-07	3.7E-06 lb/hr	No
Chromium	1.40E-03	6.31E-08	1.4E-07	0.033 lb/hr	No
Cobalt	8.40E-05	3.79E-09	8.3E-09	0.0033 lb/hr	No
Copper	8.50E-04	3.83E-08	8.4E-08	0.013 lb/hr	No
Manganese	3.80E-04	**1.71E-08**	3.8E-08	0.067 lb/hr	No
Mercury	2.60E-04	1.17E-08	2.6E-08	0.003 lb/hr	No
Molybdenum	1.10E-03	4.96E-08	1.1E-07	0.333 lb/hr	No
Nickel	2.10E-03	**4.74E-08**	2.1E-07	2.7E-05 lb/hr	No
Selenium	2.40E-05	1.08E-09	2.4E-09	0.013 lb/hr	No
Vanadium	2.30E-03	1.04E-07	2.3E-07	0.003 lb/hr	No
Zinc	2.90E-02	1.31E-06	2.9E-06	0.667 lb/hr	No
Total HAP Emissions (ton/yr) =			0.000		

Notes:
1. Emission factors taken from AP-42, Section 1.4 *Natural Gas Combustion* (7/98)
2. TAPs lb/hr emissions are 24-hour averages unless shown in bold. Bold emissions are annual averages for carcinogens.
3. Air heater maximum estimated use 6 days/week; 24 hours/day; 30.4 weeks/year (7.6 months/year).

Table 3-7: Building 1 Office Furnaces Combustion Emissions

Source Name/Model		Input Duty		
EXEMPT	**No. of units**	**MBH**	**Unit MMBtu/hr**	**Total MMBtu/hr**
Building 1 Office Furnaces	5	115	0.115 MMBtu/hr	0.575 MMBtu/hr
Bryant				

MakeUp Air Heater Duty =
0.575 MMBtu/hr ÷ 1,020 MMBtu/MMscf = **5.64E-04 MMscf/hr**

Fuel Use:
0.014 MMscf/day
2.469 MMscf/year

Operating Assumptions:
24 hr/day
4,380 hr/yr [3]

Criteria Air Pollutants	Emission Factor[1] lb/MMscf	Emissions lb/hr	Emissions T/yr
NO_x	100	0.06	0.12
CO	84	0.05	0.10
PM_{10}	7.6	0.004	0.009
$PM_{2.5}$	7.6	0.004	0.009
SO_2	0.6	3.4E-04	7.4E-04
VOC	5.5	3.1E-03	6.8E-03
Lead	0.0005	2.8E-07	6.2E-07
		2.0E-04 lb/month	
Total Criteria Emissions (ton/yr) =			**0.24**

Greenhouse Gas Emissions	
CO_2 = 1 X 10^{-3} * MMBTU Gas * 53.06 kg CO_2/MMBTU	
CO_2 =	133 Metric Tons/year
CH_4 = 1 X 10^{-3} * MMBTU Gas * 0.001 kg CH_4/MMBTU	
CH_4 =	0.003 Metric Tons/year
N_2O = 1 X 10^{-3} * MMBTU Gas * 0.0001 kg N_2O/MMBTU	
N_2O =	0.000 Metric Tons/year
Total CO_2e = CO_2 + (CH_4 * 25) * (N_2O * 298)	
CO_2e =	**134 Metric Tons/year**

Hazardous & Toxic Air Pollutants (HAP & TAP)	Emission Factor[1] lb/MMscf	Emissions lb/hr[2]	Emissions T/yr	Modeling Threshold TAP Screening	Modeling Required?
PAH HAPs					
2-Methylnaphthalene	2.40E-05	**6.76E-09**	3.0E-08	9.1E-05 lb/hr	No
3-Methylchloranthrene	1.80E-06	**5.07E-10**	2.2E-09	2.5E-06 lb/hr	No
Acenaphthene	1.80E-06	**5.07E-10**	2.2E-09	9.1E-05 lb/hr	No
Acenaphthylene	1.80E-06	**5.07E-10**	2.2E-09	9.1E-05 lb/hr	No
Anthracene	2.40E-06	**6.76E-10**	3.0E-09	9.1E-05 lb/hr	No
Benzo(a)anthracene	1.80E-06	**5.07E-10**	2.2E-09		See POM
Benzo(a)pyrene	1.20E-06	**3.38E-10**	1.5E-09	2.0E-06 lb/hr	See POM
Benzo(b)fluoranthene	1.80E-06	**5.07E-10**	2.2E-09		See POM
Benzo(g,h,i)perylene	1.20E-06	**3.38E-10**	1.5E-09	9.1E-05 lb/hr	No
Benzo(k)fluoranthene	1.80E-06	**5.07E-10**	2.2E-09		See POM
Chrysene	1.80E-06	**5.07E-10**	2.2E-09		See POM
Dibenzo(a,h)anthracene	1.20E-06	**3.38E-10**	1.5E-09		See POM
Fluoranthene	3.00E-06	**8.46E-10**	3.7E-09	9.1E-05 lb/hr	No
Fluorene	2.80E-06	**7.89E-10**	3.5E-09	9.1E-05 lb/hr	No
Indeno(1,2,3-cd)pyrene	1.80E-06	**5.07E-10**	2.2E-09		See POM
Naphthalene	6.10E-04	3.44E-07	7.5E-07	3.33 lb/hr	No
Naphthalene	6.10E-04	**1.72E-07**	7.5E-07	9.1E-05 lb/hr	No
Phenanathrene	1.70E-05	**4.79E-09**	2.1E-08	9.1E-05 lb/hr	No
Pyrene	5.00E-06	**1.41E-09**	6.2E-09	9.1E-05 lb/hr	No
Polycyclic Org. Matter (POM, 7-PAH Group)	3.21E-09	**1.4E-08**	2.0E-06 lb/hr		No
Non-PAH HAPs					
Benzene	2.10E-03	**5.92E-07**	2.6E-06	8.0E-04 lb/hr	No
Dichlorobenzene	1.20E-03	6.76E-07	1.5E-06	20 lb/hr	No
Formaldehyde	7.50E-02	**2.11E-05**	9.3E-05	5.1E-04 lb/hr	No
Hexane	1.80E+00	1.01E-03	2.2E-03	12 lb/hr	No
Toluene	3.40E-03	1.92E-06	4.2E-06	25 lb/hr	No
Non-HAP Organic Compounds					
7,12-Dimethylbenz(a)anthracen	1.60E-05	9.02E-09	2.0E-08		
Butane	2.10E+00	1.18E-03	2.6E-03		
Ethane	3.10E+00	1.75E-03	3.8E-03		
Pentane	2.60E+00	1.47E-03	3.2E-03	118 lb/hr	No
Propane	1.60E+00	9.02E-04	2.0E-03		
Metals (HAPs)					
Arsenic	2.00E-04	**5.64E-08**	2.5E-07	1.5E-06 lb/hr	No
Barium	4.40E-03	2.48E-06	5.4E-06	0.033 lb/hr	No
Beryllium	1.20E-05	**3.38E-09**	1.5E-08	2.8E-05 lb/hr	No
Cadmium	1.10E-03	**3.10E-07**	1.4E-06	3.7E-06 lb/hr	No
Chromium	1.40E-03	7.89E-07	1.7E-06	0.033 lb/hr	No
Cobalt	8.40E-05	4.74E-08	1.0E-07	0.0033 lb/hr	No
Copper	8.50E-04	4.79E-07	1.0E-06	0.013 lb/hr	No
Manganese	3.80E-04	**2.14E-07**	4.7E-07	0.067 lb/hr	No
Mercury	2.60E-04	1.47E-07	3.2E-07	0.003 lb/hr	No
Molybdenum	1.10E-03	6.20E-07	1.4E-06	0.333 lb/hr	No
Nickel	2.10E-03	**5.92E-07**	2.6E-06	2.7E-05 lb/hr	No
Selenium	2.40E-05	1.35E-08	3.0E-08	0.013 lb/hr	No
Vanadium	2.30E-03	1.30E-06	2.8E-06	0.003 lb/hr	No
Zinc	2.90E-02	1.63E-05	3.6E-05	0.667 lb/hr	No
Total HAP Emissions (ton/yr) =			0.002		

Notes:
1. Emission factors taken from AP-42, Section 1.4 *Natural Gas Combustion* (7/98)
2. TAPs lb/hr emissions are 24-hour averages unless shown in bold. Bold emissions are annual averages for carcinogens.
3. Air heater maximum estimated use 6 days/week; 24 hours/day; 30.4 weeks/year (7.6 months/year).

Table 3-8: Building 8 Unit Heaters - Exempt Combustion Emissions

Source Name/Model	No. of units	Input Duty BTU/hr	MMBtu/hr	
Building 8 Unit Heaters	2	210,000	0.42	MMBtu/hr
Reznor FE250-H Direct-fired				

MakeUp Air Heater Duty =

0.42 MMBtu/hr ÷ 1,020 MMBtu/MMscf = **4.12E-04 MMscf/hr**

Operating Assumptions: **24** hr/day
4,380 hr/yr [3]

Fuel Use:
0.010 MMscf/day
1.804 MMscf/year

Criteria Air Pollutants	Emission Factor[1] lb/MMscf	Emissions lb/hr	Emissions T/yr
NO_x	100	0.04	0.09
CO	84	0.03	0.08
PM_{10}	7.6	0.003	0.007
$PM_{2.5}$	7.6	0.003	0.007
SO_2	0.6	2.5E-04	5.4E-04
VOC	5.5	2.3E-03	5.0E-03
Lead	0.0005	2.1E-07	4.5E-07
		1.5E-04 lb/month	
Total Criteria Emissions (ton/yr) =			**0.18**

Greenhouse Gas Emissions	
CO_2 = 1 X 10^{-3} * MMBTU Gas * 53.06 kg CO_2/MMBTU	
CO_2 =	97 Metric Tons/year
CH_4 = 1 X 10^{-3} * MMBTU Gas * 0.001 kg CH_4/MMBTU	
CH_4 =	0.002 Metric Tons/year
N_2O = 1 X 10^{-3} * MMBTU Gas * 0.0001 kg N_2O/MMBTU	
N_2O =	0.000 Metric Tons/year
Total CO_2e = CO_2 + (CH_4 * 25) * (N_2O * 298)	
CO_2e =	**98 Metric Tons/year**

Hazardous & Toxic Air Pollutants (HAP & TAP)	Emission Factor[1] lb/MMscf	Emissions lb/hr[2]	Emissions T/yr	Modeling Threshold TAP Screening	Modeling Required?
PAH HAPs					
2-Methylnaphthalene	2.40E-05	**4.94E-09**	2.2E-08	9.1E-05 lb/hr	No
3-Methylchloranthrene	1.80E-06	**3.71E-10**	1.6E-09	2.5E-06 lb/hr	No
Acenaphthene	1.80E-06	**3.71E-10**	1.6E-09	9.1E-05 lb/hr	No
Acenaphthylene	1.80E-06	**3.71E-10**	1.6E-09	9.1E-05 lb/hr	No
Anthracene	2.40E-06	**4.94E-10**	2.2E-09	9.1E-05 lb/hr	No
Benzo(a)anthracene	1.80E-06	**3.71E-10**	1.6E-09		See POM
Benzo(a)pyrene	1.20E-06	**2.47E-10**	1.1E-09	2.0E-06 lb/hr	See POM
Benzo(b)fluoranthene	1.80E-06	**3.71E-10**	1.6E-09		See POM
Benzo(g,h,i)perylene	1.20E-06	**2.47E-10**	1.1E-09	9.1E-05 lb/hr	No
Benzo(k)fluoranthene	1.80E-06	**3.71E-10**	1.6E-09		See POM
Chrysene	1.80E-06	**3.71E-10**	1.6E-09		See POM
Dibenzo(a,h)anthracene	1.20E-06	**2.47E-10**	1.1E-09		See POM
Fluoranthene	3.00E-06	**6.18E-10**	2.7E-09	9.1E-05 lb/hr	No
Fluorene	2.80E-06	**5.76E-10**	2.5E-09	9.1E-05 lb/hr	No
Indeno(1,2,3-cd)pyrene	1.80E-06	**3.71E-10**	1.6E-09		See POM
Naphthalene	6.10E-04	2.51E-07	5.5E-07	3.33 lb/hr	No
Naphthalene	6.10E-04	**1.26E-07**	5.5E-07	9.1E-05 lb/hr	No
Phenanathrene	1.70E-05	**3.50E-09**	1.5E-08	9.1E-05 lb/hr	No
Pyrene	5.00E-06	**1.03E-09**	4.5E-09	9.1E-05 lb/hr	No
Polycyclic Org. Matter (POM, 7-PAH G	2.35E-09	**1.0E-08**		2.0E-06 lb/hr	No
Non-PAH HAPs					
Benzene	2.10E-03	**4.32E-07**	1.9E-06	8.0E-04 lb/hr	No
Dichlorobenzene	1.20E-03	4.94E-07	1.1E-06	20 lb/hr	No
Formaldehyde	7.50E-02	**1.54E-05**	6.8E-05	5.1E-04 lb/hr	No
Hexane	1.80E+00	7.41E-04	1.6E-03	12 lb/hr	No
Toluene	3.40E-03	1.40E-06	3.1E-06	25 lb/hr	No
Non-HAP Organic Compounds					
7,12-Dimethylbenz(a)an	1.60E-05	6.59E-09	1.4E-08		
Butane	2.10E+00	8.65E-04	1.9E-03		
Ethane	3.10E+00	1.28E-03	2.8E-03		
Pentane	2.60E+00	1.07E-03	2.3E-03	118 lb/hr	No
Propane	1.60E+00	6.59E-04	1.4E-03		
Metals (HAPs)					
Arsenic	2.00E-04	**4.12E-08**	1.8E-07	1.5E-06 lb/hr	No
Barium	4.40E-03	1.81E-06	4.0E-06	0.033 lb/hr	No
Beryllium	1.20E-05	**2.47E-09**	1.1E-08	2.8E-05 lb/hr	No
Cadmium	1.10E-03	**2.26E-07**	9.9E-07	3.7E-06 lb/hr	No
Chromium	1.40E-03	5.76E-07	1.3E-06	0.033 lb/hr	No
Cobalt	8.40E-05	3.46E-08	7.6E-08	0.0033 lb/hr	No
Copper	8.50E-04	3.50E-07	7.7E-07	0.013 lb/hr	No
Manganese	3.80E-04	1.56E-07	3.4E-07	0.067 lb/hr	No
Mercury	2.60E-04	1.07E-07	2.3E-07	0.003 lb/hr	No
Molybdenum	1.10E-03	4.53E-07	9.9E-07	0.333 lb/hr	No
Nickel	2.10E-03	**4.32E-07**	1.9E-06	2.7E-05 lb/hr	No
Selenium	2.40E-05	9.88E-09	2.2E-08	0.013 lb/hr	No
Vanadium	2.30E-03	9.47E-07	2.1E-06	0.003 lb/hr	No
Zinc	2.90E-02	1.19E-05	2.6E-05	0.667 lb/hr	No
Total HAP Emissions (ton/yr) =			0.002		

Notes:
1. Emission factors taken from AP-42, Section 1.4 *Natural Gas Combustion* (7/98)
2. TAPs lb/hr emissions are 24-hour averages unless shown in bold. Bold emissions are annual averages for carcinogens.
3. Air heater maximum estimated use 6 days/week; 24 hours/day; 30.4 weeks/year (7.6 months/year).

Table 3-9: Building 8 Training Room Furnace Combustion Emissions

Source Name/Model	No. of units	Input Duty BTU/hr	Unit MMBtu/hr	Total MMBtu/hr	
Building 8 Training Room Fur	1	100,000	0.10 MMBtu/hr	0.1 MMBtu/hr	**Fuel Use:**
Trane TUE100A948K2					0.002 MMscf/day
MakeUp Air Heater Duty =					0.429 MMscf/year
0.1 MMBtu/hr ÷		1,020 MMBtu/MMscf	= **9.80E-05 MMscf/hr**		**Fuel Use:**
Operating Assumptions:		**24** hr/day			0.002 MMscf/day
		4,380 hr/yr [3]			0.429 MMscf/year

Criteria Air Pollutants	Emission Factor[1] lb/MMscf	Emissions lb/hr	Emissions T/yr
NO_x	100	0.01	0.02
CO	84	0.01	0.02
PM_{10}	7.6	0.001	0.002
$PM_{2.5}$	7.6	0.001	0.002
SO_2	0.6	5.9E-05	1.3E-04
VOC	5.5	5.4E-04	1.2E-03
Lead	0.0005	4.9E-08	1.1E-07
		3.5E-05	lb/month
Total Criteria Emissions (ton/yr) =			**0.04**

Greenhouse Gas Emissions	
$CO_2 = 1 \times 10^{-3}$ * MMBTU Gas * 53.06 kg CO_2/MMBTU	
CO_2 =	23 Metric Tons/year
$CH_4 = 1 \times 10^{-3}$ * MMBTU Gas * 0.001 kg CH_4/MMBTU	
CH_4 =	0.000 Metric Tons/year
$N_2O = 1 \times 10^{-3}$ * MMBTU Gas * 0.0001 kg N_2O/MMBTU	
N_2O =	0.000 Metric Tons/year
Total $CO_2e = CO_2 + (CH_4 * 25) * (N_2O * 298)$	
CO_2e =	**23 Metric Tons/year**

Hazardous & Toxic Air Pollutants (HAP & TAP)	Emission Factor[1] lb/MMscf	Emissions lb/hr[2]	Emissions T/yr	Modeling Threshold TAP Screening	Modeling Required?
PAH HAPs					
2-Methylnaphthalene	2.40E-05	**1.18E-09**	5.2E-09	9.1E-05 lb/hr	No
3-Methylchloranthrene	1.80E-06	**8.82E-11**	3.9E-10	2.5E-06 lb/hr	No
Acenaphthene	1.80E-06	**8.82E-11**	3.9E-10	9.1E-05 lb/hr	No
Acenaphthylene	1.80E-06	**8.82E-11**	3.9E-10	9.1E-05 lb/hr	No
Anthracene	2.40E-06	**1.18E-10**	5.2E-10	9.1E-05 lb/hr	No
Benzo(a)anthracene	1.80E-06	**8.82E-11**	3.9E-10		See POM
Benzo(a)pyrene	1.20E-06	**5.88E-11**	2.6E-10	2.0E-06 lb/hr	See POM
Benzo(b)fluoranthene	1.80E-06	**8.82E-11**	3.9E-10		See POM
Benzo(g,h,i)perylene	1.20E-06	**5.88E-11**	2.6E-10	9.1E-05 lb/hr	No
Benzo(k)fluoranthene	1.80E-06	**8.82E-11**	3.9E-10		See POM
Chrysene	1.80E-06	**8.82E-11**	3.9E-10		See POM
Dibenzo(a,h)anthracene	1.20E-06	**5.88E-11**	2.6E-10		See POM
Fluoranthene	3.00E-06	**1.47E-10**	6.4E-10	9.1E-05 lb/hr	No
Fluorene	2.80E-06	**1.37E-10**	6.0E-10	9.1E-05 lb/hr	No
Indeno(1,2,3-cd)pyrene	1.80E-06	**8.82E-11**	3.9E-10		See POM
Naphthalene	6.10E-04	5.98E-08	1.3E-07	3.33 lb/hr	No
Naphthalene	6.10E-04	**2.99E-08**	1.3E-07	9.1E-05 lb/hr	No
Phenanathrene	1.70E-05	**8.33E-10**	3.7E-09	9.1E-05 lb/hr	No
Pyrene	5.00E-06	**2.45E-10**	1.1E-09	9.1E-05 lb/hr	No
Polycyclic Org. Matter (POM, 7-PAH Group		5.59E-10	**2.4E-09**	2.0E-06 lb/hr	No
Non-PAH HAPs					
Benzene	2.10E-03	**1.03E-07**	4.5E-07	8.0E-04 lb/hr	No
Dichlorobenzene	1.20E-03	1.18E-07	2.6E-07	20 lb/hr	No
Formaldehyde	7.50E-02	**3.68E-06**	1.6E-05	5.1E-04 lb/hr	No
Hexane	1.80E+00	1.76E-04	3.9E-04	12 lb/hr	No
Toluene	3.40E-03	3.33E-07	7.3E-07	25 lb/hr	No
Non-HAP Organic Compounds					
7,12-Dimethylbenz(a)anthrac	1.60E-05	1.57E-09	3.4E-09		
Butane	2.10E+00	2.06E-04	4.5E-04		
Ethane	3.10E+00	3.04E-04	6.7E-04		
Pentane	2.60E+00	2.55E-04	5.6E-04	118 lb/hr	No
Propane	1.60E+00	1.57E-04	3.4E-04		
Metals (HAPs)					
Arsenic	2.00E-04	**9.80E-09**	4.3E-08	1.5E-06 lb/hr	No
Barium	4.40E-03	4.31E-07	9.4E-07	0.033 lb/hr	No
Beryllium	1.20E-05	**5.88E-10**	2.6E-09	2.8E-05 lb/hr	No
Cadmium	1.10E-03	**5.39E-08**	2.4E-07	3.7E-06 lb/hr	No
Chromium	1.40E-03	1.37E-07	3.0E-07	0.033 lb/hr	No
Cobalt	8.40E-05	8.24E-09	1.8E-08	0.0033 lb/hr	No
Copper	8.50E-04	8.33E-08	1.8E-07	0.013 lb/hr	No
Manganese	3.80E-04	3.73E-08	8.2E-08	0.067 lb/hr	No
Mercury	2.60E-04	2.55E-08	5.6E-08	0.003 lb/hr	No
Molybdenum	1.10E-03	1.08E-07	2.4E-07	0.333 lb/hr	No
Nickel	2.10E-03	**1.03E-07**	4.5E-07	2.7E-05 lb/hr	No
Selenium	2.40E-05	2.35E-09	5.2E-09	0.013 lb/hr	No
Vanadium	2.30E-03	2.25E-07	4.9E-07	0.003 lb/hr	No
Zinc	2.90E-02	2.84E-06	6.2E-06	0.667 lb/hr	No
Total HAP Emissions (ton/yr) =			0.000		

Notes:
1. Emission factors taken from AP-42, Section 1.4 *Natural Gas Combustion* (7/98)
2. TAPs lb/hr emissions are 24-hour averages unless shown in bold. Bold emissions are annual averages for carcinogens.
3. Air heater maximum estimated use 6 days/week; 24 hours/day; 30.4 weeks/year (7.6 months/year).

Table 3-10: Building 10 Welding Area Unit Heaters - Exempt Combustion Emissions

Source Name/Model	No. of units	Input Duty MBH	Unit MMBtu/hr	Total MMBtu/hr	
Building 10 Infra Red Unit Heaters	8	100	0.1 MMBtu/hr	0.8 MMBtu/hr	**Fuel Use:**
Re-Verber-Ray Infra-Red Radiant Heater					0.002 MMscf/day
MakeUp Air Heater Duty =					0.429 MMscf/year
	0.1 MMBtu/hr ÷	1,020 MMBtu/MMscf	= **9.80E-05 MMscf/hr**		**Fuel Use:**
Operating Assumptions:		**24** hr/day			0.002 MMscf/day
		4,380 hr/yr [3]			0.429 MMscf/year

Criteria Air Pollutants	Emission Factor[1] lb/MMscf	Emissions lb/hr	Emissions T/yr
NO_x	100	0.01	0.02
CO	84	0.01	0.02
PM_{10}	7.6	0.001	0.002
$PM_{2.5}$	7.6	0.001	0.002
SO_2	0.6	5.9E-05	1.3E-04
VOC	5.5	5.4E-04	1.2E-03
Lead	0.0005	4.9E-08	1.1E-07
		3.5E-05 lb/month	
Total Criteria Emissions (ton/yr) =			**0.04**

Greenhouse Gas Emissions
CO_2 = 1 X 10^{-3} * MMBTU Gas * 53.06 kg CO_2/MMBTU
CO_2 = 23 Metric Tons/year
CH_4 = 1 X 10^{-3} * MMBTU Gas * 0.001 kg CH_4/MMBTU
CH_4 = 0.000 Metric Tons/year
N_2O = 1 X 10^{-3} * MMBTU Gas * 0.0001 kg N_2O/MMBTU
N_2O = 0.000 Metric Tons/year
Total CO_2e = CO_2 + (CH_4 * 25) * (N_2O * 298)
CO_2e = 23 Metric Tons/year

Hazardous & Toxic Air Pollutants (HAP & TAP)	Emission Factor[1] lb/MMscf	Emissions lb/hr[2]	Emissions T/yr	Modeling Threshold TAP Screening	Modeling Required?
PAH HAPs					
2-Methylnaphthalene	2.40E-05	**1.18E-09**	5.2E-09	9.1E-05 lb/hr	No
3-Methylchloranthrene	1.80E-06	**8.82E-11**	3.9E-10	2.5E-06 lb/hr	No
Acenaphthene	1.80E-06	**8.82E-11**	3.9E-10	9.1E-05 lb/hr	No
Acenaphthylene	1.80E-06	**8.82E-11**	3.9E-10	9.1E-05 lb/hr	No
Anthracene	2.40E-06	**1.18E-10**	5.2E-10	9.1E-05 lb/hr	No
Benzo(a)anthracene	1.80E-06	**8.82E-11**	3.9E-10		See POM
Benzo(a)pyrene	1.20E-06	**5.88E-11**	2.6E-10	2.0E-06 lb/hr	See POM
Benzo(b)fluoranthene	1.80E-06	**8.82E-11**	3.9E-10		See POM
Benzo(g,h,i)perylene	1.20E-06	**5.88E-11**	2.6E-10	9.1E-05 lb/hr	No
Benzo(k)fluoranthene	1.80E-06	**8.82E-11**	3.9E-10		See POM
Chrysene	1.80E-06	**8.82E-11**	3.9E-10		See POM
Dibenzo(a,h)anthracene	1.20E-06	**5.88E-11**	2.6E-10		See POM
Fluoranthene	3.00E-06	**1.47E-10**	6.4E-10	9.1E-05 lb/hr	No
Fluorene	2.80E-06	**1.37E-10**	6.0E-10	9.1E-05 lb/hr	No
Indeno(1,2,3-cd)pyrene	1.80E-06	**8.82E-11**	3.9E-10		See POM
Naphthalene	6.10E-04	5.98E-08	1.3E-07	3.33 lb/hr	No
Naphthalene	6.10E-04	**2.99E-08**	1.3E-07	9.1E-05 lb/hr	No
Phenanathrene	1.70E-05	**8.33E-10**	3.7E-09	9.1E-05 lb/hr	No
Pyrene	5.00E-06	**2.45E-10**	1.1E-09	9.1E-05 lb/hr	No
Polycyclic Org. Matter (POM, 7-PAH Group)		5.59E-10	**2.4E-09**	2.0E-06 lb/hr	No
Non-PAH HAPs					
Benzene	2.10E-03	**1.03E-07**	4.5E-07	8.0E-04 lb/hr	No
Dichlorobenzene	1.20E-03	1.18E-07	2.6E-07	20 lb/hr	No
Formaldehyde	7.50E-02	**3.68E-06**	1.6E-05	5.1E-04 lb/hr	No
Hexane	1.80E+00	1.76E-04	3.9E-04	12 lb/hr	No
Toluene	3.40E-03	3.33E-07	7.3E-07	25 lb/hr	No
Non-HAP Organic Compounds					
7,12-Dimethylbenz(a)anthracene	1.60E-05	1.57E-09	3.4E-09		
Butane	2.10E+00	2.06E-04	4.5E-04		
Ethane	3.10E+00	3.04E-04	6.7E-04		
Pentane	2.60E+00	2.55E-04	5.6E-04	118 lb/hr	No
Propane	1.60E+00	1.57E-04	3.4E-04		
Metals (HAPs)					
Arsenic	2.00E-04	**9.80E-09**	4.3E-08	1.5E-06 lb/hr	No
Barium	4.40E-03	4.31E-07	9.4E-07	0.033 lb/hr	No
Beryllium	1.20E-05	**5.88E-10**	2.6E-09	2.8E-05 lb/hr	No
Cadmium	1.10E-03	**5.39E-08**	2.4E-07	3.7E-06 lb/hr	No
Chromium	1.40E-03	1.37E-07	3.0E-07	0.033 lb/hr	No
Cobalt	8.40E-05	8.24E-09	1.8E-08	0.0033 lb/hr	No
Copper	8.50E-04	8.33E-08	1.8E-07	0.013 lb/hr	No
Manganese	3.80E-04	3.73E-08	8.2E-08	0.067 lb/hr	No
Mercury	2.60E-04	2.55E-08	5.6E-08	0.003 lb/hr	No
Molybdenum	1.10E-03	1.08E-07	2.4E-07	0.333 lb/hr	No
Nickel	2.10E-03	**1.03E-07**	4.5E-07	2.7E-05 lb/hr	No
Selenium	2.40E-05	2.35E-09	5.2E-09	0.013 lb/hr	No
Vanadium	2.30E-03	2.25E-07	4.9E-07	0.003 lb/hr	No
Zinc	2.90E-02	2.84E-06	6.2E-06	0.667 lb/hr	No
Total HAP Emissions (ton/yr) =			0.000		

Notes:
1. Emission factors taken from AP-42, Section 1.4 *Natural Gas Combustion* (7/98)
2. TAPs lb/hr emissions are 24-hour averages unless shown in bold. Bold emissions are annual averages for carcinogens.
3. Air heater maximum estimated use 6 days/week; 24 hours/day; 30.4 weeks/year (7.6 months/year).

Table 3-11: Building 10 Machine Shop Area Unit Heaters - Exempt Combustion Emissions

Source Name/Model	No. of units	Input Duty BTU/hr	Unit MMBtu/hr	Total MMBtu/hr	
Building 10 Machine Shop Unit Heaters Modine PDP125AED130	3	125,000	0.125 MMBtu/hr	0.375 MMBtu/hr	**Fuel Use:** 0.003 MMscf/day 0.537 MMscf/year

MakeUp Air Heater Duty =
0.125 MMBtu/hr ÷ 1,020 MMBtu/MMscf = **1.23E-04 MMscf/hr**

Fuel Use: 0.003 MMscf/day 0.537 MMscf/year

Operating Assumptions: **24** hr/day
4,380 hr/yr [3]

Criteria Air Pollutants	Emission Factor[1] lb/MMscf	Emissions lb/hr	Emissions T/yr
NO_x	100	0.01	0.03
CO	84	0.01	0.02
PM_{10}	7.6	0.001	0.002
$PM_{2.5}$	7.6	0.001	0.002
SO_2	0.6	7.4E-05	1.6E-04
VOC	5.5	6.7E-04	1.5E-03
Lead	0.0005	6.1E-08	1.3E-07
		4.4E-05	lb/month
Total Criteria Emissions (ton/yr) =			**0.05**

Greenhouse Gas Emissions
CO_2 = 1 X 10^{-3} * MMBTU Gas * 53.06 kg CO_2/MMBTU
CO_2 = 29 Metric Tons/year
CH_4 = 1 X 10^{-3} * MMBTU Gas * 0.001 kg CH_4/MMBTU
CH_4 = 0.001 Metric Tons/year
N_2O = 1 X 10^{-3} * MMBTU Gas * 0.0001 kg N_2O/MMBTU
N_2O = 0.000 Metric Tons/year
Total CO_2e = CO_2 + (CH_4 * 25) * (N_2O * 298)
CO_2e = 29 Metric Tons/year

Hazardous & Toxic Air Pollutants (HAP & TAP)	Emission Factor[1] lb/MMscf	Emissions lb/hr[2]	Emissions T/yr	Modeling Threshold TAP Screening	Modeling Required?
PAH HAPs					
2-Methylnaphthalene	2.40E-05	**1.47E-09**	6.4E-09	9.1E-05 lb/hr	No
3-Methylchloranthrene	1.80E-06	**1.10E-10**	4.8E-10	2.5E-06 lb/hr	No
Acenaphthene	1.80E-06	**1.10E-10**	4.8E-10	9.1E-05 lb/hr	No
Acenaphthylene	1.80E-06	**1.10E-10**	4.8E-10	9.1E-05 lb/hr	No
Anthracene	2.40E-06	**1.47E-10**	6.4E-10	9.1E-05 lb/hr	No
Benzo(a)anthracene	1.80E-06	**1.10E-10**	4.8E-10		See POM
Benzo(a)pyrene	1.20E-06	**7.35E-11**	3.2E-10	2.0E-06 lb/hr	See POM
Benzo(b)fluoranthene	1.80E-06	**1.10E-10**	4.8E-10		See POM
Benzo(g,h,i)perylene	1.20E-06	**7.35E-11**	3.2E-10	9.1E-05 lb/hr	No
Benzo(k)fluoranthene	1.80E-06	**1.10E-10**	4.8E-10		See POM
Chrysene	1.80E-06	**1.10E-10**	4.8E-10		See POM
Dibenzo(a,h)anthracene	1.20E-06	**7.35E-11**	3.2E-10		See POM
Fluoranthene	3.00E-06	**1.84E-10**	8.1E-10	9.1E-05 lb/hr	No
Fluorene	2.80E-06	**1.72E-10**	7.5E-10	9.1E-05 lb/hr	No
Indeno(1,2,3-cd)pyrene	1.80E-06	**1.10E-10**	4.8E-10		See POM
Naphthalene	6.10E-04	7.48E-08	1.6E-07	3.33 lb/hr	No
Naphthalene	6.10E-04	**3.74E-08**	1.6E-07	9.1E-05 lb/hr	No
Phenanathrene	1.70E-05	**1.04E-09**	4.6E-09	9.1E-05 lb/hr	No
Pyrene	5.00E-06	**3.06E-10**	1.3E-09	9.1E-05 lb/hr	No
Polycyclic Org. Matter (POM, 7-PAH C	6.99E-10	**3.1E-09**		2.0E-06 lb/hr	No
Non-PAH HAPs					
Benzene	2.10E-03	**1.29E-07**	5.6E-07	8.0E-04 lb/hr	No
Dichlorobenzene	1.20E-03	1.47E-07	3.2E-07	20 lb/hr	No
Formaldehyde	7.50E-02	**4.60E-06**	2.0E-05	5.1E-04 lb/hr	No
Hexane	1.80E+00	2.21E-04	4.8E-04	12 lb/hr	No
Toluene	3.40E-03	4.17E-07	9.1E-07	25 lb/hr	No
Non-HAP Organic Compounds					
7,12-Dimethylbenz(a)ar	1.60E-05	1.96E-09	4.3E-09		
Butane	2.10E+00	2.57E-04	5.6E-04		
Ethane	3.10E+00	3.80E-04	8.3E-04		
Pentane	2.60E+00	3.19E-04	7.0E-04	118 lb/hr	No
Propane	1.60E+00	1.96E-04	4.3E-04		
Metals (HAPs)					
Arsenic	2.00E-04	**1.23E-08**	5.4E-08	1.5E-06 lb/hr	No
Barium	4.40E-03	5.39E-07	1.2E-06	0.033 lb/hr	No
Beryllium	1.20E-05	**7.35E-10**	3.2E-09	2.8E-05 lb/hr	No
Cadmium	1.10E-03	**6.74E-08**	3.0E-07	3.7E-06 lb/hr	No
Chromium	1.40E-03	1.72E-07	3.8E-07	0.033 lb/hr	No
Cobalt	8.40E-05	1.03E-08	2.3E-08	0.0033 lb/hr	No
Copper	8.50E-04	1.04E-07	2.3E-07	0.013 lb/hr	No
Manganese	3.80E-04	4.66E-08	1.0E-07	0.067 lb/hr	No
Mercury	2.60E-04	3.19E-08	7.0E-08	0.003 lb/hr	No
Molybdenum	1.10E-03	1.35E-07	3.0E-07	0.333 lb/hr	No
Nickel	2.10E-03	**1.29E-07**	5.6E-07	2.7E-05 lb/hr	No
Selenium	2.40E-05	2.94E-09	6.4E-09	0.013 lb/hr	No
Vanadium	2.30E-03	2.82E-07	6.2E-07	0.003 lb/hr	No
Zinc	2.90E-02	3.55E-06	7.8E-06	0.667 lb/hr	No
Total HAP Emissions (ton/yr) =			0.001		

Notes:
1. Emission factors taken from AP-42, Section 1.4 *Natural Gas Combustion* (7/98)
2. TAPs lb/hr emissions are 24-hour averages unless shown in bold. Bold emissions are annual averages for carcinogens.
3. Air heater maximum estimated use 6 days/week; 24 hours/day; 30.4 weeks/year (7.6 months/year).

Table 3-12: Building 10 Office Furnaces Combustion Emissions

Source Name/Model	No. of units	BTU/hr	Input Duty Unit MMBtu/hr	Total MMBtu/hr		Fuel Use:
Building 10 Office Furnaces	2	60,000	0.06 MMBtu/hr	0.12 MMBtu/hr		
Bryant 90 Plus						0.001 MMscf/day
MakeUp Air Heater Duty =						0.258 MMscf/year
0.06 MMBtu/hr ÷		1,020 MMBtu/MMscf =		**5.88E-05 MMscf/hr**		**Fuel Use:**
Operating Assumptions:		**24** hr/day				0.001 MMscf/day
		4,380 hr/yr [3]				0.258 MMscf/year

Criteria Air Pollutants	Emission Factor[1] lb/MMscf	Emissions lb/hr	Emissions T/yr
NO_x	100	0.01	0.01
CO	84	0.00	0.01
PM_{10}	7.6	0.000	0.001
$PM_{2.5}$	7.6	0.000	0.001
SO_2	0.6	3.5E-05	7.7E-05
VOC	5.5	3.2E-04	7.1E-04
Lead	0.0005	2.9E-08	6.4E-08
		2.1E-05 lb/month	
Total Criteria Emissions (ton/yr) =			**0.03**

Greenhouse Gas Emissions
CO_2 = 1 X 10^{-3} * MMBTU Gas * 53.06 kg CO_2/MMBTU
CO_2 = 14 Metric Tons/year
CH_4 = 1 X 10^{-3} * MMBTU Gas * 0.001 kg CH_4/MMBTU
CH_4 = 0.000 Metric Tons/year
N_2O = 1 X 10^{-3} * MMBTU Gas * 0.0001 kg N_2O/MMBTU
N_2O = 0.000 Metric Tons/year
Total CO_2e = CO_2 + (CH_4 * 25) * (N_2O * 298)
CO_2e = 14 Metric Tons/year

Hazardous & Toxic Air Pollutants (HAP & TAP)	Emission Factor[1] lb/MMscf	Emissions lb/hr[2]	Emissions T/yr	Modeling Threshold TAP Screening	Modeling Required?
PAH HAPs					
2-Methylnaphthalene	2.40E-05	**7.06E-10**	3.1E-09	9.1E-05 lb/hr	No
3-Methylchloranthrene	1.80E-06	**5.29E-11**	2.3E-10	2.5E-06 lb/hr	No
Acenaphthene	1.80E-06	**5.29E-11**	2.3E-10	9.1E-05 lb/hr	No
Acenaphthylene	1.80E-06	**5.29E-11**	2.3E-10	9.1E-05 lb/hr	No
Anthracene	2.40E-06	**7.06E-11**	3.1E-10	9.1E-05 lb/hr	No
Benzo(a)anthracene	1.80E-06	**5.29E-11**	2.3E-10		See POM
Benzo(a)pyrene	1.20E-06	**3.53E-11**	1.5E-10	2.0E-06 lb/hr	See POM
Benzo(b)fluoranthene	1.80E-06	**5.29E-11**	2.3E-10		See POM
Benzo(g,h,i)perylene	1.20E-06	**3.53E-11**	1.5E-10	9.1E-05 lb/hr	No
Benzo(k)fluoranthene	1.80E-06	**5.29E-11**	2.3E-10		See POM
Chrysene	1.80E-06	**5.29E-11**	2.3E-10		See POM
Dibenzo(a,h)anthracene	1.20E-06	**3.53E-11**	1.5E-10		See POM
Fluoranthene	3.00E-06	**8.82E-11**	3.9E-10	9.1E-05 lb/hr	No
Fluorene	2.80E-06	**8.24E-11**	3.6E-10	9.1E-05 lb/hr	No
Indeno(1,2,3-cd)pyrene	1.80E-06	**5.29E-11**	2.3E-10		See POM
Naphthalene	6.10E-04	3.59E-08	7.9E-08	3.33 lb/hr	No
Naphthalene	6.10E-04	**1.79E-08**	7.9E-08	9.1E-05 lb/hr	No
Phenanathrene	1.70E-05	**5.00E-10**	2.2E-09	9.1E-05 lb/hr	No
Pyrene	5.00E-06	**1.47E-10**	6.4E-10	9.1E-05 lb/hr	No
Polycyclic Org. Matter (POM, 7-PAH Grou		3.35E-10	**1.5E-09**	2.0E-06 lb/hr	No
Non-PAH HAPs					
Benzene	2.10E-03	**6.18E-08**	2.7E-07	8.0E-04 lb/hr	No
Dichlorobenzene	1.20E-03	7.06E-08	1.5E-07	20 lb/hr	No
Formaldehyde	7.50E-02	**2.21E-06**	9.7E-06	5.1E-04 lb/hr	No
Hexane	1.80E+00	1.06E-04	2.3E-04	12 lb/hr	No
Toluene	3.40E-03	2.00E-07	4.4E-07	25 lb/hr	No
Non-HAP Organic Compounds					
7,12-Dimethylbenz(a)anthra	1.60E-05	9.41E-10	2.1E-09		
Butane	2.10E+00	1.24E-04	2.7E-04		
Ethane	3.10E+00	1.82E-04	4.0E-04		
Pentane	2.60E+00	1.53E-04	3.3E-04	118 lb/hr	No
Propane	1.60E+00	9.41E-05	2.1E-04		
Metals (HAPs)					
Arsenic	2.00E-04	**5.88E-09**	2.6E-08	1.5E-06 lb/hr	No
Barium	4.40E-03	2.59E-07	5.7E-07	0.033 lb/hr	No
Beryllium	1.20E-05	**3.53E-10**	1.5E-09	2.8E-05 lb/hr	No
Cadmium	1.10E-03	**3.24E-08**	1.4E-07	3.7E-06 lb/hr	No
Chromium	1.40E-03	8.24E-08	1.8E-07	0.033 lb/hr	No
Cobalt	8.40E-05	4.94E-09	1.1E-08	0.0033 lb/hr	No
Copper	8.50E-04	5.00E-08	1.1E-07	0.013 lb/hr	No
Manganese	3.80E-04	2.24E-08	4.9E-08	0.067 lb/hr	No
Mercury	2.60E-04	1.53E-08	3.3E-08	0.003 lb/hr	No
Molybdenum	1.10E-03	6.47E-08	1.4E-07	0.333 lb/hr	No
Nickel	2.10E-03	**6.18E-08**	2.7E-07	2.7E-05 lb/hr	No
Selenium	2.40E-05	1.41E-09	3.1E-09	0.013 lb/hr	No
Vanadium	2.30E-03	1.35E-07	3.0E-07	0.003 lb/hr	No
Zinc	2.90E-02	1.71E-06	3.7E-06	0.667 lb/hr	No
Total HAP Emissions (ton/yr) =			0.000		

Notes:
1. Emission factors taken from AP-42, Section 1.4 *Natural Gas Combustion* (7/98)
2. TAPs lb/hr emissions are 24-hour averages unless shown in bold. Bold emissions are annual averages for carcinogens.
3. Air heater maximum estimated use 6 days/week; 24 hours/day; 30.4 weeks/year (7.6 months/year).

Table 3-13: Blast Cleaning Building Unit Heater - Exempt Combustion Emissions

Source Name/Model	No. of units	Input Duty BTU	MMBtu/hr	
Building Blast Heaters	2	300,000	0.6 MMBtu/hr	3843 CFM, ½ HP, 1050 RPM fans
Reznor Model UDAS-300				

MakeUp Air Heater Duty =
0.6 MMBtu/hr ÷ 1,020 MMBtu/MMscf = **5.88E-04 MMscf/hr**

Operating Assumptions: **24** hr/day
4,380 hr/yr [3]

Fuel Use:
0.014 MMscf/day
2.576 MMscf/year

Criteria Air Pollutants	Emission Factor[1] lb/MMscf	Emissions lb/hr	Emissions T/yr
NO_x	100	0.06	0.13
CO	84	0.05	0.11
PM_{10}	7.6	0.004	0.010
$PM_{2.5}$	7.6	0.004	0.010
SO_2	0.6	3.5E-04	7.7E-04
VOC	5.5	3.2E-03	7.1E-03
Lead	0.0005	2.9E-07	6.4E-07
		2.1E-04 lb/month	
Total Criteria Emissions (ton/yr) =			**0.25**

Greenhouse Gas Emissions		
CO_2 = 1 X 10^{-3} * MMBTU Gas * 53.06 kg CO_2/MMBTU		
CO_2 =	139	Metric Tons/year
CH_4 = 1 X 10^{-3} * MMBTU Gas * 0.001 kg CH_4/MMBTU		
CH_4 =	0.003	Metric Tons/year
N_2O = 1 X 10^{-3} * MMBTU Gas * 0.0001 kg N_2O/MMBTU		
N_2O =	0.000	Metric Tons/year
Total CO_2e = CO_2 + (CH_4 * 25) * (N_2O * 298)		
CO_2e =	**139**	**Metric Tons/year**

Hazardous & Toxic Air Pollutants (HAP & TAP)	Emission Factor[1] lb/MMscf	Emissions lb/hr[2]	Emissions T/yr	Modeling Threshold TAP Screening	Modeling Required?
PAH HAPs					
2-Methylnaphthalene	2.40E-05	**7.06E-09**	3.1E-08	9.1E-05 lb/hr	No
3-Methylchloranthrene	1.80E-06	**5.29E-10**	2.3E-09	2.5E-06 lb/hr	No
Acenaphthene	1.80E-06	**5.29E-10**	2.3E-09	9.1E-05 lb/hr	No
Acenaphthylene	1.80E-06	**5.29E-10**	2.3E-09	9.1E-05 lb/hr	No
Anthracene	2.40E-06	**7.06E-10**	3.1E-09	9.1E-05 lb/hr	No
Benzo(a)anthracene	1.80E-06	**5.29E-10**	2.3E-09		See POM
Benzo(a)pyrene	1.20E-06	**3.53E-10**	1.5E-09	2.0E-06 lb/hr	See POM
Benzo(b)fluoranthene	1.80E-06	**5.29E-10**	2.3E-09		See POM
Benzo(g,h,i)perylene	1.20E-06	**3.53E-10**	1.5E-09	9.1E-05 lb/hr	No
Benzo(k)fluoranthene	1.80E-06	**5.29E-10**	2.3E-09		See POM
Chrysene	1.80E-06	**5.29E-10**	2.3E-09		See POM
Dibenzo(a,h)anthracen	1.20E-06	**3.53E-10**	1.5E-09		See POM
Fluoranthene	3.00E-06	**8.82E-10**	3.9E-09	9.1E-05 lb/hr	No
Fluorene	2.80E-06	**8.24E-10**	3.6E-09	9.1E-05 lb/hr	No
Indeno(1,2,3-cd)pyrene	1.80E-06	**5.29E-10**	2.3E-09		See POM
Naphthalene	6.10E-04	3.59E-07	7.9E-07	3.33 lb/hr	No
Naphthalene	6.10E-04	**1.79E-07**	7.9E-07	9.1E-05 lb/hr	No
Phenanathrene	1.70E-05	**5.00E-09**	2.2E-08	9.1E-05 lb/hr	No
Pyrene	5.00E-06	**1.47E-09**	6.4E-09	9.1E-05 lb/hr	No
Polycyclic Org. Matter (POM, 7-PAH		3.35E-09	**1.5E-08**	2.0E-06 lb/hr	No
Non-PAH HAPs					
Benzene	2.10E-03	**6.18E-07**	2.7E-06	8.0E-04 lb/hr	No
Dichlorobenzene	1.20E-03	7.06E-07	1.5E-06	20 lb/hr	No
Formaldehyde	7.50E-02	**2.21E-05**	9.7E-05	5.1E-04 lb/hr	No
Hexane	1.80E+00	1.06E-03	2.3E-03	12 lb/hr	No
Toluene	3.40E-03	2.00E-06	4.4E-06	25 lb/hr	No
Non-HAP Organic Compounds					
7,12-Dimethylbenz(a)a	1.60E-05	9.41E-09	2.1E-08		
Butane	2.10E+00	1.24E-03	2.7E-03		
Ethane	3.10E+00	1.82E-03	4.0E-03		
Pentane	2.60E+00	1.53E-03	3.3E-03	118 lb/hr	No
Propane	1.60E+00	9.41E-04	2.1E-03		
Metals (HAPs)					
Arsenic	2.00E-04	**5.88E-08**	2.6E-07	1.5E-06 lb/hr	No
Barium	4.40E-03	2.59E-06	5.7E-06	0.033 lb/hr	No
Beryllium	1.20E-05	**3.53E-09**	1.5E-08	2.8E-05 lb/hr	No
Cadmium	1.10E-03	**3.24E-07**	1.4E-06	3.7E-06 lb/hr	No
Chromium	1.40E-03	8.24E-07	1.8E-06	0.033 lb/hr	No
Cobalt	8.40E-05	4.94E-08	1.1E-07	0.0033 lb/hr	No
Copper	8.50E-04	5.00E-07	1.1E-06	0.013 lb/hr	No
Manganese	3.80E-04	2.24E-07	4.9E-07	0.067 lb/hr	No
Mercury	2.60E-04	1.53E-07	3.3E-07	0.003 lb/hr	No
Molybdenum	1.10E-03	6.47E-07	1.4E-06	0.333 lb/hr	No
Nickel	2.10E-03	**6.18E-07**	2.7E-06	2.7E-05 lb/hr	No
Selenium	2.40E-05	1.41E-08	3.1E-08	0.013 lb/hr	No
Vanadium	2.30E-03	1.35E-06	3.0E-06	0.003 lb/hr	No
Zinc	2.90E-02	1.71E-05	3.7E-05	0.667 lb/hr	No
Total HAP Emissions (ton/yr) =			0.002		

Notes:
1. Emission factors taken from AP-42, Section 1.4 *Natural Gas Combustion* (7/98)
2. TAPs lb/hr emissions are 24-hour averages unless shown in bold. Bold emissions are annual averages for carcinogens.
3. Unit heaters maximum estimated use 6 days/week; 24 hours/day; 30.4 weeks/year (7.6 months/year).

3.2 Paint Solvent Recycling – SR1

Used Dupont 105 cleaning solvent is recycled in a 6-gallon Becca Model 9725 solvent distillation unit located in the Paint Storage Building. Approximately, 5-10 gallons of used solvent is generated and recycled each day. The unit is generally operated once per day and yields approximate 95% of useable solvent. Specifications for the recycling unit are provided in Appendix A. Specifications for the solvent are provided in Appendix B. Emissions are conservatively estimated on a 10-gallons/day and 365 days/year basis. Emissions from the unit are vented into the room and then to outside air via a vent on the top of the Paint Storage Building. Estimated volatile emissions are provided in Table 3-11 (below).

Table 3-14: Solvent Recycling Emissions

Solvent Recycling

Dupont 105 Composition	Density	Solids	VOC (non-exempt)	Ethylbenzene	Toluene	Methyl n-Amyl Ketone	methyl isoamyl ketone	Xylene	Heptane	V. M. & P. Naphtha	Methyl Alcohol (methanol)	isopropyl alcohol	Acetone	MEK
	lb/gal	Weight Percentage Content Data	Weight Percentage Content Data	100-41-4	108-88-3	110-43-0	112-12-3	1330-20-7	142-82-5	64742-89-8 8032-32-4	67-56-1	67-63-0	67-64-1	78-93-3
	6.78	0.0%	100.00%	2.0%	19.0%	55.0%	4%	8.0%	15%	15.0%	50%	15%	26.0%	25.0%

Use Amount			VOC	Ethylbenzene	Toluene	Methyl n-Amyl Ketone	methyl isoamyl ketone	Xylene	Heptane	V. M. & P. Naphtha	Methyl Alcohol	isopropyl alcohol	Acetone	MEK
	Daily Use Amount (gal/day)	Use Amount 24 Average (lbs/hr)	Use Amount 24-hr.-Avg (lbs/hr)	Use Amount 24-hr.-Avg (lbs/hr)	Use Amount 24-hr.-Avg (lbs/hr)	Use Amount 24-hr.-Avg (lbs/hr)	Use Amount 24-hr.-Avg (lbs/hr)	Use Amount 24-hr.-Avg (lbs/hr)	Use Amount 24-hr.-Avg (lbs/hr)	Use Amount 24-hr.-Avg (lbs/hr)	Use Amount 24-hr.-Avg (lbs/hr)	Use Amount 24-hr.-Avg (lbs/hr)	Use Amount 24-hr.-Avg (lbs/hr)	Use Amount 24-hr.-Avg (lbs/hr)
	10.0	2.8	2.83E+00	5.65E-02	5.37E-01	3.11E-02	2.15E-02	2.49E-03	3.22E-03	3.73E-04	1.61E-03	5.59E-05	4.19E-04	1.40E-05

Amount Emitted	VOC	Ethylbenzene	Toluene	Methyl n-Amyl Ketone	methyl isoamyl ketone	Xylene	Heptane	V. M. & P. Naphtha	Methyl Alcohol (methanol)	isopropyl alcohol	Acetone	MEK
	Amount Emitted 24-hr.-Avg (lbs/hr)	Amount Emitted 24-hr.-Avg (lbs/hr)	Amount Emitted 24-hr.-Avg (lbs/hr)	Amount Emitted 24-hr.-Avg (lbs/hr)	Amount Emitted 24-hr.-Avg (lbs/hr)	Amount Emitted 24-hr.-Avg (lbs/hr)	Amount Emitted 24-hr.-Avg (lbs/hr)	Amount Emitted 24-hr.-Avg (lbs/hr)	Amount Emitted 24-hr.-Avg (lbs/hr)	Amount Emitted 24-hr.-Avg (lbs/hr)	Amount Emitted 24-hr.-Avg (lbs/hr)	Amount Emitted 24-hr.-Avg (lbs/hr)
	4.66E-03	9.32E-05	8.86E-04	5.13E-05	3.54E-05	4.10E-06	5.31E-06	6.15E-07	2.66E-06	9.23E-08	6.91E-07	2.31E-08

VOC Amount Emitted (365 day year) (tons/year)	2.0E-02

NOTES

1 Chemical composition 105 Solvent, in addition to MSDS data, provided by Victor, Axalta Coating Systems, 3/19/14 1320 hrs.
2 AP-42, Chapter 4.7, condenser vent 3.3 lbs/ton = 0.165%; emitted from room to outside air via vent on top of Paint Room Storage Building.
Vent on top of Paint Room Storage

Dupont 105	density	acetone	ethylbenzene	methyl alcohol	ethyl ethyl keto	toluene	xylene	heptane 142-82-5	isopropyl alcohol 67-63-0	methyl isoamyl ketone 112-12-3	VM&P naphtha 8032-32-4 64742-89-8 64742-88-7	methyl n-amyl ketone 110-43-0
	6.78	26%	2%	50%	25%	19%	8%	15.00%	15.00%	4.000%	15.00%	55.0%
DEQ 585 EL (lbs./hr.)		119	29	17.3	39	25	29	109.0	10.0	13.7	91.3	15.7
MAX gals/day =EL		74,476	235,944	5,630	25,580	21,411	58,986	118,243	10,848	55,732	99,042	4,645
Limiting TAP	methyl n-amyl ketone											
Limiting TAP (gals/day)		4,645										

3.3 Media Blast Cleaning

3.3.1 Blast Building – MB1

The majority of media blast cleaning is performed at the enclosed Blast Building. The process uses a Clemco Model 3661 10-cubic foot blast machine, initially charged with 40,000 lbs. of Amasteel abrasive. Specifications for the Clemco equipment are provided in Appendix A. Specifications for the Amasteel abrasive are included in Appendix B.

Used media is recovered at the floor of the Blast Booth and conveyed with a screw conveyor to a cyclone that separates useable media from unusable fines. Unusable fines are conveyed to a covered 55-gallon drum beneath the cyclone with approximately 10-15 gallons of fines accumulating each week. Exhaust from the cyclone is conveyed to a bank of Farr GS-20 Gold filters located outside the building that exhaust back into the building. Specifications for the Far GS-20 are included in Appendix B. Fines captured on the filters are collected in a 55-gallon drum located beneath the Farr unit. Approximately 1.5 drums per week of cyclone and Farr fine particulate are accumulated per week.

Particulate emissions conveyed back inside the building are calculated using an exhaust filter efficiency of 99.7% rather the manufacturer's typical rating of 99.99% because the manufacturer would not certify efficiency since the filter media was purchased second-hand. The filter media used is identical to current FARR media. Specifications for the Farr filtration equipment are provided in Appendix A. After the media is completely spent, new Farr filter media with certification statement will be used. The emission rate of fine particulate and TAPs discharging from the room air outside the building cannot be readily quantified. TAP emissions are estimated with and without control and assumed to be discharged to outside air without reduction. Controlled TAP emissions are considerably less than all TAP ELs. Emissions are provided in Table 3-15 (below).

3.3.2 Building 10 Media Blasting – MB2

A small amount media blast cleaning is performed at Building 10 in a small enclosed blast box manufactured by Cyclone Mfg. Specifications for the blast box are provided in Appendix A. Media use includes Ballotini Glass Beads, Saint-Gobain Abrasive and Saint Gobain Super Abrasive; a conservative estimate of material use is 100 lbs. per year. Material specification sheets are included in Appendix B.

Used media is recovered and recycled back into the unit. Exhaust from the media blast box unit is conveyed to a Torit Cyclone 20-5 with filter bags located outside the building. Specifications for the Torit 20-5 filter are included in Appendix B.

In accordance with Bay Area Air Quality Management District guidance for estimating glass bead media blast emissions, emissions of substrate are assumed to be negligible. Particulate emissions are calculated with a minimum efficiency 99.9% for >2 micron filter partially loaded, 99.99 for >10 microns. TAP emissions are estimated with and without control in order to compare emission rates to TAP Level I exemption screening levels (IDAPA 223.02). Emissions are provided in Table 3-16 (below).

Table 3-15 Blast Booth Emissions

Material	Estimated Max Unrestricted New Media Usage[1]		Estimated Max Restricted New Media Usage[1]		Constituents	CAS Number	Constituent Concentration (max wt%)[2]	Emission Factor 0.013 lbs/lbs media[3]	Unrestricted Uncontrolled Emissions		Restricted Uncontrolled Emissions		Cyclone Efficiency (%)[4]	Control Equipment Efficiency (%)[5]	Unrestricted Controlled Emissions		Restricted Controlled Emissions	
	lb/hr	lb/yr	lb/hr	lb/yr					lb/hr	lb/yr	lb/hr	lb/yr			lb/hr	lb/yr	lb/hr	lb/yr
Amasteel Abrasive	3,419.00	29,950,440.00	2,849.17	14,223,040	Carbon	7440-44-0	1.2%	0.013	5.3E-01	4.7E+03	4.4E-01	2.2E+03	0%	99.7%	1.6E-03	1.4E+01	1.3E-03	6.7E+00
					Chromium Total	7440-47-3	NA											
					Chromium +6		NA											
					Copper	7440-50-8	NA											
					Iron	7439-89-6	96%		4.3E+01	3.7E+05	3.6E+01	1.8E+05			1.3E-01	1.1E+03	1.1E-01	5.3E+02
					Manganese	7439-96-5	1.2%		5.3E-01	4.7E+03	4.4E-01	2.2E+03			1.6E-03	1.4E+01	1.3E-03	6.7E+00
					Nickel	7440-02-0	NA											
					Phosphorous	7723-14-0	0.035%		1.6E-02	1.4E+02	1.3E-02	6.5E+01			4.7E-05	4.1E-01	3.9E-05	1.9E-01
					Silicon	7440-21-3	1.0%		4.4E-01	3.9E+03	3.7E-01	1.8E+03			1.3E-03	1.2E+01	1.1E-03	5.5E+00

Abrasive TAP Emissions Summary	TAP Type (24 hr or Annual Avgd EL)	EL (lb/hr)	Unrestricted Uncontrolled Emissions (lb/hr)	Unrestricted Uncontrolled Emissions (lb/yr)	Restricted Uncontrolled Emissions (lb/hr)	Restricted Uncontrolled Emissions (% of EL)	Restricted Uncontrolled Emissions (lb/yr)	Restricted Controlled Emissions (lb/hr)	Restricted Controlled Emissions (% of EL)	Restricted Controlled Emissions (lb/yr)
Chromium	585 (24 hr)	0.033	0.0E+00	0.0E+00	0.0E+00	0%	0.0E+00	0.0E+00	0.000%	0.0E+00
Copper	585 (24 hr)	0.067	0.0E+00	0.0E+00	0.0E+00	0%	0.0E+00	0.0E+00	0.000%	0.0E+00
Manganese Dust	585 (24 hr)	0.333	5.3E-01	4.7E+03	4.4E-01	133%	2.2E+03	1.3E-03	0.400%	6.7E+00
Nickel	586 (Annual)	2.75E-05	0.0E+00	0.0E+00	0.0E+00	0%	0.0E+00	0.0E+00	0.000%	0.0E+00
Phosphorous	585 (24 hr)	7.00E-03	1.6E-02	1.4E+02	1.3E-02	185%	6.5E+01	3.9E-05	0.556%	1.9E-01
Silicon	585 (24 hr)	0.667	4.4E-01	3.9E+03	3.7E-01	56%	1.8E+03	1.1E-03	0.167%	5.5E+00

Criteria Pollutant Emissions Summary	Unrestricted Uncontrolled Emissions into Bldg (tons/yr)	Restricted Controlled Emissions into Bldg (lb/hr)	Restricted Controlled Emissions into Bldg (tons/yr)	@2015 levels	@15% growth
PM_{10}	194.68	0.1111	0.2773	complies w/ 99.5%	complies w/99.6%

Notes:

1. Spray gun with #6 nozzles = 3419 lbs per hour; each shift 5.6 hrs w/1 gun=19,146.4 lbs; 1.4 hrs w/2 guns=9,573.2 lbs; 57,439.2 lbs per day in 2 10-hour shifts, 4 days/week, 52 weeks/year.
   Assume growth, double time using 2 guns: 3 hrs 2 guns + 4 hrs 1 gun = (3419*2*3)+ (3419*1*4) = 20,514+ 13,676 = 34,190 lbs/shift. 2 shifts = 68,380 lbs media each day 4 days/week, 52 weeks/year.
2. Metaltec High Carbon Cast Steel Grit
3. From "Abrasive Blasting (Confined)," Bay Area AQMD, May 15, 1998, www.baaqmd.gov/pmt/handbook/s11c01pd.htm and AP-42 13.2.6.
4. Media reclaim sorting equipment.
5. Farr baghouse Model GS20, 20 cannister filter elements, 22500 CFM. Controlled emissions are calculated using an exhaust filter removal efficiency of 99.7.0%, rather than +99.99%,
   since FARR would not certify efficiency due to second-hand purchase of filter media; filter media is identical to current FARR media. After the media is completely spent, new FARR filter media with certfication statement will be used.
6. Building 40 ft X 80 Ft X 21 ft eave height = 67,200 cubic feet;

Table 3-16 Building 10 Media Blast Emissioins

Material	Estimated Max Unrestricted New Media Usage[1]		Estimated Max Restricted New Media Usage[2]		Constituents	CAS Number	Constituent Concentration (max wt%)	Emission Factor 0.013 lbs/lbs media[3]	Unrestricted Uncontrolled Emissions		Restricted Uncontrolled Emissions		Cyclone Efficiency (%)	Control Equipment Efficiency (%)[4]	Unrestricted Controlled Emissions		Restricted Controlled Emissions	
	lb/hr	lb/yr	lb/hr	lb/yr					lb/hr	lb/yr	lb/hr	lb/yr			lb/hr	lb/yr	lb/hr	lb/yr
Ballotini Glass Beads	0.03	219	0.02	100	$PM_{10/2.5}$	NA	100.0%	0.013	3.3E-04	2.85E+00	2.17E-04	1.30E+00	0%	99.90%	3.3E-07	2.85E-03	2.17E-07	1.30E-03
Saint-Gobain Abrasive	0.03	219	0.02	100	PM		100.0%	0.013	3.3E-04	2.85E+00	2.17E-04	1.30E+00	0%	99.90%	3.3E-07	2.85E-03	2.17E-07	1.30E-03
					Silicon Carbide	409-21-2	100.00%		3.3E-04	2.85E+00	2.17E-04	1.30E+00			3.3E-07	2.85E-03	2.17E-07	1.30E-03
					Amorphous Silica-Fused	60676-86-0	30%		9.8E-05	8.54E-01	6.50E-05	3.90E-01			9.8E-08	8.54E-04	6.50E-08	3.90E-04
Saint-Gobain Super Abrasive	0.03	219	0.02	100	PM		100.0%	0.013	3.3E-04	2.85E+00	2.17E-04	1.30E+00	0%	99.90%	3.3E-07	2.85E-03	2.17E-07	1.30E-03
					Aluminum	7429-90-5	100.00%		3.3E-04	2.85E+00	2.17E-04	1.30E+00			3.3E-07	2.85E-03	2.17E-07	1.30E-03
					Aluminum oxide	NA	30.00%		9.8E-05	8.54E-01	6.50E-05	3.90E-01			9.8E-08	8.54E-04	6.50E-08	3.90E-04
					Silicon Carbide	409-21-2	5%		1.6E-05	1.42E-01	1.08E-05	6.50E-02			1.6E-08	1.42E-04	1.08E-08	6.50E-05
					Formaldehyde	50-00-0	0.05%		7.4E-08	6.50E-04	7.42E-08	6.50E-04			7.4E-11	6.50E-07	7.42E-11	6.50E-07

Abrasive TAP Emissions Summary	TAP Type (24 hr or Annual Avgd EL)	EL (lbs/hr)	Restricted Uncontrolled Emissions (lb/hr)	Restricted Controlled Emissions (lb/hr)	Restricted Controlled Emissions (lb/yr)	% of EL
Aluminum	585 (24 hr)	6.67E-01	2.2E-04	2.2E-07	1.3E-03	0.0%
Aluminum oxide	585 (24 hr)	6.67E-01	6.5E-05	6.5E-08	3.9E-04	0.0%
Formaldehyde	586 (Annual)	5.10E-04	7.4E-08	7.4E-11	6.5E-07	1.5E-07
Silicon Carbide	585 (24 hr)	6.67E-01	2.3E-04	2.3E-07	1.4E-03	0.00003%
Silica-Fused	585 (24 hr)	6.70E-03	6.5E-05	6.5E-08	3.9E-04	0.001%

not modeled

HAP Emissions Summary	Restricted Controlled Emissions lbs/hr	Controlled Emissions tons/yr
Formaldehyde		

Criteria Pollutant Emissions Summary	Unrestricted Uncontrolled Emissions (tons/yr)	Restricted Controlled Emissions (lb/hr)	Restricted Controlled Emissions (tons/yr)
$PM_{10/2.5}$	0.004	0.000001	0.000002

Assume negligible substrate PM2.5/10 removed with glass beads, per BAAQMD

1. 100 lbs. Glass Beads/yr according to Tom Hogan, based on info from Carl, Email Tom Hogan to Mark Torf, 5/26/15.
2. Tom Hogan, approx. 1 hour/week total use for abrasive blasting and grinding, email 4/24/15 Example aluminum constituents based on msds, Alcoa
3. From "Abrasive Blasting (Confined)," Bay Area AQMD, May 15, 1998, www.baaqmd.gov/pmt/handbook/s11c01pd.htm and AP-42 13.2.6.
4. Torit Cyclone 20-5 with filter bags; Minimum efficiency 99.9% for >2 micron filter partially loaded, 99.99 for >10 microns

Example Calculation

Calculate 24-average lbs/hr from actual lbs/yr
(100 lbs/yr)/(5 days/week*24 hrs/day*50 weeks/yr) = 0.02 actual lbs/hr
Scale actual restricted to max PTE
(0.02 actual lbs/hr * 24 max. hrs)/(16 actual hours) = 0.025 max. lbs/hr
(0.025 max. lbs/hr * 8760 hrs/yr) = 219 unrestricted lbs/yr

Calculate PM emissions
(restricted lbs/hr) * (constituent %) * (emission factor) * control efficiency = restricted controlled emissions
(0.02 lbs/hr * 0.013 * (100%-99.9%) = Restricted controlled lbs/hr

3.4 Welding – W1

Welding is performed at various stations in Building 1. Welding is primarily Gas Metal Arc Welding (GMAW) and Submerged Arc Welding (SAW) with carbon steel wire, concentrated in the southeast quadrant of the Building. Smaller amounts of mig/tig welding using aluminum welding wire is performed at the west side of the Building. GMAW and mig/tig welding using aluminum wire is performed at Building 8. GMAW welding with carbon steel wire and stainless steel wire is performed at Building 10. There are approximately 85 welders, operating in 2 shifts, a total of 20 hours per day, generally 4 days per week. Occasionally, 1 additional 10-hour shift is performed on a 5th day. Specifications for each welding wire used are included in Appendix B.

Total amounts of wire purchased and estimated distribution of use at each building is shown in the following Table:

Table 3-17 Estimated Welding Wire Use Distribution at Building Use Areas

	Welding Wire	2015 (lbs.)		Building
STEEL	Quantum arc D-2 .035 45#spool	540	100%	10
	Premier arc 6 .035 45#spool	79,785	68.50%	1
			31.50%	10
	Premier arc 6 .045 45# spool	180	100%	10
	Lincolweld L-70 5/64 60# spool	2,400	100%	1
	Lincolnweld L-705 5/64 600# drum	4,800	100%	1
	Lincoln 781 flux	13,400	100%	1
SS	S.S. 308 LSI .035 25# spool		100%	10
	HPG 308LHSO 035 x 25# spool	975	100%	10
	Lin. 308 Lsi 035 x 25# spool	150	100%	10
	UTP Avesta 309L 035 x 33# spool	33	100%	10
ALUM.	Alcotec 5356 3/32 Tig rod 10# box	340	90.00%	8
			10.00%	1
	Alcotec 5356 1/16 Tig rod 10# box	20	100.00%	8
	Alcotec 5356 1/8 Tig rod 10# box	480	90.00%	8
			10.00%	1
	Hobart Maxal 5356 1/8 tig rod 10# box		100.00%	8
	Esab 5356 1/16 20# spool		64.50%	8
			35.50%	1
	Hobart Maxal 5356 3/64 16# spool	4,176	80.00%	8
			20.00%	1
	Hobart Maxal 5356 1/16 16# spool	3,152	60.00%	8

			40.00%	1
	Total	110,431		

Estimated emissions are based on 2015 purchase amounts plus a potential growth factor of 25%. Emissions are estimated using the emission factors included in San Diego Air Pollution Control District Welding Operations Guidance and the fume correction factors supplied by NASSCO, updated October 1998.[19]

Emission calculations and the hierarchy of SDAPCD welding emission factors are shown below and in Tables 3-15, 3-16 and 3-17.

Example Calculation Building 1 Manganese (585 TAP) in GTAW Mig/Tig ALC 5356
Max. estimated manganese Emission lbs./yr. = ALC 5356 lbs/yr. * % Mn * fume emission factor
* Fume correction factor
= 102.5 lbs./yr. * 0.2% * 1 % *0.5464 = 0.0011 lbs. Mn/yr.

Example Calculation Building 1 Manganese (585 TAP) in GMAW Premier Arc 6
Max. estimated manganese Emission lbs./yr. = Premier Arc 6 lbs/yr. * AP-42 Factor
= 68,316 lbs./yr. * 0.03% = 20.49 lbs. Mn/yr.

Total all Mn lbs./yr for all welding wire at each building and divide by 4800 hours (4 day/week * 50 weeks/yr.* 24 hrs./day) to obtain Mn lbs./hr. for each building.

Example Calculation Building 1 Chromium (586 TAP) in GTAW Mig/Tig ALC 5356
Max. estimated Cr lbs./yr. = ALC 5356 lbs./yr. * % Cr * fume emission factor
* Fume correction factor
= 102.5 lbs./yr. * 0.20% * 1% * 0.5464 Fume correction factor = 0.0011 lbs. Mn/yr.
Max. estimated Mn Emission lbs./hr. = 1.1 E-3 lbs. Mn/yr / (8760 hrs.) = 1.28E-7 lbs. Mn/hr.

Example Calculation Building 10 Chromium (586 TAP) in GMAW (Harris) Lin. 308 Lsi
Max. estimated Cr Emission lbs./yr. = lbs./yr. Lin. 308 Lsi * AP-42 Factor
= 187.5 lbs/yr. * 0.0524% fume emission factor = 0.098 lbs. Cr/yr.
Max. estimated Cr Emission lbs./hr. 0.098 lbs. Cr/yr./ (8760 hrs.) = 1.1 E-5 lbs./hr.

Total all Cr lbs./yr for all welding wire at each building and divide by 4800 hours (4 day/week * 50 weeks/yr.* 24 hrs./day) to obtain Cr lbs./hr. for each building.

[19] http://www.sandiegocounty.gov/content/dam/sdc/apcd/PDF/Misc/EFT/Welding/APCD_SMAW_E6013.pdf

Table 3-18: Building 1 Welding Emissions Summary

Building 1 Welding Material Purchases	**TAP/HAP Metal**	**Al**	**Cr**	**Cr+6**	**Cu**	**Fe**	**Mg**	**Mn**	**Molyb**	**Ni**	**Silicon**	**Zn**	**Titanium**	**Be**	**Co**
Welding Process/Electrode	CAS No.	7429-90-5	7440-47-3	18540-29-9	7440-50-8	7439-89-6	7439-96-5	7439-96-5	7439-98-7	7440-02-0	7440-21-3	7440-66-6		7440-41-7	7440-48-4
Aluminum Fillers	**Annual Use (lbs.)[1]**	**Al**	**Cr**		**Cu**	**Fe**	**Mg**	**Mn**	**Molyb**	**Ni**	**Silicon**	**Zn**	**Titanium**	**Be**	**Co**
[4]GTAW Mig/Tig ALC 4043		93%			0.3%	0.80%	0.05%	0.05%			6.0%	0.1%	0.2%	<0.0003%	
[4]GTAW Mig/Tig ALC 5356	102.5	93%	0.20%		0.1%	0.4%	5.5%	0.2%			0.25%	0.10%	0.25%	<0.0003%	
[4]GMAW Mig/Tig ESAB 5356		93%	0.20%		0.1%	0.4%	5.5%	0.2%			0.25%	0.10%	0.20%	<0.0003%	
[4]GMAW Mig/Tig Hobart Maxal 5356	2,620	99.7%	0.50%		0.50%	1%	6%	2%		0.05%	14%			<0.0003%	
Subtotal Aluminum Wire lbs.	2,723	2,707	13		13	27	163	53	0	1	367	0	0	0.008	0
Carbon Fillers	**Annual Use (lbs.)[1]**	**Al**	**Cr**	**Cr+6**	**Cu**	**Fe**	**Mg**	**Mn**	**Molyb**	**Ni**	**Silicon**	**Zn**	**Titanium**	**Be**	**Co**
[2, 3]GMAW Hobart E70 Quantum Arc D2					5.0%	90.0%		10%	1.0%		5.0%				
[2,3]GMAW Premier Arc 6 0.035 and 0.45 45 lb spool	68,316				5.0%	90.0%		10%	1.0%		5.0%				
[4]SAW (Submerged Arc Welding) Lincoln Weld L-70 & L-705	9,000				0.5%	98.5%		0.50%	0.50%						
[3]SAW (Submerged Arc Welding) Lincoln Weld 781 Flux	16,750					5.0%		10.0%			5.0%				
Subtotal Carbon Steel Wire lbs.	94,066	-	-		3,461	71,187	-	8,552	728	-	4,253	-	-	-	-
Stainless Steel	**Annual Use (lbs.)[1]**	**Al**	**Cr**	**Cr+6**	**Cu**	**Fe**	**Mg**	**Mn**	**Molyb**	**Ni**	**Silicon**	**Zn**	**Titanium**	**Be**	**Co**
[3]GMAW (Harris) Lin. 308 Lsi 035 x 25# spool			40.0%		1.0%	60.0%		5.0%	1.0%	30.0%	1.5%				1.0%
[3]GMAW (Harris) HPG 308LHSO 035 x 25# spool			40.0%			60.0%		5.0%	1.0%	13.0%	1.0%				1.0%
[4]Avesta 309L 035 x 33# spool,			25.0%							12.5%			12.5%		
[4]Avesta 248 SV(308L-Si, 308L, 308H, 347-Si, 347, 316L-Si, 316L, 318-Si, 318, 317L, 307-Si, 309L, 310, 253)			30.0%		2.0%	16.0%		10.0%	5.0%	36.0%	1.0%				
[3]Lincoln Electric Mig 308LSi			40.0%		1.0%	60.0%		5.0%	1.0%	30.0%	1.5%				1.0%
[3]GMAW Harris HPG 308LSI 035 X 25# Stainless 1999			22%		0.75%	62.00%		2.50%	0.75%	11%	1%				
Subtotal Stainless Steel Wire lbs.	0.00		0		0	0		0	0	0	0				
Total Rod Use	96,789														
CAS No.		7429-90-5	7440-47-3	18540-29-9	7440-50-8	7439-89-6	7439-96-5	7439-96-5	7439-98-7	7440-02-0	7440-21-3	7440-66-6		7440-41-7	7440-48-4
Metal	**PM10 total**	**Al**	**Cr**	**Cr+6**	**Cu**	**Fe**	**Mg**	**Mn**	**Molyb**	**Ni**	**Silicon**	**Zn**	**Titanium**	**Be**	**Co**
TAP		**X**	**X**	**X**	**X**	**X**	**X**	**X**	**X**	**X**	**X**	**X**		**X**	**X**
HAP			**X**	**X**				**X**		**X**				**X**	**X**
Table 12.19-1 and SDAPCD w/NASSCO fume correction			X	X				X		X					X
Table 12.19-2 and SDAPCD w/NASSCO fume correction			X	X				X		X					X
SDAPCD w/ GMAW/SMAW NASSCO fume correction		X	X	X	X	X	X	X	X	X	X	X	X	X	X
SDAPCD Unspecified Process		X	X	X	X	X	X	X	X	X	X	X	X	X	X
IDEQ EL Dust (lbs./hr.)	---	6.7E-01	3.3E-02	5.6E-07	6.7E-02	---	---	3.3E-01	6.7E-01	2.70E-05	6.7E-01	6.7E-01	---	2.80E-05	3.30E-03
Fume lbs/yr	8.2E+02	1.5E+01	1.4E-01	3.6E-03	2.0E+01	7.6E+02	8.9E-01	2.4E+01	5.8E+00	7.5E-02	2.0E+01	5.6E-04	1.4E-03	4.5E-05	6.8E-02
(Assume use in 4 days/week, 50 weeks/yr=200 days/yr; 24 hour average/day; (if 5 days occasionally the value would be lower)	1.71E-01	3.1E-03	2.9E-05	4.1E-07	4.2E-03	1.6E-01	1.9E-04	5.1E-03	1.2E-03	8.6E-06	4.1E-03	1.2E-07	2.9E-07	9.3E-09	1.4E-05
IDEQ EL Fume (lbs./hr.)		---	---	---	1.3E-02	3.3E-01	6.7E-01	6.7E-02	---	---	---	3.330E-01	---	---	3.3E-03

< TAP EL > TAP EL

Table 3-18: Building 1 Welding Emissions Summary

NOTES

[1]2015 Welding Wire Use amounts X Growth Factor 1.25

[2]Hobart MSDS No. 415841 and listed hazardous ingredients apply to both Hobart Quantum Arc D2 and Premier Arc 6 material compositions; Kim Wyndance, Western Trailer, via Norco Supplier. 8/29/14.

[3]Calculation Method With AP-42 Emission Factors, AP-42 Table 12.19-1, Table 12.19-2

Hobart GMAW E70S and Premier Arc 6	5.2 lbs/1000 lbs electrode			0.52% fume generation			Safety Data Sheet Composition						
TAP	Cr	Cr+6	Cobalt	Mn	Ni	Pb	Cu	Cr	Fe	Mn	Moly	Ni	Si
	0.0001%	ND	0.0001%	0.03%	0.0001%	ND	5%	ND	90%	10%	1%	ND	5
Lincoln Electric and Harris GMAW 308L, 308Lsi	5.4	lbs/1000 lbs electrode		0.54% fume generation			Safety Data Sheet Composition						
TAP	Cr	Cr+6	Cobalt	Mn	Ni	Pb	Cu	Cr	Fe	Mn	Moly	Ni	Si
	0.0524%	ND	0.0001%	0.03%	0.0184%	ND	0.75%	22%	62%	3%	1%	11%	1%
Lincoln Electric Weld Flux 781 EM12K1	0.05 lbs/1000 lbs electrode			0.01% fume generation			Safety Data Sheet Composition						
TAP	Cr	Cr+6	Cobalt	Mn	Ni	Pb	Cu	Cr	Fe	Mn	Moly	Ni	Si
	ND	ND	ND	ND	ND	ND	ND	ND	5%	10%	ND	ND	5%

[4]Calculation Method Without AP-42 Emission Factors: SDAPCD G99 Gas Metal Arc Weldging (GMAW), Unspecified Electrode, General District-ARB-NASSCO GMAW Emission Estimation Procedure.

Eh = max hourly emissions of each TAP Ea= annual emissions of each TAP

Ea= Ua X EF (fume rate rod lbs fume/lbs rod) X Nasso fume Correction Factor X Concentration metal

Eh=Uh X EF (fume rate rod lbs fume/lbs rod) X Nasso fume Correction Factor X Concentration metal

Welding Process	lbs fume/lbs rod
default fume rates GMAW, MIG, TIG	1%
default fume rates SMAW, FCAW	2%
default fume rates unspecified	5%
default fume Correction Factor GMAW, MIG, TIG	0.5464
default fume Correction Factor SMAW, FCAW	0.2865
default fume Correction Factor unspecified	1.0
default Cr+6 conversion rates GMAW, MIG, TIG	0.05
default Cr+6 conversion rates SMAW, FCAW	0.63
default Cr+6 conversion rates unspecified	0.1
default emission factor (lbs./lbs rod)	
PM10 (PM2.5)	0.01
Cr+3	0.01*0.5464*.95*CI
Cr+6	0.01*0.5464*.05*CI
Cobalt	0.01*0.5464*CI
Manganese	0.01*0.5464*CI
Nickel	0.01*0.5464*CI
Lead	0.01*0.5464*CI
Metals w/o EF	0.01*0.5464*CI

Calculation Map For Welding Wire Products

Welding Wire	Row	AP-42 Table 12.1	AP-42 Table 12.2 Cr, Cr+6, Mn, Co, Pb	Process Type	Correction
GTAW Mig/Tig ALC 4043	5 (9)	NA	NA	1% default	0.5464
GTAW Mig/Tig ALC 5356	6 (9)	NA	NA	1% default	0.5464
GMAW Mig/Tig ESAB 5356	7 (9)	NA	NA	1% default	0.5464
GMAW Mig/Tig Hobart Maxal 5356	8 (9)	NA	NA	1% default	0.5464
GMAW Hobart E70 Quantum Arc D2	12	X	X	NA	NA
GMAW Premier Arc 6	13	X	X	NA	NA
SAW Lincoln Weld L-70 and L-705	14	NA	NA	5% default	1
SAW Lincoln Weld 781 Flux	15	X	X	NA	NA
GMAW Harris HPG 308LS	19	X	X	NA	NA
GMAW Harris HPG 308L	20	X	X	NA	NA
Avesta 309L	21			1% default	0.5464
Lincoln Electric Mig 308LSi	23	X	X	NA	NA

Table 3-19 Building 8 Welding Emissions Summary

Bldg 8 Welding Material Purchases	**TAP/HAP Metal**	**Al**	**Cr**	**Cr+6**	**Cu**	**Fe**	**Mg**	**Mn**	**Molyb**	**Ni**	**Silicon**	**Zn**	**Titanium**	**Be**	**Co**
Welding Process/Electrode	CAS No.	7429-90-5	7440-47-3	18540-29-9	7440-50-8	7439-89-6	7439-96-5	7439-96-5	7439-98-7	7440-02-0	7440-21-3	7440-66-6		7440-41-7	7440-48-4
Aluminum Fillers	**Annual Use (lbs.)[1]**	**Al**	**Cr**		**Cu**	**Fe**	**Mg**	**Mn**	**Molyb**	**Ni**	**Silicon**	**Zn**	**Titanium**	**Be**	**Co**
[4]GTAW Mig/Tig ALC 4043		93%			0.3%	0.80%	0.05%	0.05%			6.0%	0.1%	0.2%	<0.0003%	
[4]GTAW Mig/Tig ALC 5356	948	93%	0.20%		0.1%	0.4%	5.5%	0.2%			0.25%	0.10%	0.25%	<0.0003%	
[4]GMAW Mig/Tig ESAB 5356		93%	0.20%		0.1%	0.4%	5.5%	0.2%			0.25%	0.10%	0.20%	<0.0003%	
[4]GMAW Mig/Tig Hobart Maxal 5356	6,540	99.7%	0.50%		0.50%	1%	6%	2%		0.05%	14%			<0.0003%	
Subtotal Aluminum Wire lbs.	7,488	7,402	35		34	69	445	133	0	3	918	1	2	0.022	0
Carbon Fillers	**Annual Use (lbs.)[1]**	**Al**	**Cr**	**Cr+6**	**Cu**	**Fe**	**Mg**	**Mn**	**Molyb**	**Ni**	**Silicon**	**Zn**	**Titanium**	**Be**	**Co**
[2,3]GMAW Hobart E70 Quantum Arc D2					5.0%	90.0%		10%	1.0%		5.0%				
[2,3]GMAW Premier Arc 6 0.035 and 0.45 45 lb spool					5.0%	90.0%		10%	1.0%		5.0%				
[4]SAW (Submerged Arc Welding) Lincoln Weld L-70 & L-705					0.5%	98.5%		0.50%	0.50%						
[3]SAW (Submerged Arc Welding) Lincoln Weld 781 Flux						5.0%		10.0%			5.0%				
Subtotal Carbon Steel Wire lbs.	0	-	-		-	-	-	-	-	-	-	-	-	-	-
Stainless Steel	**Annual Use (lbs.)[1]**	**Al**	**Cr**	**Cr+6**	**Cu**	**Fe**	**Mg**	**Mn**	**Molyb**	**Ni**	**Silicon**	**Zn**	**Titanium**	**Be**	**Co**
[3]GMAW (Harris) Lin. 308 Lsi 035 x 25# spool			40.0%		1.0%	60.0%		5.0%	1.0%	30.0%	1.5%				1.0%
[3]GMAW (Harris?) HPG 308LHSO 035 x 25# spool			40.0%			60.0%		5.0%	1.0%	13.0%	1.0%				1.0%
[4]Avesta 309L 035 x 33# spool			25.0%							12.5%			12.5%		
[4]Avesta 248 SV(308L-Si, 308L, 308H, 347-Si, 347, 316L-Si, 316L, 318-Si, 318, 317L, 307-Si, 309L, 310, 253))			30.0%		2.0%	16.0%		10.0%	5.0%	36.0%	1.0%				
[3]Lincoln Electric Mig 308LSi			40.0%		1.0%	60.0%		5.0%	1.0%	30.0%	1.5%				1.0%
[3]GMAW Harris HPG 308LSI 035 X 25#			22%		0.75%	62.00%		2.50%	0.75%	11%	1%				
Subtotal metal lbs.	0		0		0	0		0	0	0	0				
Total Rod Use	7,488														
CAS No.		7429-90-5	7440-47-3	18540-29-9	7440-50-8	7439-89-6	7439-96-5	7439-96-5	7439-98-7	7440-02-0	7440-21-3	7440-66-6		7440-41-7	7440-48-4
Metal	**PM10 total**	**Al**	**Cr**	**Cr+6**	**Cu**	**Fe**	**Mg**	**Mn**	**Molyb**	**Ni**	**Silicon**	**Zn**	**Titanium**	**Be**	**Co**
TAP		**X**	**X**	**X**	**X**	**X**	**X**	**X**	**X**	**X**	**X**	**X**		**X**	**X**
HAP			**X**	**X**				**X**		**X**				**X**	**X**
Table 12.19-1 and SDAPCD w/NASSCO fume correction			X	X				X		X					X
Table 12.19-2 and SDAPCD w/NASSCO fume correction			X	X				X		X					X
SDAPCD w/ GMAW/SMAW NASSCO fume correction		X	X	X	X	X	X	X	X	X	X	X	X	X	X
SDAPCD Unspecified Process		X	X	X	X	X	X	X	X	X	X	X	X	X	X
IDEQ EL Dust (lbs./hr.)	---	6.7E-01	3.3E-02	5.6E-07	6.7E-02	---	---	3.3E-01	6.7E-01	2.70E-05	6.7E-01	6.7E-01	---	2.80E-05	3.30E-03
Fume lbs/yr	4.1E+01	4.0E+01	1.8E-01	9.5E-03	1.8E-01	3.8E-01	2.4E+00	7.3E-01	1.9E-08	1.8E-02	5.0E+00	5.2E-03	1.3E-02	1.2E-04	0.0E+00
(Assume use in 4 days/week, 50 weeks/yr=200 days/yr; 24 hour average/day; (if 5 days occasionally the value would be lower)	8.52E-03	8.4E-03	3.7E-05	1.1E-06	3.8E-05	7.9E-05	5.1E-04	1.5E-04	3.9E-12	2.0E-06	1.0E-03	1.1E-06	2.7E-06	2.6E-08	0.0E+00
IDEQ EL Fume (lbs./hr.)		---	---	---	1.3E-02	3.3E-01	6.7E-01	6.7E-02	---	---	---	3.330E-01	---	---	3.3E-03

< Tap EL > TAP EL

Table 3-19 Building 8 Welding Emissions Summary

NOTES

[1]2015 Welding Wire Use amounts + Growth Factor 1.25

[2]Hobart MSDS No. 415841 and listed hazardous ingredients apply to both Hobart Quantum Arc D2 and Premier Arc 6 material compositions; Kim Wyndance, Western Trailer, via Norco Supplier. 8/29/14.

[3]Calculation Method With AP-42 Emission Factors, AP-42 Table 12.19-1, Table 12.19-2

Hobart GMAW E70S and Premier Arc 6	5.2 lbs/1000 lbs electrode			0.52% fume generation			Safety Data Sheet Composition						
TAP	Cr	Cr+6	Cobalt	Mn	Ni	Pb	Cu	Cr	Fe	Mn	Moly	Ni	Si
	0.0001%	ND	0.0001%	0.03%	0.0001%	ND	5%	ND	90%	10%	1%	ND	5
Lincoln Electric and Harris GMAW 308L, 308Lsi	5.4 lbs/1000 lbs electrode			0.54% fume generation			Safety Data Sheet Composition						
TAP	Cr	Cr+6	Cobalt	Mn	Ni	Pb	Cu	Cr	Fe	Mn	Moly	Ni	Si
	0.0524%	ND	0.0001%	0.03%	0.0184%	ND	0.75%	22%	62%	3%	1%	11%	1%
Lincoln Electric Weld Flux 781 EM12K1	0.05 lbs/1000 lbs electrode			0.01% fume generation			Safety Data Sheet Composition						
TAP	Cr	Cr+6	Cobalt	Mn	Ni	Pb	Cu	Cr	Fe	Mn	Moly	Ni	Si
	ND	ND	ND	ND	ND	ND	ND	ND	5%	10%	ND	ND	5%

[4]Calculation Method Without AP-42 Emission Factors: SDAPCD G99 Gas Metal Arc Weldging (GMAW), Unspecified Electrode, General District-ARB-NASSCO GMAW Emission Estimation Procedure.

Eh = max hourly emissions of each TAP Ea= annual emissions of each TAP

Ea= Ua X EF (fume rate rod lbs fume/lbs rod) X Nasso fume Correction Factor X Concentration metal

Eh=Uh X EF (fume rate rod lbs fume/lbs rod) X Nasso fume Correction Factor X Concentration metal

Welding Process	lbs fume/lbs rod
default fume rates GMAW, MIG, TIG	1%
default fume rates SMAW, FCAW	2%
default fume rates unspecified	5%
default fume Correction Factor GMAW, MIG, TIG	0.5464
default fume Correction Factor SMAW, FCAW	0.2865
default fume Correction Factor unspecified	1.0
default Cr+6 conversion rates GMAW, MIG, TIG	0.05
default Cr+6 conversion rates SMAW, FCAW	0.63
default Cr+6 conversion rates unspecified	0.1
default emission factor (lbs./lbs rod)	
PM10 (PM2.5)	0.01
Cr+3	0.01*0.5464*.95*CI
Cr+6	0.01*0.5464*.05*CI
Cobalt	0.01*0.5464*CI
Manganese	0.01*0.5464*CI
Nickel	0.01*0.5464*CI
Lead	0.01*0.5464*CI
Metals w/o EF	0.01*0.5464*CI

Calculation Map For Welding Wire Products

Welding Wire	Row	AP-42 Table 12.1	AP-42 Table 12.2 Cr, Cr+6, Mn, Co, Pb	Process Type	Correction
GTAW Mig/Tig ALC 4043	5 (9)	NA	NA	1% default	0.5464
GTAW Mig/Tig ALC 5356	6 (9)	NA	NA	1% default	0.5464
GMAW Mig/Tig ESAB 5356	7 (9)	NA	NA	1% default	0.5464
GMAW Mig/Tig Hobart Maxal 5356	8 (9)	NA	NA	1% default	0.5464
GMAW Hobart E70 Quantum Arc D2	12	X	X	NA	NA
GMAW Premier Arc 6	13	X	X	NA	NA
SAW Lincoln Weld L-70 and L-705	14	NA	NA	5% default	1
SAW Lincoln Weld 781 Flux	15	X	X	NA	NA
GMAW Harris HPG 308LS	19	X	X	NA	NA
GMAW Harris HPG 308L	20	X	X	NA	NA
Avesta 309L	21			1% default	0.5464
Lincoln Electric Mig 308LSi	23	X	X	NA	NA

Table 3-19 Building 10 Welding Emissions Summary

Bldg 10 Welding Material Purchases	**TAP/HAP Metal**	**Al**	**Cr**	**Cr+6**	**Cu**	**Fe**	**Mg**	**Mn**	**Molyb**	**Ni**	**Silicon**	**Zn**	**Titanium**	**Be**	**Co**
Welding Process/Electrode	CAS No.	7429-90-5	7440-47-3	18540-29-9	7440-50-8	7439-89-6	7439-96-5	7439-96-5	7439-98-7	7440-02-0	7440-21-3	7440-66-6		7440-41-7	7440-48-4
Aluminum Fillers	**Annual Use (lbs.)[1]**	**Al**	**Cr**		**Cu**	**Fe**	**Mg**	**Mn**	**Molyb**	**Ni**	**Silicon**	**Zn**	**Titanium**	**Be**	**Co**
[4]GTAW Mig/Tig ALC 4043		93%			0.3%	0.80%	0.05%	0.05%			6.0%	0.1%	0.2%	<0.0003%	
[4]GTAW Mig/Tig ALC 5356		93%	0.20%		0.1%	0.4%	5.5%	0.2%			0.25%	0.10%	0.25%	<0.0003%	
[4]GMAW Mig/Tig ESAB 5356		93%	0.20%		0.1%	0.4%	5.5%	0.2%			0.25%	0.10%	0.20%	<0.0003%	
[4]GMAW Mig/Tig Hobart Maxal 5356		99.7%	0.50%		0.50%	1%	6%	2%		0.05%	14%			<0.0003%	
Subtotal Aluminum Wire lbs.	0	-	0		0	0	-	0	0	0	0	-	0	0.000	0
Carbon Fillers	**Annual Use (lbs.)[1]**	**Al**	**Cr**		**Cu**	**Fe**	**Mg**	**Mn**	**Molyb**	**Ni**	**Silicon**	**Zn**	**Titanium**	**Be**	**Co**
[2,3]GMAW Hobart E70 Quantum Arc D2	675.00				5.0%	90.0%		10%	1.0%		5.0%				
[2,3]GMAW Premier Arc 6 0.035 and 0.45 45 lb spool	31,640.00				5.0%	90.0%		10%	1.0%		5.0%				
[4]SAW (Submerged Arc Welding) Lincoln Weld L-70 & L-705					0.5%	98.5%		0.50%	0.50%						
[3]SAW (Submerged Arc Welding) Lincoln Weld 781 Flux						5.0%		10.0%			5.0%				
Subtotal Carbons Steel Wire lbs.	32,315	-	-		1,616	29,084	-	3,232	323	-	1,616	-	-	-	-
Stainless Steel	**Annual Use (lbs.)[1]**	**Al**	**Cr**		**Cu**	**Fe**	**Mg**	**Mn**	**Molyb**	**Ni**	**Silicon**	**Zn**	**Titanium**	**Be**	**Co**
[3]GMAW (Harris) Lin. 308 Lsi 035 x 25# spool	187.50		40.0%		1.0%	60.0%		5.0%	1.0%	30.0%	1.5%				1.0%
[3]GMAW (Harris?) HPG 308LHSO 035 x 25# spool	1,218.75		40.0%			60.0%		5.0%	1.0%	13.0%	1.0%				1.0%
[4]Avesta 309L 035 x 33# spool	41.25		25.0%							12.5%			12.5%		
[4]Avesta 248 SV(308L-Si, 308L, 308H, 347-Si, 347, 316L-Si, 316L, 318-Si, 318, 317L, 307-Si, 309L, 310, 253))			30.0%		2.0%	16.0%		10.0%	5.0%	36.0%	1.0%				
[3]Lincoln Electric Mig 308LSi			40.0%		1.0%	60.0%		5.0%	1.0%	30.0%	1.5%				1.0%
[3]GMAW Harris HPG 308LSI 035 X 25#			22%		0.75%	62.00%		2.50%	0.75%	11%	1%				
Subtotal SSWire lbs.	1,447.50		0		0	0		0	0	0	0				
Total Rod Use	33,763														
CAS No.		7429-90-5	7440-47-3	18540-29-9	7440-50-8	7439-89-6	7439-96-5	7439-96-5	7439-98-7	7440-	7440-21-3	7440-66-6		7440-41-7	7440-48-4
Metal	**PM10 total**	**Al**	**Cr**	**Cr+6**	**Cu**	**Fe**	**Mg**	**Mn**	**Molyb**	**Ni**	**Silicon**	**Zn**	**Titanium**	**Be**	**Co**
TAP		**X**	**X**	**X**	**X**	**X**	**X**	**X**	**X**	**X**	**X**	**X**		**X**	**X**
HAP			**X**	**X**				**X**		**X**				**X**	**X**
Table 12.19-1 and SDAPCD w/NASSCO fume correction			X	X				X		X					X
Table 12.19-2 and SDAPCD w/NASSCO fume correction			X	X				X		X					X
SDAPCD w/ GMAW/SMAW NASSCO fume correction		X	X	X	X	X	X	X	X	X	X	X	X	X	X
SDAPCD Unspecified Process		X	X	X	X	X	X	X	X	X	X	X	X	X	X
IDEQ EL Dust (lbs./hr.)	---	6.7E-01	3.3E-02	5.6E-07	6.7E-02	---	---	3.3E-01	6.7E-01	2.70E-05	6.7E-01	6.7E-01	---	2.80E-05	3.30E-03
Fume lbs/yr	1.6E+01	0.0E+00	7.2E-01	2.8E-03	0.0E+00	2.3E-01	0.0E+00	1.1E+01	3.9E-03	2.8E-01	3.9E-03	0.0E+00	2.8E-02	0.0E+00	3.4E-02
(Assume use in 4 days/week, 50 weeks/yr=200 days/yr; 24 hour average/day; (if 5 days occasionally the value would be lower)	3.28E-03	0.0E+00	1.5E-04	3.2E-07	0.0E+00	4.8E-05	0.0E+00	2.2E-03	8.1E-07	3.3E-05	8.1E-07	0.0E+00	5.9E-06	0.0E+00	7.0E-06
IDEQ EL Fume (lbs./hr.)		---	---	---	1.3E-02	3.3E-01	6.7E-01	6.7E-02	---	---	---	3.330E-01	---	---	3.3E-03
		< TAP EL	> TAP EL												

Table 3-19 Building 10 Welding Emissions Summary

NOTES

[1]2015 Welding Wire Use amounts + Growth Factor 125%

[2]Hobart MSDS No. 415841 and listed hazardous ingredients apply to both Hobart Quantum Arc D2 and Premier Arc 6 material compositions; Kim Wyndance, Western Trailer, via Norco Supplier. 8/29/14.

[3]Calculation Method With AP-42 Emission Factors, AP-42 Table 12.19-1, Table 12.19-2

Hobart GMAW E70S and Premier Arc 6	5.2 lbs/1000 lbs electrode			0.52% fume generation			Safety Data Sheet Composition						
TAP	Cr	Cr+6	Cobalt	Mn	Ni	Pb	Cu	Cr	Fe	Mn	Moly	Ni	Si
	0.0001%	ND	0.0001%	0.03%	0.0001%	ND	5%	ND	90%	10%	1%	ND	5
Lincoln Electric and Harris GMAW 308L, 308Lsi	5.4	lbs/1000 lbs electrode		0.54% fume generation			Safety Data Sheet Composition						
TAP	Cr	Cr+6	Cobalt	Mn	Ni	Pb	Cu	Cr	Fe	Mn	Moly	Ni	Si
	0.0524%	ND	0.0001%	0.03%	0.0184%	ND	0.75%	22%	62%	3%	1%	11%	1%
Lincoln Electric Weld Flux 781 EM12K1	0.05 lbs/1000 lbs electrode			0.01% fume generation			Safety Data Sheet Composition						
TAP	Cr	Cr+6	Cobalt	Mn	Ni	Pb	Cu	Cr	Fe	Mn	Moly	Ni	Si
	ND	ND	ND	ND	ND	ND	ND	ND	5%	10%	ND	ND	5%

[4]Calculation Method Without AP-42 Emission Factors: SDAPCD G99 Gas Metal Arc Weldging (GMAW), Unspecified Electrode, General District-ARB-NASSCO GMAW Emission Estimation Procedure.

Eh = max hourly emissions of each TAP Ea= annual emissions of each TAP

Ea= Ua X EF (fume rate rod lbs fume/lbs rod) X Nasso fume Correction Factor X Concentration metal

Eh=Uh X EF (fume rate rod lbs fume/lbs rod) X Nasso fume Correction Factor X Concentration metal

Welding Process	lbs fume/lbs rod
default fume rates GMAW, MIG, TIG	1%
default fume rates SMAW, FCAW	2%
default fume rates unspecified	5%
default fume Correction Factor GMAW, MIG, TIG	0.5464
default fume Correction Factor SMAW, FCAW	0.2865
default fume Correction Factor unspecified	1.0
default Cr+6 conversion rates GMAW, MIG, TIG	0.05
default Cr+6 conversion rates SMAW, FCAW	0.63
default Cr+6 conversion rates unspecified	0.1
default emission factor (lbs./lbs rod)	
PM10 (PM2.5)	0.01
Cr+3	0.01*0.5464*.95*CI
Cr+6	0.01*0.5464*.05*CI
Cobalt	0.01*0.5464*CI
Manganese	0.01*0.5464*CI
Nickel	0.01*0.5464*CI
Lead	0.01*0.5464*CI
Metals w/o EF	0.01*0.5464*CI

Calculation Map For Welding Wire Products

Welding Wire	Row	AP-42 Table 12.1	AP-42 Table 12.2 Cr, Cr+6, Mn, Co, Pb	Process Type	Correction
GTAW Mig/Tig ALC 4043	5 (9)	NA	NA	1% default	0.5464
GTAW Mig/Tig ALC 5356	6 (9)	NA	NA	1% default	0.5464
GMAW Mig/Tig ESAB 5356	7 (9)	NA	NA	1% default	0.5464
GMAW Mig/Tig Hobart Maxal 5356	8 (9)	NA	NA	1% default	0.5464
GMAW Hobart E70 Quantum Arc D2	12	X	X	NA	NA
GMAW Premier Arc 6	13	X	X	NA	NA
SAW Lincoln Weld L-70 and L-705	14	NA	NA	5% default	1
SAW Lincoln Weld 781 Flux	15	X	X	NA	NA
GMAW Harris HPG 308LS	19	X	X	NA	NA
GMAW Harris HPG 308L	20	X	X	NA	NA
Avesta 309L	21			1% default	0.5464
Lincoln Electric Mig 308LSi	23	X	X	NA	NA

3.5 Metal Cutting

Metal cutting is performed on automated routers at Building 1 and a saw at Building 10, primarily on aluminum. Operations are dry and emissions are controlled by a Torit Cyclone 20-5 with filter bags. Specifications for the Torit 20-5 filters are included in Appendix A.

3.5.1 Metal Cutting MultiCam and Komo Routers Building 1 – R1 and R2

Metal cutting at Building 1 is performed on two automated router machines, a MultiCam and a Komo. The MultiCam discharges emissions to a Torit located outside the Building. The Komo discharges emissions to a Torit 20-5 located inside the Building. The descriptions of the equipment provided by the manufacturers are included in Appendix A.

3.5.2 Metal Cutting Saw Building 10 – S1

Metal cutting at Building 10 is performed on a saw manufactured by SOCO. The saw discharges emissions to a Torit 20-5 located outside the Building. The descriptions of the equipment provided by the manufacturers included in Appendix A.

3.5.3 Amount of Aluminum Cut

Cutting patterns, including the width and length of cuts, vary widely. The minimum kerf width is typically .187 inches and the maximum is typically 0.5 inches. Material thickness is commonly .187 inches to .25 inches. For the purpose of estimating amount of material cut, the maximum kerf and material thickness are used.

Production studies were performed in April and May 2015 to estimate the maximum amount of material cut. On April 27, 2015, in 10 hours an average of 641 inches per hour were cut at various thicknesses and kerf sizes on the Komo. This estimated to be equivalent to approximately 360 inches at a uniform 0.25 inch kerf on 0.25 inch thick material. On May 14, 2015, in 10 hours an average of 660 inches per hour were cut at various thicknesses and kerf sizes on the Multicam.

Metal cutting emissions accumulate on the table and floor around the machine. A study of the fraction of large particle metals chips generated during cutting was performed on the Komo on September 25, 2015. Approximately one pound of material was cut and large chips collected. The length of material cut was measured and the cut weight calculated to be .95lbs (431 grams). The amount of metal chips and scrap was collected and subtracted from the total. 0.912 grams was either not collected or turned into fine particles. Based on 0.912 grams not collected of the 431 grams of cuttings, 99.98% were collected as large chips and approximately 0.02% of the cuttings

were not collected or emitted as fine particles. Consequently, the very conservative estimate of 5% of the metal cuttings is fine particulate is applied. The amount of fine particulate matter generated at the Multicam router in Building 1 is assumed to be similar to the Komo.

For the purposes of estimating maximum amount of material cut at the Multicam and Komo routers, 660 inches per hour was increased 20% to 792 inches per hour for each machine, totaling 1,584 inches per hour. Assuming a material density of 0.1 lbs./in3, typical kerf size 0.25 inches, maximum material thickness 0.25 inches, and 792 inches per hour, 4.95 lbs./hr. of cuttings are generated. Assuming 5% of the cuttings are generated as fine particulate, the 24-hour average cutting is calculated as follows:

(4.95 lbs. cuttings/hr.) * 5% fine particulate * 20 hours production/day / 24 hour-average per day = 0.21 lbs./hr. $PM_{10/2.5}$.

The Torit bag filters are specified as 99.9% efficient for $PM_{2.5}$. The estimated emissions are calculated as follows:
0.21 lbs./hr. $PM_{10/2.5}$ * (100%-99.9%) = 0.002 lbs./hr. $PM_{10/2.5}$ emitted.

The annual emissions are calculated as follows:
(4.95 lbs./hr.) * 5% * 20 hours production/day = 4.95 lbs./day $PM_{10/2.5}$
4.95 lbs./day $PM_{10/2.5}$ * 4 days/week * 52 weeks/yr. / (2000 lbs./ton)=
= 0.515 tons $PM_{10/2.5}$ generated/year
0.515 tons $PM_{10/2.5}$ generated/yr. * (100%-99.9%) = 0.0005 tons/yr. $PM_{10/2.5}$ emitted.

Emissions of Aluminum (585) TAP are less than the screening emission levels[20]. Since the estimated amounts of $PM_{10/2.5}$ and aluminum emitted hourly and annually are so low, no metal cutting limits are proposed. Emission calculations and estimates are shown in Table 3-21.

For the purposes of conservatively estimating maximum amount of material cut at the SOCO saw, the amount of aluminum cuttings reported for 2014 (289 lbs.) was increased 50% (433 lbs.). Since the fraction of fine particulate generated at the aluminum saw is anticipated to be less than the amount generated at the routers, based on the Komo cutting study, 5% of the cuttings are conservatively assumed to be generated as fine particulate. The 24-hour average cutting is calculated as follows:

Cuttings estimated 433 lbs./year @ 5 days/week, 50 weeks/yr., 24 hr.-average
lbs. cuttings/hr. = (433 lbs. cuttings/yr.) / (5 days/week * 50 week/yr.* 24)
= 0.07 lbs. cuttings/hr.

[20] IDAPA 58.01.01.585 and 586.

tons cuttings/yr. = (lbs aluminum cut/yr.) /(2000 lbs./ton)
= (433) / (2000 lbs./ton) = 0.22 ton cuttings/yr.

$PM_{10/2.5}$ lbs./hr. emitted =
= lbs. aluminum cuttings/hr. * fraction <10 microns * (100%-control filter efficiency%)
= (0.07 lbs./hr.) * (5%) * (0.001) = 0.0000035 lbs./hr. controlled $PM_{10/2.5}$

$PM_{10/2.5}$ tons/yr. emitted =
= tons aluminum cut/yr * fraction <10 microns * (100%-control filter efficiency%)
= (0.22 tons/yr) * (5%) * (0.001) = 0.00001 tons/yr. controlled $PM_{10/2.5}$

Emissions of Aluminum (585) TAP are less than the screening emission levels[21]. Since the estimated amounts of $PM_{10/2.5}$ and aluminum emitted hourly and annually are so low, no metal cutting limits are proposed. Emission calculations and estimates are shown in Table 3-22.

[21] IDAPA 58.01.01.585 and 586.

Table 3-21: Building 1 Router Emissions

Bldg 1	Router 1 Multicam discharges Al cuttings to exterior Torit-cyclone-bag control[3]							660 in/hr[3]		660*1.2=792	4 day/week, 20 hrs/day;		52 weeks/year	
	Router 2 Komo discharges Al cuttings to interior Torit-cyclone-bag control[4]							660 in/hr[4]		660*1.2=792	4 day/week, 20 hrs/day;		52 weeks/year	
	(length is total material Router 1 and 2)							1320 in/hr		1584				
Source	Material Name	density (lbs/in3)	operating hours	kerf (in)[1]	thickness (in)[1]	length (in)	lbs/hr	length/day (in/day)	lbs/day	lbs/day 24-hr average	lbs/week			
Multicam	Aluminum	0.1	1	0.25	0.25	792	4.95	15840	99	4.125	396			
Komo	Aluminum	0.1	1	0.25	0.25	792	4.95	15840	99	4.125	396			

Multicam Criteria Air Pollutants	Maximum Cutting Rate		Fraction <10 microns[5]	Potential to Emit		Cyclone and Bag Filter Efficiency[2]	Controlled Emissions		Modeling Threshold	Level I Modeling Required?	Modeling Threshold	Level II Modeling Required?	Level II Screening Level	% Level II Screening Level
	lb/hr	ton/yr	%	lb/hr (24-hr avg)	ton/yr	%	lb/hr	ton/yr	General		Case-by-Case			
PM_{10}	4.95	10.30	5%	0.21	0.51	99.90%	0.0002	0.0005	0.22 lb/hr	No	2.6 lb/hr	No	0%	0%
$PM_{2.5}$	4.95	10.30	5%	0.21	0.51	99.90%	0.0002	0.0005	0.054 lb/hr	No	0.63 lb/hr	No	0%	0%
									0.35 T/yr	No	4.1 T/yr	No	0%	0%

Komo Criteria Air Pollutants	Maximum Cutting Rate		Fraction <10 microns[5]	Potential to Emit		Cyclone and Bag Filter Efficiency[2]	Controlled Emissions		Modeling Threshold	Modeling Required?	Modeling Threshold	Modeling Required?	Level II Screening Level	% Level II Screening Level
	lb/hr	ton/yr	%	lb/hr (24-hr avg)	ton/yr	%	lb/hr	ton/yr	General		Case-by-Case			
PM_{10}	4.95	10.30	5%	0.21	0.51	99.90%	0.0002	0.0005	0.22 lb/hr	No	2.6 lb/hr	No	0%	0%
$PM_{2.5}$	4.95	10.30	5%	0.21	0.51	99.90%	0.0002	0.0005	0.054 lb/hr	No	0.63 lb/hr	No	0%	0%
									0.35 T/yr	No	4.1 T/yr	No	0%	0%

Uncontrolled Aluminum Emissions lbs./hr. = 0.21 Aluminum TAP EL = 0.667 lbs./hr.
Controlled Aluminum Emissions lbs./hr. = 0.00

Notes
[1] Email Tom Hogan, 4/13/15: minimum kerf width we would be seeing is .187", it could often go up to .5". Material thickness would commonly be .187" to .25".
[2] Torit Cyclone 20-5 with filter bags; Minimum efficiency 99.9% for >2 micron filter partially loaded, 99.99 for >10 microns
[3] Tom Hogan, Production Study: 10 hours: MultiCam 659 inch/hr, email 5/14/15.
Tom Hogan, Production Study 2 hours: Komo 1620 inch/hr, email 4/21/15.
[4] Tom Hogan, Production Study 10 hours: Komo 641 inch/hr, email 4/27/15.
[5] Tom Hogan, 9/25/15, Komo 1 lb cutting study; calculated cut weight was .95lbs (430.912 grams), the weight of collected chips was 430 grams.
0.912 grams was either not collected or turned into particles. That equals 2 tenths of a percent or at least 99.98% are large chips. 95% is applied.

Example Calculation Method

Estimate amount of aluminum cuttings and emissions from Mutlicam:
kerf (inches) * thickness (inches) * legth (inches)/hr = cubic inches cut/hr
0.25 * 0.25 * 792 inches/hr cuttings = 49.5 in^3 cuttings/hr
cubic inches * density aluninum (0.1 lbs./cubic inch) = lbs aluminum cut/hr
49.5 * 0.1 = 4.95 lbs/hr
(lbs aluminum cut/hr) * (hrs/day) * (days/week) * (week/yr) /(2000 lbs/ton) = tons/yr aluminum cuttings
(4.95 lbs/hr) * (20 hrs/day) * (4 days/week) * (52 week/yr) / (2000 lbs./ton) = 10.3 ton/yr
lbs aluminum cut/hr * fraction <10 microns * control filter efficiency = lbs/hr controlled $PM_{10/2.5}$ emissions
(4.95 lbs/hr) * (100% <10 microns) * (0.999 control efficiency = 0.0050 lbs/hr controlled $PM_{10/2.5}$ emissions
tons aluminum cut/yr * fraction <10 microns * control filter efficiency = tons aluminum/yr controlled $PM_{10/2.5}$ emissions
(10.3 tons/yr) * (100% <10 microns) * (0.999 control efficiency = 0.0103 tons/yr controlled $PM_{10/2.5}$ emissions

Table 3-22: Building 10 Saw Emissions

Bldg 10 Saw discharges Al cuttings to exterior Torit-cyclone-bag control
SOCO Model MC-260N/FA

[1] Al cuttings in 2014+50% = 432.81 5 day/week, two 8-hr shifts, 2nd shift has 50% of 1st shift; 50 weeks/year
convert yearly weight to hourly weight (24-hour average), 250 days/year (433 lbs/year)*(1 year/50 weeks)*(1 week/5 days)*(24 hrs/day)
0.07 lbs/hr cuttings (24-hr. average)

Criteria Air Pollutants	Maximum Cutting Rate		Fraction <10 microns[3]	Potential to Emit		Cyclone and Bag Filter Efficiency[2]	Controlled Emissions		Modeling Threshold	Modeling Required ?	Modeling Threshold	Modeling Required?	Level I Screening Level	% Level II Screening Level
	lb/hr (24-hr avg)	ton/yr	%	lb/hr (24-hr avg)	ton/yr	%	lb/hr	ton/yr	General		Case-by-Case			
PM_{10}	0.07	0.22	5%	0.004	0.01	99.9%	0.0000036	0.00001	0.22 lb/hr	No	2.6 lb/hr	No	0%	0%
$PM_{2.5}$	0.07	0.22	5%	0.004	0.01	99.9%	0.0000036	0.00001	0.054 lb/hr	No	0.63 lb/hr	No	0%	0%
									0.35 T/yr	No	4.1 T/yr	No	0%	0%

Uncontrolled Aluminum Emissions lbs./hr. = 0.004 Aluminum TAP EL = 0.667 lbs./hr.
Controlled Aluminum Emissions lbs./hr. = 0.000004

Notes
[1] Tom Hogan, Production Study CJ Saw emissions, 289 lbs/yr, email 4/24 and 4/27/15.
[2] Torit Cyclone 20-25 with filter bags; Minimum efficiency 99.9% for >2 micron filter partially loaded, 99.99 for >10 microns
[3] Tom Hogan, 9/25/15, Komo (surrogate for small router) 1 lb cutting study; calculated cut weight was .95lbs (430.912 grams), the weight of collected chips was 430 grams.
0.912 grams was either not collected or turned into particles. That equals 2 tenths of a percent or at least 99.98% are large chips. 95% is applied.

Example Calculation Method

Estimate amount of aluminum cuttings and emissions:
Cuttings estimated 433 lbs/year @ 5 days/week, 50 weeks/yr, 24 hr-average
433 lbsyr / (5 days/week * 50 week/yr* 24) = 0.07 lbs cuttings/hr
(lbs aluminum cut/yr) /(2000 lbs/ton) = tons/yr aluminum cuttings
(433) / (2000 lbs./ton) = 0.22 ton/yr
lbs aluminum cut/hr * fraction <10 microns * (100%-control filter efficiency%) = lbs/hr controlled $PM_{10/2.5}$ emissions
(0.07 lbs/hr) * (5% <10 microns) * (0.001) = 0.0000035 lbs/hr controlled $PM_{10/2.5}$ emissions
tons aluminum cut/yr * fraction <10 microns * (100%-control filter efficiency%) = tons aluminum/yr controlled $PM_{10/2.5}$ emissions
(0.22 tons/yr) * (5% <10 microns) * (0.001) = 0.00001 tons/yr controlled $PM_{10/2.5}$ emissions

3.6 Deburring – D1

Surface burrs and edge imperfections are removed from steel using two Costa MD4CVC1150 machines. Operations are dry and emissions are controlled by a Donaldson Torritt Downflow II DFT 3-18 filter unit located outside the building. Specifications for the Downflow II DFT 3-18are included in Appendix B.

Emissions of PM_{10} and $PM_{2.5}$ are estimated using the steel finishing factor for PM_{10} published by the EPA Technology Transfer Clearinghouse, 4.5E-3 lbs per tons metal processed.[22] Emission calculations and estimates are shown in Table 3-23.

[22] EPA Technology Transfer Clearinghouse, Emission Factor Details, SCC 30400715, Steel Foundries, Finishing, PM10 filterable, Uncontrolled, 4.5E-3 lbs per tons metal processed.

Table 3-23: Building 1 Deburring Emissions

Bldg 1	Costas Debur Machines	lbs./day
	Average	3000
	Growth	300%
	PTE Max	9000

Criteria Air Pollutants	**Material Processing Rate**		**Emission Factor .0045 lbs./ton 2.25E-6 lbs./lbs. metal**[1]	**Potential to Emit**		**Cyclone and Bag Filter Efficiency**[2]	**Controlled Emissions**		**Modeling Threshold**	**Modeling Required?**	**Modeling Threshold**	**Modeling Required?**	**Level I Screening Level**	**% Level II Screening Level**
	lb/hr	**ton/yr**		**lb/hr (24-hr avg)**	**ton/yr**	**%**	**lb/hr**	**ton/yr**	**General**		**Case-by-Case**			
PM_{10}	375.00	1404.00	2.25E-06	0.000844	0.00316	99%	0.000008	0.00003	0.22 lb/hr	No	2.6 lb/hr	No	0%	0%
$PM_{2.5}$	375.00	1404.00	2.25E-06	0.0008	0.003	99%	0.000008	0.00003	0.054 lb/hr	No	0.63 lb/hr	No	0%	0%
									0.35 T/yr	No	4.1 T/yr	No	0%	0%

Notes

[1] EPA Technology Transfer Clearinghouse, Emission Factor Details, SCC 30400715, Steel Foundries, Finishing, PM10 filterable, Uncontrolled, 4.5E-3 lbs per tons metal processed.

[2] Blue Haven Technologies Test Report, Donaldson Ultra Web DFO Filter, June 24, 2014.

Example Calculation Method

Estimate amount of aluminum cuttings and emissions:

Cuttings estimated 303 lbs/year @ 16 hrs/day, 5 days/week, 50 weeks/yr

303 lbsyr / (16 hrs/day * 5 days/week * 50 week/yr) = 0.08 lbs cuttings/hr

(lbs aluminum cut/hr) * (hrs/day) * (days/week) * (week/yr) /(2000 lbs/ton) = tons/yr aluminum cuttings

(0.08 lbs/hr) * (16 hrs/day) * (5 days/week) * (50 week/yr) / (2000 lbs./ton) = 0.15 ton/yr

lbs aluminum cut/hr * fraction <10 microns * control filter efficiency = lbs/hr controlled $PM_{10/2.5}$ emissions

(0.08 lbs/hr) * (100% <10 microns) * (0.999 control efficiency = 0.000076 lbs/hr controlled $PM_{10/2.5}$ emissions

tons aluminum cut/yr * fraction <10 microns * control filter efficiency = tons aluminum/yr controlled $PM_{10/2.5}$ emissions

(0.15 tons/yr) * (100% <10 microns) * (0.999 control efficiency = 0.0001 tons/yr controlled $PM_{10/2.5}$ emissions

4. SPRAY PAINT BOOTH – FORM EU3 DOCUMENTATION

Paint is sprayed on metal in a totally enclosed spray booth inside the east-side of the Paint Booth Building. Approximately seven truck trailers are painted each operating day. The make-up air heater for the Paint Booth (MAU-3) is specified in Section 3.2, above. Two Graco G-40 air assisted aireless spray guns are used to apply primer and two Graco Pro XP electrostatic guns are used to apply finish paint. Estimates of Graco G40 air-assisted spray gun and electrostatic efficiencies are 85%, according to Graco.[23] Specifications for the spray guns are provided in Appendix A.

The booth is a side-draft style with 6 exhaust fans and 2 banks of exhaust filters. Clean air is drawn in through ATI 600 filters in the top of the booth and exhausted out the filters at the Ultra II/Ultra filters at the sides of the booth. Exhaust filters include (12) 20”x20” Ultra II filters, rated 99.7% efficient, with a layer of (6) 28” x 218” Ultra blanket filters, rated 99.6% efficient, on top. The overall control efficiency rating is calculated as 99.9988% (100%-(100%*(1-0.997)*(1-0.996)). For the purpose of conservatively estimating emissions, the overall control efficiency is assumed to be 99.9%. The blanket filters are replaced approximately every other day. In addition to emissions from these coating activities, airflow through the filters and ithe exhaust stacks carries the combustion emissions from MAU3.

A drying room occupies the remainder of the east-side of the Paint Booth Building. The heat for drying is provided by electrically powered infra-red heaters. The make-up air heater for the Drying Room (MAU-1) is specified in Section 3.1, above.

A wash room occupies the west-side of the Paint Booth Building. The make-up air heater for the Drying Room (MAU-2) is specified in Section 3.1, above.

<u>Coating Usage</u>
Western Trailer applies several paints. Specific materials, maximum potential monthly use amounts, and physical and chemical characteristics are listed in Table 4-1. Safety Data Sheets (SDS) showing the physical and chemical characteristics of the coating materials are included in Appendix B.

<u>Estimated Maximum Coating Emissions</u>
Estimated maximum daily material use amounts are provided by Western Trailer. Estimated maximum annual use amounts are calculated based on maximum daily use, 4 days/week, and a conservative estimate of 52 weeks/year. The actual number of operating weeks each year is approximately 50.

[23] Email transmittal Scott Edmonson, Advanced Finishing Systems, to Tom Hogan, Western Trailer, (Graco) Transfer Efficiency Measurement, August 24, 2016, undated chart, copy included in Appendix A.

Volatile emissions are assumed to be completely emitted. As described above, uncontrolled non-volatile emissions are estimated using a transfer efficiency of 85%. Particulate content in the coatings is estimated by multiplying the maximum solids content of the coatings as provided on the SDS by the coating usage rate. All particulate is conservatively assumed to have a diameter equal to or less than 2.5 microns ($PM_{2.5}$). As described above, controlled emissions of particulates are estimated using a filter efficiency of 99.99%. Non-volatile TAP constituent (carbon black) emissions are estimated using the 85% transfer efficiency and 99.99% filter efficiency.

Estimated use of coatings and associated particulates, VOCs, TAPs and HAPs are shown in Table 4-1. Example calculations for coatings and associated particulates, VOCs, TAPs and HAPs are shown are shown below.

Maximum potential coating particulate and TAP/HAP constituents are calculated as follows:
Max Hourly (24-hour average) PM/TAP/HAP =
= (gal./day) * (density) * (wt.% solids/TAP/HAP) / (24 hrs./day)

Example Max Hourly for acetone in 998 Accelerator:
= 0.30 gal. 998 Accelerator /day * 7.99 lbs./gal. density * 25 wt.% acetone in 998 Accelerator / 24
= 0.02 lb/hr acetone in 998 Accelerator

Max 12-month tons/year PM/HAP/TAP =
= (gal./yr.) * (density) * (wt.% solids/TAP/HAP) / (2000 lbs./ton)
gal./yr. = gal./day * 4 * 52

Example Max annual for acetone in 998 Accelerator:
62 gal. 998 Accelerator /yr. * 7.99 lbs./gal. density * 25 wt.% solids / (2000 pounds/ton) =
= 0.06 tons acetone/yr.

Estimated emission of coating particulates, VOCs, TAPs and HAPs are shown in Table 4-2. Example calculations are shown below.

Maximum potential coating PM emissions are calculated as follows:
Max. hourly or tons/year * (100%-spray retention rate%)
* (100%-filter efficiency%) = controlled lbs./hr. or tons/year

Example PM_{10} lbs./hr. calculation:
maximum total paint solids 20.97 lbs./hr. * (100%-85%) * (100-99.99%) = 0.00031 lbs. PM_{10}/hr.

Example PM_{10} ton/year calculation:
maximum total paint solids 52.35 tons./yr. * (100%-85%) * (100%-99.99%) = 0.00079 tons PM_{10}/year

Maximum potential coating controlled non volatile TAP and HAP emissions are calculated as follows:
Max. hourly or yearly spray rate lbs./hr. or tons/year * (100%-spray retention rate%) * (100%-filter efficiency %) =
= uncontrolled lbs./hr. or tons/year

Example Max Hourly for carbon black in UTE 350 RM 99U Black
maximum total carbon black 0.13 lbs./hr. * (100%-85%) * (100%-99.9988%) =
= 0.00000039 lbs. carbon black/hr.

Maximum potential coating volatile TAP and HAP emissions are calculated as follows:
Max. hourly spray rate lbs./hr. or yearly spray rate tons/yr. = uncontrolled lbs. per hr. or tons/year

Example Max hourly or Max yearly ethylbenzene for ethylbenzene in LV260 Primer, LV260 Epoxy Primer Hardener Fast and UTE 350 RM 99U Black:

Max Hourly (24-hour average) ethylbenzene in LV260 Primer, LV260 Epoxy Primer Hardener Fast, and UTE 350 RM 99U Black and Max 12-month tons/year ethylbenzene in LV260 Primer, LV260 Epoxy Primer Hardener Fast, and UTE 350 RM 99U Black from above.

maximum total ethylbenzene in LV260 Primer lbs./hr. = 0.11 lbs. ethylbenzene /hr.
maximum total ethylbenzene in LV260 Epoxy Primer Hardener Fast lbs./hr.
=0.09 lbs. ethylbenzene/hr.
maximum total ethylbenzene in UTE 350 RM 99U Black = 0.13 lbs. ethylbenzene /hr.
Max hourly ethylbenzene =
=0.11 lbs. ethylbenzene /hr. + 0.09 lbs. ethylbenzene /hr. + 0.13 lbs. ethylbenzene /hr.
=0.33 lbs. ethylbenzene /hr.

maximum total ethylbenzene in LV260 Primer tons/yr. = 0.28 tons ethylbenzene /yr.
maximum total ethylbenzene in LV260 Epoxy Primer Hardener Fast tons/yr. =
= 0.24 tons ethylbenzene /yr.
maximum total ethylbenzene in UTE 350 RM 99U Black tons/yr. = 0.33 tons ethylbenzene /yr.

Max annual ethylbenzene =
=0.28 tons ethylbenzene /yr.+ 0.24 tons ethylbenzene /yr.+ 0.33 tons ethylbenzene /yr.
=0.84 lbs. tons ethylbenzene /yr.

Western Trailer

Table 4-1: Coating Use and Coating Constituent Amounts

PTE Daily Use (gal/day) @4days* 52weeks =208 days/year	PTE Annual Use (gal./year)	Manufacturer	Coating Material (See Notes)	Density	Solids	VOC (non-exempt)	Acetone	1-Butanol	MEK	Methyl acetate	1,2,4-Trimethylbenzene	Cumene	Ethylbenzene	1-Methoxy-2-propanol	Methyl Isobutyl Ketone	1-Methoxy-2-Propanol Acetate	1,3,5-Trimethylbenzene	Toluene	Methyl isoamyl ketone
							67-64-1	71-36-3	78-93-3	79-20-9	95-63-6	98-82-8	100-41-4	107-98-2	108-10-1	108-65-6	108-67-8	108-88-3	110-12-3
				lbs./gal.	Weight Percentage Content Data														
18.00	3744	Akzo Nobel	LV260 Primer	14.81	78.9%	21.1%				5.0%			1.0%	10.0%					
6.00	1248	Akzo Nobel	LV260 Epoxy Primer Hardener Fast	7.55	26.5%	73.5%		35.0%			10.0%	5.0%	5.0%				5.0%		
3.00	624	Akzo Nobel	Reducer LV260-Slow	7.26	0.0%	100.0%													
0.25	52	Akzo Nobel	SRA Strong Reducer	7.59	0.0%	100.0%										45.0%		25.0%	
14.00	2912	Akzo Nobel	UTE Tint Composite	8.68	64.3%	35.7%					5.0%					10.0%			
18.00	3744	Akzo Nobel	UTE 350 Binder	7.83	45.8%	48.0%													
4.00	832	Akzo Nobel	UTE 99 Reducer	7.57	15.46	84.5%													15.0%
10.50	2184	Akzo Nobel	UTE 280/350 Hardener	10.26	57.3%	0.0%													
0.30	62	Akzo Nobel	998 Accelerator	7.99	30.6%	69.4%	25.0%												35.0%
7.50	1560	Akzo Nobel	UTE 350 RM 99U Black	8.38	56.7%	43.3%	5.0%						5.0%		5.0%	5.0%			
2.50	520	Akzo Nobel	UTE 280/350 Hardener-Topcoat	10.26	57.3%	0.0%													
0.06	12	Akzo Nobel	UTE R200 Reducer	7.14	0.0%	100.0%			25.0%										
84.1	17494.9																		
Component Characteristics			If volatile, enter "1" ==>			1	1	1	1	1	1	1	1	1	1	1	1	1	1

	Maker	Coating Material	Density	Solids	VOC (non-exempt)	Acetone	1-Butanol	MEK	Methyl acetate	1,2,4-Trimethylbenzene	Cumene	Ethylbenzene	1-Methoxy-2-propanol	Methyl Isobutyl Ketone	1-Methoxy-2-Propanol Acetate	1,3,5-Trimethylbenzene	Toluene	Methyl isoamyl ketone
			lbs./gal.	lbs./hr.														
Hourly Spray Calculations (lbs./hr.) (Based on 24-hr averaging period, see sample calc below)	Akzo Nobel	LV260 Primer	14.81	8.76	2.35	0.00	0.00	0.00	0.56	0.00	0.00	0.11	1.11	0.00	0.00	0.00	0.00	0.00
	Akzo Nobel	LV260 Epoxy Primer Hardener Fast	7.55	0.50	1.39	0.00	0.66	0.00	0.00	0.19	0.09	0.09	0.00	0.00	0.00	0.09	0.00	0.00
	Akzo Nobel	Reducer LV260-Slow	7.26	0.00	0.91	0.00	0.00	0.00	0.00	0.00	0.00	0.00	0.00	0.00	0.00	0.00	0.00	0.00
	Akzo Nobel	SRA Strong Reducer	7.59	0.00	0.08	0.00	0.00	0.00	0.00	0.00	0.00	0.00	0.00	0.00	0.04	0.00	0.02	0.00
	Akzo Nobel	UTE Tint Composite	8.68	3.25	1.81	0.00	0.00	0.00	0.00	0.25	0.00	0.00	0.00	0.00	0.51	0.00	0.00	0.00
	Akzo Nobel	UTE 350 Binder	7.83	2.69	2.82	0.00	0.00	0.00	0.00	0.00	0.00	0.00	0.00	0.00	0.00	0.00	0.00	0.00
	Akzo Nobel	UTE 99 Reducer	7.57	1.07	1.07	0.00	0.00	0.00	0.00	0.00	0.00	0.00	0.00	0.00	0.00	0.00	0.00	0.19
	Akzo Nobel	UTE 280/350 Hardener	10.26	2.57	0.00	0.00	0.00	0.00	0.00	0.00	0.00	0.00	0.00	0.00	0.00	0.00	0.00	0.00
	Akzo Nobel	998 Accelerator	7.99	0.03	0.07	0.02	0.00	0.00	0.00	0.00	0.00	0.00	0.00	0.00	0.00	0.00	0.00	0.03
	Akzo Nobel	UTE 350 RM 99U Black	8.38	1.49	1.13	0.13	0.00	0.00	0.00	0.00	0.00	0.13	0.00	0.13	0.13	0.00	0.00	0.00
	Akzo Nobel	UTE 280/350 Hardener-Topcoat	10.26	0.61	0.00	0.00	0.00	0.00	0.00	0.00	0.00	0.00	0.00	0.00	0.00	0.00	0.00	0.00
	Akzo Nobel	UTE R200 Reducer	7.14	0.00	0.02	0.00	0.00	0.00	0.00	0.00	0.00	0.00	0.00	0.00	0.00	0.00	0.00	0.00
		Spray Total (lb/hr)		20.973	11.635	0.156	0.661	0.004	0.555	0.442	0.094	0.336	1.111	0.131	0.673	0.094	0.020	0.224
				12.21														

	Maker	Coating Material	Density	Solids	VOC (non-exempt)	Acetone	1-Butanol	MEK	Methyl acetate	1,2,4-Trimethylbenzene	Cumene	Ethylbenzene	1-Methoxy-2-propanol	Methyl Isobutyl Ketone	1-Methoxy-2-Propanol Acetate	1,3,5-Trimethylbenzene	Toluene	Methyl isoamyl ketone
			lbs./gal.	tons/yr.														
Annual Spray Calculations (tons/yr.) (See sample calc below)	Akzo Nobel	LV260 Primer	14.81	21.87	5.86	0.00	0.00	0.00	1.39	0.00	0.00	0.28	2.77	0.00	0.00	0.00	0.00	0.00
	Akzo Nobel	LV260 Epoxy Primer Hardener Fast	7.55	1.25	3.46	0.00	1.65	0.00	0.00	0.47	0.24	0.24	0.00	0.00	0.00	0.24	0.00	0.00
	Akzo Nobel	Reducer LV260-Slow	7.26	0.00	2.27	0.00	0.00	0.00	0.00	0.00	0.00	0.00	0.00	0.00	0.00	0.00	0.00	0.00
	Akzo Nobel	SRA Strong Reducer	7.59	0.00	0.20	0.00	0.00	0.00	0.00	0.00	0.00	0.00	0.00	0.00	0.09	0.00	0.05	0.00
	Akzo Nobel	UTE Tint Composite	8.68	8.12	4.52	0.00	0.00	0.00	0.00	0.63	0.00	0.00	0.00	0.00	1.26	0.00	0.00	0.00
	Akzo Nobel	UTE 350 Binder	7.83	6.72	7.04	0.00	0.00	0.00	0.00	0.00	0.00	0.00	0.00	0.00	0.00	0.00	0.00	0.00
	Akzo Nobel	UTE 99 Reducer	7.57	2.66	2.66	0.00	0.00	0.00	0.00	0.00	0.00	0.00	0.00	0.00	0.00	0.00	0.00	0.47
	Akzo Nobel	UTE 280/350 Hardener	10.26	6.42	0.00	0.00	0.00	0.00	0.00	0.00	0.00	0.00	0.00	0.00	0.00	0.00	0.00	0.00
	Akzo Nobel	998 Accelerator	7.99	0.08	0.17	0.06	0.00	0.00	0.00	0.00	0.00	0.00	0.00	0.00	0.00	0.00	0.00	0.09
	Akzo Nobel	UTE 350 RM 99U Black	8.38	3.71	2.83	0.33	0.00	0.00	0.00	0.00	0.00	0.33	0.00	0.33	0.33	0.00	0.00	0.00
	Akzo Nobel	UTE 280/350 Hardener-Topcoat	10.26	1.53	0.00	0.00	0.00	0.00	0.00	0.00	0.00	0.00	0.00	0.00	0.00	0.00	0.00	0.00
	Akzo Nobel	UTE R200 Reducer	7.14	0.00	0.04	0.00	0.00	0.01	0.00	0.00	0.00	0.00	0.00	0.00	0.00	0.00	0.00	0.00
		Spray Total (tons/yr.)		52.35	29.04	0.39	1.65	0.01	1.39	1.10	0.24	0.84	2.77	0.33	1.68	0.24	0.05	0.56

Table 4-1: Coating Use and Coating Constituent Amounts

PTE Daily Use (gal/day) @4days* 52weeks =208 days/year	PTE Annual Use (gal./year)	Manufacturer	Coating Material (See Notes)	Methyl n-Amyl Ketone	2-butoxyethyl acetate	n-Butyl Acetate	tert-Butyl acetate	Xylene	Carbon Black	Light Aromatic Hydrocarbons
				110-43-0	112-07-2	123-86-4	540-88-5	1330-20-7	1333-86-4	64742-95-6
18.00	3744	Akzo Nobel	LV260 Primer	5.0%		5.0%	5.0%			
6.00	1248	Akzo Nobel	LV260 Epoxy Primer Hardener Fast					15.0%		20.0%
3.00	624	Akzo Nobel	Reducer LV260-Slow	65.0%						
0.25	52	Akzo Nobel	SRA Strong Reducer			45.0%				
14.00	2912	Akzo Nobel	UTE Tint Composite			25.0%				5.0%
18.00	3744	Akzo Nobel	UTE 350 Binder							
4.00	832	Akzo Nobel	UTE 99 Reducer	25.0%	50.0%	5.0%				
10.50	2184	Akzo Nobel	UTE 280/350 Hardener							
0.30	62	Akzo Nobel	998 Accelerator			5.0%				
7.50	1560	Akzo Nobel	UTE 350 RM 99U Black	5.0%		25.0%		5.0%	5.0%	
2.50	520	Akzo Nobel	UTE 280/350 Hardener-Topcoat							
0.06	12	Akzo Nobel	UTE R200 Reducer	55.0%						
84.1	17494.9									
Component Characteristics			If volatile, enter "1" ==>	1	1	1	1	1		

	Maker	Coating Material	Methyl n-Amyl Ketone	2-butoxyethyl acetate	n-Butyl Acetate	tert-Butyl acetate	Xylene	Carbon Black	Light Aromatic Hydrocarbons
Hourly Spray Calculations (lbs./hr.) (Based on 24-hr averaging period, see sample calc below)	Akzo Nobel	LV260 Primer	0.56	0.00	0.56	0.56	0.00	0.00	0.00
	Akzo Nobel	LV260 Epoxy Primer Hardener Fast	0.00	0.00	0.00	0.00	0.28	0.00	0.38
	Akzo Nobel	Reducer LV260-Slow	0.59	0.00	0.00	0.00	0.00	0.00	0.00
	Akzo Nobel	SRA Strong Reducer	0.00	0.00	0.04	0.00	0.00	0.00	0.00
	Akzo Nobel	UTE Tint Composite	0.00	0.00	1.27	0.00	0.00	0.00	0.25
	Akzo Nobel	UTE 350 Binder	0.00	0.00	0.00	0.00	0.00	0.00	0.00
	Akzo Nobel	UTE 99 Reducer	0.32	0.63	0.06	0.00	0.00	0.00	0.00
	Akzo Nobel	UTE 280/350 Hardener	0.00	0.00	0.00	0.00	0.00	0.00	0.00
	Akzo Nobel	998 Accelerator	0.00	0.00	0.00	0.00	0.00	0.00	0.00
	Akzo Nobel	UTE 350 RM 99U Black	0.13	0.00	0.65	0.00	0.13	0.13	0.00
	Akzo Nobel	UTE 280/350 Hardener-Topcoat	0.00	0.00	0.00	0.00	0.00	0.00	0.00
	Akzo Nobel	UTE R200 Reducer	0.01	0.00	0.00	0.00	0.00	0.00	0.00
		Spray Total (lb/hr)	1.601	0.631	2.580	0.555	0.414	0.131	0.631

	Maker	Coating Material	Methyl n-Amyl Ketone	2-butoxyethyl acetate	n-Butyl Acetate	tert-Butyl acetate	Xylene	Carbon Black	Light Aromatic Hydrocarbons
Annual Spray Calculations (tons/yr.) (See sample calc below)	Akzo Nobel	LV260 Primer	1.39	0.00	1.39	1.39	0.00	0.00	0.00
	Akzo Nobel	LV260 Epoxy Primer Hardener Fast	0.00	0.00	0.00	0.00	0.71	0.00	0.94
	Akzo Nobel	Reducer LV260-Slow	1.47	0.00	0.00	0.00	0.00	0.00	0.00
	Akzo Nobel	SRA Strong Reducer	0.00	0.00	0.09	0.00	0.00	0.00	0.00
	Akzo Nobel	UTE Tint Composite	0.00	0.00	3.16	0.00	0.00	0.00	0.63
	Akzo Nobel	UTE 350 Binder	0.00	0.00	0.00	0.00	0.00	0.00	0.00
	Akzo Nobel	UTE 99 Reducer	0.79	1.57	0.16	0.00	0.00	0.00	0.00
	Akzo Nobel	UTE 280/350 Hardener	0.00	0.00	0.00	0.00	0.00	0.00	0.00
	Akzo Nobel	998 Accelerator	0.00	0.00	0.01	0.00	0.00	0.00	0.00
	Akzo Nobel	UTE 350 RM 99U Black	0.33	0.00	1.63	0.00	0.33	0.33	0.00
	Akzo Nobel	UTE 280/350 Hardener-Topcoat	0.00	0.00	0.00	0.00	0.00	0.00	0.00
	Akzo Nobel	UTE R200 Reducer	0.02	0.00	0.00	0.00	0.00	0.00	0.00
		Spray Total (tons/yr.)	4.00	1.57	6.44	1.39	1.03	0.33	1.57

Table 4-1: Coating Use and Coating Constituent Amounts

HAP/TAP/Solids Example Calculation:		
Methyl acetate is a TAP present in Akzo Nobel LV260 Primer		
Methyl acetate HOURLY SPRAY RATE (24-hr Average)	Max Hourly Methyl acetate in LV260 Primer	= 18 gal/day * 14.81 lb/gal density * 5.0 wt% Methyl acetate in LV260 Primer * 1 day/24 hrs = 0.56 lb/hr Methyl acetate in LV260 Primer
	Max Hourly methyl acetate in other products, if present, is calculated in a similar manner. Spray Total methyl acetate is calculated by adding all Akzo Nobel methyl acetate.	
	Metyyl acetate Hourly Spray Total	= 0.56 lb/hr Methyl acetate in LV260 Primer + 0.00 lb/hr methyl acetate in other products = 0.56 lb/hr Methyl acetate in all prodocts
Methyl acetate ANNUAL SPRAY RATE	Max 12-mo Methyl acetate in LV260 Primer	= 2885 gal/yr LV260 Primer *14.81 lb/gal density *5.0 wt% Methyl acetate in LV260 Primer * 1 ton/2000 lbs = 1.07 tons/yr Methyl acetate in LV260 Primer
	Max 12-mo Methyl acetate in other products, if present, is calculated in a similar manner. Spray Total Methyl acetate is calculated by adding all Akzo Nobel Methyl acetate	
	Methyl acetate Annual Spray Total	= 1.07 tons/yr Methyl acetate in LV260 Primer + 0.00 tons/yr Methyl acetate in other products = 1.07 tons/yr Methyl acetate in all prodocts
Solids that can be emitted as particluates are present in several Akzo Nobel products		
Particuate HOURLY SPRAY RATE (24-hr Average)	Max Hourly solids in LV260 Primer	= 18 gal/day * 14.81 lb/gal density * 78.9 wt% solids in LV260 Primer * 1 day/24 hrs =8.76 lb/hr solids in LV260 Primer
	Max Hourly solids in other products is calculated in a similar manner. Spray Total Particulate Matter is calculated by adding all Akzo Nobel Particulate Matter.	
	Solids Hourly Spray Total	= 8.76 lb/hr solids in LV260 Primer + 12.21 lb/hr solids in other products =21.0 lb/hr solids in all prodocts
Particulate ANNUAL SPRAY RATE	Max 12-mo solids	= 3744 gal/yr LV260 Primer * 14.81 lb/gal density *78.9 wt% solids in LV260 Primer * 1 ton/2000 lbs =21.87 tons/yr solids in LV260 Primer
	Max 12-mo solids in other products is calculated in a similar manner. Spray Total solids is calculated by adding all Akzo Nobel solids.	
	Solids Annual Spray Total	= 21.87 tons/yr solids in LV260 Primer + 30.48 tons/yr solids in other products = 52.35 tons/yr solids in all products

Table 4-2: Paint Operations Emissions Summary

Toxic Air Pollutants	CAS	Maximum Spray Rate[1] (lb/hr)	Spray Retention Rate[2] (%)	Potential to Emit (lb/hr)	Paint Filter Efficiency[3,4] (%)	Controlled Emission Rate (lb/hr)
Acetone	67-64-1	0.156	0%	0.156	0%	0.156
1-Butanol	71-36-3	0.661	0%	0.661	0%	0.661
Methyl Ethyl Ketone	78-93-3	0.004	0%	0.004	0%	0.004
Methyl Acetate	79-20-9	0.555	0%	0.555	0%	0.555
1,2,4-Trimethylbenzene	95-63-6	0.442	0%	0.442	0%	0.442
Cumene	98-82-8	0.094	0%	0.094	0%	0.094
Ethylbenzene	100-41-4	0.336	0%	0.336	0%	0.336
1-Methoxy-2-propanol	107-98-2	1.111	0%	1.111	0%	1.111
Methyl Isobutyl Ketone	108-10-1	0.131	0%	0.131	0%	0.131
1-Methoxy-2-Propanol Acetate	108-65-6	0.673	0%	0.673	0%	0.673
1,3,5-trimethylbenzene	108-67-8	0.094	0%	0.094	0%	0.094
Toluene	108-88-3	0.020	0%	0.020	0%	0.020
Methyl isoamyl ketone	110-12-3	1.601	0%	1.601	0%	1.601
Methyl n-Amyl Ketone	110-43-0	1.601	0%	1.601	0%	1.601
2-butoxyethyl acetate	112-07-2	0.631	0%	0.631	0%	0.631
n-Butyl Acetate	123-86-4	2.580	0%	2.580	0%	2.580
tert-Butyl acetate	540-88-5	0.555	0%	0.555	0%	0.555
Xylene	1330-20-7	0.414	0%	0.414	0%	0.414
Carbon Black	1333-86-4	0.131	85%	0.020	99.9900%	0.0000020

Criteria Air Pollutants	Maximum Spray Rate[1]		Spray Retention Rate[2]	Potential to Emit		Paint Filter Efficiency[3]	Controlled Emissions	
	lb/hr	ton/yr	%	lb/hr	ton/yr	%	lb/hr	ton/yr
PM_{10}	20.97	52.35	85%	3.15	7.85	99.99%	0.00031	0.00079
$PM_{2.5}$	20.97	52.35	85%	3.15	7.85	99.99%	0.00031	0.00079
VOC	11.64	29.04	0%	11.64	29.04	0%	11.64	29.04

Hazardous Air Pollutants (HAP)	CAS	Maximum Spray Rate[1] (ton/yr)	Spray Retention Rate (%)	Paint Filter Efficiency[3]	Potential to Emit (ton/yr)
Cumene	98-82-8	0.2356	0%	0%	0.2356
Ethylbenzene	100-41-4	0.8396	0%	0%	0.8396
Methyl Isobutyl Ketone	108-10-1	0.3268	0%	0%	0.3268
Toluene	108-88-3	0.0493	0%	0%	0.0493
Xylene	1330-20-7	1.03	0%	0%	1.03
				Total HAPs (tons) =	2.5
				Total HAPS (lbs.)	4970

Notes:

1. The maximum hourly or annual Spray Total of the coatings.
2. Non-volatile emissions are calculated using a coating retention rate of 85%.

5. EMISSION INVENTORY WORKBOOK FORMS EI DOCUMENTATION

Criteria pollutant, TAP, and HAP emissions from all Western Trailer sources are summarized in Tables 5-1, 5-2, 5-3, 5-4, 5-5 and 5-6 (below). These facility-wide emissions include those from the natural gas-fired Make-up Air Heaters (MAU1 – MAU3); Building 1 Space Heater-exempt, Building 1 Unit Heaters, Building 1 Tool Room Furnace-exempt, Building 1 Office Furnaces-exempt, Building 8 Unit Heaters-exempt, Building 8 Training Room Furnace-exempt, Building 10 Welding Area Unit Heaters, Building 10 Machine Shop Area Unit Heaters – exempt, Building 10 Office Furnaces-exempt, Blast Building Unit Heaters-exempt; solvent recycling; blast cleaning in the Blast Building and Building 10; welding in Building 1, Building 8, and Building 10; aluminum metal cutting in Building 1 and Building 10; deburring in Building 1; and paint spray in the Paint Booth Building.

5.1 New Source Review (NSR) Regulated Pollutants Potential to Emit

NSR applies to new major sources and major modifications in non-attainment areas. For this application, pre-project estimated NSR Regulated Pollutant emissions are set at zero and post-project estimated NSR unrestricted uncontrolled regulated criteria pollutant emission estimates are summarized in Tables 5-1a, 5-1b and 5-1c (below). These emissions are the maximum potential emissions of facility processes and materials (including natural gas-fired Make-up Air Heaters (MAU1 – MAU3); Building 1 Space Heater-exempt, Building 1 Unit Heaters, Building 1 Tool Room Furnace-exempt, Building 1 Office Furnaces-exempt, Building 8 Unit Heaters-exempt, Building 8 Training Room Furnace-exempt, Building 10 Welding Area Unit Heaters, Building 10 Machine Shop Area Unit Heaters – exempt, Building 10 Office Furnaces-exempt, Blast Building Unit Heaters-exempt; solvent recycling; blast cleaning in the Blast Building and Building 10; welding in Building 1, Building 8, and Building 10; aluminum metal cutting in Building 1 and Building 10; deburring in Building 1; and paint spray in the Paint Booth Building) without regard to actual operation or material use.

Restricted controlled regulated criteria pollutant emission estimates are summarized in Tables 5-2a, 5-2b and 5-2c (below). These emissions are the estimated actual potential emissions of facility processes and materials under the proposed operational and material use limits. The maximum PTE for restricted and controlled emissions from the sources listed above for each of the criteria pollutants associated with this project, except for greenhouse gases, is less than 100 tons per year. Estimated CO_2-equivalent greenhouse gas emissions are less than 100,000 tons per year. Since estimated CO_2-equivalent greenhouse gas emissions are less than 100,000 tons per year, it is not a "GHG-Only Source" and the amount of greenhouse gas emissions on a mass-basis is not considered.

5.2 Criteria Pollutants Potential to Emit

Estimated facility-wide criteria pollutant emissions under the proposed chemical use and

production limits are summarized in Table 5-3 (below). None of the criteria pollutants except VOCs are emitted at rates exceeding 10% of the significance threshold. Consequently, since the criteria pollutant emissions potentially subject to air dispersion modeling are below regulatory concern, air dispersion modeling is not required.

5.3 Toxic Air Pollutant Facility-Wide Emissions

Estimated facility-wide TAP emissions under the proposed use and production limits are summarized in Table 5-4 and 5-5 (below) for non-carcinogenic and carcinogenic TAP. The restricted PTE uncontrolled emissions are described in Table 5-4 and the restricted PTE controlled emissions are described in in Table 5-5. The uncontrolled and controlled emissions of each TAP is compared to its respective Screening Emission Level.[24] Facility-wide total emissions of seven uncontrolled TAPs—arsenic, cadmium, chromium+6, formaldehyde, manganese, nickel and phosphorous exceed emission screening levels (Table 5-4). Five controlled TAP emissions exceed emission screening levels— arsenic, cadmium, chromium+6, formaldehyde, and nickel (Table 5-5). A completed IDEQ Toxic Air Pollutant (TAP) Preconstruction Compliance Application Completeness Checklist is included in Appendix C. IDEQ policy is that TAP emissions levels (EL) included in Rules Section 585 and 586 are derived based on generic modeling and that compliance with 210.08 is assured if controlled emissions are below applicable ELs.[25] Consequently, only the five controlled TAP emissions that exceed emission screening levels must be modeled. The air dispersion modeling of arsenic, cadmium, chromium+6, formaldehyde, and nickel are described in Section 7, below.

5.4 Hazardous Air Pollutant Facility-Wide Emissions

Estimated HAP emissions at Western Trailer under the proposed plasma cutting and aluminum coating limits are summarized in Table 5-6 (below). Facility-wide PTE of total HAPs is 2.3 tons per year, considerably less than the 10 tons per year individual HAP threshold and the 25 tons per year aggregate HAP threshold for major facilities.

[24] IDAPA 58.01.01.585 and 586.

[25] Email from Kevin Schilling, Idaho Department of Environmental Quality, to Chris Johnson, TORF Environmental Management, RE: Modeling Protocol Questions, July 28, 2016.

Tables 5-1a to 5-1c:
Facility-Wide Unrestricted Uncontrolled NSR Regulated Pollutant Emissions

Table 5-1a: Pre-Project Potential to Emit

Emissions Unit	$PM_{2.5}$	PM_{10}	SO_2	NO_2	CO	VOC	Lead	Greenhouse Gases CO_2e
	tons/yr							
Paint Buiding MAU1	0	0	0	0	0	0	0	0
Paint Buiding MAU2	0	0	0	0	0	0	0	0
Paint Buiding MAU3	0	0	0	0	0	0	0	0
Blast Building Heaters	0	0	0	0	0	0	0	0
Building1 Heater1	0	0	0	0	0	0	0	0
Building1 Heaters2	0	0	0	0	0	0	0	0
Building8 Heaters	0	0	0	0	0	0	0	0
Building10 Heaters	0	0	0	0	0	0	0	0
Building 8 Training Rm Heater	0	0	0	0	0	0	0	0
Paint Spray Booth	0	0	0	0	0	0	0	0
Solvent Recyling	0	0	0	0	0	0	0	0
Media Blasting Blast Bldg	0	0	0	0	0	0	0	0
Media Blasting Bldg 10	0	0	0	0	0	0	0	0
Welding	0	0	0	0	0	0	0	0
Metal Cutting Bldg 1	0	0	0	0	0	0	0	0
Metal Cutting Bldg 10	0	0	0	0	0	0	0	0
Metal Deburring Bldg 1	0	0	0	0	0	0	0	0
Total =	0	0	0	0	0	0	0	0

Table 5-1b: Post-Project Potential to Emit

Emissions Unit	$PM_{2.5}$	PM_{10}	SO_2	NO_2	CO	VOC	Lead	Greenhouse Gases CO_2e
	tons/yr							
Paint Buiding MAU1	4.90E-02	4.90E-02	3.86E-03	6.44E-01	5.41E-01	3.54E-02	3.22E-06	6.97E+02
Paint Buiding MAU2	4.90E-02	4.90E-02	3.86E-03	6.44E-01	5.41E-01	3.54E-02	3.22E-06	6.97E+02
Paint Buiding MAU3	1.83E-01	1.83E-01	1.44E-02	2.40E+00	2.02E+00	1.32E-01	1.20E-05	2.60E+03
Blast Building Heaters	1.96E-02	1.96E-02	1.55E-03	2.58E-01	2.16E-01	1.42E-02	1.29E-06	2.79E+02
Building1 Heater1	9.79E-04	9.79E-04	7.73E-05	1.29E-02	1.08E-02	7.09E-04	6.44E-08	1.39E+01
Building1 Heaters2	1.63E-01	1.63E-01	1.29E-02	2.15E+00	1.80E+00	1.18E-01	1.07E-05	2.32E+03
Building8 Heaters	1.37E-02	1.37E-02	1.08E-03	1.80E-01	1.51E-01	9.92E-03	9.02E-07	1.95E+02
Building10 Heaters	9.30E-03	9.30E-03	7.34E-04	1.22E-01	1.03E-01	6.73E-03	6.12E-07	3.97E+02
Building 8 Training Rm Heater	3.26E-03	3.26E-03	2.58E-04	4.29E-02	3.61E-02	2.36E-03	2.15E-07	4.65E+01
Paint Spray Booth	1.65E+01	1.65E+01	0.00E+00	0.00E+00	0.00E+00	6.12E+01	0.00E+00	0.00E+00
Solvent Recyling	0.00E+00	0.00E+00	0.00E+00	0.00E+00	0.00E+00	2.45E-02	0.00E+00	0.00E+00
Media Blasting Blast Bldg	1.95E+02	1.95E+02	0.00E+00	0.00E+00	0.00E+00	0.00E+00	0.00E+00	0.00E+00
Media Blasting Bldg 10	4.27E-03	4.27E-03	0.00E+00	0.00E+00	0.00E+00	0.00E+00	0.00E+00	0.00E+00
Welding	8.71E-01	8.71E-01	0.00E+00	0.00E+00	0.00E+00	0.00E+00	0.00E+00	0.00E+00
Metal Cutting Bldg 1	2.17E+00	2.17E+00	0.00E+00	0.00E+00	0.00E+00	0.00E+00	0.00E+00	0.00E+00
Metal Cutting Bldg 10	2.37E-02	2.37E-02	0.00E+00	0.00E+00	0.00E+00	0.00E+00	0.00E+00	0.00E+00
Metal Deburring Bldg 1	6.65E-03	6.65E-03	0.00E+00	0.00E+00	0.00E+00	0.00E+00	0.00E+00	0.00E+00
Total =	**2.15E+02**	**2.15E+02**	**3.87E-02**	**6.46E+00**	**5.42E+00**	**6.15E+01**	**3.23E-05**	**7.25E+03**

Table 5-1c: Changes in Potential to Emit

Emissions Unit	$PM_{2.5}$	PM_{10}	SO_2	NO_2	CO	VOC	Lead	Greenhouse Gases CO_2e
	tons/yr							
Paint Buiding MAU1	4.90E-02	4.90E-02	3.86E-03	6.44E-01	5.41E-01	3.54E-02	3.22E-06	6.97E+02
Paint Buiding MAU2	4.90E-02	4.90E-02	3.86E-03	6.44E-01	5.41E-01	3.54E-02	3.22E-06	6.97E+02
Paint Buiding MAU3	1.83E-01	1.83E-01	1.44E-02	2.40E+00	2.02E+00	1.32E-01	1.20E-05	2.60E+03
Blast Building Heaters	1.96E-02	1.96E-02	1.55E-03	2.58E-01	2.16E-01	1.42E-02	1.29E-06	2.79E+02
Building1 Heater1	9.79E-04	9.79E-04	7.73E-05	1.29E-02	1.08E-02	7.09E-04	6.44E-08	1.39E+01
Building1 Heaters2	1.63E-01	1.63E-01	1.29E-02	2.15E+00	1.80E+00	1.18E-01	1.07E-05	2.32E+03
Building8 Heaters	1.37E-02	1.37E-02	1.08E-03	1.80E-01	1.51E-01	9.92E-03	9.02E-07	1.95E+02
Building10 Heaters	9.30E-03	9.30E-03	7.34E-04	1.22E-01	1.03E-01	6.73E-03	6.12E-07	3.97E+02
Paint Spray Booth	1.65E+01	1.65E+01	0.00E+00	0.00E+00	0.00E+00	6.12E+01	0.00E+00	0.00E+00
Solvent Recyling	0.00E+00	0.00E+00	0.00E+00	0.00E+00	0.00E+00	2.45E-02	0.00E+00	0.00E+00
Media Blasting Blast Bldg	1.95E+02	1.95E+02	0.00E+00	0.00E+00	0.00E+00	0.00E+00	0.00E+00	0.00E+00
Media Blasting Bldg 10	4.27E-03	4.27E-03	0.00E+00	0.00E+00	0.00E+00	0.00E+00	0.00E+00	0.00E+00
Welding	8.71E-01	8.71E-01	0.00E+00	0.00E+00	0.00E+00	0.00E+00	0.00E+00	0.00E+00
Metal Cutting Bldg 1	2.17E+00	2.17E+00	0.00E+00	0.00E+00	0.00E+00	0.00E+00	0.00E+00	0.00E+00
Metal Cutting Bldg 10	2.37E-02	2.37E-02	0.00E+00	0.00E+00	0.00E+00	0.00E+00	0.00E+00	0.00E+00
Metal Deburring Bldg 1	6.65E-03	6.65E-03	0.00E+00	0.00E+00	0.00E+00	0.00E+00	0.00E+00	0.00E+00
Total =	**2.15E+02**	**2.15E+02**	**3.85E-02**	**6.41E+00**	**5.39E+00**	**6.15E+01**	**3.21E-05**	**7.21E+03**

Example Calculations

Heaters	Restricted Uncontrolled Emissions*(24 hours/day)*(365 days/year)/(20 hrs./day)*(4 days/week)*(52 weeks/year)
Paint Spray Booth	Restricted Uncontrolled Emissions*(24 hours/day)*(365 days/year)/(20 hrs./day)*(4 days/week)*(52 weeks/year)
Solvent Recycling	Restricted Uncontrolled Emissions*(24 hours/day)*(365 days/year)/(20 hrs./day)*(365 days/year)
Media Blasting Blast Bldg	Unrestricted Uncontrolled Emissions
Media Blasting Bldg 10	Unrestricted Uncontrolled Emissions
Welding	Restricted Uncontrolled Emissions*(24 hours/day)*(365 days/year)/(20 hrs./day)*(4 days/week)*(52 weeks/year)
Metal Cutting Bldg 1	Restricted Uncontrolled Emissions*(24 hours/day)*(365 days/year)/(20 hrs./day)*(4 days/week)*(52 weeks/year)
Metal Cutting Bldg 10	Restricted Uncontrolled Emissions*(24 hours/day)*(365 days/year)/(16 hrs./day)*5 days/week)*(50 weeks/year)
Deburring	Restricted Uncontrolled Emissions*(24 hours/day)*(365 days/year)/(20 hrs./day)*(4 days/week)*(52 weeks/year)

Tables 5-2a to 5-2c:
Facility-Wide Restricted Controlled NSR Regulated Pollutant Emissions

Table 5-2a: Pre-Project Potential to Emit (based on existing permit conditions)

Emissions Unit	$PM_{2.5}$	PM_{10}	SO_2	NO_2	CO	VOC	Lead	Greenhouse Gases CO_2e
	tons/yr							
Paint Buiding MAU1	0	0	0	0	0	0	0	0
Paint Buiding MAU2	0	0	0	0	0	0	0	0
Paint Buiding MAU3	0	0	0	0	0	0	0	0
Blast Building Heaters	0	0	0	0	0	0	0	0
Building1 Heater1	0	0	0	0	0	0	0	0
Building1 Heaters2	0	0	0	0	0	0	0	0
Building8 Heaters	0	0	0	0	0	0	0	0
Building10 Heaters	0	0	0	0	0	0	0	0
Building 8 Training Rm Heater	0	0	0	0	0	0	0	0
Paint Spray Booth	0	0	0	0	0	0	0	0
Solvent Recyling	0	0	0	0	0	0	0	0
Media Blasting Blast Bldg	0	0	0	0	0	0	0	0
Media Blasting Bldg 10	0	0	0	0	0	0	0	0
Welding	0	0	0	0	0	0	0	0
Metal Cutting Bldg 1	0	0	0	0	0	0	0	0
Metal Cutting Bldg 10	0	0	0	0	0	0	0	0
Metal Deburring Bldg 1	0	0	0	0	0	0	0	0
Total =	0	0	0	0	0	0	0	0

Table 5-2b: Post-Project Potential to Emit (based on requested permit conditions)

Emissions Unit	$PM_{2.5}$	PM_{10}	SO_2	NO_2	CO	VOC	Lead	Greenhouse Gases CO_2e
	tons/yr							
Paint Buiding MAU1	2.45E-02	2.45E-02	1.93E-03	3.22E-01	2.71E-01	1.77E-02	1.61E-06	3.49E+02
Paint Buiding MAU2	2.45E-02	2.45E-02	1.93E-03	3.22E-01	2.71E-01	1.77E-02	1.61E-06	3.49E+02
Paint Buiding MAU3	1.05E-01	1.05E-01	8.30E-03	1.38E+00	1.16E+00	7.61E-02	6.92E-06	1.50E+03
Blast Building Heaters	9.79E-03	9.79E-03	7.73E-04	1.29E-01	1.08E-01	7.09E-03	6.44E-07	1.39E+02
Building1 Heater1	4.90E-04	4.90E-04	3.86E-05	6.44E-03	5.41E-03	3.54E-04	3.22E-08	6.97E+00
Building1 Heaters2	8.16E-02	8.16E-02	6.44E-03	1.07E+00	9.02E-01	5.90E-02	5.37E-06	1.16E+03
Building8 Heaters	6.85E-03	6.85E-03	5.41E-04	9.02E-02	7.57E-02	4.96E-03	4.51E-07	9.76E+01
Building10 Heaters	3.01E-03	3.01E-03	3.67E-04	6.12E-02	5.14E-02	3.37E-03	3.06E-07	6.62E+01
Building 8 Training Rm Heater	1.63E-03	1.63E-03	1.29E-04	2.15E-02	1.80E-02	1.18E-03	1.07E-07	2.32E+01
Paint Spray Booth	7.85E-03	7.85E-03	0.00E+00	0.00E+00	0.00E+00	2.90E+01	0.00E+00	0.00E+00
Solvent Recyling	0.00E+00	0.00E+00	0.00E+00	0.00E+00	0.00E+00	2.04E-02	0.00E+00	0.00E+00
Media Blasting Blast Bldg	2.77E-01	2.77E-01	0.00E+00	0.00E+00	0.00E+00	0.00E+00	0.00E+00	0.00E+00
Media Blasting Bldg 10	1.95E-06	1.95E-06	0.00E+00	0.00E+00	0.00E+00	0.00E+00	0.00E+00	0.00E+00
Welding	4.14E-01	4.14E-01	0.00E+00	0.00E+00	0.00E+00	0.00E+00	0.00E+00	0.00E+00
Metal Cutting Bldg 1	1.03E-03	1.03E-03	0.00E+00	0.00E+00	0.00E+00	0.00E+00	0.00E+00	0.00E+00
Metal Cutting Bldg 10	3.61E-06	3.61E-06	0.00E+00	0.00E+00	0.00E+00	0.00E+00	0.00E+00	0.00E+00
Metal Deburring Bldg 1	3.16E-05	3.16E-05	0.00E+00	0.00E+00	0.00E+00	0.00E+00	0.00E+00	0.00E+00
Total =	**9.58E-01**	**9.58E-01**	**2.05E-02**	**3.41E+00**	**2.86E+00**	**2.92E+01**	**1.70E-05**	**3.69E+03**

Table 5-2c: Changes in Potential to Emit

Emissions Unit	$PM_{2.5}$	PM_{10}	SO_2	NO_2	CO	VOC	Lead	Greenhouse Gases CO_2e
	tons/yr							
Paint Buiding MAU1	2.45E-02	2.45E-02	1.93E-03	3.22E-01	2.71E-01	1.77E-02	1.61E-06	3.49E+02
Paint Buiding MAU2	2.45E-02	2.45E-02	1.93E-03	3.22E-01	2.71E-01	1.77E-02	1.61E-06	3.49E+02
Paint Buiding MAU3	1.05E-01	1.05E-01	8.30E-03	1.38E+00	1.16E+00	7.61E-02	6.92E-06	1.50E+03
Blast Building Heaters	9.79E-03	9.79E-03	7.73E-04	1.29E-01	1.08E-01	7.09E-03	6.44E-07	1.39E+02
Building1 Heater1	4.90E-04	4.90E-04	3.86E-05	6.44E-03	5.41E-03	3.54E-04	3.22E-08	6.97E+00
Building1 Heaters2	8.16E-02	8.16E-02	6.44E-03	1.07E+00	9.02E-01	5.90E-02	5.37E-06	1.16E+03
Building8 Heaters	6.85E-03	6.85E-03	5.41E-04	9.02E-02	7.57E-02	4.96E-03	4.51E-07	9.76E+01
Building10 Heaters	3.01E-03	3.01E-03	3.67E-04	6.12E-02	5.14E-02	3.37E-03	3.06E-07	6.62E+01
Building 8 Training Rm Heater	1.63E-03	1.63E-03	1.29E-04	2.15E-02	1.80E-02	1.18E-03	1.07E-07	2.32E+01
Paint Spray Booth	7.85E-03	7.85E-03	0.00E+00	0.00E+00	0.00E+00	2.90E+01	0.00E+00	0.00E+00
Solvent Recyling	0.00E+00	0.00E+00	0.00E+00	0.00E+00	0.00E+00	2.04E-02	0.00E+00	0.00E+00
Media Blasting Blast Bldg	2.77E-01	2.77E-01	0.00E+00	0.00E+00	0.00E+00	0.00E+00	0.00E+00	0.00E+00
Media Blasting Bldg 10	1.95E-06	1.95E-06	0.00E+00	0.00E+00	0.00E+00	0.00E+00	0.00E+00	0.00E+00
Welding	4.14E-01	4.14E-01	0.00E+00	0.00E+00	0.00E+00	0.00E+00	0.00E+00	0.00E+00
Metal Cutting Bldg 1	1.03E-03	1.03E-03	0.00E+00	0.00E+00	0.00E+00	0.00E+00	0.00E+00	0.00E+00
Metal Cutting Bldg 10	3.61E-06	3.61E-06	0.00E+00	0.00E+00	0.00E+00	0.00E+00	0.00E+00	0.00E+00
Metal Deburring Bldg 1	3.16E-05	3.16E-05	0.00E+00	0.00E+00	0.00E+00	0.00E+00	0.00E+00	0.00E+00
Total =	**9.58E-01**	**9.58E-01**	**2.05E-02**	**3.41E+00**	**2.86E+00**	**2.92E+01**	**1.70E-05**	**3.69E+03**

Example Calculations

Heaters	Restricted Uncontrolled Emissions
Paint Spray Booth	Restricted Uncontrolled Emissions
Solvent Recycling	Restricted Uncontrolled Emissions
Media Blasting Blast Bldg	Restricted Controlled Emissions
Medai Blasting Bldg 10	Restricted Controlled Emissions
Welding	Restricted Uncontrolled Emissions
Metal Cutting	Restricted Controlled Emissions
Deburring	Restricted Controlled Emissions

Table 5-3: Criteria Pollutant Emissions Summary

Criteria Air Pollutants[1]	PTE Emissions		Significance Threshold		Below Regulatory Concern		Modeling Threshold	Modeling Required?	Modeling Threshold	Modeling Required?	% of Level II
	lb/hr	T/yr[2]	T/yr	Exceed?	T/yr	Exceed?	Level I		Level II		
NO_x	1.5	3.543	40	No	4	No	0.2 lb/hr	Yes	2.4 lb/hr	No	64%
							1.2 T/yr	Yes	14 T/yr	No	25%
CO	1.29	2.98	100	No	10	No	15 lb/hr	No	175 lb/hr	No	0.7%
PM_{10}	0.404	0.969	15	No	1.5	No	0.22 lb/hr	Yes	2.6 lb/hr	No	16%
$PM_{2.5}$	0.404	0.969	10	No	1	No	0.054 lb/hr	Yes	0.63 lb/hr	No	64%
							0.35 T/yr	Yes	4.1 T/yr	No	24%
SO_2	0.009	2.1E-02	40	No	4	No	0.21 lb/hr	No	0.9 lb/hr	No	1.0%
							1 T/yr	No	7 T/yr	No	0.13%
VOC	0.08	0.19	40	No	4	No					
Lead	7.7E-06	1.8E-05	0.6	No	0.06	No	14 lb/mo	No	14 lb/mo	No	0.04%
	5.2E-03	lb/month									
Total Criteria Emissions (ton/yr) =		**7.70**									

1 Exempt heaters included in total for the purpose of assessing BRC and modeling thresholds.
2 Based on maxium 5,040 hrs/yr (24 hrs/day, 6 days/week, 35 weeks/year) for gas-fired heater MAU3;
based on maxium 4380 hrs/yr (24 hrs/day, 6 days/week, 30.4 weeks/year) for all other gas-fired heaters including exempt heaters;
other processes based on 4160 hours/year (20 hrs/day, 4 days/week, 52 weeks/year).

Table 5-4:
Facility-Wide Toxic Air Pollutant Uncontrolled Emissions

Non-Carcinogenic Toxic Air Pollutant (24 hr Average)	CAS	Restricted UnControlled Hourly Emissions[1]			Screening Emission Level (lb/hr)	Exceeds Screening Emission Level?	% Screening Emission Level
		Pre-Project (lb/hr)	Post Project (lb/hr)	Emission Change (lb/hr)			
Acetone	67-64-1	0	1.56E-01	1.56E-01	1.19E+02	No	0.1%
Isopropyl alcohol	67-63-0	0	9.23E-08	9.23E-08	6.53E+01	No	0.0%
Methyl alcohol	67-56-1	0	2.66E-06	2.66E-06	1.73E+01	No	0.0%
1-Butanol	71-36-3	0	6.61E-01	6.61E-01	1.00E+01	No	6.6%
Methyl ethyl ketone	78-93-3	0	4.46E-03	4.46E-03	3.93E+01	No	0.0%
Methyl Acetate	79-20-9	0	5.55E-01	5.55E-01	4.07E+01	No	1.4%
Dichlorobenzene	95-50-1	0	1.73E-05	1.73E-05	2.00E+01	No	0.0%
1,2,4-Trimethylbenzene	95-63-6	0	4.42E-01	4.42E-01	8.20E+00	No	5.4%
Cumene	98-82-8	0	9.44E-02	9.44E-02	1.63E+01	No	0.6%
Ethylbenzene	100-41-4	0	3.36E-01	3.36E-01	2.90E+01	No	1.2%
1-Methoxy-2-propanol	107-98-2	0	1.11E+00	1.11E+00	2.40E+01	No	4.6%
Methyl Isobutyl Ketone	108-10-1	0	1.31E-01	1.31E-01	1.37E+01	No	1.0%
1-Methoxy-2-Propanol Acetate	108-65-6	0	6.73E-01	6.73E-01	2.40E+01	No	2.8%
1,3,5-trimethylbenzene	108-67-8	0	9.44E-02	9.44E-02	8.20E+00	No	1.2%
Toluene	108-88-3	0	1.98E-02	1.98E-02	2.50E+01	No	0.1%
Methyl n-Amyl Ketone	110-43-0	0	1.60E+00	1.60E+00	1.57E+01	No	10.2%
2-butoxyethyl acetate	112-07-2	0	6.31E-01	6.31E-01	8.33E+00	No	7.6%
Methyl isoamyl ketone	112-12-3	0	3.54E-05	3.54E-05	1.60E+01	No	0.0%
n-Butyl Acetate	123-86-4	0	2.58E+00	2.58E+00	4.73E+01	No	5.5%
Heptane	142-82-5	0	5.31E-06	5.31E-06	1.09E+02	No	0.0%
Silicon Carbide	409-21-2	0	2.28E-04	2.28E-04	6.67E-01	No	0.0%
tert-Butyl acetate	540-88-5	0	5.55E-01	5.55E-01	6.33E+01	No	0.9%
Xylene	1330-20-7	0	4.14E-01	4.14E-01	2.90E+01	No	1.4%
Carbon Black	1333-86-4	0	1.96E-05	1.96E-05	2.30E-01	No	0.0%
Fe - fume	7439-89-6	0	1.53E-01	1.53E-01	3.33E-01	No	45.9%
Mg - fume	7439-96-5	0	6.64E-04	6.64E-04	3.33E-01	No	0.2%
Mn	7439-96-5	0	4.44E-01	4.44E-01	3.33E-01	Yes	133.5%
Mn - fume	7439-96-5	0	5.02E-03	5.02E-03	6.70E-02	No	7.5%
Molyb	7439-98-7	0	1.18E-03	1.18E-03	6.67E-01	No	0.2%
Ba	7440-39-3	0	6.35E-05	6.35E-05	3.30E-02	No	0.2%
Al	7440-47-3	0	2.21E-01	2.21E-01	6.67E-01	No	33.1%
Cr	7440-47-3	0	8.51E-05	8.51E-05	3.30E-02	No	0.3%
Co	7440-48-4	0	1.49E-05	1.49E-05	3.30E-03	No	0.5%
Zn metal/dust	7440-66-6	0	4.19E-04	4.19E-04	6.67E-01	No	0.1%
Zn - fume	7440-66-6	0	1.15E-06	1.15E-06	3.33E-01	No	0.0%
Silicon	7440-21-3	0	3.75E-01	3.75E-01	6.67E-01	No	56.3%
Cu	7440-50-8	0	1.23E-05	1.23E-05	6.70E-02	No	0.0%
Cu - fume	7440-50-8	0	4.05E-03	4.05E-03	1.30E-02	No	31.2%
P	7723-14-0	0	1.30E-02	1.30E-02	7.00E-03	Yes	185.2%
Se	7782-49-2	0	3.46E-07	3.46E-07	1.30E-02	No	0.0%
V. M. & P. Naphtha	64742-89-8 8032-32-4	0	6.15E-07	6.15E-07	9.13E+01	No	0.0%

Carcinogenic Toxic Air Pollutant (Annual Average)	CAS	Restricted UnControlled Hourly Emissions[1]		Emission Change (lb/hr)	Screening Emission Level (lb/hr)	Exceeds Screening Emission Level?	% Screening Emission Level
		Pre-Project (lb/hr)	Post Project (lb/hr)				
Formaldehyde	50-00-0	0	6.1E-04	6.1E-04	5.1E-04	Yes	118.9%
Benzo(a)pyrene	50-32-8	0	9.7E-09	9.7E-09	2.0E-06	No	0.5%
3-Methylchloranthene	56-49-5	0	1.5E-08	1.5E-08	2.5E-06	No	0.6%
Benzene	71-43-2	0	1.7E-05	1.7E-05	8.0E-04	No	2.1%
Nickel	7440-02-0	0	2.8E-05	2.8E-05	2.7E-05	Yes	102.0%
Arsenic	7440-38-2	0	1.6E-06	1.6E-06	1.5E-06	Yes	107.8%
Beryllium	7440-41-7	0	1.3E-07	1.3E-07	2.8E-05	No	0.5%
Cadmium	7440-43-9	0	8.9E-06	8.9E-06	3.7E-06	Yes	240.5%
Cr+6	18540-29-9	0	1.4E-06	1.4E-06	5.6E-07	Yes	256.7%
Polyaromatic Hydrocarbon (Max)		0	5.4E-06	5.4E-06	9.1E-05	No	6.0%
Polycyclic Organics: 7-PAH Group		0	9.2E-08	9.2205E-08	2.0E-06	No	4.6%

Table 5-5:
Facility-Wide Toxic Air Pollutant Controlled Emissions

Non-Carcinogenic Toxic Air Pollutant (24 hr Average)	CAS	Restricted Controlled Hourly Emissions[1]			Screening Emission Level (lb/hr)	Exceeds Screening Emission Level?	% Screening Emission Level
		Pre-Project (lb/hr)	Post Project (lb/hr)	Emission Change (lb/hr)			
Acetone	67-64-1	0	1.56E-01	1.56E-01	1.19E+02	No	0.1%
Isopropyl alcohol	67-63-0	0	9.23E-08	9.23E-08	6.53E+01	No	0.0%
Methyl alcohol	67-56-1	0	2.66E-06	2.66E-06	1.73E+01	No	0.0%
1-Butanol	71-36-3	0	6.61E-01	6.61E-01	1.00E+01	No	6.6%
Methyl ethyl ketone	78-93-3	0	4.46E-03	4.46E-03	3.93E+01	No	0.0%
Methyl Acetate	79-20-9	0	5.55E-01	5.55E-01	4.07E+01	No	1.4%
Dichlorobenzene	95-50-1	0	1.73E-05	1.73E-05	2.00E+01	No	0.0%
1,2,4-Trimethylbenzene	95-63-6	0	4.42E-01	4.42E-01	8.20E+00	No	5.4%
Cumene	98-82-8	0	9.44E-02	9.44E-02	1.63E+01	No	0.6%
Ethylbenzene	100-41-4	0	3.36E-01	3.36E-01	2.90E+01	No	1.2%
1-Methoxy-2-propanol	107-98-2	0	1.11E+00	1.11E+00	2.40E+01	No	4.6%
Methyl Isobutyl Ketone	108-10-1	0	1.31E-01	1.31E-01	1.37E+01	No	1.0%
1-Methoxy-2-Propanol Acetate	108-65-6	0	6.73E-01	6.73E-01	2.40E+01	No	2.8%
1,3,5-trimethylbenzene	108-67-8	0	9.44E-02	9.44E-02	8.20E+00	No	1.2%
Toluene	108-88-3	0	1.98E-02	1.98E-02	2.50E+01	No	0.1%
Methyl n-Amyl Ketone	110-43-0	0	1.60E+00	1.60E+00	1.57E+01	No	10.2%
2-butoxyethyl acetate	112-07-2	0	6.31E-01	6.31E-01	8.33E+00	No	7.6%
Methyl isoamyl ketone	112-12-3	0	3.54E-05	3.54E-05	1.60E+01	No	0.0%
n-Butyl Acetate	123-86-4	0	2.58E+00	2.58E+00	4.73E+01	No	5.5%
Heptane	142-82-5	0	5.31E-06	5.31E-06	1.09E+02	No	0.0%
Silicon Carbide	409-21-2	0	2.28E-07	2.28E-07	6.67E-01	No	0.0%
tert-Butyl acetate	540-88-5	0	5.55E-01	5.55E-01	6.33E+01	No	0.9%
Xylene	1330-20-7	0	4.14E-01	4.14E-01	2.90E+01	No	1.4%
Carbon Black	1333-86-4	0	1.96E-05	1.96E-05	2.30E-01	No	0.0%
Fe - fume	7439-89-6	0	1.53E-01	1.53E-01	3.33E-01	No	45.9%
Mg - fume	7439-96-5	0	6.64E-04	6.64E-04	3.33E-01	No	0.2%
Mn	7439-96-5	0	1.34E-03	1.34E-03	3.33E-01	No	0.4%
Mn - fume	7439-96-5	0	5.02E-03	5.02E-03	6.70E-02	No	7.5%
Molyb	7439-98-7	0	1.18E-03	1.18E-03	6.67E-01	No	0.2%
Ba	7440-39-3	0	6.35E-05	6.35E-05	3.30E-02	No	0.2%
Al	7440-47-3	0	1.13E-02	1.13E-02	6.67E-01	No	1.7%
Cr	7440-47-3	0	8.51E-05	8.51E-05	3.30E-02	No	0.3%
Co	7440-48-4	0	2.40E-05	2.40E-05	3.30E-03	No	0.7%
Zn metal/dust	7440-66-6	0	4.19E-04	4.19E-04	6.67E-01	No	0.1%
Zn - fume	7440-66-6	0	1.15E-06	1.15E-06	3.33E-01	No	0.0%
Silicon	7440-21-3	0	6.08E-03	6.08E-03	6.67E-01	No	0.9%
Cu	7440-50-8	0	1.02E-05	1.02E-05	6.70E-02	No	0.0%
Cu - fume	7440-50-8	0	4.05E-03	4.05E-03	1.30E-02	No	31.2%
P	7723-14-0	0	3.89E-05	3.89E-05	7.00E-03	No	0.6%
Se	7782-49-2	0	3.46E-07	3.46E-07	1.30E-02	No	0.0%
V. M. & P. Naphtha	64742-89-8 8032-32-4	0	6.15E-07	6.15E-07	9.13E+01	No	0.0%

Carcinogenic Toxic Air Pollutant (Annual Average)	CAS	Restricted UnControlled Hourly Emissions[1]		Emission Change (lb/hr)	Screening Emission Level (lb/hr)	Exceeds Screening Emission Level?	% Screening Emission Level
		Pre-Project (lb/hr)	Post Project (lb/hr)				
Formaldehyde	50-00-0	0	6.1E-04	6.1E-04	5.1E-04	Yes	118.9%
Benzo(a)pyrene	50-32-8	0	9.7E-09	9.7E-09	2.0E-06	No	0.5%
3-Methylchloranthene	56-49-5	0	1.5E-08	1.5E-08	2.5E-06	No	0.6%
Benzene	71-43-2	0	1.7E-05	1.7E-05	8.0E-04	No	2.1%
Nickel	7440-02-0	0	2.8E-05	2.8E-05	2.7E-05	Yes	102.0%
Arsenic	7440-38-2	0	1.6E-06	1.6E-06	1.5E-06	Yes	107.8%
Beryllium	7440-41-7	0	1.3E-07	1.3E-07	2.8E-05	No	0.5%
Cadmium	7440-43-9	0	8.9E-06	8.9E-06	3.7E-06	Yes	240.5%
Cr+6	18540-29-9	0	1.4E-06	1.4E-06	5.6E-07	Yes	256.7%
Polyaromatic Hydrocarbon (Max)		0	5.4E-06	5.4E-06	9.1E-05	No	6.0%
Polycyclic Organics: 7-PAH Group		0	9.2E-08	9.2205E-08	2.0E-06	No	4.6%

Table 5-6:
Facility-Wide Hazardous Air Pollutant Emissions

Hazardous Air Pollutant	CAS	Potential to Emit (tons/yr)	Potential to Emit (lbs./yr)
Arsenic	7440-38-2	7.1E-06	1.4E-02
Benzene	71-43-2	7.4E-05	1.5E-01
Beryllium	7440-41-7	5.1E-07	1.0E-03
Cadmium	7440-43-9	3.9E-05	7.8E-02
Chromium	7440-47-3	2.1E-04	4.1E-01
Chromium +6	7440-47-3	6.3E-06	1.3E-02
Cobalt	7440-48-4	3.6E-05	7.2E-02
Dichlorobenzene	95-50-1	4.3E-05	8.5E-02
Ethylbenzene	100-41-4	8.4E-01	1.7E+03
Formaldehyde	50-00-0	2.7E-03	5.3E+00
Hexane	110-54-3	6.4E-02	1.3E+02
Lead		1.8E-05	3.5E-02
Manganese	7439-96-5	1.5E-02	3.1E+01
Mercury	7439-97-6	9.2E-06	1.8E-02
Methyl Isobutyl Ketone	108-10-1	3.3E-01	6.5E+02
Naphthalene	91-20-3	2.2E-05	4.3E-02
Nickel	7440-02-0	1.2E-04	2.4E-01
Polycyclic Organic Matter		4.0E-07	8.1E-04
Selenium	7782-49-2	8.5E-07	1.7E-03
Toluene	108-88-3	4.9E-02	9.9E+01
Xylene	1330-20-7	1.0E+00	2.1E+03
TOTAL =		2.3	4.7E+03

Methyl Ethyl Ketone, 78-93-3 - delisted 2005

6. PLOT PLAN – FORM PP DOCUMENTATION

6.1 Facility Boundary

Access to the Western Trailer facility is generally restricted with gates and a fence to control entry. However, it has open parking lots adjacent to Business Way at the north side of Building 1 and Supply Way at the west side of Building 8 such that the general public could access these areas. In addition, the public would potentially have unrestricted access to the east side of Building 1 and the west side of the Paint Booth Building. Therefore, the ambient air boundary is the fence-line with gates, the east side of Building 1 and the west side of the Paint Booth Building, as shown in Figure Plot Plan (below).

6.2 Building Dimensions

There are five buildings located at the facility (see Figure 2 Plot Plan, below). The building areas are shown at scale on the Plot Plan. The heights of buildings are labeled.

Map Source: Google Earth Pro, 2015.

Legend

Ambient Air Boundary

N

Scale as Shown

TORF ENVIRONMENTAL MANAGEMENT

Figure 2 Plot Plan

Western Trailer Co.
6701 Business Way
Boise, ID 83716

August 2016

7. Air Dispersion Modeling

As described in Section 5, above, facility-wide total emissions of 5 controlled TAP emissions exceed emission screening levels— arsenic, cadmium, chromium+6, formaldehyde, and nickel (Table 5-5). A Modeling Protocol was submitted to the IDEQ during the week of August 10, 2015 and a minor revision was submitted the week of September 18, 2015. Conditional DEQ protocol approval was provided in a letter dated October 6. Project-specific modeling and other required impact analyses were conducted using data and methods described in the protocol and in the *Idaho Air Quality Modeling Guideline*. The results of the modeling are provided in the Western Trailer Impact Modeling Protocol Report included in Appendix D.

8. FEDERAL REGULATION APPLICABILITY – FORM FRA DOCUMENTATION

8.1 New Source Performance Standards (40 CFR 60)

EPA has established New Source Performance Standards (NSPS) for new, modified, or reconstructed facilities and source categories. No Western Trailer facility equipment or processes have potentially applicable NSPS subparts.

8.2 National Emission Standards for Hazardous Air Pollutants (40 CFR 63)

EPA has established National Emission Standards for Hazardous Air Pollutants (NESHAP) for new, modified, or reconstructed facilities and source categories. The following NESHAP Subparts were evaluated for applicability to this project.

8.2.1 NESHAP Subpart MMMM Regulatory Review

The spray coating of trailers at Western Trailer is not covered under NESHAP Subpart MMMM.

40 CFR Part 63, Subpart MMMM NESHAP:	Surface Coating of Miscellaneous Metal Parts and Products

A miscellaneous metal parts and products surface coating facility is any facility engaged in the surface coating of any miscellaneous metal part or product. However, this category affects a miscellaneous metal parts and products surface coating facility that is a major source, or is located at a major source, or is part of a major source of HAP emissions. Since Western Trailer is not a major source and is not a major source of HAP emissions, this subpart does not apply to Western Trailer.

8.2.2 NESHAP Subpart HHHHHH Regulatory Review

The spray coating of trailers is covered under NESHAP Subpart HHHHHH and Western Trailer has been complying with the required paint booth, spray equipment, personnel training and recordkeeping requirements. However, in conjunction with this Application for Permit to Construct, a Petition for Exemption has been submitted to the U.S. Environmental Protection Agency Region X.

40 CFR Part 63, Subpart HHHHHH NESHAP:	Paint Stripping and Miscellaneous Surface Coating Operations at Area Sources

§ 63.11169 What is the purpose of this subpart?
In accordance with §63.11169, subpart HHHHHH establishes national emission standards for hazardous air pollutants (HAP) for area sources involved in auto body refinishing operations that

encompass motor vehicle and mobile equipment spray-applied surface coating operations.

§ 63.11170 Am I subject to this subpart?

In accordance with §63.11170(a), this mobile equipment coating operation is subject to this subpart because the facility will be operated as an area source of HAP. The facility is a source of HAP that is not a major source of HAP, is not located at a major source, and is not part of a major source of HAP emissions. In addition, the facility will perform one or more activities listed in this section, including spray application of coatings, as defined in §63.11180, to mobile equipment including operations that are located in stationary structures at fixed locations.

§ 63.11171 How do I know if my source is considered a new source or an existing source?

In accordance with §63.11171(b), the mobile equipment coating operation is the collection of mixing equipment; spray booths and associated equipment; spray guns and associated equipment; spray gun cleaning equipment; and equipment used for storage, handling, recovery, or recycling of cleaning solvent or waste paint. Paint stripping is not proposed as a business activity.

In accordance with §63.11171(c), this mobile equipment coating operation is an existing source because it commenced construction prior to September 17, 2007, by installing new surface coating equipment, and the new surface coating equipment will be used at a source that was actively engaged in miscellaneous surface coating prior to September 17, 2007.

§63.11172 When do I have to comply with this subpart?

In accordance with §63.11172(a)(2), because the initial startup of the facility occurred prior to January 9, 2008, the compliance date is January 10, 2011.

§63.11173 What are my general requirements for complying with this subpart?

Because the facility has not proposed paint-stripping activities, the requirements of §63.11173(a) through (f) are not applicable. Because the facility is a mobile equipment coating operation, in accordance with §63.11173(e), the permittee must meet the requirements of paragraphs (e)(1) through (e)(5) of this section These sections are listed below. In accordance with §63.11173(f), each owner or operator of an affected mobile equipment coating operation must ensure and certify that all new and existing personnel, including contract personnel, who spray apply surface coatings, as defined in §53.11180, are trained in the proper application of surface coatings as required by paragraph (e)(1) of this section. The training program must include, at a minimum, the items listed in paragraphs (f)(1) through (f)(3) of this section.

§63.11173(e)(2), all spray-applied coatings must be applied in a spray booth, preparation station, or mobile enclosure that meets the requirements of paragraph (e)(2)(i) of this section and either paragraph (e)(2)(ii), (e)(2)(iii), or (e)(2)(iv) of this section.
(i) All spray booths, preparation stations, and mobile enclosures must be fitted with a type of filter technology that is demonstrated to achieve at least 98-percent capture of paint overspray. The procedure used to demonstrate filter efficiency must be consistent with the American Society of Heating, Refrigerating, and Air-Conditioning Engineers (ASHRAE) Method 52.1, ''Gravimetric and Dust-Spot Procedures for Testing Air-Cleaning Devices Used in General Ventilation for Removing Particulate Matter, June 4, 1992'' (incorporated by reference, see § 63.14 of subpart A of this part). The test coating for measuring filter efficiency shall be a high solids bake enamel delivered at a rate of at least 135 grams per minute from a conventional (non- HVLP) air-atomized spray gun operating at 40 pounds per square inch (psi) air pressure; the air flow rate across the filter shall be 150 feet per minute. Owners and operators may use published filter efficiency data provided by filter vendors to demonstrate compliance with this requirement and are not required to perform this measurement. The requirements of this paragraph do not apply to waterwash spray booths that are operated and maintained according to the manufacturer's specifications.
(ii) Spray booths and preparation stations used to refinish complete motor vehicles or mobile equipment must be fully enclosed with a full roof, and four complete walls or complete side curtains, and must be ventilated at negative pressure so that air is drawn into any openings in the booth walls or preparation station curtains. However, if a spray booth is fully enclosed and has seals on all doors and other openings and has an automatic pressure balancing system, it may be operated at up to, but not more than, 0.05 inches water gauge positive pressure.
(iii) Spray booths and preparation stations that are used to coat miscellaneous parts and products or vehicle subassemblies must have a full roof, at least three complete walls or complete side curtains, and must be ventilated so that air is drawn into the booth. The walls and roof of a booth may have openings, if needed, to allow for conveyors and parts to pass through the booth during the coating process.
(iv) Mobile ventilated enclosures that are used to perform spot repairs must enclose and, if necessary, seal against the surface around the area being coated such that paint overspray is retained within the enclosure and directed to a filter to capture paint overspray.

§63.11173(e) (3) All spray-applied coatings must be applied with a high volume, low pressure (HVLP) spray gun, electrostatic application, airless spray gun, airassisted airless spray gun, or an equivalent technology that is demonstrated by the spray gun manufacturer to achieve transfer efficiency comparable to one of the spray gun technologies listed above for a comparable operation, and for which written approval has been obtained from the Administrator. The procedure used to demonstrate that spray gun transfer efficiency is equivalent to that of an HVLP spray gun must be equivalent to the California South Coast Air Quality Management District's ''Spray Equipment Transfer Efficiency Test Procedure for Equipment User, May 24, 1989'' and ''Guidelines for Demonstrating Equivalency with District Approved Transfer Efficient Spray Guns, September 26,

2002'' (incorporated by reference, see § 63.14 of subpart A of this part). The requirements of this paragraph do not apply to painting performed by students and instructors at paint training centers. The requirements of this paragraph do not apply to the surface coating of aerospace vehicles that involves the coating of components that normally require the use of an airbrush or an extension on the spray gun to properly reach limited access spaces; to the application of coatings on aerospace vehicles that contain fillers that adversely affect atomization with HVLP spray guns; or to the application of coatings on aerospace vehicles that normally have a dried film thickness of less than 0.0013 centimeter (0.0005 in.).

§63.11173(e) (4) All paint spray gun cleaning must be done so that an atomized mist or spray of gun cleaning solvent and paint residue is not created outside of a container that collects used gun cleaning solvent. Spray gun cleaning may be done with, for example, hand cleaning of parts of the disassembled gun in a container of solvent, by flushing solvent through the gun without atomizing the solvent and paint residue, or by using a fully enclosed spray gun washer. A combination of non-atomizing methods may also be used.

§63.11173(e) (5) As provided in § 63.6(g), we, the U.S. Environmental Protection Agency, may choose to grant you permission to use an alternative to the emission standards in this section after you have requested approval to do so according to § 63.6(g)(2).

In accordance with §63.11173(g), as required by paragraph (e)(1) of this section, all new and existing personnel at an affected mobile equipment surface coating source, including contract personnel, who spray apply surface coatings, as defined in §63.11180, must be trained by the dates specified in paragraphs (g)(1) and (2) of this section. Employees who transfer within a company to a position as a painter are subject to the same requirements as a new hire.

§ 63.11174 What parts of the General Provisions apply to me?

In accordance with §63.11174(a), Table 1 of this subpart shows which parts of the General Provisions in subpart A apply.

In accordance with §63.11174(b), an owner or operator of an area source subject to this subpart is exempt from the obligation to obtain a permit under 40 CFR part 70 or 71 provided that a permit under 40 CFR 70.3(a) or 71.3(a) is not required for a reason other than becoming an area source subject to this subpart. This permit application and permitting action involve a Permit to Construct, and will not utilize the requirements and procedures in IDAPA 58.01.01.300-399 for the issuance of Tier I operating permits.

§ 63.11175 What notifications must I submit?

In accordance with §63.11175(a), because the facility is a surface coating operation subject to this subpart, the initial notification required by §63.9(b) must be submitted. For this existing operation, the Initial Notification must be submitted no later than on or before March 11, 2011. In accordance with §63.11175(b), because the facility is an existing source, the permittee is not required to submit a separate notification of compliance status in addition to the initial notification specified in paragraph (a) of this subpart provided the permittee was able to certify compliance on the date of the initial notification, as part of the initial notification, and the permittee's compliance status has not since changed. The permittee must submit a Notification of Compliance Status on or before March 11, 2011. The permittee is required to submit the information specified in paragraphs (b)(1) through (4) of this section with the Notification of Compliance Status.

§ 63.11176 What reports must I submit?

In accordance with §63.11176(a), because the permittee is an owner of operator of a mobile equipment surface coating affected source, the permittee is required to submit a report in each calendar year in which information previously submitted in either the initial notification required by §63.11175(a), Notification of Compliance, or a previous annual notification of changes report submitted under this paragraph, has changed. Deviations from the relevant requirements in §63.11173(a) through (d) or §63.11173(e) through (g) on the date of the report will be deemed to be a change. The annual notification of changes report must be submitted prior to March 1 of each calendar year when reportable changes have occurred and must include the information specified in paragraphs (a)(1) through (2) of this section. Because the facility has not proposed to conduct paint stripping operations, the MeCl minimization plan requirements are not applicable.

§ 63.11177 What records must I keep?

In accordance with §63.11177, because the permittee is the owner or operator of a surface coating operation, the permittee must keep the records specified in paragraphs (a) through (d) and (g) of this section. Because the permittee has not proposed to conduct paint stripping operations, the requirements of paragraphs (e) and (f) of this section are not applicable.

§ 63.11178 In what form and for how long must I keep my records?

In accordance with 40 CFR 63.11178(a) because the permittee is the owner or operator of an affected source, the permittee must maintain copies of the records specified in §63.11177 for a period of at least five years after the date of each record. Copies of records must be kept on site and in a printed or electronic form that is readily accessible for inspection for at least the first two years after their date, and may be kept off-site after that two-year period.

§ 63.11179 Who implements and enforces this subpart?

In accordance with §63.11179(a), this subpart can be implemented and enforced by the U.S. Environmental Protection Agency (EPA), or a delegated authority. At the time of this permitting action, the EPA has not delegated authority to the State of Idaho. However, IDAPA 58.01.01.107.03i incorporates by reference all Federal Clean Air Act requirements including 40 CFR 63, Subpart HHHHHH. Therefore, the requirements of this subpart have been placed in the permit.

§ 63.11180 What definitions do I need to know?

Terms used in this subpart are defined in accordance with §63.11180.

8.2.3 NESHAP Subpart XXXXXX Regulatory Review

The spray coating of trailers at Western Trailer is not covered under NESHAP Subpart XXXXXX.

40 CFR Part 63, Subpart XXXXXX NESHAP:	National Emission Standards For Hazardous Air Pollutants Area Source Standards for Nine Metal Fabrication and Finishing Source Categories

§63.11514 Am I subject to the subpart?
(a) You are subject to this subpart if you own or operate an area source that is **primarily engaged in the operations in one of the nine source categories** listed in paragraphs (a)(1) through (9) of this section. Descriptions of these source categories are shown in Table 1 of this subpart. "Primarily engaged" is defined in §63.11522, "What definitions apply to this subpart?"

(1) Electrical and Electronic Equipment Finishing Operations;
(2) Fabricated Metal Products;
(3) Fabricated Plate Work (Boiler Shops);
(4) Fabricated Structural Metal Manufacturing;
(5) Heating Equipment, except Electric;
(6) Industrial Machinery and Equipment Finishing Operations;
(7) Iron and Steel Forging;
(8) Primary Metal Products Manufacturing; and
(9) Valves and Pipe Fittings.

Western Trailer operations, manufacturing heavy truck trailers, is not included in the 9 manufacturing subcategories. Descriptions of potentially similar subcategories are provided below.

The subcategory Fabricated Metal Products is defined as:

> "Establishments primarily engaged in manufacturing **fabricated metal products, such as fire or burglary resistive steel safes and vaults and similar fire or burglary resistive products; and collapsible tubes of thin flexible metal**. Also, establishments primarily engaged in **manufacturing powder metallurgy products, metal boxes; metal ladders; metal household articles, such as ice cream freezers and ironing boards; and other fabricated metal products not elsewhere classified.**" (Table 1 to Subpart XXXXXX of Part 63—Description of Source Categories Affected by This Subpart)

Since Western Trailer does not manufacture these types of products, Western Trailer is not engaged in manufacturing fabricated metal products subject to Subpart XXXXXX.

The subcategory Fabricated Structural Metal Manufacturing is defined as:

> "Establishments primarily engaged in fabricating iron and steel or other metal **for structural purposes, such as bridges, buildings, and sections for ships, boats, and barges**." (Table 1 to Subpart XXXXXX of Part 63—Description of Source Categories Affected by This Subpart)

Since Western Trailer does not manufacture these types of products, Western Trailer is not engaged in fabricated structural metal manufacturing subject to Subpart XXXXXX.

The subcategory Industrial Machinery and Equipment Finishing Operations is defined as:

> Establishments primarily engaged in **construction machinery manufacturing; oil and gas field machinery manufacturing; and pumps and pumping equipment manufacturing**. The **construction machinery manufacturing** industry sector of this source category includes establishments primarily engaged in manufacturing heavy machinery and equipment of types used primarily by the construction industries, **such as bulldozers; concrete mixers; cranes, except industrial plant overhead and truck-type cranes; dredging machinery; pavers; and power shovels**. Also establishments primarily engaged in manufacturing **forestry equipment and certain specialized equipment, not elsewhere classified**, similar to that used by the construction industries, such as **elevating platforms, ship cranes, and capstans, aerial work platforms, and automobile wrecker hoists**. The oil and gas field machinery manufacturing industry sector of this source category includes establishments primarily engaged in manufacturing machinery and equipment for use in oil and gas fields or for drilling water wells, including portable drilling rigs. The pumps and pumping equipment manufacturing sector of this source category includes establishments primarily engaged in manufacturing **pumps and pumping equipment for general industrial, commercial, or household use, except fluid power pumps and motors**. This category includes establishments primarily engaged in manufacturing **domestic water and sump pumps**.

Since Western Trailer does not manufacture these types of products, Western Trailer is not engaged in industrial machinery and equipment finishing operations subject to Subpart XXXXXX.

The subcategory Primary Metal Products Manufacturing is defined as:

> Establishments primarily engaged in manufacturing products such as **fabricated wire products (except springs) made from purchased wire**. These facilities also manufacture **steel balls; nonferrous metal brads and nails; nonferrous metal spikes, staples, and tacks**; and other primary metals products not elsewhere classified.

Since Western Trailer operations do not include manufacturing these types of products, Western Trailer is not engaged in primary metal products manufacturing subject to Subpart XXXXXX.

Western Trailer operations are not subject to Subpart XXXXXX or other 40 CFR Part 63 Subparts.

8.3 Prevention of Significant Deterioration

Western Trailer's operations are not included in the list of 28 Prevention of Significant Deterioration (PSD) source categories with 100 tons/year major source threshold, listed in Table 8-1 below.

Table 8-1 PSD Source Categories

1. Coal cleaning plants (with thermal dryers)	11. Nitric acid plants	22. Chemical process plants
2. Kraft pulp mills	12. Petroleum refineries	23. Petroleum storage and transfer units with a total storage capacity exceeding 300,000 barrels
3. Portland cement plants	13. Lime plants	24. Taconite ore processing plants
4. Primary zinc smelters	14. Phosphate rock processing plants	25. Glass fiber processing plants
5. Iron and steel mills	15. Coke oven batteries	26. Charcoal production plants
6. Primary aluminum ore reduction plants	16. Sulfur recovery plants	27. Fossil fuel-fired steam electric plants of more than 250 million British thermal units (BTU) per hour heat input
7. Primary copper smelters	17. Carbon black plants (furnace process)	28. Fossil-fuel boilers (or combination thereof) totaling more than 250 million BTU/ hour heat input
8. Municipal incinerators capable of charging more than 250 tons of refuse per day	19. Fuel conversion plants	
9. Hydrofluoric acid plants	20. Sintering plants	
10. Sulfuric acid plants	21. Secondary metal production plants	

Therefore, to qualify as a PSD Major Source, the Western Trailer facility must have the Potential to Emit (PTE) greater than 250 tons per year of any NSR regulated pollutant.

Table 5-2 Facility-Wide NSR Regulated Pollutant Emissions lists the NSR regulated pollutant emissions using the proposed processes and materials within the prescribed amounts and limits. NO_2, CO and VOC emissions are the NSR-regulated pollutants with the highest emission rates at the facility. The emissions are estimated to be 3.4 tons per year for NO_2, 2.9 tons per year for CO and 29 tons per year for VOC. Consequently, Western Trailer does not qualify as a PSD Major Source.

9. STATE OF IDAHO REGULATORY REVIEW

9.1 Certification of Documents- 58.01.01.123

Certification of the application documents is provided in Section 9.

9.2 Demonstration of Preconstruction Compliance with Toxic Standards- 58.01.01.210

Emission estimates for the potential non-carcinogenic and carcinogenic Toxic Air Pollutants (TAPs) emitted from the Western Trailer facility are calculated and the results shown in Table 5-5 (above). Except for the 5 TAPs described in Section 7 above, controlled emission rates of TAPs do not exceed ELs.

In an email dated July 28, 2016, IDEQ clarified that controlled emission rates not exceeding TAP ELs may be used to demonstrate compliance without the need to conduct air dispersion modeling, as follows:

> "TAP emissions levels (EL) included in Rules Section 585 and 586 are derived based on generic modeling. If the sum of emissions from new and modified sources is below the EL compliance is demonstrated without the need to conduct site-specific dispersion modeling." The result of this is that compliance has been assured by 210.08 if controlled emissions are below applicable ELs."[26]

Since the results of air dispersion modeling show that the five modeled TAPs do not exceed the AAC or AAAC EL's, and since the controlled emission of other TAPs do not exceed their respective ELs, the requirements of Section 210 are satisfied.

9.3 Ambient Air Quality Standards for Specific Air Pollutants- 58.01.01.577

Emissions estimates for the criteria pollutants emitted from the facility are summarized in Table 6-2 (above). Since all criteria pollutants are less than 10% of the significance threshold, they qualify as Below Regulatory Concern (BRC) and modeling of criteria pollutants is not necessary. Therefore, it is assumed that the ambient concentrations are below the ambient air quality standards specified in 58.01.01.577.

[26] Email correspondence from Kevin Schilling, IDEQ to Chris Johnson, TORF Environmental Management, Re: Modeling Protocol Questions, July 28, 2016.

9.4 Toxic Air Pollutants Non-carcinogenic Increments – 58.01.01.585

See Section 5.3.

9.5 Toxic Air Pollutants Carcinogenic Increments – 58.01.01.586

See Section 5.3.

9.6 New Source Performance Standards – 58.01.01.590

See Section 8.1.

9.7 National Emission Standards for Hazardous Air Pollutants – 58.01.01.591

See Section 8.2.

9.8 Visible Emissions – 58.01.01.625

The facility is subject to this standard and will comply. There are no anticipated sources of visible emissions.

9.9 Rules for Control of Fugitive Dust – 58.01.01.650

The area around the facility buildings are generally paved. There are no stockpiles or vehicle loading, unloading, or transport of unpackaged, dusty materials. Blast cleaning and metal cutting are performed inside buildings.

9.10 Fuel Burning Equipment- Particulate Matter – 58.01.01.675

IDAPA 58.01.01.675 establishes exhaust gas particulate limits for fuel-burning equipment. The definition of "fuel-burning equipment" provided in IDAPA 58.01.01.006.45 is-

> *Any furnace, boiler, apparatus, stack and all appurtenances thereto, used in the process of burning fuel for the primary purpose of producing heat or power by indirect heat transfer.*

Consequently, the regulations IDAPA 58.01.01.676 and IDAPA 58.01.01.677 potentially apply.

9.11 Fuel Burning Equipment- Particulate Matter – 58.01.01.676

IDAPA 58.01.01.676 establishes exhaust gas particulate limits for fuel-burning equipment greater than ten (10) million BTU per hour. Since none of the heaters are greater than 10 million BTU per hour this regulation does not apply.

9.12 Fuel Burning Equipment- Particulate Matter – 58.01.01.677

IDAPA 58.01.01.677 establishes exhaust gas particulate limits for indirect fuel-burning equipment less than ten (10) million BTU per hour. There are 15 indirect-fired natural gas space heaters and each is less than ten (10) million BTU per hour at the Western Trailer facility. Therefore, IDAPA 58.01.01.677 applies.

Estimated natural gas fuel consumption from the largest of these heaters (Blast Building Unit Heaters 300,000 BTU/hr each) is 2.94E-4 million cubic feet per hour (294 cubic feet per hour) (Table 3-5). Estimated PM emissions based on the AP-42 emission factor 7.6 lbs/MMscf is 0.002 lbs. PM per hour. Common low range air to fuel ratio for effective combustion of natural gas is 8.5 parts air to fuel[27], the amount of air and fuel would be 8.5+1, or 9.5 parts air and fuel for each part fuel. Since the heater would burn 294 cubic feet fuel per hour, 0.002 lbs PM would be emitted with 2,793 cubic feet of flue gas, or 7.2 E-7 lbs/cubic foot. At 7,000 grains per lb., 0.005 grains/cubic foot is emitted. Since this is less than the PM standard .015 gr/dscf, this largest unit complies.

Estimated natural gas fuel consumption from all of the indirect heaters is 2.25E-3 million cubic feet per hour (2,250 cubic feet per hour). Estimated PM emissions from all of these heaters running at full nameplate rating is 0.017 lbs. PM per hour. As above, the amount of air and fuel would be 8.5+1, or 9.5 parts air and fuel for each part fuel. Since the heaters would burn 2,250 cubic feet fuel per hour, 0.017 lbs PM would be emitted with 21,375 cubic feet of flue gas, or 8.0 E-7 lbs/cubic foot. At 7,000 grains per lb., 0.0056 grains/cubic foot is emitted. Since this is less than the PM standard .015 gr/dscf, emissions from all of the units complies.

9.13 Standards for Minor and Existing Sources – 58.01.01.677

See Section 9.12.

9.14 Particulate Matter- Process Weight Limitation – 58.01.01.700

In accordance with Table 5-3, the estimated 24-hr averaged particulate emission rate at the prescribed levels of operation and production is 0.40 lb/hr.

In accordance with IDAPA 58.01.01.701.01.a (for units starting up after October 1. 1979):

Allowable Particulate Emissions, $E = 0.045(PW)^{0.60}$

The minimum Process Weight that will demonstrate compliance can be calculated:

[27] http://www.engineeringtoolbox.com/fuels-air-flue-gas-d_170.htm

E_{actual} = 0.40 lb/hr particulate = $0.045(PW_{minimum})^{0.60}$
Minimum PW = 3.71 lbs./hr.

Process Weight includes the weight of all material entering the source. In Western Trailers' case, process weight includes the weight of the steel cut and welded, in addition to the materials used for abrasive cleaning, painting, and welding. The weight of these materials exceeds the compliance minimum of 1.19 lb/hr. Therefore, the facility meets the standards listed in IDAPA 58.01.01.701.

10. CERTIFICATION

I hereby certify that based upon information and belief formed after reasonable inquiry, the statements and information in the document are true, accurate and complete.

J M Whitehead	President
(printed name)	(title)
	3/oct/16
(signature)	(date)

Appendix A

Equipment Specifications & Vendor Correspondence

PAINT SHOP

Reznor Mercer, PA, USA 16137

Model: RDF2-120 Dec. 2002

Serial #: BBL72K2N20413VAMV9 10.00 HP

460 Volts 3 PH 60 HZ Maximum Total Input 15.4 AMPS

Type of Gas: Natural W.D. 187136

Maximum Input:	1500000	BTU/HR
Minimum Input:	30000	BTU/HR
Normal Manifold Pressure:	4.2	IN. W. C.
Min Permissable Gas Pres.	9.33	IN. W. C.
Maximum Gas Inlet Supply Pressure	5	LBS
Minimum Gas Inlet Supply Pressure	9.3	IN. W. C.

This unit is equipped for operation at an air flow of 12000 SCFM against an external static press. Of 0.6 IN µ. C. See Manufacturer's instructions for other air flow capacities.

PAINT SHOP

Reznor Mercer, PA, USA 16137

Model: RDF2-120 May 1998

Serial #: AXE67K2N13759VAMV9 10.00 HP

460 Volts 3 PH 60 HZ Maximum Total Input 15.4 AMPS

Type of Gas: Natural W.D. 184415

Maximum Input:	1426000	BTU/HR
Minimum Input:	30000	BTU/HR
Normal Manifold Pressure:	3.8	IN. W. C.
Min Permissable Gas Pres.	8.9	IN. W. C.
Maximum Gas Inlet Supply Pressure	5	LBS
Minimum Gas Inlet Supply Pressure	8.9	IN. W. C.

This unit is equipped for operation at an air flow of 12000 SCFM against an external static press. Of 1.4 IN µ. C. See Manufacturer's instructions for other air flow capacities.

PAINT SHOP - Quantity 2

Viking - On top of the Paint Shop

ANS Z83.4 (1995) Direct Make-up Air Heater

Max. BTU Per Hour:	2,800,000
Req. BTU Per Hour:	2,000,000
AMPS 240 / 480-3-60:	208-3-60 30 AMPS
AMPS 120V-1-60:	10 AMPS
Type of Fuel:	Natural Gas
Mdel Number:	1600 / 2800
Serial Number:	973489B
Minimum Gas Supply Pressure:	14" W.C.
Minimum Heater Gas Inlet Pressure:	3" W.C.
Maximum Heater Gas Inlet Pressure:	7" W. C.

REZNOR®

DIRECT FIRED HEATING & MAKEUP AIR CATALOG

COMMERCIAL/INDUSTRIAL HEATERS AND MAKEUP AIR SYSTEMS

FUEL

- Natural Gas
- Propane

CAPACITIES

- 20 - 3,000 MBH
- 1,000 - 28,000 CFM

AIR CONTROLS

- 100% O/A w/Constant Air Volume
- 100% O/A w/Variable Air Volume
- Combination O/A - R/A w/Constant Air Volume

Visit www.RezSpec.com for more information.

Form C-RDF (Version G)

BACKGROUND

Reznor was founded in 1888 to manufacture the “Reznor” reflector heater, which used a luminous flame gas burner developed by George Reznor. This technological breakthrough was an immediate success and hastened the expansion of gas heating in residential and commercial applications. Technological development and innovation have been the hallmark of Reznor products through the years. The development of the forced air gas unit heater, the modular Thermocore® heat exchanger, and the high-efficiency, sealed-draft Venturion® unit heater have kept Reznor products at the forefront of technological advances in commercial and industrial gas heating. As a result of this pioneering role in the heating, makeup air, and ventilating equipment field, the products offered today are the most advanced in engineering design to satisfy a wide variety of applications.

FACILITIES

Reznor heaters were first manufactured and sold in Mercer, Pennsylvania (70 miles north of Pittsburgh) in 1888. Over the years, the company has grown and expanded. Today, with sales worldwide, Reznor products are being manufactured at six different facilities throughout North America and Europe.

PRODUCT SCOPE

Well-equipped engineering laboratories for both product development and testing can be found at many of the manufacturing sites. All domestic lab sites are agency approved.

Reznor Products include a complete line of heating, makeup air and ventilating systems, using gas, oil, hot water/steam, or electric heat sources. Reznor heater catalogs are designed to aid the engineer, architect or contractor in specifying the correct equipment for all standard and special applications. Complete data is presented on unit heaters, duct furnaces, infrared heaters, makeup air systems, pre-engineered custom-designed systems, and evaporative cooling modules. Consult your local Reznor Sales Representative for further assistance in specifying Reznor Equipment for your specific application.

SERVICES

Product service requirements are handled through contractors and/or distributors, with backup from local representatives and factory-based service team. Replacement parts inventories for both warranty and non-warranty requirements are maintained at service centers throughout the country and at the manufacturing facilities.

REZNOR®

Thomas&Betts

REZNOR DIRECT FIRED HEATING AND MAKEUP AIR EQUIPMENT CATALOG

Contents

MODEL RDF 2
DIRECT-FIRED SYSTEMS 2
TECHNICAL DATA 2
DESCRIPTION 3
STANDARD FEATURES 3
OPTIONAL FEATURES - FACTORY INSTALLED 4
OPTIONAL FEATURES - FIELD INSTALLED 4
DIMENSIONS 4
AIR PRESSURE DROPS 5
EQUIPMENT SELECTION 6
RPM/BHP CHARTS 7
AIR CONTROL OPTIONS 8
MANIFOLD ARRANGEMENTS 9
SAMPLE SPECIFICATIONS 10
MODEL ADF/ADFH 11
DIRECT-FIRED SYSTEMS 11
TECHNICAL DATA 11
ADF/ADFH 300 AND 500 12
DESCRIPTION 12
STANDARD FEATURES 12
ADF/ADFH 300 AND 500 13
OPTIONAL FEATURES - FACTORY INSTALLED: 13
OPTIONAL FEATURES - FIELD INSTALLED: 13
DIMENSIONS 13
ADF/ADFH 300 AND 500 14
ADF/ADFH 700 AND 1200 15
DESCRIPTION 15
STANDARD FEATURES 15
ADF/ADFH 700 AND 1200 16
OPTIONAL FEATURES - FACTORY INSTALLED 16
OPTIONAL FEATURES - FIELD INSTALLED 16
DIMENSIONS 16
ADF/ADFH 700 AND 1200 17
AIR PRESSURE DROPS 18
BLOWER CHART 19
BURNER SELECTION TABLE 23
GAS INPUT RATE VS. TEMPERATURE RISE AND CFM 23
GAS MANIFOLD SELECTIONS 25
MINIMUM INLET GAS PRESSURE 25
SAMPLE SPECIFICATIONS 26
GENERAL DIRECT FIRED DATA AND ACCESSORIES INFORMATION 28
INPUT RATE VS CFM AND TEMPERATURE RISE 28
GAS CONTROL OPTIONS 29
REMOTE CONTROL CONSOLES 31
ROOF CURB FOR MODEL RDF 32
DISCONNECT SWITCHES 33
INLET AIR ACCESSORIES 33
FILTER CABINETS AND WEATHERHOODS 33
ADF/ADFH SCREENED OUTSIDE AIR HOOD 34
RDF SCREENED OUTSIDE AIR HOOD 34
RDF INDOOR FILTER CABINET 34
MOTOR FULL LOAD AMPS (F.L.A.) TABLES 35
REZNOR PRODUCT LIMITED WARRANTY 37

REZNOR®

MODEL RDF
DIRECT-FIRED SYSTEMS

- Eight Sizes - 1-20, 1-40, 1-50, 1-65, 2-80, 2-120, 3-180, 3-260
- Horizontal Configuration with Full Curb Cap Base
- Horizontal or Vertical (down) Discharge
- Indoor/Outdoor Installation
- 100% Outside Air with Constant Volume
  - 100% Outside Air with Variable Volume
  - Combination Outside Makeup Air/Inside Air Heating with Constant Air Volume
  - Combination Outside Makeup Air/Inside Air Heating with Potentiometer for Automatic Building Pressurization
- Electronically Controlled Discharge Air Temperature
- Remote Console for Controls
- C.S.A. Certified to the latest editions of ANSI Standards
  - ANSI Z83.18 Recirculating Direct Gas-Fired Industrial Air Heater
  - ANSI Z83.4 - CSA 3.7 Non-recirculating Direct Gas-Fired Industrial Air Heater

NOTE: Due to ongoing product development, all specifications in this catalog are subject to change without notice.

TECHNICAL DATA

Model Number		1-20	1-40	1-50	1-65	2-80	2-120	3-180	3-260
Maximum Heating Capacity	MBH	400	600	750	750	1500	1500	2500	3000
	kW	117	176	220	220	440	440	733	879
Air Volume Range	CFM	1000/3000	2000/4500	3000/6000	4000/6500	6000/12000	9000/16000	11000/20000	16000/28000
	M^3/hr	1700/5100	3400/7650	5100/10200	6800/11050	10200/20400	15300/27200	18700/34000	27200/47500
Maximum Temperature Rise	°F	120	120	120	120	120	120	120	120
	°C	55	55	55	55	55	55	55	55
Supply Voltage		115/1	115/1	115/1	230/1	208/3	208/3	208/3	208/3
Control Amps (110V)		6.0	6.0	6.0	3.0	3.4	3.4	3.4	3.4
Gas Connection (inches)		1	1	1	1	1 or 1-1/4	1 or 1-1/4	1, 1-1/4, or 2	1, 1-1/4, or 2
Net Weight	lbs.	915	925	935	950	1455	1505	2410	2480
	kg	415	420	424	431	660	683	1093	1125

IMPORTANT: Specifications are subject to change without notice. This guide is intended to provide specifications and technical information only.

This guide is not intended to be an instruction manual. When installing heating and ventilating equipment, you must check and conform to all local and national building codes. Improper installation of heating and ventilating equipment could be dangerous. Consult the manufacturer's installation manual for instructions and important warnings.

REZNOR®

MODEL RDF

INDOOR/OUTDOOR DIRECT-FIRED GAS HEATING/MAKEUP AIR SYSTEM FOR COMMERCIAL & INDUSTRIAL APPLICATIONS

Model RDF

ANSI Z83.4 Non-Recirculating Industrial Air Heaters
ANSI Z83.18 Recirculating Industrial Air Heaters

CSA 3.7

WARNING: GAS-FIRED APPLIANCES ARE NOT DESIGNED FOR USE IN HAZARDOUS ATMOSPHERES CONTAINING FLAMMABLE VAPORS OR COMBUSTIBLE DUST, OR ATMOSPHERES CONTAINING CHLORINATED OR HALOGENATED HYDROCARBONS. INSTALLATIONS IN PUBLIC GARAGES OR AIRPLANE HANGARS ARE PERMITTED WHEN IN ACCORDANCE WITH ANSI Z223.1 AND NFPA 54 CODES.

RDF Models are not approved for residential use.

DESCRIPTION

The Reznor Model RDF Series single-blower, direct, gas-fired units are certified by C.S.A. to ANSI Standard Z83.18 and Z83.4, CSA 3.7. The units are designed for indoor or outdoor installation with cabinets of insulated, double-wall galvalume steel construction. Configuration is horizontal with either standard horizontal discharge or optional vertical discharge. The system is factory assembled and mounted on a curb cap for single unit field installation. The RDF Series has a heating range of 20 - 3,000 MBH and an air handling capability range of 1,000 - 28,000 CFM.

The blower section includes a single blower that is statically and dynamically balanced for vibration free operation. Depending on the model size and CFM requirements, the blower is either Class I or Class II. A selection of motor horsepower and drive packages is available to match application requirements. Motor and drive packages include an IEC style contactor or starter, adjustable motor base, adjustable sheaves, and drive belts.

The direct-fired burner is cast iron with drilled ports and stainless steel mixing plates for high efficiency combustion, designed to meet ANSI emission requirements. The pilot and flame monitoring device is an electronic (hot surface) ignition system and flame supervision with 100% lockout. Burner firing rate is modulated by a temperature selector and sensor to maintain the desired discharge air temperature.

The gas train includes main and pilot gas shutoff valves, a manual shutoff leak-test valve, a pilot regulator, a pilot solenoid valve, and either dual solenoid valves or fluid power valves, depending on the application requirements that determine gas train selection. Gas trains meet ANSI Standards, and options are available to meet FM and /or GAP requirements.

STANDARD FEATURES

Standard controls include a high and low airflow proving switches, automatic and manual high temperature limit controls, burner and blower service switches. A remote console control, a disconnect switch, a space override thermostat, a potentiometer, or a pressure sensing damper control device are all available as options or components of the air control option selected. Systems installed outdoors MUST include either an outside air hood or a Model REC evaporative cooling module.

- C.S.A. certified to ANSI Z83.18 and Z83.4 - C.S.A. 3.7
- Unit mounted electronic circuit board with diagnostic lights
- 100% makeup air
- 20 - 3,000 MBH Heating range
- 1,000 - 28,000 CFM range
- Double-wall, insulated industrial grade construction
- Horizontal configuration with horizontal discharge.
- Dynamically balanced centrifugal blower
- NEMA standard motor, IEC contactor (1/2 - 3 HP) or starter (5 - 30 HP)
- Adjustable belt drive
- Electronic modulated cast-iron burner with stainless steel mixing plates.
- Electronic modulating gas control (25:1 turndown ratio)
- Hot surface intermittent ignition system with prepurge time delay (U.S. Patent No. 5,556,272)
- 24-volt Transformer (fused secondary)
- Adjustable outside air temperature sensor (economizer)
- Safety limit controls including high and low air flow proving switches, automatic and manual high temperature limits, flame supervisor with 100% lockout
- Gas train with dual main solenoid valves, main and pilot manual shutoff valves, manual shutoff leak-test valve, pilot regulator, and pilot solenoid valve
- Burner and blower service switches

REZNOR®

MODEL RDF

INDOOR/OUTDOOR DIRECT-FIRED GAS HEATING/MAKEUP AIR SYSTEM FOR COMMERCIAL & INDUSTRIAL APPLICATIONS

OPTIONAL FEATURES - Factory Installed

- Propane gas
- Manifold arrangements to meet FM and GAP requirements
- Motor and drive options to meet CFM requirements.
- Discharge air temperature gas control systems with and without space override
- 230/1, 208/3, 230/3, 460/3, 575/3 voltage alternates
- High ambient burner cutout control
- Combination makeup air-return air with constant or variable air volume supply controlled either by a manually set potentiometer or automatically by a remote building pressure sensor
- 2-position discharge damper
- Vertical (down) discharge with or without 2-position discharge damper.
- 115-volt convenience outlet
- Built-in lighted indicator panel
- Firestat(s) - discharge and/or return, 200°F
- Freezestat (automatic reset) with time delay relay
- Interlocking and/or control relays
- High and/or low gas pressure switches

OPTIONAL FEATURES - Field Installed

- Disconnect switch
- Screened outside air hood with moisture-eliminating louvers with or without filter section and 1” or 2” permanent filters (screened air hood or attached evaporative cooling module is required on outdoor installations to retain certification)
- Indoor filter sections with 1” or 2” permanent filters
- Roof curb - 16” high - with internal ductwork
- Add-on evaporative cooling module is available (see Evaporative Cooling Catalog)
- Remote control console

DIMENSIONS

+ or - 1/8” (3mm)

Dimensions (inches)												
Model Sizes	**A**	**B**	**C**	**D**	**E**	**F**	**G**	**H**	**J**	**K**	**L**	**M**
1-20-3, 1-40-3, 1-50-3, 1-65-3	88	37 1/8	44 3/16	84 13/16	45 1/2	24 1/2	10 1/2	5 7/16	14 9/32	15 5/8	21 29/32	19 1/8
2-80-3, 2-120-3	88	48 11/16	68 1/4	84 13/16	69 1/2	52	16 1/4	5 5/16	10 15/16	15 1/2	27 9/32	27 7/32
3-180-3, 3-260-3	135 3/4	61 5/8	82 9/16	132 9/16	83 1/8	64 9/16	19 1/16	5 5/32	13 13/32	21 5/8	37	37 3/32
Model Sizes	**N**	**P**	**Q**	**R**	**S**	**T**	**U**	**V**	**W**	**X**	**Y**	**Z**
1-20-3, 1-40-3, 1-50-3, 1-65-3	7 11/16	14 5/8	12 5/8	31 1/8	31 1/8	21 3/4	18 3/4	7 3/4	5 1/4	13 1/8	8 9/16	42 7/32
2-80-3, 2-120-3	16 5/16	24 21/32	11 7/32	55 3/16	42 5/8	27 1/4	27 1/4	16 5/32	6 11/32	15 3/32	8 3/4	48 15/16
3-180-3, 3-260-3	14 9/16	31 9/16	7 7/16	67 1/8	55 9/16	36 3/4	36 3/4	14 7/16	4	20 7/8	8 11/16	56
Dimensions (mm)												
Model Sizes	**A**	**B**	**C**	**D**	**E**	**F**	**G**	**H**	**J**	**K**	**L**	**M**
1-20-3, 1-40-3, 1-50-3, 1-65-3	(2,235)	(943)	(1,122)	(2,154)	(1,156)	(622)	(267)	(138)	(363)	(397)	(556)	(486)
2-80-3, 2-120-3	(2,235)	(1,237)	(1,734)	(2,154)	(1,765)	(1,321)	(413)	(135)	(278)	(394)	(693)	(691)
3-180-3, 3-260-3	(3,448)	(1,565)	(2,097)	(3,367)	(2,111)	(1,640)	(484)	(131)	(341)	(549)	(940)	(942)
Model Sizes	**N**	**P**	**Q**	**R**	**S**	**T**	**U**	**V**	**W**	**X**	**Y**	**Z**
1-20-3, 1-40-3, 1-50-3, 1-65-3	(195)	(371)	(321)	(791)	(791)	(552)	(476)	(197)	(133)	(333)	(217)	(1,072)
2-80-3, 2-120-3	(414)	(626)	(285)	(1,402)	(1,083)	(692)	(692)	(410)	(161)	(383)	(222)	(1,243)
3-180-3, 3-260-3	(370)	(802)	(189)	(1,705)	(1,411)	(933)	(933)	(367)	(102)	(530)	(221)	(1,422)

REZNOR®

MODEL RDF

INDOOR/OUTDOOR DIRECT-FIRED GAS HEATING/MAKEUP AIR SYSTEM FOR COMMERCIAL & INDUSTRIAL APPLICATIONS

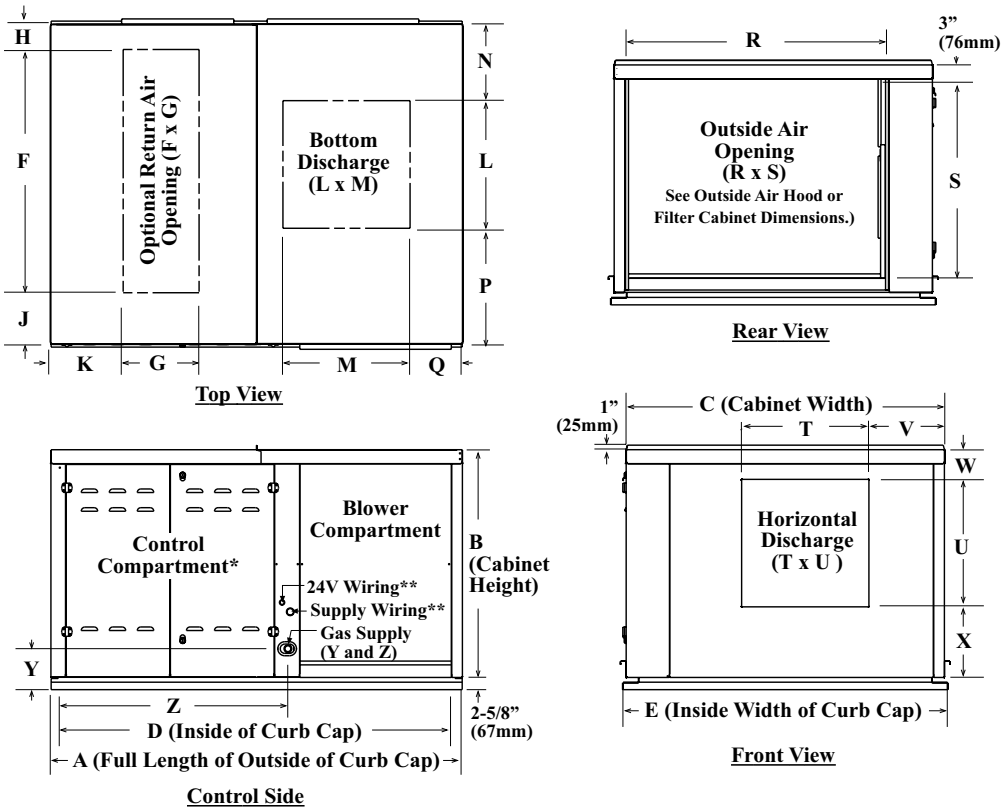

**RDF-2 and RDF-3 have double hinged doors as illustrated. Control compartment on RDF-1 has a single hinged door.*
*** Configuration shown is for RDF-2 and RDF-3. The supply connection on an RDF-1 is above the control wiring connection.*

Air Pressure Drops

		System Pressure Drop (" w.c.)[1]					
Model	CFM	1" Filter Pressure Drop[2]	2" Filter Pressure Drop[2]	O/A Inlet Hood Pressure Drop	Discharge Damper Pressure Drop[3]	External Static Pressure[4]	Total Adjusted Pressure Drop[1]
RDF-1	1,000	0.05	0.10	0.15	0.04		
	2,500	0.10	0.20	0.22	0.06		
	4,000	0.15	0.30	0.29	0.10		
	5,500	0.20	0.40	0.37	0.16		
	6,500	0.25	0.50	0.45	0.22		
RDF-2	6,000	0.05	0.10	0.15	0.04		
	8,000	0.09	0.18	0.21	0.07		
	10,000	0.13	0.26	0.27	0.10		
	12,000	0.17	0.34	0.33	0.13		
	14,000	0.21	0.42	0.40	0.18		
	16,000	0.25	0.50	0.47	0.24		
RDF-3	10,000	0.05	0.10	0.14	0.04		
	13,000	0.08	0.16	0.18	0.06		
	16,000	0.11	0.22	0.22	0.09		
	19,000	0.14	0.28	0.27	0.12		
	22,000	0.17	0.34	0.33	0.15		
	25,000	0.20	0.40	0.39	0.18		
	28,000	0.23	0.46	0.46	0.22		

[1] To enter the RPM/BHP chart, the "Total Adjusted Pressure Drop" must be determined. The "Total Adjusted Pressure Drop" is determined by adding the external pressure from ducts, registers, grilles and diffusers, to the pressure drop for selected options.
[2] There will be different pressure drops for filters other than 1" or 2" permanent filters provided.
[3] When a discharge damper or variable air volume unit is required, add in this pressure drop.
[4] The External Pressure Drop should include all duct work, registers, grilles, and diffusers at required CFM.

Blower Notes: Models RDF 1-20, 1-40, 1-50, 1-65, 2-120 have a Class I blower. Model RDF 2-80 has a Class II blower. Depending on the CFM/Static/RPM/HP requirements (see Chart on page 8), Models RDF 3-180 and 3-260 have either a Class I blower or a Class II blower. A Class II blower is an available option on Models RDF 3-180 and 3-260 equipped with a standard Class I blower.
A Class I blower is a standard blower with permanently lubricated cartridge ball bearings. A Class II blower is a heavy duty blower with pillow block bearings. The pillow block bearings have a grease fitting and should be lubricated twice a year with a high temperature, moisture-resistant grease.
Units with a 7-1/2 or 1 HP motor have a heavy duty triangular bearing support; units with a 15 to 30 HP motor have a heavy duty angle iron bearing support.

REZNOR®

MODEL RDF
EQUIPMENT SELECTION

Selection of Makeup Air Equipment

1. Determine makeup air CFM based on
- Total exhaust CFM - either from rating plates of exhaust equipment or measured
- Infiltration CFM = (Building volume in square feet x the desired air rate change) / 60
- Type (negative or positive) of building or "spot" pressure desired
  - For negative pressure - add the exhaust CFM and the infiltration CFM and multiply by <1 (usually .9)
  - For positive pressure - add the exhaust CFM and the infiltration CFM and multiply by >1 (usually 1.1)

2. Determine makeup air BTUH based on
   - H = Q x K x ΔT
   - H = Heat output of the makeup air equipment
   - Q = Required makeup air CFM (as determined in Step 1)
   - K = Constant of 1.085
   - ΔT = Discharge air temperature minus outdoor design temperature (also identified as the temperature rise)
   - To determine BTUH input, divide H by .92.

3. Calculate the Total Adjusted Pressure Drop. With the CFM and pressure drop, determine the HP from the chart.

4. With this information, determine which size of system will most efficiently provide the required CFM and BTUH. Select the options that meet the specification requirements.

Capacity Schedule						[2]Minimum Air Flow Over Burner (Burner Length)									
						CFM (M^3/hr)									
Model	Air Volume Range CFM (M^3/hr)	Heating Range MBH (kW)	Fan Diameter inches[1]	Min/Max HP	RPM Range	6"	12"	18"	24"	30"'	36"	42"	48"	54"	60"
RDF-1-20	1000/3000	20-400	10 x 10	0.5 / 2.0	730/1600	800	1000	N/A	N/A	N/A	N/A	N/A	N/A	N/A	N/A
	(1700/5100)	(6-117)				(1359)	(1699)								
RDF-1-40	2000/4500	30-600	12 x 12	0.75 / 5.0	630/1500	800	1000	1250	N/A	N/A	N/A	N/A	N/A	N/A	N/A
	(3400/7650)	(9-176)				(1359)	(1699)	(2124)							
RDF1-50	3000/6000	38-750	15 x 15	1.0 / 5.0	570/1200	800	1000	1250	N/A	N/A	N/A	N/A	N/A	N/A	N/A
	(5100/10200)	(11-220)				(1359)	(1699)	(2124)							
RDF-1-65	4000/6500	38-750	18 x 18	1.5 / 5.0	425/900	1000	1000	1250	N/A	N/A	N/A	N/A	N/A	N/A	N/A
	(6800/11050)	(11-220)				(1699)	(1699)	(2124)							
RDF-2-80	6000/12000	75-1500	18 x 18	2.0 / 15.0	500/1140	1500	1500	1500	1500	1750	2000	N/A	N/A	N/A	N/A
	(10200/20400)	(22-440)				(2548)	(2548)	(2548)	(2548)	(2973)	(3398)				
RDF-2-120	9000/16000	75-1500	20 x 20	2.0 / 15.0	480/1000	2250	2250	2250	2250	2250	2250	N/A	N/A	N/A	N/A
	(15300/27200)	(22-440)				(3823)	(3823)	(3823)	(3823)	(3823)	(3823)				
RDF-3-180	11000/20000	100-2500	22 x 22	5.0 / 30.0	470/1000	2750	2750	2750	2750	2750	2750	2750	2750	2750	3000
	(18700/34000)	(29-733)				(4672)	(4672)	(4672)	(4672)	(4672)	(4672)	(4672)	(4672)	(4672)	(5097)
RDF-3-260	16000/28000	150-3000	30 x 22	7.5 / 30.0	300/660	4000	4000	4000	4000	4000	4000	4000	4000	4000	4000
	(27200/47500)	(44-879)				(6796)	(6796)	(6796)	(6796)	(6796)	(6796)	(6796)	(6796)	(6796)	(6796)

[1] Check the shaded areas in RPM/BHP chart, page 8, for Class I or Class II blowers. Class II blowers are standard on Model RDF-2-80.
[2] Minimum CFM over the burner increases with increases in CFM. Minimum CFM over the burner must be the amount listed on the chart or 25% of actual supply CFM, whichever is greater.

REZNOR®

MODEL RDF

RPM/BHP CHARTS

Model	CFM	Total Adjusted Pressure Drop (" w.c.)												
		0.0	0.2	0.4	0.6	0.8	1.0	1.2	1.4	1.6	1.8	2.0	2.2	2.4
RDF-1-20	1000	735/0.16	840/0.23	N/A	N/A	N/A	N/A	N/A	N/A	N/A	N/A	N/A	N/A	N/A
	1500	745/0.29	850/0.36	950/0.45	1050/0.54	N/A	N/A	N/A	N/A	N/A	N/A	N/A	N/A	N/A
	2000	850/0.49	945/0.61	1050/0.72	1125/0.83	1205/0.95	1285/1.08	1365/1.21	N/A	N/A	N/A	N/A	N/A	N/A
	2500	945/0.83	1015/0.94	1100/1.05	1180/1.17	1250/1.30	1325/1.43	1400/1.57	1460/1.73	1520/1.88	1580/2.04	1635/2.18	N/A	N/A
	3000	1080/1.38	1155/1.49	1225/1.59	1300/1.75	1375/1.90	1445/2.06	1510/2.22	N/A	N/A	N/A	N/A	N/A	N/A
RDF-1-40	2000	630/0.39	730/0.49	N/A	N/A	N/A	N/A	N/A	N/A	N/A	N/A	N/A	N/A	N/A
	2500	665/0.55	740/0.68	825/0.81	895/0.94	965/1.05	N/A	N/A	N/A	N/A	N/A	N/A	N/A	N/A
	3000	735/0.83	820/1.00	890/1.19	955/1.36	1025/1.54	1100/1.72	1155/1.89	N/A	N/A	N/A	N/A	N/A	N/A
	3500	790/1.18	855/1.34	925/1.52	990/1.71	1055/1.90	1115/2.10	1175/2.30	1225/2.49	1280/2.66	1330/2.75	N/A	N/A	N/A
	4000	845/1.63	910/1.78	960/1.94	1030/2.10	1095/2.33	1150/2.57	1200/2.82	1250/3.06	1330/3.30	1345/3.52	1385/3.74	1430/3.96	1480/4.18
	4500	N/A	965/2.53	1020/2.71	1075/2.88	1130/3.06	1180/3.23	1230/3.43	1280/3.65	1325/3.87	1365/4.11	1410/4.36	1450/4.60	N/A
RDF-1-50	3000	570/0.66	660/0.82	735/0.99	N/A	N/A	N/A	N/A	N/A	N/A	N/A	N/A	N/A	N/A
	3500	595/0.82	665/0.99	740/1.21	805/1.40	N/A	N/A	N/A	N/A	N/A	N/A	N/A	N/A	N/A
	4000	615/1.04	685/1.26	745/1.48	810/1.71	875/1.93	930/2.14	N/A	N/A	N/A	N/A	N/A	N/A	N/A
	4500	640/1.43	705/1.61	770/1.80	825/2.02	880/2.26	935/2.50	985/2.74	1035/3.00	N/A	N/A	N/A	N/A	N/A
	5000	710/1.91	760/2.09	815/2.30	870/2.54	920/2.78	965/3.04	1015/3.30	1065/3.60	1110/3.90	1155/4.21	N/A	N/A	N/A
	5500	745/2.32	790/2.56	840/2.81	885/2.94	935/3.28	985/3.59	1030/3.89	1075/4.21	1120/4.52	1165/4.81	N/A	N/A	N/A
	6000	785/2.86	825/3.08	870/3.30	915/3.61	965/3.93	1010/4.26	1055/4.56	1100/4.84	N/A	N/A	N/A	N/A	N/A
RDF-1-65	4000	425/0.69	505/0.96	N/A	N/A	N/A	N/A	N/A	N/A	N/A	N/A	N/A	N/A	N/A
	4500	440/0.94	520/1.15	585/1.37	N/A	N/A	N/A	N/A	N/A	N/A	N/A	N/A	N/A	N/A
	5000	450/1.10	530/1.41	595/1.70	650/1.99	N/A	N/A	N/A	N/A	N/A	N/A	N/A	N/A	N/A
	5500	500/1.51	565/1.56	625/2.07	675/2.36	725/2.69	N/A	N/A	N/A	N/A	N/A	N/A	N/A	N/A
	6000	510/1.78	570/2.06	630/2.36	680/2.69	730/3.04	775/3.39	820/3.74	N/A	N/A	N/A	N/A	N/A	N/A
	6500	525/2.04	580/2.36	635/2.69	685/3.02	735/3.39	780/3.78	830/4.18	860/4.58	N/A	N/A	N/A	N/A	N/A
Model	CFM	Total Adjusted Pressure Drop (" w.c.)												
		0.0	0.2	0.4	0.6	0.8	1.0	1.2	1.4	1.6	1.8	2.0	2.2	2.4
RDF-2-80	6000	510/1.62	570/1.87	630/2.15	680/2.45	730/2.76	775/3.08	820/3.40	N/A	N/A	N/A	N/A	N/A	N/A
	7000	545/2.20	585/2.50	640/2.80	690/3.10	740/3.46	785/3.82	835/4.18	865/4.54	900/4.91	N/A	N/A	N/A	N/A
	8000	565/2.87	610/3.25	650/3.65	700/4.05	750/4.45	795/4.85	845/5.24	875/5.62	910/6.00	945/6.38	980/6.76	1020/7.14	1055/7.50
	9000	605/3.99	640/4.31	675/4.63	715/4.95	760/5.37	805/5.79	855/6.21	885/6.63	920/7.06	955/7.50	990/8.00	1030/8.50	1065/9.00
	10000	N/A	N/A	705/5.82	745/6.24	780/6.66	815/7.08	865/7.50	895/8.00	930/8.50	965/9.00	1000/9.50	1040/10.00	1075/10.64
	11000	N/A	N/A	N/A	770/7.38	805/7.88	845/8.43	880/8.97	910/9.51	945/10.05	975/10.67	1010/11.29	1050/11.91	1085/12.53
	12000	N/A	N/A	N/A	N/A	N/A	875/10.43	905/10.97	935/11.50	970/12.00	1000/12.59	1030/13.13	1060/13.67	1095/14.22
RDF-2-120	9000	520/2.71	560/2.95	600/3.41	640/3.85	680/4.29	720/4.73	N/A	N/A	N/A	N/A	N/A	N/A	N/A
	10000	545/3.56	580/3.92	615/4.28	655/4.64	695/5.00	735/5.50	775/6.00	810/6.50	N/A	N/A	N/A	N/A	N/A
	11000	575/4.18	605/4.64	635/5.14	670/5.68	710/6.20	750/6.72	785/7.24	820/7.71	855/8.13	885/8.55	915/8.97	N/A	N/A
	12000	615/5.75	635/6.13	660/6.51	695/6.89	735/7.27	770/7.74	800/8.30	835/8.86	865/9.42	895/10.00	925/10.64	950/11.28	980/11.92
	13000	640/6.49	660/6.97	695/7.45	725/7.97	760/8.49	790/9.01	820/9.53	850/10.05	880/10.71	910/11.37	935/12.03	965/12.69	990/13.35
	14000	680/6.49	705/8.85	735/9.25	760/9.65	785/10.05	815/10.65	840/11.25	870/11.85	900/12.45	925/13.05	955/13.65	980/14.25	N/A
	15000	N/A	740/10.94	760/11.36	785/11.88	810/12.40	840/12.92	865/13.44	895/13.96	920/14.48	945/15.00	N/A	N/A	N/A
	16000	N/A	N/A	790/13.03	815/13.49	840/13.95	865/14.41	890/14.87	920/15.47	N/A	N/A	N/A	N/A	N/A
Model	CFM	Total Adjusted Pressure Drop (" w.c.)												
		0.0	0.2	0.4	0.6	0.8	1.0	1.2	1.4	1.6	1.8	2.0	2.2	2.4
RDF-3-180	11000	490/3.90	530/4.30	565/4.70	605/5.10	640/5.74	680/6.38	715/7.02	N/A	N/A	N/A	N/A	N/A	N/A
	12000	505/4.50	545/5.00	580/5.56	615/6.14	650/6.72	690/7.30	725/7.81	755/8.25	N/A	N/A	N/A	N/A	N/A
	13000	530/5.44	565/5.98	595/6.52	630/7.60	665/7.60	700/8.22	735/8.84	765/9.47	795/10.11	825/10.75	N/A	N/A	N/A
	14000	550/6.23	585/6.86	615/7.50	645/8.16	680/8.82	710/9.48	745/10.14	775/10.84	805/11.54	835/12.26	860/12.98	890/13.70	N/A
	15000	580/7.81	610/8.43	640/9.05	670/9.68	700/10.33	730/10.99	760/11.65	790/12.31	815/12.97	845/13.64	870/14.32	900/15.00	925/15.67
	16000	600/9.06	630/9.72	660/10.40	690/11.10	715/11.80	745/12.50	780/13.20	810/13.92	835/14.64	860/15.41	890/16.23	915/17.06	940/17.90
	17000	N/A	655/11.44	685/12.10	710/12.76	740/13.42	765/14.10	790/14.78	820/15.53	845/16.35	870/17.17	900/17.99	925/18.81	950/19.63
	18000	N/A	N/A	705/13.98	735/14.66	760/15.40	780/16.20	805/17.00	830/17.80	855/18.60	880/19.40	910/20.20	935/21.00	960/21.80
	19000	N/A	N/A	730/16.14	755/16.90	780/17.66	800/18.44	825/19.22	850/20.00	875/20.80	900/21.60	920/22.40	945/23.20	970/24.00
	20000	N/A	N/A	N/A	775/19.20	800/20.00	820/20.74	845/21.48	865/22.22	890/22.96	910/23.70	935/23.60	955/25.19	980/25.99
RDF-3-260	16000	320/4.38	350/5.00	380/5.64	410/6.28	435/6.93	460/7.58	490/8.25	N/A	N/A	N/A	N/A	N/A	N/A
	17000	325/4.89	355/5.58	385/6.30	415/7.02	440/7.75	465/8.49	493/9.24	505/10.00	N/A	N/A	N/A	N/A	N/A
	18000	330/5.60	360/6.36	390/7.12	420/7.91	445/8.74	470/9.58	496/10.38	510/11.14	540/11.90	N/A	N/A	N/A	N/A
	19000	335/6.20	365/7.00	395/7.81	423/8.63	448/9.45	472/10.28	498/11.22	515/12.16	542/13.10	560/14.14	580/15.00	N/A	N/A
	20000	345/6.96	375/7.78	405/8.60	425/9.44	450/10.28	475/11.24	500/12.22	520/13.20	545/14.18	565/15.16	585/16.14	605/17.12	N/A
	21000	355/7.80	385/8.60	410/9.40	430/10.20	455/11.16	480/12.12	503/13.08	525/14.04	547/15.00	567/15.95	587/16.85	610/17.69	625/18.62
	22000	N/A	395/9.59	415/10.50	440/11.50	460/12.50	485/13.50	505/14.50	530/15.45	550/16.35	570/17.25	590/18.16	615/19.08	630/20.00
	23000	N/A	400/10.50	420/11.50	445/12.50	465/13.50	490/14.50	510/15.50	535/16.50	555/17.50	575/18.50	595/19.50	617/20.50	635/21.50
	24000	N/A	405/11.75	430/12.75	450/13.75	475/14.75	495/15.75	515/16.75	540/17.75	560/18.75	580/19.75	600/20.80	620/21.90	640/23.02
	25000	N/A	N/A	440/14.00	460/15.00	480/16.00	500/17.00	520/18.00	545/19.00	562/20.00	582/21.10	602/22.20	622/23.32	642/24.44
	26000	N/A	N/A	450/15.00	470/16.16	490/17.34	510/18.52	530/19.70	550/20.81	565/21.85	585/22.89	605/23.94	625/25.00	645/26.08
	27000	N/A	N/A	N/A	475/17.50	495/18.50	515/19.50	535/20.62	555/21.86	570/23.11	590/24.37	610/25.54	630/26.62	647/27.70
	28000	N/A	N/A	N/A	485/19.05	505/20.20	525/21.40	540/22.60	560/23.80	580/25.00	595/26.10	615/27.20	635/28.32	650/29.44

NOTE: Model RDF-2-80 has Class II type blowers as standard.
NOTE: Shaded areas require Class II type blowers.

REZNOR®

MODEL RDF
AIR CONTROL OPTIONS

100% Makeup Air with Constant Air Volume

The most common method of makeup air, this arrangement provides a constant volume of outside air to match a constant amount of exhaust. It is most commonly used to match a specific process such as a kitchen range hood or an industrial process which might be used on an intermittent basis. **Option AR1**.

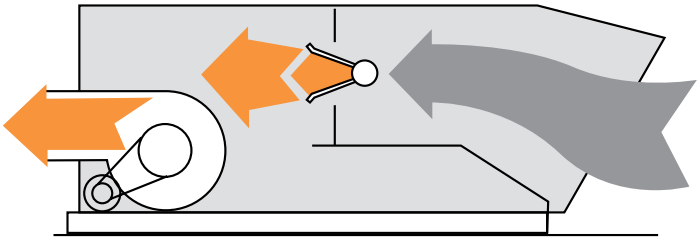

100% Makeup Air with Variable Air Volume

This arrangement is used to supply general makeup air to a space which has varying amounts of exhaust. A building pressure sensor controls the amount of makeup air supplied, to slightly pressurize the building even though exhaust systems may operate intermittently. The elimination of the need to heat excess amounts of makeup air and the reduction in blower motor power consumption make this system the most efficient system available. **Options AR19, AR20, AR33, or AR36.**

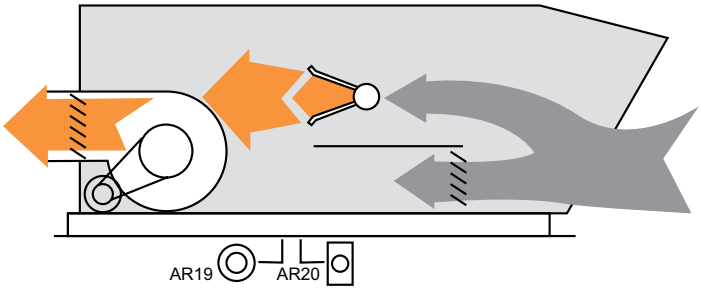

Combination Outside/Inside Makeup Air Heating with Constant Air Volume

This system fulfills a combination of requirements by matching the required makeup air while supplying supplemental heating for worker comfort. The ability of this design to provide varying amounts of makeup air, while using return air for supplemental heating, allows the elimination of inefficient supplemental space heating equipment. **Options AR22, AR23, AR34 or AR37.**

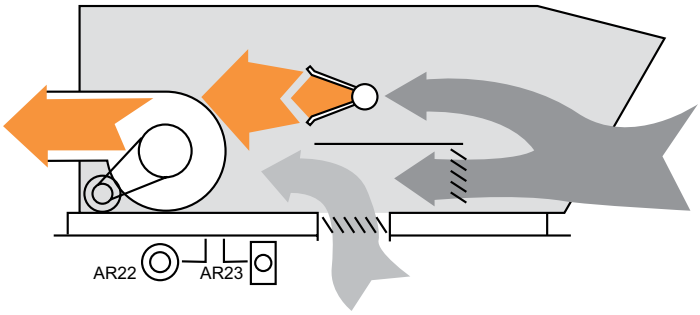

Option	Description
AR1	100% O/A Makeup — Constant Supply Air Volume, Horizontal Discharge (for bottom discharge, order AQ1 or AQ3)
AR19	100% outside air with variable supply air volume (minimum 25% rated air supply). Discharge and bypass dampers with modulating actuators. Control of discharge damper from a manually set (0-135 ohm) potentiometer. Potentiometer shipped separately.
AR20	100% outside air with variable supply air volume (minimum 25% rated air supply). Discharge and bypass dampers with modulating actuators. Control of discharge damper from a remotely located pressure sensor. Pressure null switch shipped separately.
AR22	Combination outside makeup and return air (maximum 75% return air). Outside air bypass, and return air dampers with modulating actuators. Control of return air damper from a manually set potentiometer. Potentiometer shipped separately.
AR23	Combination outside makeup and return air (maximum 75% return air). Outside air bypass, and return air dampers with modulating actuators. Control of return air damper from a remotely located pressure sensor. Pressure null switch shipped separately.
AR33	100% Outside air with variable supply air volume (minimum 25% rated air supply). Discharge and bypass dampers with modulating actuators. Control of discharge damper from a field-supplied 0-10 VDC or 4-25 milliamp signal (specify when ordering).
AR34	Combination outside makeup and return air (maximum 75% return air). Outside air bypass, and return air dampers with modulating actuators. Control of return air damper from a field-supplied 0-10 VDC or 4-20 milliamp signal (specify when ordering).
AR36	100% outside air with variable supply air volume (minimum 25% rated air supply). Discharge and bypass dampers with modulating actuators. Control of discharge damper from a remotely located photohelic pressure sensor. Photohelic pressure sensor shipped separately.
AR37	Combination outside makeup and return air (maximum 75% return air). Outside air bypass, and return air dampers with modulating actuators. Control of return air damper from a remotely located photohelic pressure sensor. Photohelic pressure sensor shipped separately.

REZNOR®

MODEL RDF
MANIFOLD ARRANGEMENTS

MANIFOLD ARRANGEMENTS

(Includes: Main and Pilot Manual Shut-off Valves; Main and Pilot Pressure Regulators; Pilot Solenoid Valve)

ALL MANIFOLDS ARE CERTIFIED TO ANSI / CSA / FM / GAP*

SIZE			1-20	1-40	1-50	1-65	2-80	2-120	3-180	3-260
BM75	½ psi maximum gas pressure rated manifold with manual pressure regulator, redundant main gas valves and two manual shutoff valves. For use with AG1 or AG3 gas valves **up to 750 MBH**. (1" npt)	AG1, AG3 Only	√	√	√	√	√	√	√	√
BM76	½ psi maximum gas pressure rated manifold with manual pressure regulator, redundant main gas valve, Maxitrol electronic modulating valve and two manual shutoff valves. For use with AG30-AG48, AG51 modulating gas control options **up to 1000 MBH**. (1" npt)	AG30 to AG48, AG51	√	√	√	√	√	√	√	√
BM78	2 psi maximum gas pressure rated manifold with manual pressure regulator, two main gas solenoid valves, Maxitrol electronic modulating valve, high gas pressure safety switch and two manual shutoff valves. For use with AG30-AG48, AG51 modulating gas control options **up to 1000 MBH**. (1" npt)	AG30 to AG48, AG51	√	√	√	√	√	√	√	√
BM79	2 psi maximum gas pressure rated manifold with two main gas solenoid valves, Maxitrol electronic modulating/regulating valve, high gas pressure safety switch and two manual shutoff valves. For use with AG30-AG48, AG51 modulating gas control options **up to 2500 MBH**. (1 1/4 npt)	AG30 to AG48, AG51	■	■	■	■	√	√	√	√
BM80	5 psi maximum gas pressure rated manifold with "proof-of-closure valve-seal overtravel protection" fluid power valve, Maxitrol electronic modulating/regulating valve, high gas pressure safety switch and two manual shutoff valves. For use with AG30-AG48, AG51 modulating gas control options **up to 2500 MBH**. (1 1/4" npt)	AG30 to AG48, AG51	■	■	■	■	√	√	√	√
BM81	5 psi maximum gas pressure rated manifold with "proof-of-closure valve-seal overtravel protection" fluid power valve, Maxitrol electronic modulating/regulating valve, high gas pressure safety switch and two manual shutoff valves. For use with AG30-AG48, AG51 modulating gas control options **up to 3000 MBH**. (2" npt)	AG30 to AG48, AG51	■	■	■	■	■	■	■	√

***GAP.4.3.1 (Global asset protection) guidelines are the former IRI guidelines that changed early in 2002.**

■ = Not Available

√ = Available

Minimum Supply Gas Pressure ("w.c.) for Full Fire														
Manifold Option	**BM75**				**BM76**		**BM78**		**BM79**		**BM80**		**BM81**	
with Gas Control Option	**AG1**		**AG3**		**AG 30, 31, 32, 33, 35, 36, 37, 47, 48, or 51**		**AG 30, 31, 32, 33, 35, 36, 37, 47, 48, or 51**							
Manifold Size	**1"**		**1"**		**1"**		**1"**		**1-1/4"**		**1-1/4"**		**2"**	
MBH	Nat	Pro	Nat	Pro	Nat	Pro	Nat	Pro	Nat	Pro	Nat	Pro	Nat	Pro
250	4.0	1.4	4.0	-	4.1	1.6	4.4	1.6	4.6	1.6	4.5	1.6	5.1	1.8
500	5.3	1.9	5.0	-	5.8	2.3	6.0	2.3	5.2	1.9	5.0	1.7	5.3	1.9
750	7.5	2.7	6.8	-	8.5	3.3	8.4	3.3	6.1	2.3	5.7	2.0	5.5	1.9
1000	-	-	-	-	12.4	4.7	11.7	4.6	7.4	2.8	6.7	2.4	5.8	2.1
1250	-	-	-	-	-	-	-	-	9.1	3.5	8.0	2.9	6.2	2.2
1500	-	-	-	-	-	-	-	-	11.2	4.3	9.6	3.5	6.6	2.4
1750	-	-	-	-	-	-	-	-	13.6	5.3	11.5	4.2	7.2	2.6
2000	-	-	-	-	-	-	-	-	16.5	6.3	13.7	5.0	7.8	2.8
2500	-	-	-	-	-	-	-	-	23.3	8.9	18.9	7.0	9.4	3.4
3000	-	-	-	-	-	-	-	-	-	-	-	-	11.3	4.1

REZNOR®

MODEL RDF
SAMPLE SPECIFICATIONS

GENERAL

Provide a direct fired makeup air/heating unit Model RDF as manufactured as a Reznor brand by Thomas & Betts Corporation. The unit shall be designed to meet the standards for direct-fired gas heating equipment as developed by (the American National Standards Institute [ANSI Z83.4 for non-recirculating industrial air heaters] [ANSI Z83.18) (the Canadian Standards Association CSA 3.7) for recirculating industrial air heaters].

Provide with output capacities as shown on drawings. Units shall be fueled by (natural/propane) gas.

The unit(s) shall be supplied by a manufacturer with no less than 20 years experience in building direct fired products. Manufacturer shall have certifying agency approved laboratory for testing of such products. The unit(s) must be supplied by an ISO 9001 registered manufacturer.

The unit shall be shipped in one (1) piece from the factory completely wired and piped, with the exception of remote control devices, O/A weatherhoods, filter cabinets and roof curbs.

CABINET

The cabinet shall be of double-wall construction with 1 inch, 1½ lb. density insulation. The construction material used shall be galvalume steel for high corrosion resistance. The unit shall be fully weatherized for outdoor or indoor mounting. All gas and electrical controls shall be mounted in fully weatherized control compartments with hinged or easily removable doors. All removable access panels shall have pocket handles for ease of handling.

The model RDF-(-) by Reznor shall provide ( ) CFM at ( ) in external static pressure. The unit shall provide ( ) BTUH with a temperature rise of ( ) °F and a final air temperature of ( ) °F.

FEATURES

The unit shall be provided with the following features:

A 115 volt and a 24 volt transformer shall be provided for gas, safety and electrical controls. All remote wiring and controls shall be 24 volt. A motor with adjustable drive shall be included. Motors ½ through 3 hp shall be provided with internal overloads and a motor (contactor), (starter with 3 leg protection). All motors 5 hp and larger shall be provided with a motor starter with 3 leg protection.

Burner shall be cast iron with stainless steel mixing plates. CONTROLS

CONTROLS

Gas safety controls shall be provided to meet (ANSI), (FM), (GAP1) requirements and will include a flame safeguard relay with flame sensing. Automatic and manual high temperature limits are to be provided at the discharge of the unit and a high temperature safety located at the burner. (Provide firestats at the supply (and return air). (Provide a Freezestat at the discharge of the unit.) Ignition shall be by an electronically controlled hot surface intermittent ignition system with a ceramic ignitor.

The unit shall be provided with (100% outside air, constant volume), 100% outside air, variable volume), (outside and recirculation air, constant volume). The velocity of air over the burner must always remain constant and at no time shall recirculated air pass over the burner. High and low air velocity safety pressure switches shall be provided to protect against low or high air flow over the burner.

The gas temperature controls shall be electronic with accuracy to ± 0.2°F. The nominal turndown ratio shall be 25:1 with total control between high and low fire. The unit shall be provided with prepurge time delay and arranged for positive low-fire start-up. The temperature controls shall be (discharge air control from 55°F-90°F with an adjustable space override), (adjustable discharge air reset from space temperature). The system shall be resetable from a remote temperature selector mounted on the remote control console. An adjustable outside air controller shall be provided to sense the outdoor air temperature and shut-off the burner if the outdoor temperature exceeds the setpoint on the control.

The unit shall include burner, blower (and damper) service switches (diagnostic analyzer board) in the electrical compartment. A remote operating console shall be provided with a system switch, burner and blower lights, a safety lockout light and a remote temperature selector.

Provide the following accessories:

(a) Outside air weatherhood (with moisture eliminators).

(b) Filter cabinet for indoor units.

(c) Roof curb.

(d) Weatherized fused disconnect switch.

If specification includes evaporative cooling, add a Reznor Model REC to the RDF Direct-Fired Packaged Makeup Air System. (See Evaporative Cooling Catalog).

REZNOR®

NOTICE:

The information contained on the following page(s) was produced prior to May 1, 2014. On that date Reznor became part of Nortek, Inc.

References to any other company affiliations are no longer valid.

This manual refers to Reznor brand products that have been discontinued for more than 10 years.
Some replacement parts may no longer be available from our suppliers. Compatible parts may be substituted.

Please contact your Reznor Representative with specific questions.

©2014 Reznor, LLC. All Rights Reserved.
Trademark notice: Reznor is registered in at least the United States.
0514 PDF Form Cover2

Model FT
Gas-Fired, Power-Vented Unit Heaters

REZNOR®

INSTALLATION FORM RZ-NA-I-FT
Obsoletes Form RGM 433 (Version G)

APPLIES TO: Installation/Operation/Service

Models FT 30, 45, and 60 are certified for residential and commercial/industrial installations.
Models FT 75-300 are certified for commercial/industrial installations.

Table of Contents

Installation and Operation ..... Paragraphs 1-20 ..... Pages 1-13
Check Installation and Start-Up ..... Paragraph 21 ..... Pages 14-15
Service/Maintenance/Troubleshooting ..... Paragraphs 22-33 ..... Pages 16-20

Index	Page No.
Burner Air Restrictor	13
Burner Orifices	17
Burner Removal	16
Burners	13
Check Installation and Start-Up	14
Circuit Board	11
Circuit Board LED Codes	11, 19
Clearances	3
Combustion Air	3
Combustion Air Proving Switch	13
Condensation	8
Confined Space	3
Dimensions	5
Downturn Nozzles (Option Kit)	2
Electrical Supply and Connections	11
Fan	17
Fan Motor	11
Flame Rollout Switch	18
Gas Piping and Pressures	9
Gas Valve	13
General	1
Hazard Intensity Levels	1
Heat Exchanger	17
High Altitude Combustion Air Pressure Switches	2, 11
High Altitude Operation	2
Ignition System	13, 17
Installation Codes	2
Left Side Controls	4
Limit Control	18
Location (Heater)	3
Louvers, Vertical (Option Kit)	2
Maintenance	16
Service	16
Suspending	4
Thermostat	11
Troubleshooting	19
Uncrating and Preparation	2
Vent System	18
Venter Motor	17
Venting	6
Warranty	2
Wiring Diagrams	12

REFERENCE: **Replacement Parts, Form RZ-NA-P-FT/SFT**
Gas Conversion Form, RZ-NA-I-FT/SFT-GC

FOR YOUR SAFETY

What to do if you smell gas:

- **Do not try to light any appliance.**
- **Do not touch any electrical switch; do not use any phone in your building.**
- **Immediately call your gas supplier from a neighbor's phone. Follow the gas supplier's instructions.**
- **If you cannot reach your gas supplier, call your fire department.**

WARNING: Improper installation, adjustment, alteration, service, or maintenance can cause property damage, injury, or death. Read the installation, operation, and maintenance instructions thoroughly before installing or servicing this equipment.

FOR YOUR SAFETY

Do not store or use gasoline or other flammable vapors and liquids in the vicinity of this or any other appliance.

HAZARD INTENSITY LEVELS

1. **DANGER: Failure to comply will result in severe personal injury or death and/or property damage.**
2. **WARNING: Failure to comply could result in severe personal injury or death and/or property damage.**
3. **CAUTION: Failure to comply could result in minor personal injury and/or property damage.**

General

Installation should be done by a qualified agency in accordance with the instructions in this manual and in compliance with all codes and requirements of authorities having jurisdiction. The instructions in this manual apply to the unit heater model shown below.

Model	Type	Fuel	Vent	Air Delivery
FT	Indoor, Suspended Unit Heater	Gas-Fired	Power	Propeller Fan

IMPORTANT: If your heater Model No. has a suffix -LN or -CV, **do not** use the venting instructions in this manual. Follow the instructions in Form RZ-433-CV/LN to install a Model FT30-CV, FT45-CV, or FT45-LN heater.

General (Cont'd)

Model FT heaters are design-certified by the Canadian Standards Association (CSA) to ANSI Z83.8a and CGA 2.6a for industrial/commercial installations in the United States and Canada. Models FT 30, 45 and 60 are approved by the Canadian Standards Association to IAS 10-96 for residential installations in both the United States and Canada. All heaters are available for use with either natural or propane gas. The type of gas, the firing rate, and the electrical characteristics are on the unit rating plate.

WARNING: Gas-fired appliances are not designed for use in hazardous atmospheres containing flammable vapors or combustible dust, in atmospheres containing chlorinated or halogenated hydrocarbons, or in applications with airborne silicone substances. See Hazard Levels, Page 1.

WARNING: Should overheating occur, or the gas supply fail to shut off, shut off the manual gas valve to the appliance before shutting off the electrical supply.

WARNING: Do not use this appliance if any part has been under water. Immediately call a qualified service technician to inspect the appliance and replace any gas control which has been under water.

1. Installation Codes

These units must be installed in accordance with local building codes. In the absence of local codes, in the United States, the unit must be installed in accordance with the National Fuel Gas Code (latest edition). A Canadian installation must be in accordance with the CAN/CGA B149.1 and B149.2 Installation Code for Gas Burning Appliances and Equipment. These codes are available from CSA Information Services, 1-800-463-6727. Local authorities having jurisdiction should be consulted before installation is made to verify local codes and installation procedure requirements.

Special Commercial Installations (Aircraft Hangars/Repair Garages/Parking Garages)

Installations in aircraft hangars should be in accordance with ANSI/NFPA No. 409 (latest edition), Standard for Aircraft Hangars; in public garages in accordance with ANSI/NFPA No. 88A (latest edition), Standard for Parking Structures; and for repair garages in accordance with ANSI/NFPA No. 88B (latest edition), Standard for Repair Garages. ANSI/NFPA-88 (latest edition) specifies overhead heaters must be installed at least eight feet above the floor. In Canada, installations in aircraft hangars should be in accordance with the requirements of the enforcing authorities, and in public garages in accordance with CAN/CGA B149 codes.

ANSI/NFPA 409 (latest edition) specifies a clearance of ten feet to the bottom of the heater from the highest surface of the top of the wing or engine enclosure of whatever aircraft would be the highest to be housed in the hangar, and a minimum clearance of eight feet from the floor in other sections of aircraft hangars, such as the offices, and shops which communicate with areas used for servicing or storage. The heaters must be located so as to be protected from damage by aircraft or other objects such as cranes and movable scaffolding. In addition, the heaters must be located so as to be accessible for servicing, adjustment, etc.

2. Warranty

Refer to the limited warranty information on the Warranty Card in the "Owner's Envelope".

Warranty is void if ...

a. Wiring is not in accordance with the diagram furnished with the heater.
b. The unit is installed without proper clearance to combustible materials.
c. The heater is connected to a duct system or if the air delivery system is modified.

3. Uncrating and Preparation

This unit was test operated and inspected at the factory prior to crating and was in operating condition. If the heater has incurred any damage in shipment, document it with the transporting agency and contact your Reznor distributor.

Check the rating plate for the gas specifications and electrical characteristics of the heater to be sure that they are compatible with the gas and electric supplies at the installation site.

Read this booklet and become familiar with the installation requirements of your particular heater. If you do not have knowledge of local requirements, check with the local gas company or any other local agencies who might have requirements concerning this installation.

Before beginning, make preparations for necessary supplies, tools, and manpower. If the installation includes optional vertical louvers or a downturn nozzle, install these options before the heater is suspended. Follow the instructions included in the option package; option packages are shipped separately.

4. High Altitude Operation

If the heater is being installed in an altitude above 2000 ft (610M), check the rating plate to determine what must be done to prepare the heater for high altitude operation.

NOTE: A heater equipped with a two-stage valve must be factory-built for high altitude installation.

Check the rating plate, determine which circumstance below applies, and follow the instructions.

- *If* the altitude range on the rating plate **agrees with the altitude at the site**, no further action is required. Proceed with the installation.
- *If* the altitude range on the rating plate **reads "Sea Level" and the altitude at the site is between 2000 ft and 6000 ft (610M to 1830M)** ***and*** **the heater has a single-stage gas valve**, install the heater and follow the instructions in Paragraph 12 to derate by manifold gas pressure adjustment.
- *If* the altitude range on the rating plate **reads "Sea Level" and the altitude at the site is above 6000 ft (1830M)** ***and*** **the heater has a single-stage gas valve**, in addition to adjusting the manifold pressure, it will be necessary to replace the combustion air pressure switch. Order the appropriate switch from the list below and replace the switch before suspending the heater.

  After the heater is installed, follow the instructions in Paragraph 12 to derate by adjusting the manifold gas pressure.

High Altitude Combustion Air Pressure Switches

FT	P/N	Description
30	164674	Blue Label, -.10", #PPS10027-2733
45-60	164675	Brown Label, -.17", #PPS10027-2734
75-200	149879	Orange Label, -.50", #PPS10027-2355
250-300	151372	White Label, -.74", #PPS10027-2406

Figure 1 - Pressure Switch Location (above 6000 ft, replace with a pressure switch set for high altitude operation)

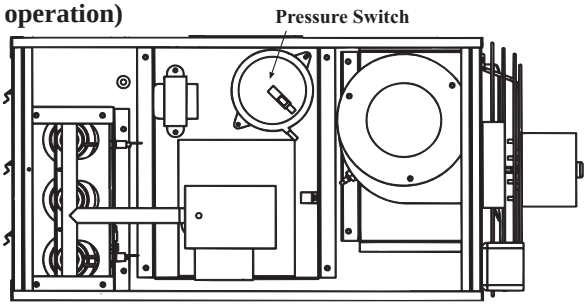

5. Clearances and Combustion Air

Units must be installed so that the clearances in the table are provided for combustion air space, inspection and service, and for proper spacing from combustible construction. Clearance to combustibles is defined as the minimum distance from the heater to a surface or object that is necessary to ensure that a surface temperature of 90°F above the surrounding ambient temperature is not exceeded.

Required Clearances - inches and millimeters						
Model Sizes	30, 45, 60, 75		100, 125, 150, 200		250, 300	
	inches	mm	inches	mm	inches	mm
Top	1	25	6	152	6	152
Flue Connector	6	152	6	152	6	152
Access Panel	18	457	24	610	24	610
Non-Access Side	1	25	6	152	6	152
Bottom*	1	25	1	25	1	25
Rear	18	457	18	457	24	610

*A Model FT 30, 45, 60, 75 installed in a residential garage must be installed a minimum clearance above the floor of 18 inches (457mm). Sizes 100-300 are not certified for residential installation.

This fuel-burning heater must be supplied with the air that enters into the combustion process and is then vented to the outdoors. Sufficient air must enter the equipment location to replace that exhausted through the heater vent system. In the past, the infiltration of outside air assumed in heat loss calculations (one air change per hour) was assumed to be sufficient. However, current construction methods using more insulation, vapor barriers, tighter fitting and gasketed doors and windows, weatherstripping, and/or mechanical exhaust fans may now require the introduction of outside air through wall openings or ducts.

The requirements for combustion and ventilation air depend upon whether the unit is located in a confined or unconfined space. An "unconfined space" is defined as a space whose volume is not less than 50 cubic feet per 1000 BTUH of the installed appliance. **Under all conditions**, enough air must be provided to ensure there will not be a negative pressure condition within the equipment room or space. For specific requirements for confined space installation, see Paragraph 6.

WARNING: These power-vented unit heaters are designed to take combustion air from the space in which the unit is installed and are not designed for connection to outside combustion air intake ducts. Connecting outside air ducts voids the warranty and could cause hazardous operation. See Hazard Levels, Page 1.

6. Combustion Air Requirements for a Heater Located in a Confined Space

Do not install a unit in a confined space without providing wall openings leading to and from the space. Provide openings near the floor and ceiling for ventilation and air for combustion as shown in Figure 2, depending on the combustion air source as noted in Items 1, 2, and 3 below.

Add total BTUH of all appliances in the confined space and divide by figures below for square inch free area size of each (top and bottom) opening.

Figure 2 - Confined Space: A space whose volume is less than 50 cubic feet per 1000 BTUH of the installed appliance input rating

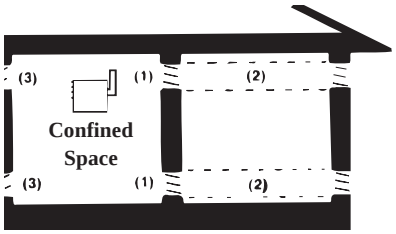

1. Air from inside the building -- openings 1 square inch free area per 1000 BTUH. Never less than 100 square inches free area for each opening. See (1) in Figure 2.

2. Air from outside through duct -- openings 1 square inch free area per 2000 BTUH. See (2) in Figure 2.

3. Air direct from outside -- openings 1 square inch free area per 4000 BTUH. See (3) in Figure 2.

NOTE: For further details on supplying combustion air to a confined space, see the National Fuel Gas Code ANSI Z223.1a (latest edition).

7. Unit Heater Location

Suspend the heater so that it is a minimum of five feet (1.5M) above the floor. Other clearances are listed in Paragraph 5.

WARNING: If touched, the vent pipe and certain internal heater surfaces that are accessible from outside the heater will cause burns. Suspend the heater a minimum of 5' (1.5M) above the floor.

For best results, the heater should be placed with certain rules in mind. In general, a unit should be located from 8 to 12 feet (2.4-3.7M) above the floor. Units should always be arranged to blow toward or along exposed wall surfaces, if possible. Where two or more units are installed in the same room, a general scheme of air circulation should be maintained for best results.

Suspended heaters are most effective when located as close to the working zone as possible, and this fact should be kept in mind when determining the mounting heights to be used. However, care should be exercised to avoid directing the discharged air directly on the room occupants.

Partitions, columns, counters, or other obstructions should be taken into consideration when locating the unit heater so that a minimum quantity of airflow will be deflected by such obstacles.

When units are located in the center of the space to be heated, the air should be discharged toward the exposed walls. In large areas, units should be located to discharge air along exposed walls with extra units provided to discharge air in toward the center of the area.

At those points where infiltration of cold air is excessive, such as at entrance doors and shipping doors, it is desirable to locate the unit so that it will discharge directly toward the source of cold air from a distance of 15 to 20 feet (4.6-6.1M).

CAUTION: Do not locate the heater where it may be exposed to water spray, rain or dripping water.

8. Left Side Controls

All units are factory built with controls on the right side (as viewed when facing the heater discharge). If the installation location requires that the controls be on the left side, follow the steps below to change the control side.

1. **Turn the heater over (180°)**. Turn so that the sides are opposite but the front and rear remain the same. (Notice that the "bottom" panel, which is now on the top of the heater, has four suspension holes.)
2. **Reverse the Louver Position** -- Remove the screws holding the louver frame. Turn the louver assembly (180°). Reinstall the assembly so that the louvers will direct the air downward with the heater in its new position.
3. **Sizes 60, 75, 100, 125, 150, 200, 250 and 300; Move the Ignitor** -- Remove the control access panel. On the side of the burner rack, remove the screws holding the spark ignitor and the flame sensor. Interchange the locations of the ignitor and the flame sensor so that the ignitor will be toward the bottom of the burner rack. **IMPORTANT: The brown ground wire *must* stay with the spark ignitor.**
4. Turn the access panel so that the labels are in an upright position. Re-attach the panel (NOTE: Illustrations of the control section, except for the location of the ignitor and the flame sensor on Sizes 60-300, will appear to be upside down.)

9. Suspending the Heater

Before suspending the heater, check the supporting structure to be used to verify that it has sufficient load-carrying capacity to support the weight of the unit.

Net Weight										
Size	30	45	60	75	100	125	150	200	250	300
lbs	60	66	84	90	140	145	205	215	258	280
kg	27	30	38	41	64	66	93	98	117	127

When the heater is lifted for suspension, support the bottom of the heater with plywood or other appropriately placed material. If the bottom is not supported, damage could occur.

Determine the type of suspension to be used:

- **All Sizes** - The heater is equipped with 4-pt suspension. Two 3/8"-16 nut retainers are located on each side of the heater. See Dimensions in Paragraph 10 and illustration in Figure 3A.
- **Sizes 30, 45, 60, and 75** may be installed with 2-pt suspension. Follow the illustrated instructions in Figure 3B.
- **Sizes 30, 45, 60, and 75** may be suspended with an optional ceiling suspension kit. Refer to Figure 3C. Step-by-step instructions are included with the option kit.

WARNING: Suspend any size of Model FT heater only from the threaded nut retainers (Figure 3A). Or, suspend a Size 30, 45,60, or 75 as illustrated in Figure 3B or using the Ceiling Suspension Kit in Figure 3C. Do not suspend from the heater cabinet panels.

WARNING: Unit must be level for proper operation. Do not place or add additional weight to the suspended heater. Hazard Levels, page 1.

***Be sure* that the 3/8" threaded hanger rods are locked to the heater as illustrated. Recommended maximum hanger rod length is 6 feet.**

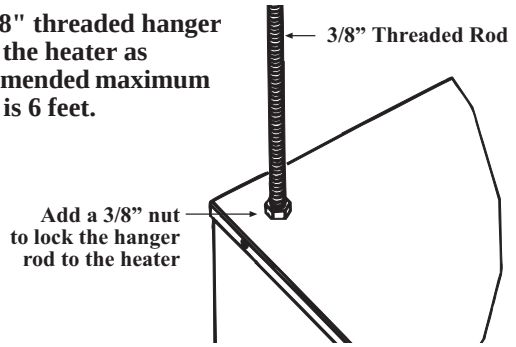

Figure 3A - Four-point suspension on all sizes; attach threaded rods to all four nut retainers

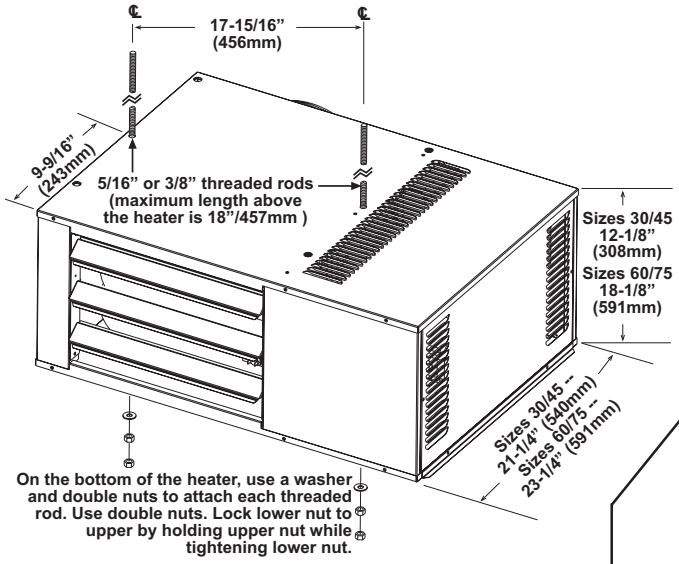

Figure 3B - Two-point suspension applies to Models FT 30, 45, 60, and 75

Figure 3C - Ceiling Suspension Kit, Option CK22, for Models FT 30, 45, 60, or 75

When suspending, use a minimum of two anchor points per angle.

NOTES: Quantity of screws used to attach the suspension angles will vary by heater size and from front to rear of cabinet. If optional vertical louvers are being added, install louvers after suspension angles are attached.

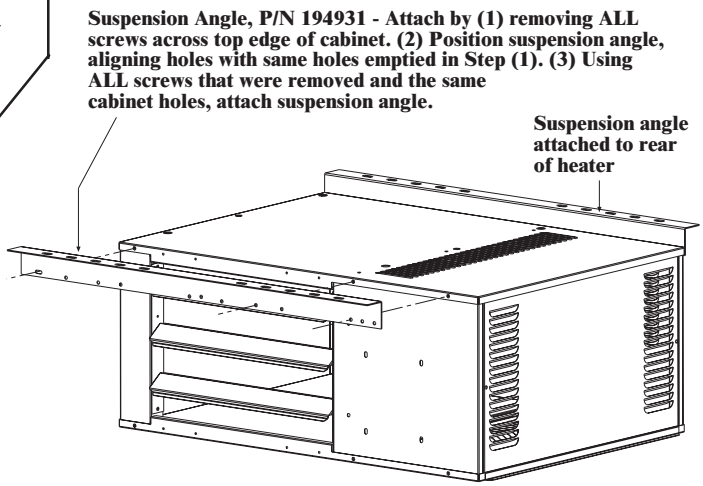

10. Dimensions

Model FT Dimensions (inches and mm)

Figure 4

NOTE: Composite drawings are not proportional for all sizes.

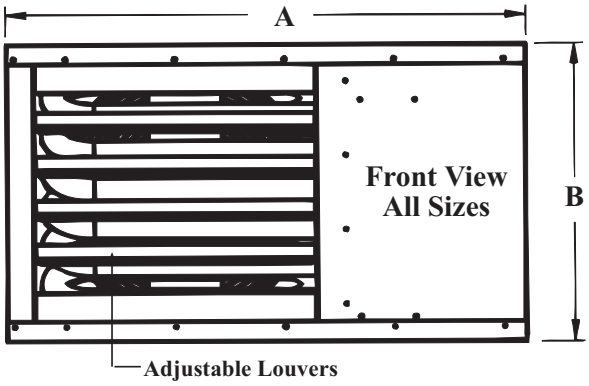

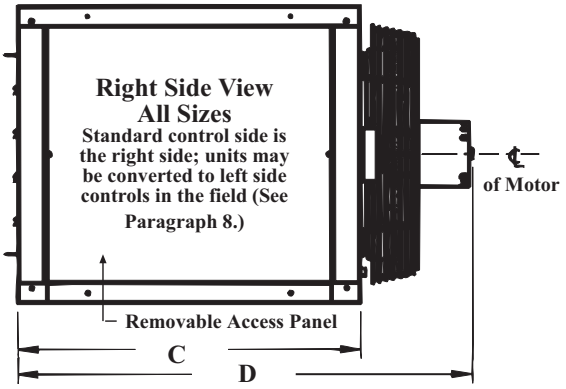

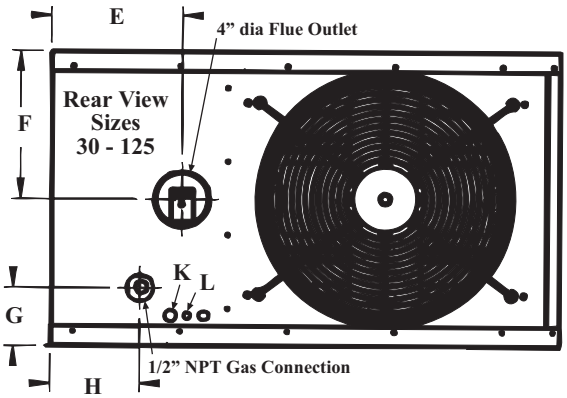

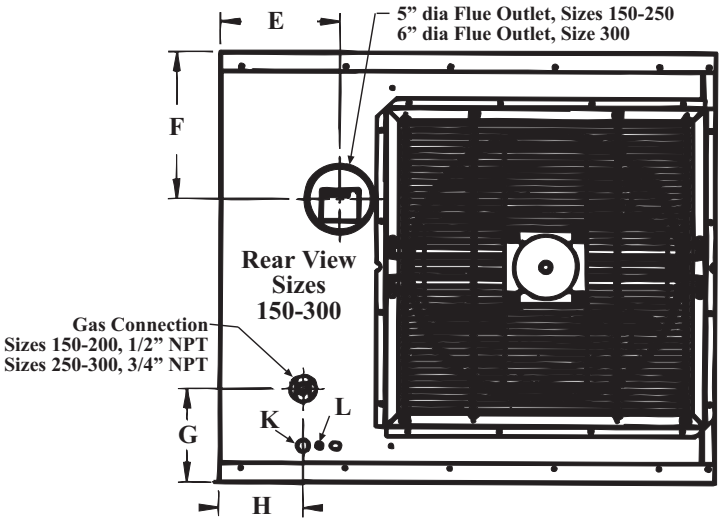

Field Wiring Connections	**K** = 115V/60Hz/1Ph **L** = Thermostat Wires (24V)

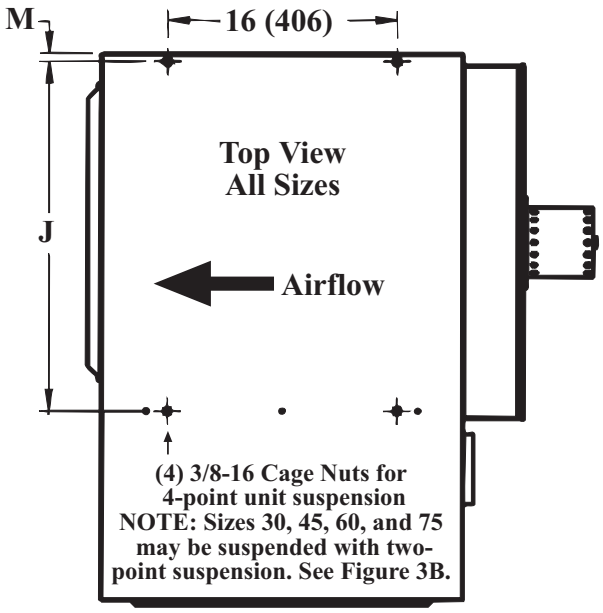

Dimensions (inches)

Size	30	45	60,75	100,125	150,200	250,300
A	28-5/8	28-5/8	28-5/8	38	38	50-1/8
B	12-1/8	12-1/8	18-1/8	22-1/16	33-1/16	33-1/16
C	21-1/4	21-1/4	23-1/4	25-5/16	25-5/16	25-5/16
D	25-9/16	26-3/16	31-3/8	33-9/16	34	35-3/8
E	6-9/16	6-9/16	6-9/16	9-3/4	6-3/16	8-3/16
F	5-13/16	5-13/16	8-3/4	11-1/8	11-3/8	11-3/8
G	4	4	4-1/4	4-3/8	7-1/8	7-1/8
H	3-1/16	3-1/16	3-1/16	6-11/16	6-1/2	4-15/16
J	17-15/16	17-15/16	17-15/16	24-1/4	24-1/4	29-3/8
M	9/16	9/16	9/16	9/16	9/16	8-1/2

Dimensions (mm)

Size	30	45	60,75	100,125	150,200	250,300
A	727	727	727	965	965	1273
B	308	308	460	560	840	840
C	540	540	591	643	643	643
D	649	665	797	852	864	899
E	167	167	167	248	233	208
F	148	148	222	283	289	289
G	102	102	108	111	181	181
H	78	78	78	170	165	125
J	456	456	456	616	616	746
M	14	14	14	14	14	216

11. Venting

DANGER: Check the Model No. on the rating plate. If there is a suffix -LN or -CV, DO NOT USE these venting instructions. Model FT heaters with either of these suffixes have special venting requirements; follow the instructions in Form RZ 433-CV/LN.

WARNING: Units installed in multiples require individual vent pipe runs and vent caps. Manifolding of vent runs is not permitted due to possible recirculation of combustion products into the building and possible back pressure effects on the combustion air proving switch.

Venting must be in accordance with the National Fuel Gas Code Z223.1 or CAN/CGA B149.1 and B149.2, Installation Code for Gas Burning Appliances and Equipment, and all local codes. Local requirements supersede national requirements.

These power-vented unit heaters are designed to operate safely and efficiently with either a horizontal or vertical vent. (Horizontal vent run is recommended for maximum fuel savings.) Comply with the specific requirements and instructions in the following paragraphs.

If this heater is replacing an existing heater, be sure that the vent is sized properly for the heater being installed. A properly sized vent system is required for safe operation of the heater. An improperly sized vent system can cause unsafe conditions and/or create condensation. Do not vent into an existing gravity vent or chimney.

Specific Venting Requirements (*read all before installing*)

1. Vent Pipe - The type of vent pipe required depends on the size of heater, the type of installation, and the vent configuration. Determine the vent pipe type from the table below.

Vent pipe diameters are listed in the Maximum Permissible Vent Length Table in No. 3. Select the vent pipe type and one of the flue pipe diameter(s) listed in the Table for the heater size being installed. If the vent being installed is a residential horizontal with Category I pipe, special vent pipe diameter and length requirements apply.

Type of Installation	Vent Configuration	Type of VENT Pipe Required
COMMERCIAL/ INDUSTRIAL (ANSI Z83.8 and CAN/C.G.A. 2.6) - **Applies to all Sizes**	**Horizontal Vent**	Use either vent pipe approved for a Category III appliance OR appropriately sealed 26-gauge galvanized steel or equivalent single-wall pipe. If local code requires, the terminal section may be double-wall pipe with a single-wall vent run.
	At least 1/2 of the equivalent vent length is Vertical	Vent pipe listed above for a horizontal power-vented system may be used, OR vent pipe approved for a Category I heater may be used. Single-wall pipe or double-wall (Type B) vent pipe are suitable for use with a Category I heater. If local code requires, the terminal section may be double-wall pipe with a single-wall vent run.
RESIDENTIAL (IAS Requirement 10-96) **- Applies only to Sizes 30, 45 and 60**	**Horizontal or Vertical Vent**	Use either vent pipe approved for a Category III appliance OR vent pipe approved for a Category I heater. Single-wall pipe or double-wall (Type B) vent pipe are suitable for use with a Category I heater. **(Special vent pipe size and vent length requirements apply to a residential horizontal vent with Category I pipe.)** If local code requires, the terminal section may be double-wall pipe with a single-wall vent run.

2. Venter (Flue) Outlet

Venter Outlet:

Model Size	30-125	150-250	300
Outlet Diameter	4"	5"	6"

Venter Outlet Attachment Requirements:

- A 4" to 3" vent reducer is required whenever 3" diameter vent pipe is used on Sizes 30, 45, 60, or 75. See the Vent Length Table in Paragraph No. 3.
- A 4" to 5" vent increaser collar is required whenever 5" diameter vent pipe is used on Sizes 45 and 60. See the special venting requirements for a horizontal residential Category I vent in Paragraph No. 3.
- A minimum of 12" of straight pipe is required at the venter outlet before installing an elbow in the vent system. An elbow should never be attached directly to the venter. An elbow attached to the straight pipe can be in any position at or above horizontal. See Figure 5.

Figure 5 - Alternate Vent Directions

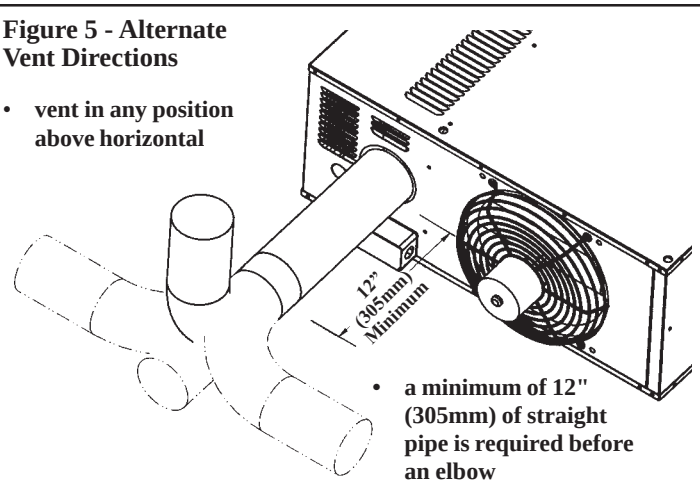

3. Vent Pipe Diameter and Vent Length

Comply with all requirements that apply. Use only one diameter of vent pipe on an installation. Minimum vent length is 5 feet.

Maximum Permissible Vent Lengths				
FT	Vent Pipe Diameter (see NOTES and special requirements in the right column)	Maximum Vent Length	Equivalent Straight Length* 90° Elbows	Equivalent Straight Length* 45° Elbows
30	3" or 4"	30 ft	5 ft	2.5 ft
		9 M	1.5M	.75M
45	3" or 4"	30 ft	5 ft	2.5 ft
		9 M	1.5M	.75M
60	3"	30 ft	5 ft	2.5 ft
		9 M	1.5M	.75M
	4"	40 ft	5 ft	2.5 ft
		12 M	1.5M	.75M
75	3"	30 ft	5 ft	2.5 ft
		9 M	1.5M	.75M
	4"	40 ft	5 ft	2.5 ft
		12 M	1.5M	.75M
100	4"	50 ft	5 ft	2.5 ft
		15 M	1.5M	.75M
125	4"	50 ft	5 ft	2.5 ft
		15 M	1.5M	.75M
150	5"	50 ft	5 ft	2.5 ft
		15 M	1.5M	.75M
200	5"	50 ft	5 ft	2.5 ft
		15 M	1.5M	.75M
250	5"	50 ft	5 ft	2.5 ft
		15 M	1.5M	.75M
300	6"	50 ft	5 ft	2.5 ft
		15 M	1.5M	.75M

*Reduce the maximum vent length by the amount indicated for each elbow used.

IMPORTANT Vent Length NOTES:

1) If the system contains all vertical pipe or a combination of horizontal and vertical vent pipe, the Maximum Permissible Vent Length in the Table may be increased one foot for each foot of vertical rise up to a maximum increase of ten feet.

2) If using vent pipe approved for a Category I appliance to install a horizontal vent on a *residential* application, the maximum horizontal length is five feet (1.5M). Do not include the elbow used to connect the horizontal section to the vertical section in the 5-foot limit. The vertical portion must be a minimum of 8". **See Special Requirements below and Figure 6.**

Special Vent Pipe Requirements for Residential Horizontal Vent System Using Category I Pipe (See Figure 6)

When installing pipe approved for a Category I heater in a residential horizontal vent system, it is necessary to use 4" pipe only on a Size 30 and 5" pipe only on Sizes 45 and 60. Sizes 45 and 60 will require an increaser collar at the venter outlet. The maximum horizontal vent length for a residential Category I vent is 5 ft (1.5M); see Figure 6.

Model FT Size	Vent Pipe Diameter	Venter Outlet Diameter	Field-supplied "increaser" collar required to connect pipe to venter outlet
30	4"	4"	No
45	5"	4"	Yes
60	5"	4"	Yes

Figure 6 - Horizontal Vent on a *Residential* Installation using Category I Vent Pipe

- **Size 30 requires 4" diameter vent pipe**
- **Size 45 requires 5" diameter vent pipe**
- **Size 60 requires 5" diameter vent pipe**
- **Maximum horizontal vent length is 5' (1.5M)**
- **Minimum vertical vent length is 8" (203mm)**
- **Comply with clearances**
- **Drill the elbow as illustrated (single-wall pipe only)**

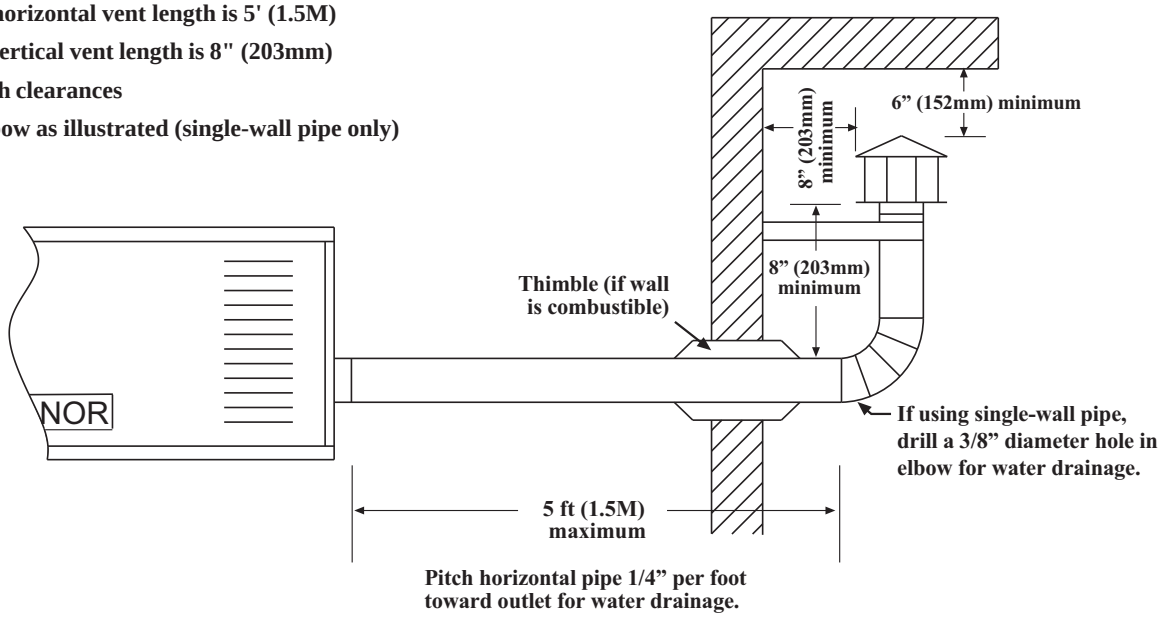

11. Venting Requirements (cont'd)

4. Vent System Joints - Vent system joints depend on the type of pipe being used (See "Vent Pipe" requirements, No.1).

- If using single wall, 26-gauge or heavier galvanized pipe, secure slip-fit connections using sheetmetal screws or rivets. Seal pipe joints either with tape suitable for 550°F (such as Option FA1, P/N 98266) or high-temperature silicone sealant.

  If using single-wall pipe to install a horizontal vent on a residential application (Figure 6), make the elbow rigid by adding a light bead of silicone sealant to the full circumference of ***all*** elbow section joints.
- If using Category III vent pipe, follow the pipe manufacturer's instructions for joining pipe sections. When attaching Category III pipe to the venter outlet or the vent cap, make secure, sealed joints following a procedure that best suits the style of Category III pipe being used.
- If using double-wall (Type B) vent pipe, follow the pipe manufacturer's instructions for joining pipe sections.

  For joining double-wall pipe to the venter outlet collar, increaser collar, single-wall pipe, and/or the vent cap, follow the "boxed" instructions below:

Instructions for attaching double-wall (Type B) vent pipe to the venter outlet, a single-wall pipe run, or to the vent cap (use these instructions for either full length double-wall or terminal only):
Hardware and Sealant Required: 3/4" long sheetmetal screws; and a tube of silicone sealant

1) Look for the "flow" arrow on the vent pipe; attach according to the arrow. Slide the pipe so that the venter outlet, the single-wall pipe, or the vent cap is inside the double-wall pipe.

2) Drill a hole through the pipe into the outlet collar, the single-wall pipe, or the vent cap. (Hole should be slightly smaller than the sheetmetal screw being used.) Using a 3/4" long sheetmetal screw, attach the pipe. Do not overtighten. Repeat, drilling and inserting two additional screws evenly spaced (120° apart) around the pipe.

3) Use sealant to seal any gaps. If there is an annular opening, run a large bead of sealant in the opening. The bead of sealant must be large enough to seal the opening, but it is not necessary to fill the full volume of the annular area.

5. Vent System Support - Lateral runs should be supported every six feet using a non-combustible material, such as strap steel or chain. Do not rely on the heater for support of either horizontal or vertical vent pipe.

6. Condensation - On Model Sizes 30 and 45 only, if a single-wall vent pipe run exceeds 15 feet (4.6 M) of straight length, it is recommended that the pipe be insulated along its entire length with a minimum of 1/2" foil-faced fiberglass, 1-1/2# density insulation rated for 250°F.

On all Model Sizes, any length of single-wall vent pipe exposed to cold air or run through an unheated area or an area with an ambient temperature of 45°F or less must be insulated along its entire length with a minimum of 1/2" foil-faced fiberglass, 1-1/2# density insulation. Model Sizes 30 and 45 require insulation rated for 250°F; Model Sizes 60-300 require insulation rated for 400°F.

Where extreme conditions are anticipated, install a means of condensate disposal.

7. Vent Terminal (Pipe and Vent Cap) - The vent system must be terminated with the type of vent cap approved for use with this heater. The vent cap must be the same size as the vent pipe (vent pipe is either 3", 4", 5" or 6" diameter). Heaters must be equipped with the heater manufacturer's vent cap, a Type L Breidert *Air-x-hauster*® vent cap, or equivalent. A different style vent cap could cause nuisance problems or unsafe conditions.

See the illustrations in Figures 7A and 7B for requirements of vertical and horizontal vent termination. The vent terminal pipe may be either single-wall or double-wall (Type B). If double-wall pipe is used in the vent terminal with a single-wall vent run, follow the instructions in "Vent System Joints" (in the left column) to attach the vent cap and to connect the double-wall pipe to the single-wall vent pipe run.

Figure 7A - Vertical Vent Terminals

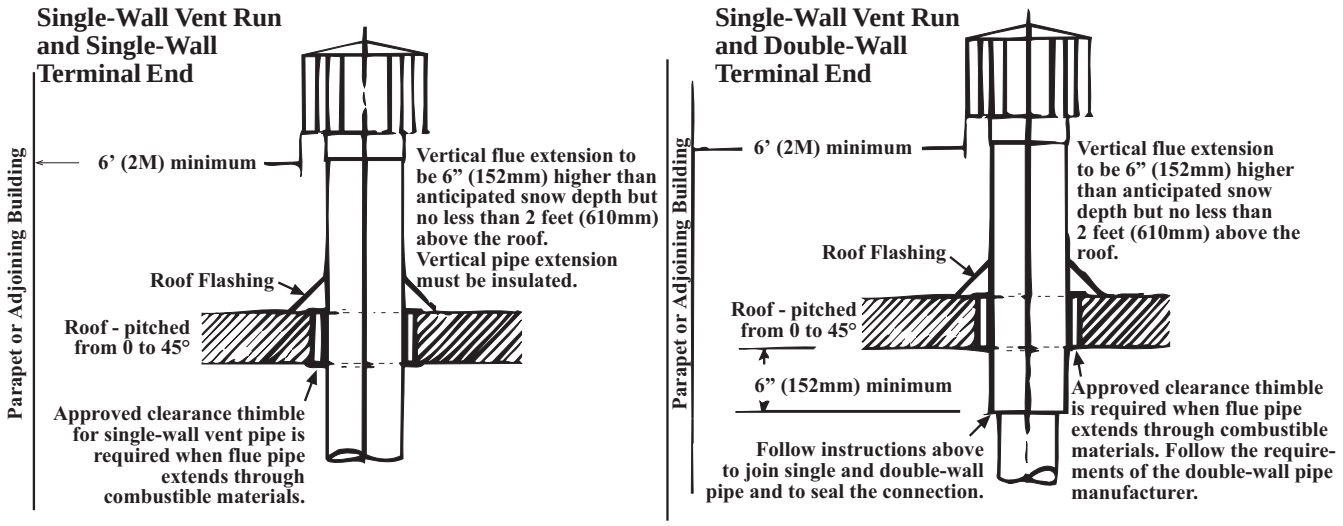

Figure 7B - Horizontal Vent Terminals

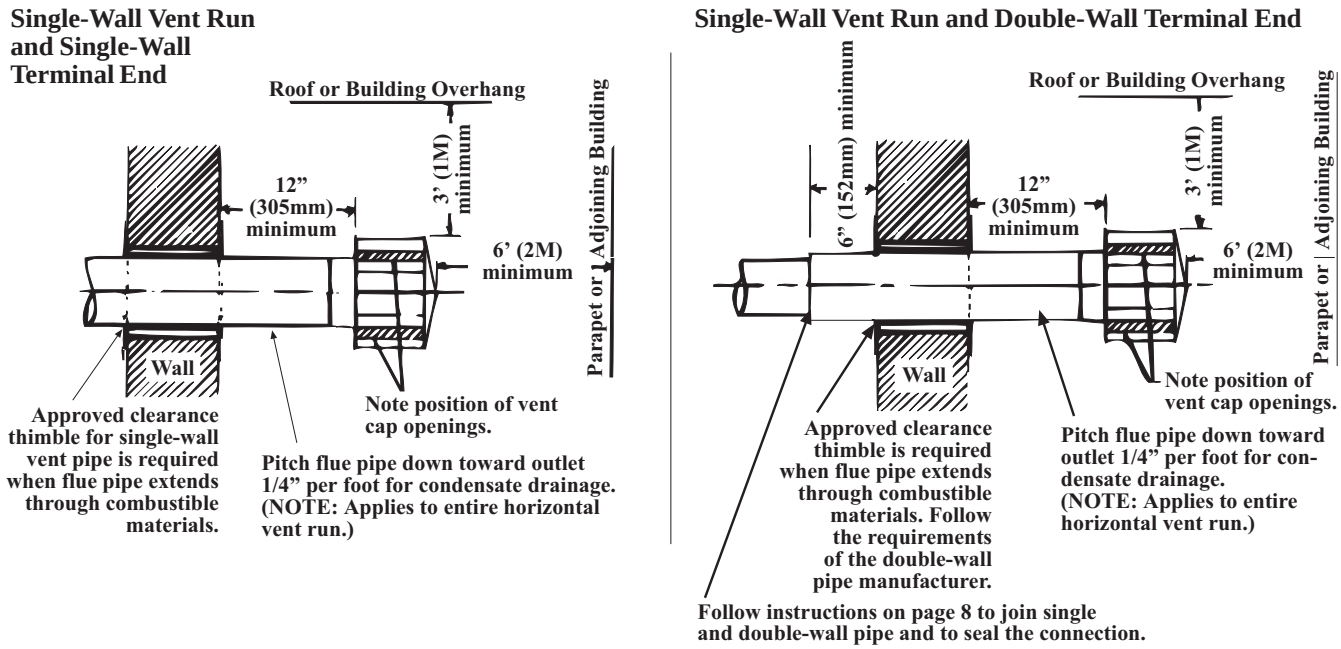

Horizontal Vent Terminal Clearances

A vent cap is required. Maintain a clearance of 12" (305mm) from the wall to the vent terminal cap for stability under wind conditions.

Products of combustion can cause discoloration of some building finishes and deterioration of masonry materials. Applying a clear silicone sealant that is normally used to protect concrete driveways can protect masonry materials. If discoloration is an esthetic problem, relocate the vent or install a vertical vent.

Structure	Minimum Clearances for Vent Termination Location (all directions unless specified)
Forced air inlet within 10 ft (3.1m)	3 ft (0.9m) above
Combustion air inlet of another appliance	6 ft (1.8m)
Door, window, or gravity air inlet (any building opening)	4 ft (1.2m) horizontally 4 ft (1.2m) below 1 ft (30cm) above
Electric meter, gas meter * and relief equipment	4 ft (1.2m) horizontally
Gas regulator *	3 ft (0.9m)
Adjoining building or parapet	6 ft (1.8m)
Adjacent public walkways	7 ft (2.1m) above
Grade (ground level)	7 ft (2.1m) above
*Do not terminate the vent directly above a gas meter or service regulator.	

12. Gas Piping and Pressures

WARNING: This appliance is equipped for a maximum gas supply pressure of 1/2 pound, 8 ounces, or 14 inches water column. Supply pressure higher than 1/2 pound requires installation of an additional lockup-type service regulator external to the unit.

PRESSURE TESTING SUPPLY PIPING

Test Pressures Above 1/2 PSI: Disconnect the heater and manual valve from the gas supply line which is to be tested. Cap or plug the supply line.

Test Pressures Below 1/2 PSI: Before testing, close the manual valve on the heater.

All piping must be in accordance with requirements outlined in the National Fuel Gas Code ANSI/Z223.1a (latest edition) or CAN/CGA-B149.1 and B149.2 (See Paragraph 1). Gas supply piping installation should conform with good practice and with local codes. Support gas piping with pipe hangers, metal strapping, or other suitable material; do no rely on the heater to support the gas pipe.

Unit heaters are orificed for operation with natural gas having a heating value of 1000 (± 50) BTUH per cubic ft or propane gas with a heating value of 2550 BTUH per cubic ft. If the gas at the installation does not meet these specifications, consult the factory for proper orificing.

Pipe joint compounds (pipe dope) shall be resistant to the action of liquefied petroleum gas or any other chemical constituents of the gas being supplied.

Install a ground joint union and manual shut-off valve upstream of the unit control system, as shown in Figure 8. The 1/8" plugged tapping in the shutoff valve provides connection for a supply line pressure test gauge. The National Fuel Gas Code requires the installation of a trap with a minimum 3" drip leg. Local codes may require a minimum drip leg longer than 3" (typically 6").

Gas connection is 1/2" for Sizes 30-200 and 3/4" for Sizes 250-300. Leak-test all connections by brushing on a leak-detecting solution.

WARNING: All components of a gas supply system must be leak tested prior to placing equipment in service. NEVER TEST FOR LEAKS WITH AN OPEN FLAME. Failure to comply could result in personal injury, property damage or death.

12. Gas Pressures (cont'd)

Sizing a Gas Supply Line

Capacity of Piping
Cubic Feet per Hour based on 0.3" w.c. Pressure Drop
Specific Gravity for Natural Gas -- 0.6 (Natural Gas -- 1000 BTU/Cubic Ft)
Specific Gravity for Propane Gas -- 1.6 (Propane Gas -- 2550 BTU/Cubic Ft)

Length of Pipe	Diameter of Pipe											
	1/2"		3/4"		1"		1-1/4"		1-1/2"		2"	
	Natural	Propane	Natural	Propane	Natural	Propane	Natural	Propane	Natural	Propane	Natural	Propane
20'	92	56	190	116	350	214	730	445	1100	671	2100	1281
30'	73	45	152	93	285	174	590	360	890	543	1650	1007
40'	63	38	130	79	245	149	500	305	760	464	1450	885
50'	56	34	115	70	215	131	440	268	670	409	1270	775
60'	50	31	105	64	195	119	400	244	610	372	1105	674
70'	46	28	96	59	180	110	370	226	560	342	1050	641
80'	43	26	90	55	170	104	350	214	530	323	990	604
90'	40	24	84	51	160	98	320	195	490	299	930	567
100'	38	23	79	48	150	92	305	186	460	281	870	531
125'	34	21	72	44	130	79	275	168	410	250	780	476
150'	31	19	64	39	120	73	250	153	380	232	710	433
175'	28	17	59	36	110	67	225	137	350	214	650	397
200'	26	16	55	34	100	61	210	128	320	195	610	372

Note: When sizing supply lines, consider possibilities of future expansion and increased requirements.
Refer to National Fuel Gas Code for additional information on line sizing.

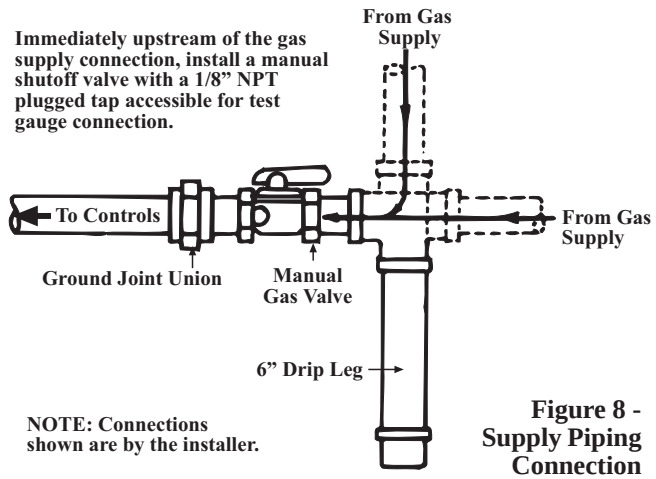

Figure 8 - Supply Piping Connection

Manifold or Orifice Pressure Settings

Measuring manifold gas pressure cannot be done until the heater is in operation. It is included in the steps of the "Check-Test-Start" procedure in Paragraph 21. The following warnings and instructions apply.

WARNING: Manifold gas pressure must never exceed 3.5" w.c. for natural gas and 10" w.c. for propane gas.

For Natural Gas: When the heater leaves the factory, the combination gas valve is set so that the manifold gas pressure is regulated to 3.5" w.c. Inlet supply pressure to the valve for natural gas must be a minimum of 5" w.c. or as noted on the rating plate and a maximum of 14" w.c.

For Propane Gas: When the heater leaves the factory, the combination gas valve is set so that the manifold gas pressure is regulated to 10" w.c. Inlet supply pressure to the valve for propane gas must be a minimum of 11" w.c. and a maximum of 14" w.c.

Before attempting to measure or adjust manifold gas pressure, the inlet supply pressure *must* be within the specified range both when the heater is in operation and on standby. Incorrect inlet pressure could cause excessive manifold gas pressure immediately or at some future time. If natural gas supply pressure is too high, install a regulator in the supply line before it reaches the heater. If natural gas supply pressure is too low, contact your gas supplier.

Instructions on How to Check Manifold Pressure (can only be done after heater is installed):

1) With the manual valve positioned to prevent flow to the main burners, connect a manometer to the 1/8" pipe outlet pressure tap in the valve. NOTE: A manometer (fluid-filled gauge) is recommended rather than a spring type gauge due to the difficulty of maintaining calibration of a spring type gauge.

2) Open the valve and operate the heater. Measure the gas pressure to the manifold. Normally adjustments should not be necessary to the factory preset regulator.

If adjustment is necessary, set pressure to correct settings by turning the regulator screw IN (clockwise) to increase pressure. Turn regulator screw OUT (counterclockwise) to decrease pressure.

Derating by Manifold Pressure Adjustment for High Altitude Operation

If the heater is being installed above 2000 ft (610M) and it was determined in Paragraph 4 that derating by manifold pressure adjustment is permissible, follow the instructions below.

Instructions for Derating a Heater by Adjusting Manifold Pressure (The heater *must* have a single-stage gas valve *and must* be factory-equipped for sea level operation.)

1. Check the rating plate to be certain that the heater is equipped for sea level operation. ***Do not attempt to derate by manifold gas pressure adjustment if the heater is factory equipped for high altitude. Do not attempt to adjust manifold pressure on heaters equipped with two stage gas valves.***
2. Determine the required manifold pressure for the elevation where the heater will be operating. If unsure of the elevation, contact the local gas supplier.

Manifold Pressure Settings by Elevation

Altitude Feet	Altitude Meters	Natural Gas (inches W.C.)	Propane Gas (inches W.C.)
0- 2000	1-610	3.5	10.0
2001-3000	611-915	2.8	7.7
3001-4000	916-1220	2.5	7.1
4001-5000	1221-1525	2.3	6.4
5001-6000	1526-1830	2.1	5.8
6001-7000	1831-2135	1.9	5.2
7001-8000	2136-2440	1.7	4.6
8001-9000	2441-2745	1.5	4.1

3. With the manual valve positioned to prevent flow to the main burners, connect a manometer to the 1/8" pipe outlet pressure tap in the valve. Use a water column manometer that is readable to the nearest tenth of an inch.
4. Remove the cap from the pressure adjusting screw and adjust the manifold pressure to the pressure setting selected from the table. Cycle the main burners once or twice to properly seat the adjustment spring in the valve.

   Re-check the pressure. If necessary, re-adjust the pressure. When the pressure is correct, remove the manometer and replace the cap. Check for leaks at the pressure tap fitting.
5. With the heater operating determine that the inlet pressure to the heater for natural gas is between 5 and 13.5 in. w.c. and for propane between 10 and 13.5 in. w.c. Take this reading as close as possible to heater (Most heaters are now equipped with gas valves that have an inlet pressure tap.) ***If the inlet pressure is not within the specified range, the inlet pressure must be corrected and Steps 3 and 4 repeated.***
6. If altitude is above 6000 ft (1830M), verify that the pressure switch has been changed.

High Altitude Combustion Air Pressure Switches

FT	P/N	Description
30	164674	Blue Label, -.10", #PPS10027-2733
45-60	164675	Brown Label, -.17", #PPS10027-2734
75-200	149879	Orange Label, -.50", #PPS10027-2355
250-300	151372	White Label, -.74", #PPS10027-2406

7. Find the Manifold Pressure Adjustment label in the plastic bag that contained these instructions. Using a permanent marker, fill-in the pressure setting. Adhere the label on the heater near the gas valve so that it is conspicuous to someone servicing the valve.

13. Electrical Supply and Connections

All electrical wiring and connections, including electrical grounding MUST be made in accordance with the National Electric Code ANSI/NFPA No. 70 (latest edition) or, in Canada, the Canadian Electrical Code, Part I-C.S.A. Standard C22.1. In addition, the installer should be aware of any local ordinances or gas company requirements that might apply.

Check the rating plate on the heater for the supply voltage and current requirements. A dedicated line voltage supply with fused disconnect switch should be run directly from the main electrical panel to the heater. All external wiring must be within approved conduit and have a minimum temperature rise of 60°C. Conduit from the disconnect switch must be run so as not to interfere with the service panels of the heater.

The electrical supply and control wiring enter at the rear of the heater and connect to the integrated circuit board. The 115 volt supply wiring connects to pigtails on the lower portion of the circuit board. The terminal strip for 24 volt thermostat connections is located on the upper portion of the circuit board. See Figure 9.

CAUTION: Route the wires so that they do not contact the flue wrapper or venter housing.

Consult the wiring diagram supplied with your heater. A typical wiring diagram is on page 12.

CAUTION: If any of the original wire as supplied with the appliance must be replaced, it must be replaced with wiring material having a temperature rating of at least 105°C, except for limit control and sensor lead wires which must be 150°C. See Hazard Levels, page 1.

14. Thermostat and Connections

A thermostat is not standard equipment but is an installation requirement. Use either an optional thermostat available with the heater or a field-supplied 24-volt thermostat. Install according to the thermostat manufacturer's instructions, paying particular attention to the requirements regarding the location of the thermostat.

Make sure that the heat anticipator setting on the thermostat is 0.6 amps (or in accordance with the amperage value noted on the wiring diagram of your heater).

15. Fan Motor

The fan motor is equipped with thermal overload protection of the automatic reset type. Should the motor refuse to run, it may be because of improper current characteristics. Make certain that the correct voltage is available at the motor.

Figure 9 - Electrical Connections, DIP Switch Settings, and LED Signal Codes on the Integrated Circuit Board in the Control Compartment

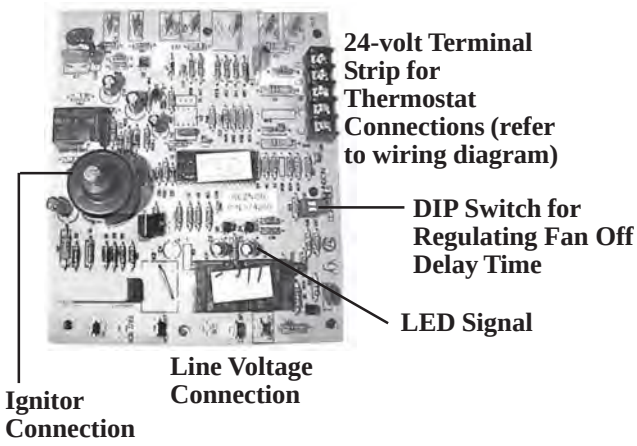

DIP Switch Settings

SW1 1	SW1 2	Fan Delay to Off
OFF	OFF	90 seconds
OFF*	ON*	120 seconds*
ON	OFF	180 seconds
ON	ON	240 seconds

*Standard factory setting.

Circuit Board LED Flash Codes

Slow Flash ..... Normal Operation, No Call for Heat
Fast Flash ..... Normal Operation, Call for Heat
2 Flashes ..... System Lockout, Failed to Detect or Sustain Flame
3 Flashes ..... Pressure Switch Open or Closed
4 Flashes ..... High Limit or Flame Rollout Switch Open
5 Flashes ..... Flame Sensed and Gas Valve Not Energized
Steady On ..... Internal Failure - Replace the Circuit Board

TYPICAL WIRING DIAGRAM

Fan-Type, Power-Vented Model with Direct Spark Ignition, Single-Stage Heating, Natural or Propane Gas

Figure 10 - Wiring Diagram #147203 for Model FT, Sizes 30 - 300

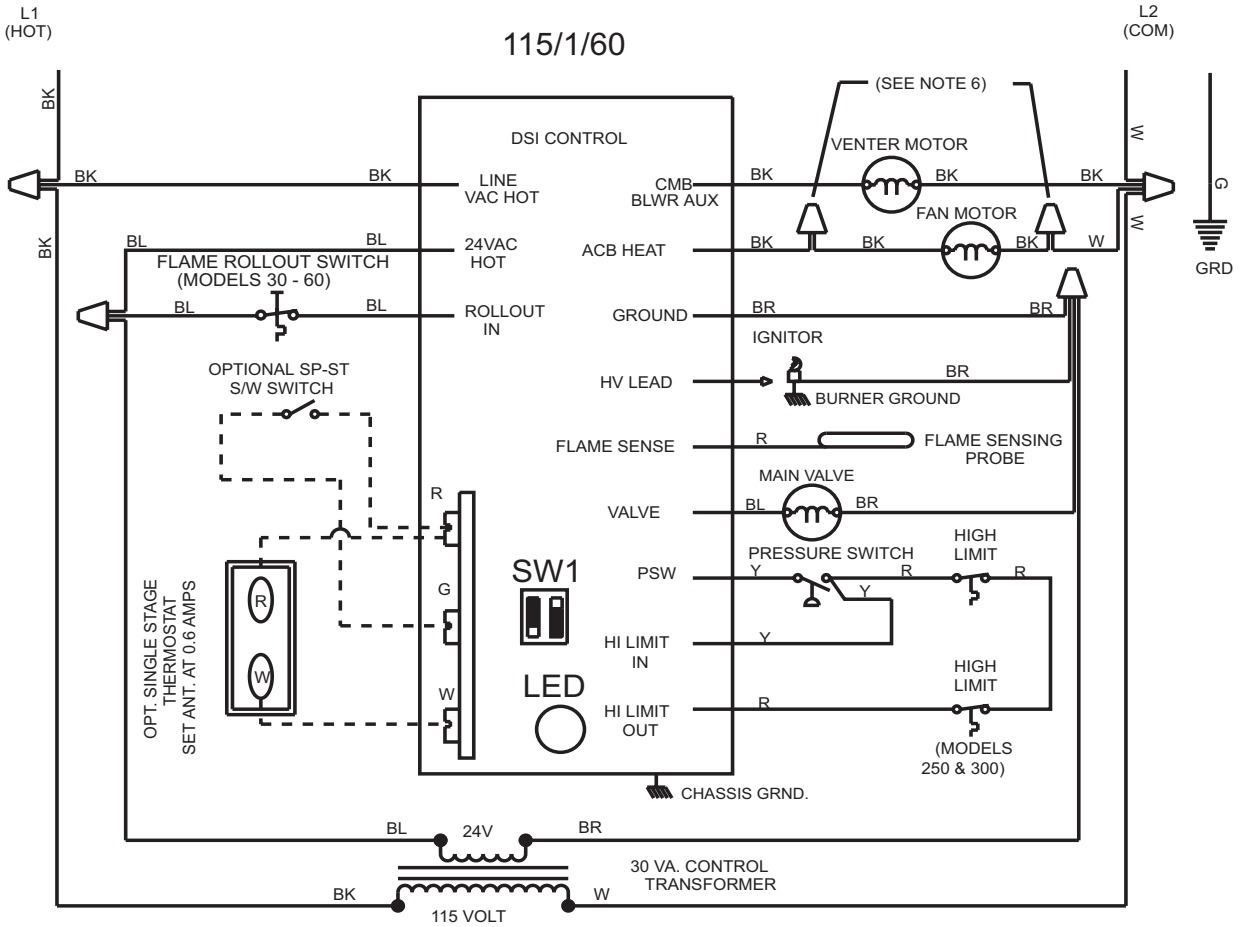

OPERATING SEQUENCE

1. SET THERMOSTAT AT LOWEST SETTING.
2. TURN ON MANUAL GAS VALVE.
3. TURN ON POWER TO UNIT.
4. SET THERMOSTAT AT DESIRED SETTING.
5. THERMOSTAT CALLS FOR HEAT, ENERGIZING THE VENTER MOTOR.
6. VENTER PRESSURE SWITCH CLOSES, FIRING UNIT.
7. BURNER FLAME IS SENSED, AND IN 30 SECONDS THE FAN MOTOR IS ENERGIZED.
8. IF THE FLAME IS EXTINGUISHED DURING MAIN BURNER OPERATION, THE INTEGRATED CONTROL SYSTEM CLOSES THE MAIN VALVE AND MUST BE RESET BY INTERRUPTING POWER TO THE CONTROL CIRCUIT (SEE LIGHTING INSTRUCTIONS).

WIRING CODE
BLACK - BK
BROWN - BR
RED - R
ORANGE - O
YELLOW - Y
GREEN - G
BLUE - BL
PURPLE - PR
WHITE - W

NOTES

1. THE FOLLOWING CONTROLS ARE FIELD INSTALLED OPTIONS: THERMOSTAT
2. DOTTED WIRING INSTALLED BY OTHERS.
3. CAUTION: IF ANY OF THE ORIGINAL WIRING AS SUPPLIED WITH THE APPLIANCE MUST BE REPLACED, IT MUST BE REPLACED WITH WIRING MATERIAL HAVING A TEMPERATURE RATING OF AT LEAST 105°C. EXCEPT FOR SENSOR LEAD WIRE AND LIMIT WIRING WHICH MUST BE 150°C.
4. USE 18 GA. WIRE FOR ALL WIRING ON THE UNIT.
5. LINE AND FAN MOTOR BRANCH WIRE SIZES SHOULD BE OF A SIZE TO PREVENT VOLTAGE DROPS BEYOND 5% OF SUPPLY LINE VOLTAGE.
6. THESE WIRE NUTS ARE NOT USED ON ALL MODELS.

DIP SWITCH SETTINGS

SW1 1	SW1 2	FAN DELAY TO OFF
OFF	OFF	90 SECONDS
OFF	ON	120 SECONDS (FACTORY SETTING)
ON	OFF	180 SECONDS
ON	ON	240 SECONDS

FACTORY WIRING

FIELD WIRING

OPTIONAL FACTORY WIRING

WIRE NUT

LED CODES

SLOW FLASH NORMAL OPERATION - NO CALL FOR HEAT
FAST FLASH NORMAL OPERATION - CALL FOR HEAT
2 FLASHES SYSTEM LOCKOUT - FAILED TO DETECT OR SUSTAIN FLAME
3 FLASHES PRESSURE SWITCH OPEN OR CLOSED
4 FLASHES OPEN CIRCUIT TO HIGH LIMIT OR FLAME ROLLOUT TERMINAL
5 FLASHES FLAME SENSED AND GAS VALVE NOT ENERGIZED
STEADY ON INTERNAL FAILURE (MICRO-CONTROLLER FAILURE: SELF CHECK)

FIELD CONTROL WIRING

TOTAL WIRE LENGTH	DISTANCE FROM UNIT TO CONTROL	MIN. RECOMMENDED WIRE GAUGE
150'	75'	#18 GA. WIRE
250'	125'	#16 GA. WIRE
350'	175'	#14 GA. WIRE

REZNOR
FT SERIES

W.D. 147203 REV. #6

16. Combustion Air Proving Switch

The combustion air proving switch is a pressure sensitive switch that monitors air pressure to ensure that proper combustion air flow is available. The switch is a single pole - normally open - device which closes when a decreasing pressure is sensed in the venter housing.

On start-up when the heater is cold, the sensing pressure is at the most negative level, and as the heater and flue system warm up, the sensing pressure becomes less negative. After the system has reached equilibrium (about 20 minutes), the sensing pressure levels off.

If a restriction or excessive flue length or turns cause the sensing pressure to be outside the switch setpoint, the pressure switch will function to shut off the main burners. The main burners will remain off until the system has cooled and/or the flue system resistance is reduced. The Table below lists the approximate water column negative pressure readings and switch setpoints for sea level operating conditions.

Model Sizes		Start-Up Cold	Equilibrium	Set Point "OFF"	Set Point "ON"
30	Units mfgd prior to 11/97	-1.2	-0.70	-0.55	-0.65
45	(verify on rating plate; 11/97	-1.2	-0.70	-0.55	-0.65
60	is Serial No. Date Code AWK)	-1.2	-0.75	-0.55	-0.65
30	Units mfgd beginning 11/97	-0.9	-0.60	-0.42	-0.52
45	(verify on rating plate; 11/97	-1.1	-0.67	-0.55	-0.65
60	is Serial No. Date Code AWK)	-1.1	-0.66	-0.50	-0.60
30	Units mfgd beginning 8/98	-1.4	-0.60	-0.15	-0.25
45	(verify on rating plate; 8/98	-1.1	-0.60	-0.22	-0.32
60	is Serial No. Date Code AXH)	-1.1	-0.63	-0.22	-0.32
75, 100, 125, 150, 200		-1.3	-0.78	-0.55	-0.65
250, 300		-1.4	-1.25	-0.80	-0.90

DANGER: Safe operation of this unit requires proper venting flow. NEVER bypass combustion air proving switch or attempt to operate the unit without the venter running and the proper flow in the vent system. Hazardous conditions could result. See Hazard Levels, page 1.

17. Gas Valve

The main operating gas valve is powered by the 24-volt control circuit through the thermostat and safety controls. The main control valve is of the diaphragm type providing regulated gas flow preset at the factory.

WARNING: The operating valve is the prime safety shutoff. All gas supply lines must be free of dirt or scale before connecting the unit to ensure positive closure. See Hazard Levels, page 1.

18. Ignition System

This heater is equipped with a direct spark integrated control system. The system monitors the safety devices and controls the operation of the fan and venter motors and the gas valve between heat cycles.

Ignition System Operating Sequence -- On a call for heat from the thermostat, the system energizes the venter motor and goes through a 10-second prepurge. The system verifies that both the pressure switch and the high limit are in the closed state. The gas valve is then energized and the ignition system provides the high voltage spark to the electrode to ignite the main burner gas. Burner flame is electronically sensed by the control upon carryover of all burners. (A separate solid metal probe is used as the flame sensing function. A low voltage electrical signal is imposed on the metal probe which is electrically isolated from ground. When the flame impinges on the flame sensing probe, the flame acts as a conduction path to ground. The flame rectifies and completes the DC circuit, and the ignition system acknowledges the flame.) The fan motor is energized by the system after 30 seconds of flame sensing.

After the thermostat has been satisfied, the system de-energizes the gas valve, the venter motor goes through a 45-second post-purge, and the fan motor remains energized for an additional 180 seconds.

NOTE: This is a three trial system, should the unit not sense burner flame, the unit will lockout for one hour before initiating another trial for ignition. To initiate another trial for ignition before the one hour, requires that either the thermostat be reset or the power to the unit be interrupted for 30 seconds.

19. Burners

This unit heater has inshot burners designed to provide controlled flame stability without lifting or flashback with either natural or propane gas. The burners are lightweight and factory mounted in an assembly which permits them to be removed as a unit for inspection or service.

20. Burner Air Restrictor

Sizes 250 and 300 burning propane gas are equipped with a two-piece burner air restrictor. The air restrictor is attached to the burner assembly and is not field adjustable.

21. Check Installation & Start-up

Check the installation prior to start-up:

- ☐ Check suspension. Unit must be secure and level.
- ☐ Check clearances from combustibles. Requirements are shown in Paragraph 6.
- ☐ Check vent system to be sure that it is installed according to the instructions in Paragraph 11.
- ☐ Check piping for leaks and proper gas line pressure. Bleed gas lines of trapped air. See Paragraph 12.
- ☐ Check electrical wiring. Be sure all wire gauges are as recommended. A service disconnect switch should be used. Verify that fusing or circuit breakers are adequate for the load use.

Heater Start-Up:

WARNINGS: For your safety, read before operating. If you do not follow these instructions exactly, a fire or explosion may result causing property damage, personal injury, or loss of life.

- **This appliance does not have a pilot. It is equipped with an ignition device which automatically lights the burner. Do not try to light the burner by hand.**
- **Before operating, smell all around the appliance area for gas. Be sure to smell next to the floor because some gas is heavier than air and will settle on the floor.**

WHAT TO DO IF YOU SMELL GAS

- **Do not try to light any appliance.**
- **Do not touch any electrical switch; do not use any phone in your building.**
- **Immediately call your gas supplier from a neighbor's phone. Follow the gas supplier's instructions.**
- **If you cannot reach your gas supplier, call your fire department.**

- **Use only your hand to turn the gas control ON/OFF knob or lever on the gas valve. Never use tools. If the valve ON/OFF knob or lever will not turn by hand, do not try to repair it. Call a qualified service technician. Force or attempted repair may result in a fire or explosion.**
- **Should overheating occur, or the gas supply fail to shut off, turn off the manual gas valve to the appliance before shutting off the electrical supply.**
- **Do not use this appliance if any part has been under water. Immediately call a qualified service technician to inspect the appliance and to replace any part of the control system and any gas control which has been under water.**

Operating Instructions and Operating Sequence

1. Set thermostat at lowest setting.
2. Turn off all electric power to the appliance.
3. This appliance is equipped with an ignition device which automatically lights the burner. Do not try to light the burner by hand. Open the access door and locate the gas control (ON/OFF) knob or lever on the gas valve. (See Figure 11.)
4. Turn the gas control knob or lever clockwise to "OFF".
5. Wait five (5) minutes to clear out any gas. Then smell for gas, including near the floor. **If you smell gas, STOP!** and follow the steps in the **WARNINGS** printed on the left or on the Operating Label on the heater. If you do not smell gas, proceed to the next step.

Figure 11 - Gas Valve (Depending on the size and date of manufacture, the heater could have either of these types of valves.)

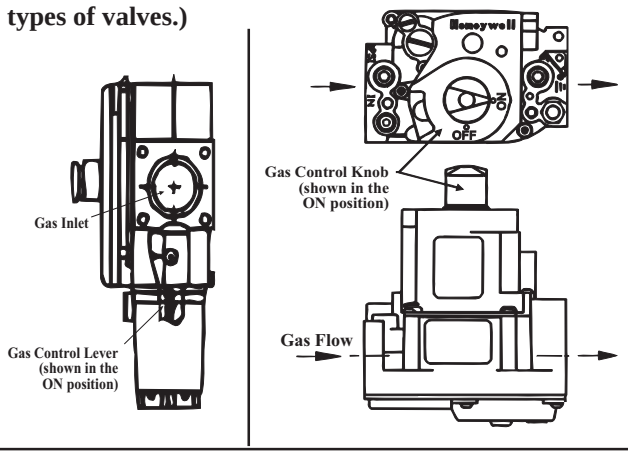

6. Turn the gas control knob or lever counterclockwise to "ON".
7. Close the access door.
8. Turn on the electric power to the heater.
9. Set the thermostat to the desired setting.

NOTE: If the appliance does not operate, follow the instructions "To Turn Off Gas to Appliance" printed below (and on the Operating Label on the heater) and call your service technician.

10. Thermostat calls for heat, energizing the venter motor.
11. Venter pressure switch closes, firing the unit.
12. Burner flame is sensed and in 30 seconds, the fan motor is energized.
13. If the flame is extinguished during the main burner operation, the integrated control system closes the main valve and must be reset by interrupting power to the control circuit. (See lighting instructions on the heater.).

TO TURN OFF GAS TO THE APPLIANCE

1) Set thermostat to lowest setting
2) If service is to be performed, turn off all electric power to the appliance.
3) Open the access door.
4) Turn the gas control knob or lever clockwise to "OFF". Do not force.
5) Close the access door.

Check installation after start-up:

☐ Vent System Testing Procedure

1. Seal any unused openings in the venting system.
2. Inspect the venting system for proper size and horizontal pitch, as required in the National Fuel Gas Code, ANSI Z223.1 or CAN/CGA B149.1and B149.2, Installation Code for Gas Burning Appliances and Equipment, and this manual. Determine that there is no blockage or restriction, leakage, corrosion and other deficiencies which could cause an unsafe condition.
3. In so far as practical, close all building doors and windows and all doors between the space where the heater is and other spaces of the building. Turn on clothes dryers and exhaust fans, such as range hoods and bathroom exhausts, so they shall operate at maximum speed. Do not operate a summer exhaust fan. Close fireplace dampers.
4. Light the heater following the lighting instructions. Adjust the thermostat for continued operation. Verify that combustion products are venting properly. After determining that the heater vents properly, return doors, windows, exhaust fans, and fireplace dampers to their previous conditions. If improper venting is observed, the venting system must be corrected.

☐ With the unit in operation, measure manifold gas pressure. See Paragraph 12.

☐ Turn the unit off and on, pausing two minutes between each cycle. Observe for smooth ignition.

☐ Place the "Owner's Envelope" containing the Limited Warranty, this booklet, and any control or optional information in an accessible location near the heater. Follow the instructions on the envelope.

DANGER: The gas burner in this gas-fired equipment is designed and equipped to provide safe and economically controlled complete combustion. However, if the installation does not permit the burner to receive the proper supply of combustion air, complete combustion may not occur. The result is incomplete combustion which produces carbon monoxide, a poisonous gas that can cause death. Safe operation of indirect-fired gas burning equipment requires a properly operating vent system which vents all flue products to the outside atmosphere. FAILURE TO PROVIDE PROPER VENTING WILL RESULT IN A HEALTH HAZARD WHICH COULD CAUSE SERIOUS PERSONAL INJURY OR DEATH.

Always comply with the combustion air requirements in the installation codes and in Paragraphs 6 and 7. Combustion air at the burner should be regulated only by manufacturer-provided equipment. NEVER RESTRICT OR OTHERWISE ALTER THE SUPPLY OF COMBUSTION AIR TO ANY HEATER. Indoor units installed in a confined space must be supplied with air for combustion as required by Code and in Paragraph 7 of this heater installation manual. MAINTAIN THE VENT SYSTEM IN STRUCTURALLY SOUND AND PROPERLY OPERATING CONDITION.

MAINTENANCE AND SERVICE

WARNING: If you turn off the power supply, turn off the gas. See Hazard Levels, page 1.

The material contained in the MAINTENANCE AND SERVICE Section of this manual is designed to aid a qualified service person in maintaining and servicing this equipment. This unit will operate with a minimum of maintenance. To ensure long life and satisfactory performance, a heater that is operated under normal conditions should be inspected and cleaned at the start of each heating season. If the heater is operating in an area where an unusual amount of dust or soot or other impurities are present in the air, more frequent maintenance is recommended.

When any service is completed, be careful to reassemble correctly to ensure that no unsafe conditions are created. When re-lighting, always follow the lighting instructions on the heater.

WARNING: Excessive dirt buildup on and inside the burner ports could cause fuel gas to spill out of the back of the burner tube causing gas odor inside the building. If uncorrected, fuel spilling out of the back of the burner tube could cause a fire or explosion. To prevent fuel gas from spilling from the back of the burners, clean the burner ports at least annually.

Maintenance Schedule - The following procedures should be carried out at least annually (See Figure 12 and Paragraphs 22-32.):

- Clean all dirt and grease from the primary and secondary combustion air openings (vents in cabinet panels).
- Clean the fan blade, fan guard, and motor.
- Clean the heat exchanger both internally and externally.
- Check the burners for scale, dust, or lint accumulation.
- Check the vent system for soundness. Replace any parts that do not appear sound.
- Check the wiring for any damaged wire. Replace damaged wiring. (See Paragraph 13 for replacement wiring requirements.)

NOTE: Use only factory-authorized replacement parts.

Figure 12 - Location of Controls - View of the Control Compartment (A Size 30 is illustrated; locations are approximately the same for other sizes but may appear out of proportion.)

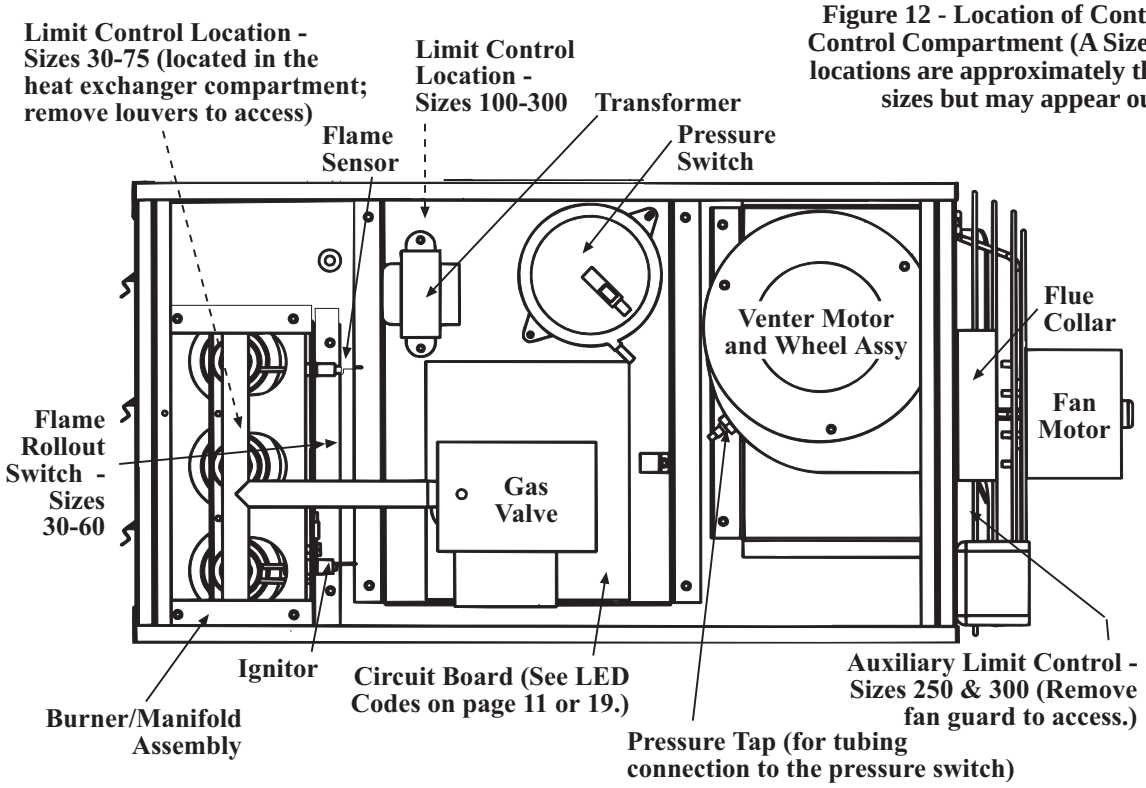

NOTE: If the heater has been changed so that the controls are on the left side (Paragraph 9), their locations will appear inverted. On Sizes 60-300, the ignitor *must* still be toward the bottom of the heater with the flame sensor toward the top.

22. Burner Removal

Instructions for Burner Removal (See Figure 12)

1. Shut the gas supply off ahead of the combination valve.
2. Turn off electric supply.
3. Remove the access panel; the vertical burner assembly is visible on the left side of the heater.
4. Open the union in the gas line before the gas valve.
5. Disconnect the flame sensor wire and the ignitor wire.
6. Remove the screws that attach the burner assembly to the front panel and inner wall. Pull the manifold/burner assembly out of the heater.

Clean the Burners (requires a wire brush, cleaning cloth, and an automotive type aerosol degreaser or refrigerant coil cleaner)

CAUTION: Use of eye protection is recommended.

Excessive dirt buildup on and inside the ports on the burner could cause fuel gas to spill out of the back of the burner tube. Fuel gas spilling out of the back of the burner tube will cause gas odor inside the building, and if not corrected, could eventually cause a fire/explosion hazard. To prevent fuel gas spilling from the back of the burners, clean the burner ports at least annually. Remove any soot deposits from the burner with a wire brush. Clean the ports with an aerosol degreaser and/or compressed air. Wipe the inside of the burner tube clean. (Cleaning the burner with an aerosol degreaser is highly recommended as the degreaser will retard future buildup of dirt.)

Inspect the cleaned burner for any damage or deterioration. If the burner has any damage or signs of deterioration, replace it.

Re-assemble the heater and test for proper operation.

23. Burner Orifices

Heaters are shipped with orifices of proper size and type for gas and altitude specified on the order. When ordering replacement orifices, give BTUH content, specific gravity of gas, and altitude shown on the rating plate, as well as the model and serial number of the heater.

24. Ignition System

To access the ignition system, follow Steps 1-3 in Paragraph 22.

Ignitor - Refer to Figure 12 and locate the ignitor (on the side of the burner rack). Disconnect the wire; remove the screw and the ignitor. Clean the ignitor assembly with an emery cloth.

Spark gap must be maintained to 1/8". See Figure 13.

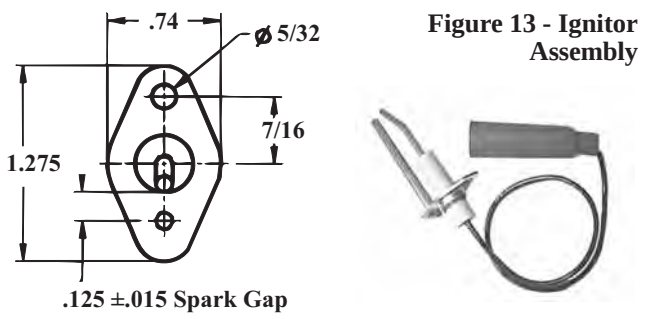

Figure 13 - Ignitor Assembly

Spark Gap Measurement

IMPORTANT: When re-assembling, the brown ground wire must remain attached to the ignitor.

CAUTION: Due to high voltage on the spark wire and electrode, do not touch when energized. See Hazard Levels, page 1.

Flame Sensor - Refer to Figure 12 and locate the flame sensor. Disconnect the wire; remove the screw and the flame sensor. Clean with an emery cloth.

Ignition Control - The integrated circuit board monitors the operation of the heater including ignition. Do not attempt to disassemble the circuit board. However, each heating season the lead wires should be checked for insulation deterioration and good connections.

Proper operation of the direct spark ignition system requires a minimum flame signal of 1.0 microamps as measured by a microampmeter.

For further information and check out procedure on the direct spark ignition system, refer to the manufacturer's control operating instructions supplied with the heater.

25. Heat Exchanger

The outside of the tubular heat exchanger can be cleaned from the front of the heater with an air hose and/or a brush. Remove all accumulated dust and grease deposits.

CAUTION: Eye protection is recommended.

The inner surfaces of the heat exchanger can be reached for cleaning with the burner and venter assemblies removed (See Figure 12 and Paragraph 21). Clean with a long furnace brush or a heavy wire to which steel wool has been attached. Brush inside each heat exchanger tube until all foreign material is removed. A flashlight is helpful in examining the inside of the tubes.

26. Fan

Remove dirt and grease from the motor. Remove dirt and grease from the fan guard and blades. Use care when cleaning the fan blades to prevent causing misalignment or imbalance. Check that the hub of the fan blades is secure to the shaft.

Follow these instructions for replacement of the fan guard, fan motor and/or fan blades.

1. If the heater is installed, turn off the gas and disconnect the electric power.
2. Remove the access panel or 2x4 junction box cover. Disconnect the fan motor wires.
3. Remove the assembled parts (the fan guard, the motor and the fan blade).
4. Disassemble and replace whatever parts are needed and reassemble using whatever part(s) are being replaced and the original parts. If the fan guard is being replaced, it is **important** that the same hardware be used for attaching the motor to the fan guard as was used with the original guard. These screws are especially made to cut through the coating on the fan guard to provide adequate grounding for the motor.

   Be sure the fan blade is in the proper position on the shaft; refer to the illustration and table in Figure 14.

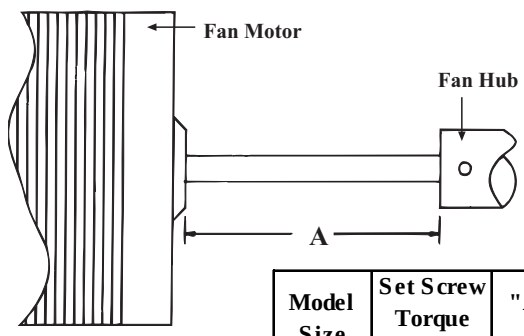

Model Size	Set Screw Torque (Inch-Lbs)	"A" Hub to Motor
30, 45	80 ± 10	1-1/8"(29mm)
60, 75, 100, 125	120 ± 10	2" (51mm)
150, 200	150 ± 10	2" (51mm)
250, 300	150 ± 10	3-1/4"(83mm)

Figure 14 - Proper Position of the Fan Blade on the Motor Shaft

   Position the assembly on the heater. Attach the fan guard. (**IMPORTANT**: If replacing the fan guard, use the screws that held the original fan guard. These specially designed screws will cut through the coating on the fan guard to provide a ground for the fan motor.)

   Rotate the fan blade to check for adequate clearance. If adjustment is required, loosen the mounting screws, re-position the fan guard, and tighten the screws. Rotate the fan blade and re-check for adequate clearance. Repeat this procedure until the assembly is positioned properly.
5. Reconnect the fan motor wires and replace the access panel.
6. Restore power to the heater and turn on the gas. Light, following the instructions on the lighting instruction plate. Check for proper operation.

27. Venter Motor

Remove dirt and grease from the motor housing. Power venter motor is permanently lubricated.

The integrated circuit board controls and monitors operation of the venter motor. If the contacts fail to close the venter motor will not run. If the contacts fail to open, the venter motor will not shut off, preventing the combustion air pressure switch from opening.

28. Operating Gas Valve

The gas valve requires no field maintenance except careful removal of external dirt accumulation and checking of wiring connections. Instructions for testing pressure settings are in Paragraph 12.

WARNING: The operating valve is the prime safety shutoff. All gas supply lines must be free of dirt or scale before connecting to the unit to ensure positive closure. See Hazard Levels, page 1.

29. Limit Control

If it is determined that the limit control needs replacing, use only a factory-authorized replacement part that is designed for the size of heater. To access the limit control on Sizes 30-75, remove the louver assembly from the front of the heater. On Sizes 100-300, the limit control is accessible in the control compartment.

Sizes 250 and 300 have an auxiliary limit control. To access the additional limit on Size 250 and 300 heaters, remove the fan guard.

For approximate limit locations, see Figure 12, page 15.

30. Combustion Air Pressure Switch

See Figure 12, page 15, for location. If it is determined that the pressure switch needs replacing, use only the factory-authorized replacement part that is designed for the size of heater being serviced.

31. Flame Rollout Switch

Models FT 30, 45 and 60 are equipped with a flame rollout safety switch. The flame rollout switch is a temperature activated manually reset, limit switch. The switch is mounted on the side of the burner box in a location that senses temperature in a central horizontal location at the rear of the burner assembly.

If the flame rollout switch activates to shutdown the heater, the cause must be corrected.

If it is determined that the flame rollout switch needs replacing, use only the factory-authorized replacement part that is designed for use on this heater.

32. Vent System

Check the vent system at least once a year. Inspection should include all joints, seams, and the vent cap. Replace any defective parts.

33. Troubleshooting

Check the Circuit Board - The integrated circuit board monitors the operation of the heater and includes an LED signal that indicates normal operation and various abnormal conditions. If the heater fails to operate properly, check this signal to determine the cause and/or to eliminate certain causes.

Do not attempt to repair the integrated circuit board; it does not have any field replaceable components.

Circuit Board LED Codes

Slow Flash ..... Normal Operation, No call for heat
Fast Flash ..... Normal Operation, Call for heat
2 Flashes ..... System Lockout, Failed to detect or sustain flame
3 Flashes ..... Pressure Switch Open or Closed
4 Flashes ..... High Limit or Flame Rollout Switch Open
5 Flashes ..... Flame Sensed and Gas Valve not energized
Steady On ..... Internal Failure - Replace the circuit board

PROBLEM	PROBABLE CAUSE	REMEDY
Venter motor will not start	**1.** No power to unit.	**1.** Turn on power, check supply fuses or circuit breaker.
	2. No 24 volt power to venter relay.	**2.** Turn up thermostat; check control transformer output.
	3. Integrated circuit board defective.	**3.** Replace integrated circuit board.
	4. Defective motor.	**4.** Replace motor.
Burners will not light	**1.** Manual valve not open.	**1.** Open manual valve.
	2. Air in the gas line.	**2.** Bleed gas line.
	3. Gas pressure too high or too low.	**3.** Correct supply pressure is 5" - 14" w.c. for natural gas or 11" - 14" w.c. for propane gas.
	4. No Spark:	**4.**
	a) Loose wire connections	a) Be certain all wire connections are solid.
	b) Transformer failure	b) Be sure 24 volts is available.
	c) Incorrect spark gap.	c) Maintain spark gap at 1/8".
	d) Spark cable shorted to ground.	d) Replace worn or grounded spark cable.
	e) Spark electrode shorted to ground	e) Replace if ceramic spark electrode is cracked or grounded.
	f) Burners not grounded	f) Make certain integrated circuit board is grounded to ignitor.
	g) Circuit board not grounded.	g) Make certain integrated circuit board is grounded to furnace chassis.
	h) Faulty integrated circuit board	h) If 24 volt is available to the integrated circuit board and all other causes have been eliminated, replace board.
	5. Lockout device interrupting control circuit by above causes.	**5.** Reset lockout by interrupting control at the thermostat or main power.
	6. Faulty combustion air proving switch.	**6.** Replace combustion air proving switch.
	7. Main valve not operating.	**7.**
	a) Defective valve	a) If 24 volt is measured at the valve connections and valve remains closed, replace valve.
	b) Loose wire connections	b) Check and tighten all wiring connections.
	8. Integrated circuit board does not power main valve.	**8.**
	a) Loose wire connections	a) Check and tighten all wiring connections.
	b) Flame sensor grounded	b) Be certain flame sensor lead is not grounded or insulation or ceramic is not cracked. Replace as required.
	c) Incorrect gas pressure	c) Correct supply pressure is 5" - 14" w.c. for natural gas or 11" - 14" w.c. for propane gas.
	d) Cracked ceramic at sensor	d) Replace sensor
Burners cycle on and off	**1.** Gas pressure too high or too low.	**1.** Correct supply pressure is 5" - 14" w.c. for natural gas or 11" - 14" w.c. for propane gas.
	2. Burners not grounded	**2.** Make certain integrated circuit board is grounded to ignitor.
	3. Circuit board not grounded.	**3.** Make certain integrated circuit board is grounded to furnace chassis.
	4. Faulty integrated circuit board	**4**. If 24 volt is available to the integrated circuit board and all other causes have been eliminated, replace board.
	5. Faulty combustion air proving switch.	**5.** Replace combustion air proving switch.
	6. Flame sensor grounded	**6.** Be certain flame sensor lead is not grounded or insulation or ceramic is not cracked. Replace as required.
	7. Cracked ceramic at sensor	**7**. Replace sensor
	8. Incorrect polarity	**8**. Reverse 115V line connections at ignition control module.

33. Troubleshooting (cont'd)

PROBLEM	PROBABLE CAUSE	REMEDY
No heat (Heater Operating)	**1.** Incorrect manifold pressure or orifices. **2.** Cycling on limit control. **3.** Improper thermostat location or adjustment.	**1.** Check manifold pressure (See Paragraph 12). **2.** Check air throughput. **3.** See thermostat manufacturer's instructions.
Cold air delivered	**1.** Incorrect manifold pressure.	**1.** Check manifold pressure (See Paragraph 12).
Motor will not run	**1.** Circuit open. **2.** Defective integrated circuit board. **3.** Defective motor.	**1.** Check wiring and connections. **2.** Replace board. **3.** Replace motor.
Motor turns on & off while burner is operating (See below)	**1.** Motor overload device cycling on and off.	**1.** Check motor load against motor rating plate. Replace motor if needed.
Fan motor cuts out on overload	**1.** Low or high voltage supply . **2.** Defective motor. **3.** Poor air flow. **4.** Defective bearing or lubrication.	**1.** Correct electric supply. **2.** Replace motor. **3.** Clean motor, fan and fan guard. **4.** Lubricate bearings or replace motor.

FOR SERVICE OR REPAIR, FOLLOW THESE STEPS IN ORDER:

FIRST: **Contact the Installer**

Name _____

Address _____

_____

_____

Phone _____

SECOND: **Contact the nearest distributor** (See Yellow Pages). If no listing, contact Authorized Factory Representative, 1-800-695-1901 (Press 1).

THIRD: **Contact** REZNOR®/ Thomas & Betts Corporation
150 McKinley Avenue
Mercer, PA 16137
Phone: (724) 662-4400

Model No. _____

Unit Serial No. _____

Date of Installation _____

800-695-1901 **www.RezSpec.com**

©2004 , All rights reserved. Printed in the U.S.A.
MANUFACTURER OF HEATING, COOLING, AND VENTILATING SYSTEMS
Trademark Note: Reznor® is registered in the United States and other countries.
804 OG POD Form RZ-NA-I-FT

REZNOR®

North America

Media	

AP or UEAS.

Images | Videos

Literature

Brochures
1 File

Technical Data
1 File

Installation/Parts/Service
20 Files

Other Files
1 File

Replacement Parts

Applies to: **Model F and Model FE Fan-Type, Gas-fired Unit Heaters and Model B and Model BE Blower-Type, Gas-fired Unit Heaters**

IMPORTANT

1. **Always include complete heater model and serial number so that any specification change can be considered for parts shipment. It can save time and expense.**
2. **Specifications are subject to change without notice.**
3. **We reserve the right to substitute functional replacements**
4. **Order by Part Number. Do not order by Option Number.**

Model F, Fan-Type, Gravity Vent

Model B, Blower-Type, Gravity Vent

***Model FE, Fan-Type, Power Vent**

***Model BE, Blower-Type, Power Vent**

*Models FE and BE are no longer manufactured.

Index

A
Air Shutter 12

B
Belt 10, 11
Belt Guard 19
Blocked Vent Switch 4
Blower 8
Blower Components 8
Blower/Filter Cabinet 19
Blower Guard 19
Burner Only 12
Burner Orifices 13
Burner Rack 12
Burner Rack Support 12
Burner Rack Supports 16

C
Cabinet Parts 16
Capacitor 8, 14, 15
Carryover 12
Circuit Breaker 4
Contactor 9, 10

D
Date of Manufacture 3
Dates of Introduction 3
Downturn Nozzle Kit 20
Drive 10
Duct Flange 18

E
Electrical Components 4

F
Fan Blades 7
Fan Components 7
Fan Control 4
Fan Guard 7
Fan Motor Spacing 7
Filters 19
Flame Sensor 13
Fuse 4

G
Gasket Kit 16
Guards 19

H
Hanger Kits 18
Heat Exchangers 16
Hinge Pin Assy 16

I
Ignition Controllers 5
Ignition Conversion Kits 5

K
Key 8

L
Latch Fastener 16
Limit Control 4
Vertical Louver Assy 18
Low Ambient Fan Control 6

M
Manifold 12
Model No. 2
Belt-Driven Motor 8
Blower Motor 9
Blower Motors 10
Direct Drive Motor 8
Fan Motor 7
Venter Motor 14
Motor Adjustment Mounting Assy 8
Motor Band 8
Motor Mounting Bracket 8
Motor Support 8
Multiple Heater Control 6

N
Nozzles 20

O
Burner Orifices 12
Overload 9, 10

P
Paint 18
Match-Lit Pilot 13
Spark Pilot 13
Pilot Shield 12
Polytube Adapters 20
Pressure Switch 14, 15
Blower Pulley 10, 11
Motor Pulley 10, 11

R
Rating Plate 2
References 3
Relay 4, 6, 14, 15
Replacement Parts Tag 2
Restrictor 8

S
Sensing Tube 14
Serial Number 2, 3
Starter 9
Starters 10
Summer/Winter Switch 4
Swivel Connection 18

T
Terminal Strip 4
Thermocouple 13
Thermostat Bracket 5
Thermostats 5
Stepdown Transformer 6
Transformers 5

V
Shut-off Valve 12
Vent Cap 14, 15, 18
Vent Damper 5
Venter 14
Venter Fan Blade 14
Venter for Gravity-Vent Units 15
Venter Gasket 14
Venter Motor and Wheel Assembly 14
Venter Wheel 14

W
Warranty 3

Example of a Rating Plate

MADE IN MEXICO

UNIT HEATER **NRTL**

CATEGORY I

FOR INDUSTRIAL/COMMERCIAL USE ONLY
ANSI Z83.8 [**AA**] - [**A**] CSA 2.6 [**AA'**] - [**A'**] UNIT HEATER
MODEL [B] [C]
SERIAL NO.
[D] VOLTS [D] PH [D] HZ MAXIMUM TOTAL INPUT [D] AMPS
TYPE OF GAS: [E]
ORIFICE SIZE [**F**] DRILL HAS BEEN FACTORY ADJUSTED FOR USE AT [**G**] FEET [**H**] METERS OF ALTITUDE.

	SEA LEVEL	ALT. ADJUSTED
NORMAL INPUT	[**I**]	[**J**]BTU/HR.
THERMAL OUTPUT CAPACITY	[**K**]	[**L**]BTU/HR.
MINIMUM INPUT (-2 MODELS)	[**M**]	[**N**]BTU/HR.
NORMAL MANIFOLD PRESSURE		[**O**] IN.W.C.

MIN. PERMISSIBLE GAS SUPPLY PRESSURE FOR PURPOSE OF INPUT ADJUSTMENT. [**P**] IN.W.C.

CLEARANCES TO COMBUSTIBLE CONSTRUCTION: TOP-[**Q**], FLUECONNECTION-6", LEFT SIDE-18", RIGHT SIDE-18", BOTTOM-12" EXCEPT WHEN SUPPLIED WITH OPTIONAL DOWNTURN NOZZLE BOTTOM IS 42"
FOR ALTERNATE INSTALLATIONS USE THE LATEST EDITIONS OF THE APPROPRIATE STANDARD LISTED BELOW / INSTALL IN ACCORDANCE WITH REQUIREMENTS OF ENFORCING AUTHORITIES:

FOR AIRCRAFT HANGARS	USE STANDARD ANSI/NFPA 409
FOR PARKING STRUCTURES	USE STANDARD ANSI/NFPA 88A
FOR REPAIR GARAGES	USE STANDARD ANSI/NFPA 88B

THIS UNIT IS NOT FOR USE WITH DUCTS.
THIS UNIT IS NOT FOR USE WITH FILTERS.
THIS UNIT IS FOR USE WITH NATURAL GAS AND PROPANE. A CONVERSION KIT AS SUPPLIED BY THE MANUFACTURER, SHALL BE USED TO CONVERT THIS UNIT HEATER TO THE ALTERNATE FUEL.

Key to Rating Plate Information:

B = Model No. (Size)
C = Month and Year of Manufacture
D = Volts, Phase, Hertz and Maximum Total Input Amps
E = Type of Gas (Natural or Propane)
F = Burner Orifice Size
G and H = Elevation in Feet and Meters
I = Normal Input (BTUH) at Sea Level
J = BTUH Input Adjusted for Altitude
K = Thermal Output Capacity (BTUH) at Sea Level
L = BTUH Output Adjusted for Altitude
M = Minimum Input (BTUH) at Sea Level
N = BTUH Minimum Input Adjusted for Altitude
O = Normal Manifold Pressure (in. w.c.)
P = Minimum Gas Supply Pressure (in w.c.)
Q = Top Clearance (inches)

Serial No. Explanation - ALL Models **BEFORE** June, 2015 Example:

BMC	94	9B	N	12345
1	2	3	4	5

Key:
1 = Date of manufacturer (see table on page 3)
2 = Type of Pilot (Refer to Form P-VALVES)
3 = Gas Valve (Refer to Form P-VALVES)
4 = Type of Gas (N = Natural; L = Propane)
5 = Consecutive number

Model No. Suffixes:

-S = Stainless steel heat exchanger
-2 = Two-stage gas valve
-E = Intermittent spark Ignition (NOTE: Spark ignition required on all units effective 8/2008.)
-H = Factory equipped for high altitude operation (NOTE: A change in 2004 allowing altitude adjustment in the field eliminated the high-altitude factory-equipped options.

Serial No. Explanation - ALL Models **AFTER** June, 2015 Example:

BOG	3060	12345
1	4	5

Key:
1 = Date of manufacturer (see table on page 3)
2 = Plant of Manufacture (3060 = Mercer; 3062 = Monterrey)
3 = Consecutive number

Example of a Replacement Parts Tag

Replacement parts tags on unit heaters are for your convenience in identifying replacement part numbers. Always give the full Model No., Serial No., and Part No. with description when ordering replacement parts.

COMMON REPLACEMENT PARTS FOR:
MODEL: **FE100**
SERIAL NUMBER: **BAA65W7N12345**

Fan or Blower Motor	95548	Transformer	131988
Fan Blade	41004	Pilot	97534
Fan Control	123976	Gas Valve	170609
Limit Control	45602	Heat Exchanger	102285

WARNING

All parts are for use with the fuel identified on the unit rating plate. If the unit has been converted to other fuels, check with the dealer for proper fuel-carrying parts. Installation of improper parts can cause death or injury or property loss.

First Element of the Serial Number - Date of Manufacture

Year	Jan	Feb	Mar	Apr	May	June	July	Aug	Sept	Oct	Nov	Dec
1988	ANA	ANB	ANC	AND	ANE	ANF	ANG	ANH	ANI	ANJ	ANK	ANL
1989	AOA	AOB	AOC	AOD	AOE	AOF	AOG	AOH	AOI	AOJ	AOK	AOL
1990	APA	APB	APC	APD	APE	APF	APG	APH	API	APJ	APK	APL
1991	AQA	AQB	AQC	AQD	AQE	AQF	AQG	AQH	AQI	AQJ	AQK	AQL
1992	ARA	ARB	ARC	ARD	ARE	ARF	ARG	ARH	ARI	ARJ	ARK	ARL
1993	ASA	ASB	ASC	ASD	ASE	ASF	ASG	ASH	ASI	ASJ	ASK	ASL
1994	ATA	ATB	ATC	ATD	ATE	ATF	ATG	ATH	ATI	ATJ	ATK	ATL
1995	AUA	AUB	AUC	AUD	AUE	AUF	AUG	AUH	AUI	AUJ	AUK	AUL
1996	AVA	AVB	AVC	AVD	AVE	AVF	AVG	AVH	AVI	AVJ	AVK	AVL
1997	AWA	AWB	AWC	AWD	AWE	AWF	AWG	AWH	AWI	AWJ	AWK	AWL
1998	AXA	AXB	AXC	AXD	AXE	AXF	AXG	AXH	AXI	AXJ	AXK	AXL
1999	AYA	AYB	AYC	AYD	AYE	AYF	AYG	AYH	AYI	AYJ	AYK	AYL
2000	AZA	AZB	AZC	AZD	AZE	AZF	AZG	AZH	AZI	AZJ	AZK	AZL
2001	BAA	BAB	BAC	BAD	BAE	BAF	BAG	BAH	BAI	BAJ	BAK	BAL
2002	BBA	BBB	BBC	BBD	BBE	BBF	BBG	BBH	BBI	BBJ	BBK	BBL
2003	BCA	BCB	BCC	BCD	BCE	BCF	BCG	BCH	BCI	BCJ	BCK	BCL
2004	BDA	BDB`	BDC	BDD	BDE	BDF	BDG	BDH	BDI	BDJ	BDK	BDL
2005	BEA	BEB	BEC	BED	BEE	BEF	BEG	BEH	BEI	BEJ	BEK	BEL
2006	BFA	BFB	BFC	BFD	BFE	BFF	BFG	BFH	BFI	BFJ	BFK	BFL
2007	BGA	BGB	BGC	BGD	BGE	BGF	BGG	BGH	BGI	BGJ	BGK	BGL
2008	BHA	BHB	BHC	BHD	BHE	BHF	BHG	BHH	BHI	BHJ	BHK	BHL
2009	BIA	BIB	BIC	BID	BIE	BIF	BIG	BIH	BII	BIJ	BIK	BIL
2010	BJA	BJB	BJC	BJD	BJE	BJF	BJG	BJH	BJI	BJJ	BJK	BJL
2011	BKA	BKB	BKC	BKD	BKE	BKF	BKG	BKH	BKI	BKJ	BKK	BKL
2012	BLA	BLB	BLC	BLD	BLE	BLF	BLG	BLH	BLI	BLJ	BLK	BLL
2013	BMA	BMB	BMC	BMD	BME	BMF	BMG	BMH	BMI	BMJ	BMK	BML
2014	BNA	BNB	BNC	BND	BNE	BNF	BNG	BNH	BNI	BNJ	BNK	BNL
2015	BOA	BOB	BOC	BOD	BOE	BOF	BOG	BOH	BOI	BOJ	BOK	BOL
2016	BPA	BPB	BPC	BPD	BPE	BPF	BPG	BPH	BPI	BPJ	BPK	BPL
2017	BQA	BQB	BQC	BQD	BQE	BQF	BQG	BQH	BQI	BQJ	BQK	BQL
2018	BRA	BRB	BRC	BRD	BRE	BRF	BRG	BRH	BRI	BRJ	BRK	BRL
2019	BSA	BSB	BSC	BSD	BSE	BSF	BSG	BSH	BSI	BSJ	BSK	BSL
2020	BTA	BTB	BTC	BTD	BTE	BTF	BTG	BTH	BTI	BTJ	BTK	BTL

Literature References:

Contact for Factory Distributor for available literature forms

Form	Applies to	Installation Instructions for:	Form P/N
I-F/B	F/B	Heater Installation Manual	98126
I-F/B-HV	F/B 250, 300, 400	Horizontal/Vertical Vent Outlet	102860
I-F/B-HV125	F/B125	Horizontal/Vertical Vent Outlet	132794
I-FE/BE	FE/BE	Heater Installation Manual	98807
CP-F/B-GC	F/B/FE/BE	Gas Conversion Kits	99279
CP-F/B-IGN	F/B	Ignition Conversion Kits (match-lit to spark)	100550
I-F/B-PV	F/B	Optional Power Venter	97967
I-F/B-AS	F/B/FE/BE	Optional Air Shutters	98239
I-B-BF	B/BE	Optional Blower Cabinet	99714
I-B-BG	B/BE	Optional Guards	101542
I-B-DF	B/BE	Optional Duct Flange	101192
I-F/B-DN	F/B/FE/BE	Optional Downturn Air Nozzles	97926
I-F/B-LA	F/B/FE/BE	Optional Low Ambient Fan Control Relay	131134
I-B-PF	B/BE	Optional Polytube Adapters for Floor-Level Units	101694
I-B-PS	B/BE	Optional Polytube Adapters for Suspended Units	101500
I-F/B-R	F/FE/B/BE	Optional Relays	98149
I-B-SWB	B/BE	Optional Summer Fan Switch	101678
I-F-SWF	F/FE	Optional Summer Fan Switch	98294
I-F/B-VL	F/FE/B/BE	Optional Vertical Louvers	97925
I-F/B-X	F/FE/B/BE	Optional Stepdown Transformers	102265
P-VALVES	All	Ignition Controllers, Valves, & Serial No. Identification	263995

Dates of Introduction

Model	Introduction
F	AND (4/88)
FE	AND (4/88)
B	ANL (12/88)
BE	ANL (12/88)

Warranty - Models F, FE, B, BE

One-year limited warranty on the heater

Nine-year extended limited warranty on the heat exchanger, drafthood, flue baffle assembly, flue collection box, and burners

Four-year extended limited warranty on operational parts (except blower belts)

Electrical Components

Code	Description		Size								
			25	50	75/100	125	130/165	200	250	300	400
1	ECO Limit Control*	F/FE	**131449** Thermodisc #G4AP0202110C, 109°C (replaces 96513)		**82414**, Thermodisc #G4AP0200152C, 152°C						
*Not on any units after 2008. F&B with match-lit pilot have an ECO limit control. FE&BE and F&B with optional spark pilot manufactured prior to 8/99 have an ECO limit control.		B/BE			**131450**, Thermodisc #G5AP0201152C, 152°C (replaces 82414 on blower heaters)						
2	Limit Control - heaters mfgd beginning 9/96 (Serial No. Date Code AVI)	FE	**85449**, 200°F				**82091**, 160°F	**85449**, 200°F	**45602**,180°F		
		F	**85449**, 200°F			**45602**, 180°F	**82091**, 160°F	**85449**, 200°F	**45602**,180°F		
		BE	**45602**, 180°F			**100799**, 150°F					
		B	**45602**, 180°F	**85449**, 200°F		**100799**, 150°F					
	Limit Control - heaters mfgd prior to 9/96	FE	**85449**, 200°F				**82091**, 160°F	**85449**, 200°F	**45602**, 180°F		
		F	**85449**, 200°F		**45602**, 180°F		**82091**, 160°F	**85449**, 200°F	**45602**, 180°F		
		BE	**45602**, 180°F			**100799**, 150°F					
		B	**45602**, 180°F			**100799**, 150°F					
3	Fan Control, Thermodisc #60T12 with Bracket (See **NOTE** below.)	F/FE	**123974**, 105/135°F (replaces 96387)		**123976**, 95/135°F (replaces 114009)			**123974**, 105/135°F (replaces 96387)			
		B/BE	**123975**, 95/150°F (replaces 100857)								
4	Summer/Winter Switch Assembly (Same as Option CH1)	F/FE	**98484** (Includes switch and wiring)								**98485**
		B/BE	**101679** (Includes switch, relay, and wiring)								
5	2-Screw Terminal Strip		**96041** - for 24V connections								
6	4-Screw Terminal Strip		**96511** - for 24V connections								
7	RBM Relay		Units manufactured beginning 9/11, **P/N18549** (included in 2-stage control options)								
			For units manufactured before 9/11 (Serial No. Date Code BKI), order **Replacement Kit P/N 263527** (Relay is standard in BE & FE and with 2-stg control options.)								
8	Time Delay Relay		--	--	**97479**, Thermodisc #305048						

NOTE: Temperature settings on the current replacement fan controls are different from the previous models because of a change in construction of the switch. However, these controls are interchangeable and will perform a nearly identical control function.

Code 1 - ECO Device

Code 2 - Limit Control, Automatic Reset

Code 3 - Fan Control Assembly

Code 4 - Summer/Winter Switch

Code 5 - Two-Screw Terminal Strip Connector, P/N 96041

Code 6 - Four-Screw Terminal Strip Connector, P/N 96511

Code 7 - RBM Relay, P/N 18549

Code 8 - Time Relay Delay, P/N 97479

Code	Description		Size					
			25	50	75/100	125	130/165/200	250/300/400
9A	Blocked Vent Switch, Thermodisc #36Tx46, 1/2" Snap Disk, manual reset, 1/4" QC (standard on gravity-vent models beginning April 1991 - Applies to Standard single units only (See Code 9B, Gasket)		**112751** - Setting Open @ 200°F #6215	**112752 -** Setting Open @ 225°F #6217	**121275** - Setting Open @ 275°F #6279			
	Blocked Vent Switch, Thermodisc #36Tx46, 1/2" Snap Disk, manual reset, 1/4" QC (standard on gravity-vent models beginning April 1991 - Applies to optional two-stage units only (See Code 9B, Gasket)		--	--	**112752** - Setting Open @ 225°F #6217			
9B	Blocked Vent Gasket - for heaters with single-stage controls		--	(2)**121341**	--	--	--	--
	Blocked Vent Gasket - for heaters with optional two-stage controls		--	--	(1) **121341**	--	(1) **121341**	--
10	Circuit Breaker W58XB1A4A8	(Fusible disconnect Option AI1)	**146831**					
11	On/Off Switch, McGill 4125-0004		**146830**					

Code 9A - Blocked Vent Switch

Code 10 - Circuit Breaker, P/N 146831

Code 11 - On/Off Switch, P/N 146830

Code 12 - Fuse and Fuse Holder for Blower Units with Optional 575 Volt

Fuse, 2.5 amp, 2501, #3120, **P/N 60242**

Fuse Holder, Buss HTB-481, **P/N 60241**

Code 13 - Control Transformers

Description	P/N	Used on Models
115/1/60, 12VA, Basler #BE141615-RAD	**131988** (replaces 102706)	F 25-400 Single-Stage, March-Lit Pilot
		B 25-300 Single-Stage, Match-Lit Pilot
115/1/60, 20VA, Basler #BE141620-RAD	**132204** (replaces 102709)	FE 25-400 Single Stage, Spark Pilot
		BE 25-300 Single-Stage, Spark Pilot
		F 25-400 Single Stage, Spark Pilot
		B 25-300 Single-Stage, Spark Pilot
		F 75-400 Two-Stage, Match-Lit Pilot
		B 75-300 Two-Stage, Match-Lit Pilot
		BE 400 Two-Stage, Spark Pilot
		B and BE 400 with Optional 575 3ph/60Hertz
115/1/60, 35VA, Basler #BE141640-RAK	**102708** (replaces 96507)	F 75-400 Two-Stage, Spark Pilot
		B 75-300 Two-Stage, Spark Pilot
		FE 75-400 Two-Stage, Spark Pilot
		BE 75-300 Two-Stage, Spark Pilot
208/230/1/60; 208/230/3/60; 35VA, Basler #BE21537004	**103500** (replaces 96508)	B 400 Single-Stage, Match-Lit Pilot
		B 400 Two-Stage, Match-Lit Pilot
		B 400 Single-Stage, Spark Pilot
		B 400 Two-Stage, Spark Pilot
		BE 400 Single-Stage, Spark Pilot
		F 130-400 with Optional 208/230V/1Ph/60 Hertz
		FE 130-400 with Optional 208/230V/1Ph/60 Hertz
		B 50-400 with Optional 208/230V/1Ph/60 Hertz
		BE 50-400 with Optional 208/230V/1Ph/60 Hertz
		F 25-400 with Optional 230V/1Ph/50 Hertz
		B 75-400 with Optional 208/230V/3Ph/60 Hertz
		BE 130-400 with Optional 208/230V/3Ph/60 Hertz
460/3/60, 35VA, Basler #BE641640-RAK	**103495** (replaces 96509)	B 75-400 with Optional 460V/3Ph/60 Hertz
		BE 130-400 with Optional 460V/3Ph/60 Hertz
600/3/60, 1/4 KVA, Type HSD, Primary/120-240V Secondary, Hevi-Duty #10A250	**113556**	B/BE 130-400 with Optional 575V/3Ph/60 Hertz

Code 13 - Control Transformer

Code 14 - Automatic Vent Damper with 8' Wiring Harness for Model F and B (Same as Option AV7; requires ignition controller with lockout - see Code 16.)

F/B Size	Vent	P/N
25, 50	4"	**234005**
75	5"	**234006**
100	6"	**234007**
125	7"	**234008**
165, 200	8"	**234009**
250, 300	10"	**234010**
400	12"	**234011**

Ignition Controllers and Conversion Kits

Code 15 - Ignition Controller for Intermittent Spark Pilot System without Lockout, P/N 257009 (Serial No. Code 94)

To replace a previously used recycling ignition controllers without lockout (Serial No. Codes 62 and 66), order Replacement Kit, P/N 257472

Code 16 - Ignition Controller with Lockout, P/N 257010 (Serial No. Code 95)

To replace a previously used ignition controllers with lockout (Serial No. Codes 63, 65 and 84), order Replacement Kit, P/N 257473

Ignition Conversion Kits for Models F & B with Match-Lit Pilot			
Model	**Fuel**	**Spark Kit with or without lockout**	**P/N**
F/B 25-165	Natural Gas	without Lockout	**100525**
F/B 200-250			**100526**
F 300-400, B 300			**100527**
B 400			**102348**
F/B 25-165	Natural Gas	with Lockout	**100528**
F/B 200-250			**100529**
F 300-400, B 300			**100530**
B 400			**102349**
F/B 25-200	Propane	with Lockout	**100531**
F 250-400, B 250-300			**100532**
B 400			**102350**

Optional Thermostats & Thermostat Bracket

Code 17 - 1-stage, 24 volt, 50-90°F, P/N 255350 (Same as Option CL1)

Code 18 - 2-stage, 24 volt, digital, P/N 220630 (Same as Option CL22)

Code 19 - Thermostat Bracket, Package P/N 98524 (Same as Option CM3)

***Notes:**
1) Do not increase the length of the coupling.
2) Due to possible vibration, do not use mercury switch thermostat with this bracket.

Component Description	P/N
2x4 Electrical Box	**17782**
1/" Coupling*	**7447**
1/2" Threaded Nipple	(2) **3618**
Bracket	**98353**

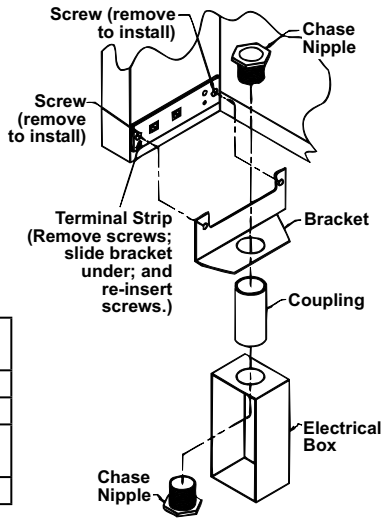

Electrical Components (cont'd)

Code 20 - Low Ambient Fan Control Relay Kit, P/N 113779

Kit Components:		
Qty	**P/N**	**Description**
1	**114007**	Time Delay Relay Assembly (pre-wired consisting of Time Delay Relay Thermodisc #305055, P/N 97479, and four wire assemblies)
2	**82485**	Screws, #4 x 3/8" long (for attaching relay assy)
1	**16354**	Wire Nut
1	**98117**	Open/Closed Bushing

Application: The low ambient fan control relay kit is designed to prevent false cycling of the fan/blower on unit heaters installed in areas with ambient temperature of less than 40°F.

Code 21 - Optional Multiple Heater Control Kits

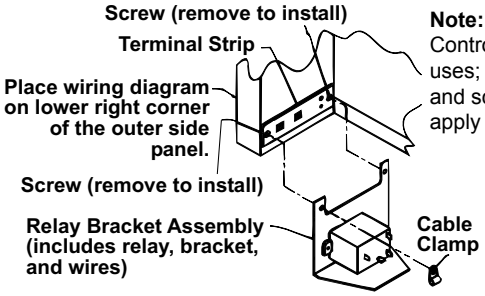

Note: Multiple Heater Control Kits have multiple uses; they include spacers and screws that do not apply to these models.

	Qty	P/N	Component Description
Code 21A - Package P/N 102248 (Same as Option CL31)	1	**102708**	Transformer 35VA- Basler #BE141640-RAK
	2	**103152**	Sheetmetal Screws, #6 x 1-1/2" lg
	2	**111233**	Tinnerman Clips,#C1110-62
	2	**102243**	Relay Assembly (*Relay only **P/N 18549**)
	2	**16228**	Cable Clamp
	2	**131127**	Wiring Diagram Label
Code 21B - Package P/N 102249 (Same as Option CL32)	**Qty**	**P/N**	**Component Description**
	1	**102243**	Relay Assembly (*Relay only **P/N 18549**)
	1	**16225**	Cable Clamp 3/16"
	1	**131127**	Wiring Diagram Label

* If replacing only relay, P/N 14747 (used prior to 9/2011), order Kit **P/N 263527**.

Code 22- Optional Stepdown Transformer Kits - All Models F&FE and Models B&BE Sizes 25-100 with Standard Direct Drive Motors

*Option CA1 is a 115 volt power venter.

Option	Voltage	Applies to	P/N by Size	25	50	75	100
CF1	208/115	Model B Gravity Vent	**Option Pkg**	**261244**		**261246**	
			w/Transformer	**260928, .50 KVA**		**223462, 1.0 KVA**	
CF2	230/115		**Option Pkg**	**102267**		**102269**	
			w/Transformer	**11100, .50 KVA**		**16065, 1.0 KVA**	
CF4	460/115		**Option Pkg**	**102267**		**102269**	
			w/Transformer	**11100, .50 KVA**		**16065, 1.0 KVA**	
CG1	208/115	Model B w/CA1* Power Vent & Model BE	**Option Pkg**	**261244**		**261246**	
			w/Transformer	**260928, .50 KVA**		**223462, 1.0 KVA**	
CG2	230/115		**Option Pkg**	**102267**		**102269**	
			w/Transformer	**11100, .50 KVA**		**16065, 1.0 KVA**	
CG4	460/115		**Option Pkg**	**102267**		**102269**	
			w/Transformer	**11100, .50 KVA**		**16065, 1.0 KVA**	

Option	Voltage	Applies to	P/N by Size	25	50	75	100	125	165	200	250	300	400
CF1	208/115	Model F Gravity Vent	**Option Pkg**	**261243**			**261244**						**261246**
			w/Transformer	**260927, .25 KVA**			**260928, .50 KVA**						**223462, 1.0 KVA**
CF2	230/115		**Option Pkg**	**102266**			**102267**						**102269**
			w/Transformer	**11279, .25 KVA**			**11100, .50 KVA**						**16065, 1.0 KVA**
CF4	460/115		**Option Pkg**	**102266**			**102267**						**102269**
			w/Transformer	**11279, .25 KVA**			**11100, .500 KVA**						**16065, 1.0 KVA**
CG1	208/115	Model F with CA1* Power Vent & Model FE	**Option Pkg**	**261243**	**261244**			**261245**			**261244**	**261245**	**261246**
			w/Transformer	**260927, .25 KVA**	**260928, .50 KVA**			**260929, .75 KVA**			**260928, .50 KVA**	**260929, .75 KVA**	**223462, 1.0 KVA**
CG2	230/115		**Option Pkg**	**102266**	**102267**			**102268**			**102267**	**102268**	**102269**
			w/Transformer	**11279, .25 KVA**	**11100, .50 KVA**			**11217, .75 KVA**			**11100, .50 KVA**	**11217, .75 KVA**	**16065, 1.0 KVA**
CG4	460/115		**Option Pkg**	**102266**	**102267**			**102268**			**102267**	**102268**	**102269**
			w/Transformer	**11279, .25 KVA**	**11100, .50 KVA**			**11217, .75 KVA**			**11100, .50 KVA**	**11217, .75 KVA**	**16065, 1.0 KVA**

Components Common to All Optional Stepdown Transformer Packages Listed in Tables Above

Qty	P/N	Description
1	102261	Bracket Assembly
1	113275	1/2" lg Sheetmetal Screw
1	16247	5/16 x 3/4" lg Hex Head Cap Screw
1	1333	5/16 Lockwasher
2	1087	Flat Washers
1	2039	BX Cable 3/8 x 18" long
1	16202	Straight Connector

Qty	P/N	Description
1	1417	90° Connector
2	16358	Anti-Short Bushings
1	5566	Black Wire, 14 ga x 30" long, 105°C
1	32525	White Wire, 14 ga x 30" long, 105°C
1	102264	Green Wire, 14 ga x 30" long, 105°C
10	16354	Twist-on Wire Connectors

Fan Components -- Models F and FE

Code	Description	Size										
		25	50	75	100	125	130	165	200	250	300	400
26A	Full Fan Guard (See "Fan Guard Replacement" below.)	**110907**		**110908**	**110910**	**132363**	**110910**	**136209** (replaces 110911)	**110912**	**176647** (replaces 131404 and 110914)		**176648** *(replaces 110915 & 131405)*
26B	Fan Guard Plate (2)	--	--	--	--	**133977**	--	**133978**	--	**176151**		**176152**
26C	Fan Guard Hardware	(4) **96450** screws w/washers				--	(4) **96450**	--	(4) **96450**	(8) **113275**, #10-32 1/2" lg hex head		
26D	Fan Guard Isolator Assy (4)	--	--	--	--	**96451**	--	**96451**	--	**96451**		
26E	Washer for Code 26D (4)	--	--	--	--	**96452**	--	**96452**	--	**96452**		
27	Motor Adapter Plate	--	--	--	--	**96452**	--	**96452**	--	**176523**		
28	Fan Motor, 115/1/60, Open (**NOTE**: Replacement 208/230/1/60 fan motor is no longer available.)	**96286**	**96287**	**96288**	**95548**		**95547** 1/20HP			**95546** 1/6HP	**147913** 1/4HP (replaces 95545)	**156275** 1/2HP
	Fan Motor, 115/1/60, Enclosed	**96286**	**100992**		**102380** 1/8HP				**102381** 1/6HP	**137044** 1/4HP (replaces 115866)		--
	Fan Motor, 230/1/50 Hertz (Opt AK11) Model F only	**112675**			**121277**					**172794** Assy including motor P/N 155063		
	Fan Motor, .018HP, 115/1, School Option (Opt AL2B) for Model F50 only	--	**174403**	--	--	--	--	--	--	--	--	--
29	Fan Blades (For proper shaft placement, see Fan Motor Spacing Table below.)	**132465** (replaces 96377)	**129853** (replaces 96378)	**96379**	**41004**	**131970**	**104692** (replaces 48692)	**96380**	**96381**	**96382**	**96383**	**96384**
	Fan Blades, 5/16" bore, 10" dia, 5 blades, 34o pitch, School Option (Opt AL2B) for Model F50 only	--	**129853**	--	--	--	--	--	--	--	--	--

Model FE illustrating one-piece Fan Guard

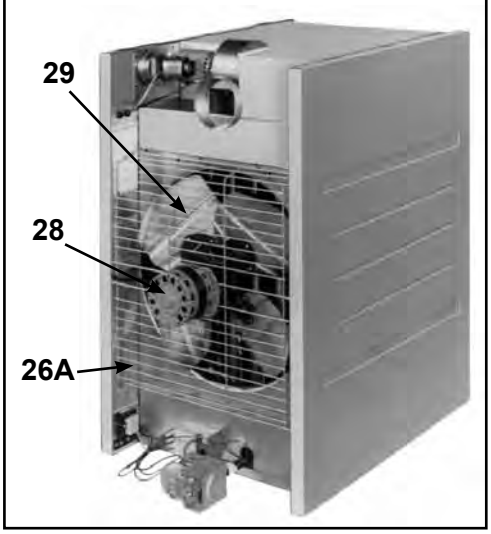

Model	Date of Manufacture	Standard Fan Guard	Was available as an Option
F	4/88 - 10/90	Lower Half only	Upper Half
	After 10/90	One-Piece Full Fan Guard	None
FE	4/88 - 10/89	Lower Half only	Upper Half
	10/89 - 10/90	Both Upper and Lower Halves	None
	After 10/90	One-Piece Full Fan Guard	None

Fan Guard Replacement - The upper and lower fan guard halves are no longer available. If adding an "upper half" or replacing a fan guard, it is necessary to install the full fan guard (Code 26A). To make this replacement, follow these instructions.

1. If the heater is installed, turn off the gas and disconnect the electric power.
2. Remove the left outer side panel (left when facing the rear of the unit). Disconnect the fan motor wires.
3. If present, remove the tension-mounted upper half fan guard.
4. Remove the four screws for attaching the fan guard. Remove the lower half fan guard, the motor, and the fan blade.
5. Assemble the new full fan guard, the motor and the fan blade. To Assure proper grounding of the motor, it is important that the same hardware be used for attaching the motor to the fan guard as was used with the original guard.
   Check fan blade position on the shaft; see illustration below and Table left.
   Position the assembly on the heater.
   Attach the fan guard at the center mounts using the screws that held the old fan guard. (It is important that you use these specially designed screws because they will cut through the coating on the fan guard to provide a ground for the fan motor.)
   Rotate the fan blade to check for adequate clearance. If adjustment is required, loosen the mounting screws, re-position the fan guard, and tighten the screws. Rotate the fan blade and re-check for adequate clearance. Repeat this procedure until the assembly is positioned properly.
6. Drill the required upper and lower mounting holes. Attach the new fan guard at all upper and lower mounting points using field-supplied sheetmetal screws.
7. Reconnect the fan motor wires and replace the outer side panel.
8. Restore power to the heater and turn on the gas. Light, following the instructions on the lighting instruction plate. Check for proper operation.

Fan Motor Spacing

Size	Electrical Supply	Fan Blade P/N	Set Screw Torque In-Lbs	**"A"** Hub to Motor Spacing
25	60 Hz	**132465**	80 ±10	1-1/4"
	50 Hz*			3-1/4"
50	60 Hz	**129853**	80 ±10	3/8"
	50 Hz*			3-1/4"
75	60 Hz	**96379**	80 ±10	1/8"
	50 Hz*			3-1/4"
100	50* or 60 Hz	**41004**	120 ±10	2-1/2"
125		**131970**		
130		**104692**		
165		**96380**	150 ±10	
200		**96381**		
250		**96382**		
300		**96383**		
400		**96384**		

*Only gravity-vented F models are available with 50 Hz.

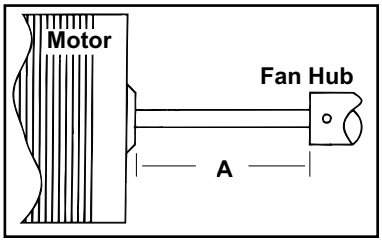

Blower Components - Models B and BE 25-100 with Direct Drive Motor

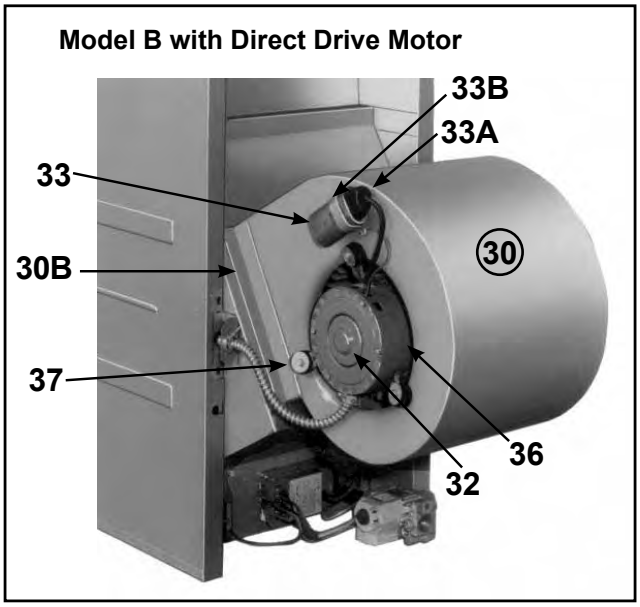

Code	Description	Size			
		25	50	75	100
30	Blower Assy including blower (Code 30A), mounting angle (Code 30B), and restrictors	**100897**	**100898**		**100899**
30A	Blower only including housing and wheel	**82111**, Lau #DD9-6AP			**43607**, Lau #DD9-9AP
30B	Blower Mounting Angle	**100888** (2)			
30C	Restrictor	**100891**	--	--	--
30D	Restrictor Mounting Angle	**100872** (3)	--	--	--
31	Blower Washer 3/4" x 1-1/2"	**1087** (4)			
32	Direct Drive Motors, 115 volt	**201760**, 1/6HP (replaces 100491)		**201761**, 1/3HP (replaces 100490)	
33	Capacitor	**101917**, 5MFD/370V (replaces 43614)		**101918**, 7.5MFD/370V (replaces 82095)	
33A	Capacitor End Cap	**82113** (Stone City #4522-07)			
33B	Capacitor Strap Bracket	**82114** (Stone City #1614)			
34	Washer 1-1/8" OD x 1/4" ID	**82450** (3)			
35	Screw #14x1-1/4" Slotted Hex	**82451** *(3)*			
36	Motor Band	**51221**			
37	Motor Support	**51223** (3)			

Blower Components - Models B and BE 50-400 with Belt-Driven Motor

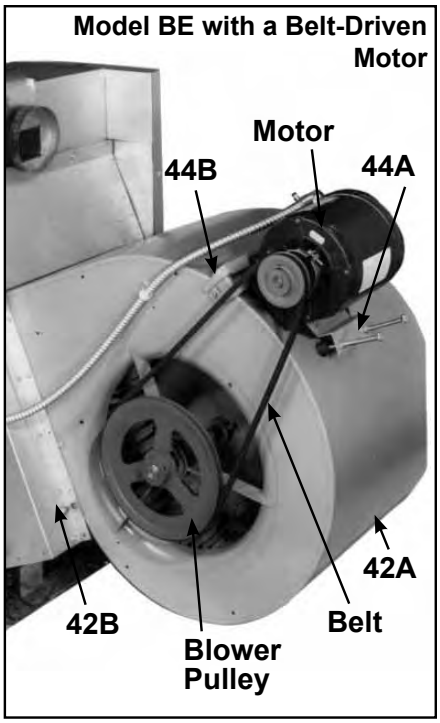

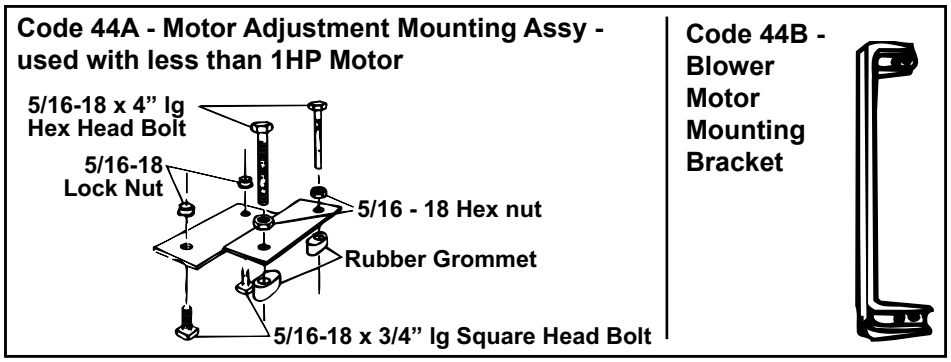

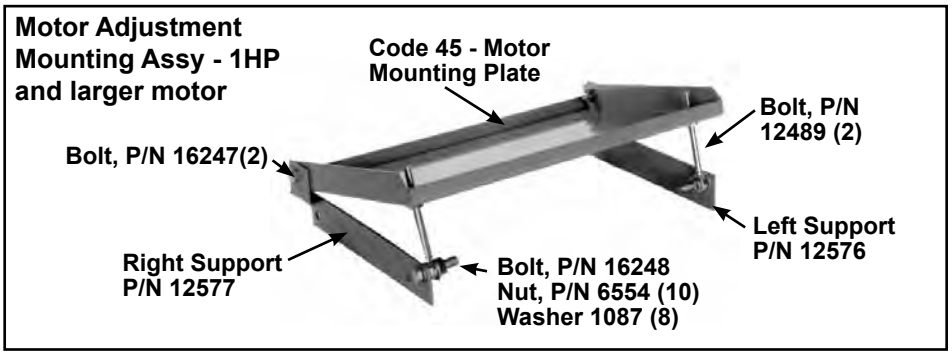

Code	Description	Size							
		50	75	100	125	130/165	200	250/300	400
42A	Blower (includes shaft & bearings)	**100655**, Lau #A9-6ACD		**100656**, Lau #A9-9A	**1357**, LAU #10AC-10AC	**100657**, Lau #A12-9ACD	**100658**, Lau #A15-11ACD		**100659**, Lau #A15-15ACD
42B	Blower Mounting Angle	**100888** (2)			**131800** (2)	**100889** (2)	**100890** (2)		
42C	Blower Bearings	**7310** (2)				**10437** (2)			
43	Blower Washer 3/4" x 1-1/2"	--	--	--	--	**1087** (4)			
44A	Mtr Adjustment Mounting Assy - 3/4HP or less	**44411**							
44B	Blower Mtr Mounting Bracket - 3/4HP or less	**102536**		**102537**	**44409**	**102533**	**102534**		**102535**
45	Blower Mtr Mounting Plate - 1 HP and larger (plate only, see illustration for additional parts)	--	--	--	--	**114545**	**14205**		**101422**
46	Key, 1/4" square x 1-1/4" long	**16099**							

Blower Motor Contactor

Code	Description	Sizes 50-300	Sizes 400
47A	Contactor, 115V, Hartland HCC-3XT01CY (Important Note: If replacing a Gould contactor, order complete contactor assembly including a new enclosure, **P/N 95527**)	**119626** (replaces 93662)	--
	Contactor, 230V, Hartland HCC-3XU01CY (Important Note: If replacing a Gould contactor, order complete contactor assembly including a new enclosure, **P/N 95528**)	**119627** (replaces 93663)	
	Contactor, 460V, 24V Coil, Hartland HCC-3XQ01CY (Important Note: If replacing a Gould contactor, order complete contactor assembly including a new enclosure, **P/N 95526**)	**216386** (replaces 93661 or 119625)	
47B	Contactor Enclosure	**93917**	
47C	Contactor Enclosure Cover	**120302**	

Blower Motor Contactor

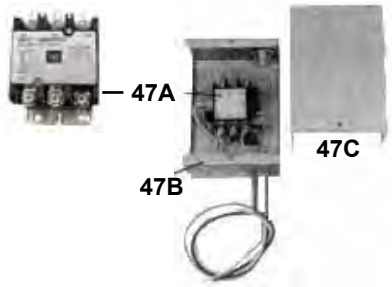

Belt-Driven Blower Motors and Motor Starters

Motors that do not list a contactor and overload have internal overload protection and are used with a contactor (**Code 47A**). Motors in the tables below with a contactor (starter) and overload listed do not have internal overload protection and must be used with the motor starter and overload. All motor starters must be ordered with a NEMA 1 enclosure, **P/N 151207**, GE#CLXE1A.

Motor							Service	Power	Efficiency	Contactor	P/N	Overload	o.l.	o.l.	P/N
Type	HP	fla	Model No.	P/N	volt	ph	Factor	Factor		GE #		GE #	min	max	
Open	1/3	6	BF2034	**202091**	120	1	1.35			-	-	-	-	-	-
	1/3	3	BF2034	**202091**	208	1	1.35	62.8	61.30%	-	-	-	-	-	-
	1/3	3	BF2034	**202091**	240	1	1.35	62.8	61.30%	-	-	-	-	-	-
	1/3	1.4	AOS-H260	**115863**	208	3	1.35			CL00A310T-L	**151150**	RTA1-G	1.00	1.50	**151187**
	1/3	1.6	AOS-H260	**115863**	240	3	1.35			CL00A310T-S	**151147**	RTA1-H	1.30	1.90	**151188**
	1/3	0.8	AOS-H260	**115863**	480	3	1.35			CL00A310T-U	**151148**	RTA1-F	0.65	1.10	**151186**
	1/2	8.8	BF2054	**102627**	120	1	1.15			-	-	-	-	-	-
	1/2	5.1	BF2054	**102627**	208	1	1.15			-	-	-	-	-	-
	1/2	4.4	BF2054	**102627**	240	1	1.15			-	-	-	-	-	-
	1/2	2.5	AOS-H880	**159183**	208	3	1.25			-	-	-	-	-	-
	1/2	3	AOS-H880	**159183**	240	3	1.25			-	-	-	-	-	-
	1/2	1.5	AOS-H880	**159183**	480	3	1.25			-	-	-	-	-	-
	1/2		AOS-H991	**202089**	575	3				Contact distributor or factory.					
	3/4	11	312P629	**93548**	120	1	1.25			-	-	-	-	-	-
	3/4	6.3	312P629	**93548**	208	1	1.25			-	-	-	-	-	-
	3/4	5.5	312P629	**93548**	240	1	1.25			-	-	-	-	-	-
	3/4	2.9	312P696	**36951**	208	3	1.25			-	-	-	-	-	-
	3/4	2.6	312P696	**36951**	240	3	1.25			-	-	-	-	-	-
	3/4	1.3	312P696	**36951**	480	3	1.25			-	-	-	-	-	-
	3/4		AOS-H992	**202090**	575	3				Contact distributor or factory.					
	1	13	C523	**13685**	120	1	1.25			-	-	-	-	-	-
	1	7.5	C523	**13685**	208	1	1.25			-	-	-	-	-	-
	1	6.5	C523	**13685**	240	1	1.25			-	-	-	-	-	-
	1	4	H882L	**36580**	208	3	1.15		79%	-	-	-	-	-	-
	1	3.7	H882L	**36580**	240	3	1.15		79%	-	-	-	-	-	-
	1	2	H882L	**36580**	480	3	1.15		79%	-	-	-	-	-	-
	1	1.4	AOS-H959	**158175**	575	3	1.15		82.50%	CL00A310T-Y	**151149**	RTA1-G	1.00	1.50	**151187**
	1.5	15	C621	**194202**	120	1	1.2	86.4	77.20%	-	-	-	-	-	-
	1.5	7.8	C621	**194202**	208	1	1.2	86.4	77.20%	-	-	-	-	-	-
	1.5	7.5	C621	**194202**	240	1	1.2	86.4	77.20%	-	-	-	-	-	-
	1.5	5.6	AOS-H884	**115859**	208	3	1.15	66.4	78.60%	-	-	-	-	-	-
	1.5	5	AOS-H884	**115859**	240	3	1.15	66.4	78.60%	-	-	-	-	-	-
	1.5	2.8	AOS-H884	**115859**	480	3	1.15	66.4	78.60%	-	-	-	-	-	-
	1.5	1.6	AOS-H960	**158162**	575	3	1.15	85.3	86.30%	CL00A310T-Y	**151149**	RTA1-H	1.30	1.90	**151188**
	2	10.2	V102	**202581**	240	1	1.15	81.8	77.50%	-	-	-	-	-	-
	2	7	AOS-H886	**159327**	208	3	1.15	67	79%	CL00A310T-L	**151150**	RTA1-M	5.50	8.50	**151192**
	2	6.6	AOS-H886	**159327**	240	3	1.15	67	79%	CL00A310T-S	**151147**	RTA1-L	4.00	6.30	**151191**
	2	3.5	AOS-H886	**159327**	480	3	1.15	67	79%	CL00A310T-U	**151148**	RTA1-K	2.50	4.10	**151190**
	2	2.1	AOS-H965V1	**158176**	575	3	1.15	86	84.80%	CL00A310T-Y	**151149**	RTA1-J	1.90	2.70	**151189**
	3	9	AOS-H845	**159185**	208	3	1.15			CL00A310T-L	**151150**	RTA1-M	5.50	8.50	**151192**
	3	8.6	AOS-H845	**159185**	240	3	1.15			CL00A310T-S	**151147**	RTA1-M	5.50	8.50	**151192**
	3	4.3	AOS-H845	**159185**	480	3	1.15			CL00A310T-1	**151275**	RTA1-K	2.50	4.10	**151190**
	3	3.6	AOS-H954	**120019**	575	3	1.15	80.3	83.80%	CL00A310T-Y	**151149**	RTA1-K	2.50	4.10	**151190**
	5	13.4	196033	**113371**	208	3	1.15	87.2	85%	CL01A310T-L	**151155**	RTA1-P	10.00	16.00	**151194**
	5	13.2	196033	**113371**	240	3	1.15	87.2	85%	CL01A310T-S	**151152**	RTA1-P	10.00	16.00	**151194**
	5	6.6	196033	**113371**	480	3	1.15	87.2	85%	CL00A310T-1	**151275**	RTA1-M	5.50	8.50	**151192**
	5	5.4	H956	**120020**	575	3	1.15	85.9	85.30%	CL00A310T-Y	**151149**	RTA1-L	4.00	6.30	**151191**
TEFC	1/3	4.6	Stock #906	**115861**	120	1	1	68.5	72.10%	-	-	-	-	-	-
	1/3	2.3	C151	**159501**	208	1	1	67.2	69.50%	-	-	-	-	-	-
	1/3	2.4	C151	**159501**	240	1	1	67.2	69.50%	-	-	-	-	-	-

Belt-Driven Blower Motors and Motor Starters (cont'd)

Motor							Service	Power	Efficiency	Contactor	P/N	Overload	o.l.	o.l.	P/N
Type	HP	fla	Model No.	P/N	volt	ph	Factor	Factor		GE #		GE #	min	max	
TEFC	1/3	1.2	H261	**105567**	208	3	1.15		79.50%	CL00A310T-L	**151150**	RTA1-G	1.00	1.50	**151187**
	1/3	1.2	H261	**105567**	240	3	1.15		79.50%	CL00A310T-S	**151**	RTA1-G	1.00	1.50	**151187**
	1/3	0.6	H261	**105567**	480	3	1.15		79.50%	CL00A310T-U	**151148**	RTA1-D	0.40	0.65	**151184**
	1/2	7.2	C613	**159184**	120	1	1.15			-	**-**	-	-	-	**-**
	1/2	3.5	C613	**159184**	208	1	1.15			-	**-**	-	-	-	**-**
	1/2	3.6	C613	**159184**	240	1	1.15			-	**-**	-	-	-	**-**
	1/2	2.3	H274	**16077**	208	3	1	59.5	74.80%	-	**-**	-	-	-	**-**
	1/2	2	H274	**16077**	240	3	1	59.5	74.80%	-	**-**	-	-	-	**-**
	1/2	1	H274	**16077**	480	3	1	59.5	74.80%	-	**-**	-	-	-	**-**
	1/2	0.7	H276	**105568**	575	3	1.15	76.4	77%	Contact distributor or factory.					
	3/4	11	F353	**115860**	120	1	1	66	65.70%	-	**-**	-	-	-	**-**
	3/4	5.4	F353	**115860**	208	1	1	66	65.70%	-	**-**	-	-	-	**-**
	3/4	5.5	F353	**115860**	240	1	1	66	65.70%	-	**-**	-	-	-	**-**
	3/4	2	H580	**20371**	208	3	1	73.5	81.10%	-	**-**	-	-	-	**-**
	3/4	2.2	H580	**20371**	240	3	1	73.5	81.10%	-	**-**	-	-	-	**-**
	3/4	1.1	H580	**20371**	480	3	1	73.5	81.10%	-	**-**	-	-	-	**-**
	3/4	0.8	H461	**105569**	575	3	1.15	78.3	82%	Contact distributor or factory.					
	1	12	159105	**174993**	120	1	1.15	74.3	70.60%	-	**-**	-	-	-	**-**
	1	6.2	159105	**174993**	208	1	1.15	74.3	70.60%	-	**-**	-	-	-	**-**
	1	6	159105	**174993**	240	1	1.15	74.3	70.60%	-	**-**	-	-	-	**-**
	1	3.3	WEG-00118ES3ED56	**271444**	208	3	1	74.4	80.20%	CL00A310T-L	**151150**	RTA1-K	2.50	4.10	**151190**
	1	3.4	WEG-00118ES3ED56	**271444**	240	3	1	74.4	80.20%	CL00A310T-S	**151147**	RTA1-K	2.50	4.10	**151190**
	1	1.7	WEG-00118ES3ED56	**271444**	480	3	1	74.4	80.20%	CL00A310T-U	**151148**	RTA1-H	1.30	1.90	**151188**
	1	1.4	H525	**105570**	575	3	1.15	71.6	80.40%	CL00A310T-J	**151146**	RTA1-G	1.00	1.50	**151187**
	1.5	16.4	311P402	**94347**	120	1				-	**-**	-	-	-	**-**
	1.5	9.5	311P402	**94347**	208	1				-	**-**	-	-	-	**-**
	1.5	8.2	311P402	**94347**	240	1				-	**-**	-	-	-	**-**
	1.5	4.3	WEG-00158ES3ED56	**271445**	208	3	1	80.9	82.40%	CL00A310T-L	**151150**	RTA1-L	4.00	6.30	**151191**
	1.5	4.4	WEG-00158ES3ED56	**271445**	240	3	1	80.9	82.40%	CL00A310T-S	**151147**	RTA1-L	4.00	6.30	**151191**
	1.5	2.2	WEG-00158ES3ED56	**271445**	480	3	1	80.9	82.40%	CL00A310T-U	**151148**	RTA1-J	1.90	2.70	**151189**
	1.5	1.7	AOS T59027	**105665**	575	3	1.15	85.7	84%	CL00A310T-J	**151146**	RTA1-H	1.30	1.90	**151188**
	2	12	K200	**105572**	240	1	1	76.4	75.70%	CL01A310T-S	**151152**	RTA1-P	10.00	16.00	**151194**
	2	6.1	WEST NP0024	**158165**	208	3	1.15	77.5	84%	CL00A310T-L	**151150**	RTA1-M	5.50	8.50	**151192**
	2	5.6	WEST NP0024	**158165**	240	3	1.15	77.5	84%	CL00A310T-S	**151147**	RTA1-L	4.00	6.30	**151191**
	2	2.8	WEST NP0024	**158165**	480	3	1.15	77.5	84%	CL00A310T-1	**151275**	RTA1-K	2.50	4.10	**151190**
	2	2.2	AOS T59028	**158166**	575	3	1.15	77.5	84%	CL00A310T-J	**151146**	RTA1-J	1.90	2.70	**151189**
	3	7.7	BALDOR EM3559T	**159330**	208	3	1.15		85.50%	CL00A310T-L	**151150**	RTA1-M	5.50	8.50	**151192**
	3	7	BALDOR EM3559T	**159330**	240	3	1.15		85.50%	CL00A310T-S	**151147**	RTA1-M	5.50	8.50	**151192**
	3	3.5	BALDOR EM3559T	**159330**	480	3	1.15		85.50%	CL00A310T-1	**151275**	RTA1-K	2.50	4.10	**151190**
	3	3	B-M3559T-5	**111571**	575	3	1.15		85.50%	CL00A310T-J	**151146**	RTA1-K	2.50	4.10	**151190**

Belt Drive Components

NOTE: Pulleys require keyseats, see **Code 46**, page 8.

Key to AK Nos.			
Option AK	Voltage	Option AK	Voltage
1	115/1	6	230/3
2	208/1	7	460/3
3	230/1	8	575/3
5	208/3		

Key to AM Nos.			
Option AM	RPM Range	Option AM	RPM Range
2	451-500	8	751-800
3	501-550	9	801-850
4	551-600	10	851-900
5	601-650	11	901-950
6	651-700	12	951-1000
7	701-750		

Open Motor		Voltage AK Opt	Drive AM Option	Motor Pulley			Blower Pulley			Belt Type & Average Length*
HP	AL Opt	(See Key, above.)	(See Key, above.)	P/N	Model	Bore	P/N	Model	Bore	
1/4, 1/3	2, 3	AK1, AK2, AK3, AK5, AK6, AK7	1, 2	**4074**	1VL34	1/2	**111609**	AK 99	1	"A-section" 3.8 ft
			3, 4	**13491**	1VL40	1/2	**111609**	AK 99	1	"A-section" 3.8 ft
			5, 6, 7	**13491**	1VL40	1/2	**19111**	AK 84	1	"A-section" 3.8 ft
			8, 9, 10, 11, 12	**13491**	1VL40	1/2	**18797**	AK 64	1	"A-section" 3.8 ft
			13, 14, 15, 16, 17	**13491**	1VL40	1/2	**135200**	AK 51	1	"A-section" 3.8 ft
1/2, 3/4, 1, 1-1/2	4, 5, 6, 7	AK1, AK2, AK3, AK5, AK6, AK7	1, 2	**13580**	1VL34	5/8	**111609**	AK 99	1	"A-section" 3.8 ft
			3, 4	**7962**	1VL40	5/8	**111609**	AK 99	1	"A-section" 3.8 ft
			5, 6, 7	**7962**	1VL40	5/8	**19111**	AK 84	1	"A-section" 3.8 ft

Open Motor (cont'd)		Voltage AK Opt	Drive AM Option	Motor Pulley			Blower Pulley			Belt Type & Average Length*
HP	AL Opt	(See Key, page 10.)	(See Key, page 10.)	**P/N**	Model	Bore	**P/N**	Model	Bore	
1/2, 3/4, 1, 1 1/2	4, 5, 6, 7	AK1, AK2, AK3, AK5, AK6, AK7	8, 9, 10, 11, 12	**7962**	1VL40	5/8	**18797**	AK 64	1	"A-section" 3.8 ft
			13, 14, 15, 16, 17	**7962**	1VL40	5/8	**135200**	AK 51	1	"A-section" 3.8 ft
1/2, 3/4	4, 5	AK8	1, 2	**13580**	1VL34	5/8	**111609**	AK 99	1	"A-section" 3.8 ft
			3, 4	**7962**	1VL40	5/8	**111609**	AK 99	1	"A-section" 3.8 ft
			5, 6, 7	**7962**	1VL40	5/8	**19111**	AK 84	1	"A-section" 3.8 ft
			8, 9, 10, 11, 12	**7962**	1VL40	5/8	**18797**	AK 64	1	"A-section" 3.8 ft
			13, 14, 15, 16, 17	**7962**	1VL40	5/8	**135200**	AK 51	1	"A-section" 3.8 ft
1, 1-1/2	6, 7	AK8	1, 2	**110125**	1VP34	7/8	**111609**	AK 99	1	"A-section" 3.8 ft
			3, 4	**106748**	1VL40	7/8	**111609**	AK 99	1	"A-section" 3.8 ft
			5, 6, 7	**106748**	1VL40	7/8	**19111**	AK 84	1	"A-section" 3.8 ft
			8, 9, 10, 11, 12	**106748**	1VL40	7/8	**18797**	AK 64	1	"A-section" 3.8 ft
			13, 14, 15, 16, 17	**106748**	1VL40	7/8	**135200**	AK 51	1	"A-section" 3.8 ft
2	8	AK1, AK2, AK3	1, 2	**13580**	1VL34	5/8	**111609**	AK 99	1	"A-section" 3.8 ft
			3, 4	**7962**	1VL40	5/8	**111609**	AK 99	1	"A-section" 3.8 ft
			5, 6, 7	**7962**	1VL40	5/8	**19111**	AK 84	1	"A-section" 3.8 ft
			8, 9, 10, 11, 12	**7962**	1VL40	5/8	**18797**	AK 64	1	"A-section" 3.8 ft
			13, 14, 15, 16, 17	**7962**	1VL40	5/8	**135200**	AK 51	1	"A-section" 3.8 ft
		AK5, AK6, AK7, AK8	1, 2	**110125**	1VP34	7/8	**111609**	AK 99	1	"A-section" 3.8 ft
			3, 4	**106748**	1VL40	7/8	**111609**	AK 99	1	"A-section" 3.8 ft
			5, 6, 7	**106748**	1VL40	7/8	**19111**	AK 84	1	"A-section" 3.8 ft
			8, 9, 10, 11, 12	**106748**	1VL40	7/8	**18797**	AK 64	1	"A-section" 3.8 ft
			13, 14, 15, 16, 17	**106748**	1VL40	7/8	**135200**	AK 51	1	"A-section" 3.8 ft
3	9	AK2, AK3	9, 10, 11, 12	**7962**	1VL40	5/8	**202652**	AK124	1	"A-section" 3.8 ft
			13, 14, 15, 16, 17	**7962**	1VL40	5/8	**202653**	AK94	1	"A-section" 3.8 ft
3, 5	9, 10	AK5, AK6, AK7, AK8	9, 10, 11, 12	**106748**	1VL40	7/8	**101414**	BK130	1	"B-section" 3.8 ft
			13, 14, 15, 16, 17	**106748**	1VL40	7/8	**202654**	BK105	1	"B-section" 3.8 ft

* Assume 17 Fenner belt links per foot. One "A" belt link is P/N 201809. "B" link is P/N 202655.

TEFC Motor		Voltage AK Opt	Drive AM Option	Motor Pulley			Blower Pulley			Belt Type & Average Length*
HP	AL Opt	(See Key, page 10.)	(See Key, page 10.)	**P/N**	Model	Bore	**P/N**	Model	Bore	
1/4	19	AK1	1, 2	**4074**	1VL34	1/2	**111609**	AK 99	1	"A-section" 3.8 ft
			3, 4	**13491**	1VL40	1/2	**111609**	AK 99	1	"A-section" 3.8 ft
			5, 6, 7	**13491**	1VL40	1/2	**19111**	AK 84	1	"A-section" 3.8 ft
			8, 9, 10, 11, 12	**13491**	1VL40	1/2	**18797**	AK 64	1	"A-section" 3.8 ft
			13, 14, 15, 16, 17	**13491**	1VL40	1/2	**135200**	AK 51	1	"A-section" 3.8 ft
		AK2, AK3, AK5, AK6, AK7	1, 2	**13580**	1VL34	5/8	**111609**	AK 99	1	"A-section" 3.8 ft
			3, 4	**7962**	1VL40	5/8	**111609**	AK 99	1	"A-section" 3.8 ft
			5, 6, 7	**7962**	1VL40	5/8	**19111**	AK 84	1	"A-section" 3.8 ft
			8, 9, 10, 11, 12	**7962**	1VL40	5/8	**18797**	AK 64	1	"A-section" 3.8 ft
			13, 14, 15, 16, 17	**7962**	1VL40	5/8	**135200**	AK 51	1	"A-section" 3.8 ft
1/3	20	AK1, AK2, AK3, AK5, AK6, AK7	1, 2	**4074**	1VL34	1/2	**111609**	AK 99	1	"A-section" 3.8 ft
			3, 4	**13491**	1VL40	1/2	**111609**	AK 99	1	"A-section" 3.8 ft
			5, 6, 7	**13491**	1VL40	1/2	**19111**	AK 84	1	"A-section" 3.8 ft
			8, 9, 10, 11, 12	**13491**	1VL40	1/2	**18797**	AK 64	1	"A-section" 3.8 ft
			13, 14, 15, 16, 17	**13491**	1VL40	1/2	**135200**	AK 51	1	"A-section" 3.8 ft
1/2, 3/4, 1	21, 22, 23	AK1, AK2, AK3, AK5, AK6, AK7, AK8	1, 2	**13580**	1VL34	5/8	**111609**	AK 99	1	"A-section" 3.8 ft
			3, 4	**7962**	1VL40	5/8	**111609**	AK 99	1	"A-section" 3.8 ft
			5, 6, 7	**7962**	1VL40	5/8	**19111**	AK 84	1	"A-section" 3.8 ft
			8, 9, 10, 11, 12	**7962**	1VL40	5/8	**18797**	AK 64	1	"A-section" 3.8 ft
			13, 14, 15, 16, 17	**7962**	1VL40	5/8	**135200**	AK 51	1	"A-section" 3.8 ft
1-1/2	24	AK1, AK2, AK3, AK5, AK6, AK7	1, 2	**13580**	1VL34	5/8	**111609**	AK 99	1	"A-section" 3.8 ft
			3, 4	**7962**	1VL40	5/8	**111609**	AK 99	1	"A-section" 3.8 ft
			5, 6, 7	**7962**	1VL40	5/8	**19111**	AK 84	1	"A-section" 3.8 ft
			8, 9, 10, 11, 12	**7962**	1VL40	5/8	**18797**	AK 64	1	"A-section" 3.8 ft
			13, 14, 15, 16, 17	**7962**	1VL40	5/8	**135200**	AK 51	1	"A-section" 3.8 ft
		AK8	1, 2	**110125**	1VP34	7/8	**111609**	AK 99	1	"A-section" 3.8 ft
			3, 4	**106748**	1VL40	7/8	**111609**	AK 99	1	"A-section" 3.8 ft
			5, 6, 7	**106748**	1VL40	7/8	**19111**	AK 84	1	"A-section" 3.8 ft
			8, 9, 10, 11, 12	**106748**	1VL40	7/8	**18797**	AK 64	1	"A-section" 3.8 ft
			13, 14, 15, 16, 17	**106748**	1VL40	7/8	**135200**	AK 51	1	"A-section" 3.8 ft
2	25	AK5, AK6, AK7, AK8	1, 2	**110125**	1VP34	7/8	**111609**	AK 99	1	"A-section" 3.8 ft
			3, 4	**106748**	1VL40	7/8	**111609**	AK 99	1	"A-section" 3.8 ft
			5, 6, 7	**106748**	1VL40	7/8	**19111**	AK 84	1	"A-section" 3.8 ft
			8, 9, 10, 11, 12	**106748**	1VL40	7/8	**18797**	AK 64	1	"A-section" 3.8 ft
			13, 14, 15, 16, 17	**106748**	1VL40	7/8	**135200**	AK 51	1	"A-section" 3.8 ft
3	26	AK5, AK6, AK7, AK8	9, 10, 11, 12	**106748**	1VL40	7/8	**101414**	BK130	1	"B-section" 3.8 ft
			13, 14, 15, 16, 17	**106748**	1VL40	7/8	**202654**	BK105	1	"B-section" 3.8 ft

* Assume 17 Fenner belt links per foot. One "A" belt link is **P/N 201809**. One "B" link is **P/N 202655**.

Burner Rack and Components

Code	Description	Size										
		25	50	75	100	125	130	165	200	250	300	400
50	Burner Rack Assembly - Aluminized (includes burners and flash carryover; less pilot; less manifold & orifices; and less valve)	98983	98984	98985	98986	132753	98987	98988	98989	98990	98991	98992
	Burner Rack Assembly - Stainless Steel (includes burners and flash carryover; less pilot; less manifold & orifices; and less valve)	98993	98994	98995	98996	132755	98997	98998	98999	99000	99001	99002
50A	Burner only - Aluminized (qty of burners per Size in parenthesis)	94777					94781					
		(2)	(3)	(4)	(5)	(6)	(4)	(5)	(6)	(8)	(9)	(12)
	Burner only - Stainless Steel (qty of burners per Size in parenthesis)	97345					97348					
		(2)	(3)	(4)	(5)	(6)	(4)	(5)	(6)	(8)	(9)	(12)
51	Carryover Assembly	96769	47690	63128	96042	96044	96043	96042	96044	--	--	--
51A	Right Carryover Assembly	--	--	--	--	--	--	--	--	96045	96046	96045
51B	Left Carryover Assembly	--	--	--	--	--	--	--	--	96047	96047	96047
51C	Center Carryover Assembly	--	--	--	--	--	--	--	--	--	--	63156
52	Burner Rack Support	**113936** (See illustration Code 111, page 16.)								**113937**		
53	Manifold only, less orifices, less valve	95434	95435	95436	95437	95440	95436	95437	95440	95441	95442	95443
54	Manifold with Natural Gas Burner Orifices for sea level* operation (less valve)	99003	99004	99005	99006	132749	99007	99008	99009	99010	99011	99012
	Manifold with Propane Gas Burner Orifices for sea level* operation (less valve)	99013	99014	99015	99016	132751	99017	99018	99019	99020	99021	99022
55	Burner Orifices	See chart on page 13.										
56	Pilot Shield (FE and BE Models and F and B Models with optional spark pilot)	97204										
57	Air Shutter Assembly (Same as Option ED1)	98476	98477	98478	98479	98480	98478	98479	98480	98481	98482	98483
58	Shut-off Valve with Union (Same as CE Option)	**196910** - 1/2"										
		--	--	--	--	--	--	--	--	--	**196911** - 3/4"	

* A manifold with "sea level" orifices also applies if the manifold pressure has been adjusted in the field for high altitude operation (check for manifold adjustment label). If the heater was factory equipped for high altitude operation (Option AB), select high altitude orifices separately from the chart on page 13. Check the heater rating plate to identify the elevation at which the heater was manufactured to operate.

Code 50 - Burner Rack Assembly (Less pilot, manifold, orifices, and valve)

Code 50A - Burner Only

Code 51 - Carryover Assembly

Code 53 - Manifold (less orifices)

Code 54 - Manifold with Orifices
Code 55 - Burner Orifices

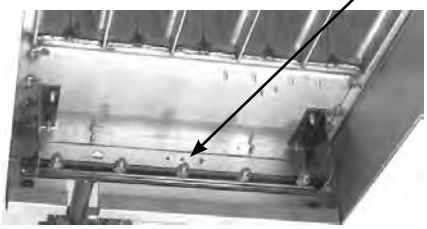

Code 56 - Pilot Shield

Code 57 - Air Shutter Assembly

Code 58 - Shutoff Valve with Union

1/2" Valve with Union, P/N 196910

3/4" Valve with Union, P/N 196911

Code 55 - Burner Orifices

Description	Size										
	25	50	75	100	125	130	165	200	250	300	400
Burner Orifices (quantity in parenthesis)	Use extreme care in selecting replacement burner orifices										
	(2)	(3)	(4)	(5)	(6)	(4)	(5)	(6)	(8)	(9)	(12)
Natural Gas Orifices for a unit with a rating plate indicating sea level operation (0-2000 ft) even if the manifold pressure has been adjusted for high altitude - U.S.A. & Canada	**39650**	**84853**	**38678**	**11833**		**11831**					
	#51	#47	#45	#44	#44	#35	#35	#35	#35	#35	#35
Propane Orifices for a unit with rating plate indicating sea level operation (0-2000 ft) even if the manifold pressure has been adjusted for high altitude operation - U.S.A. & Canada	**95936**	**63003**	**64676**	**11830**		**96344**					
	#60	#1.2MM	#1.3MM	#55	#55	#1.65MM	#1.65MM	#1.65MM	#1.65MM	#1.65MM	#1.65MM
Orifices for factory-equipped (Option AB) high altitude (check the rating plate)											
2001-4500 ft, Natural Gas - Canada	**51284**	**39651**	**84853**	**38678**		**11835**					
	#52	#49	#47	#45	#45	#37	#37	#37	#37	#37	#37
2001-4500 ft, Propane - Canada	**97534**	**63922**	**97359**	**11830**		**61653**					
	#62	#1.15MM	#1.25MM	#55	#55	#1.55MM	#1.55MM	#1.55MM	#1.55MM	#1.55MM	#1.55MM
2001-3000 ft, Natural Gas - U.S.A.	**39650**	**40414**	**16590**	**38678**		**97362**					
	#51	#48	#46	#45	#45	#36	#36	#36	#36	#36	#36
2001-3000 ft, Propane - U.S.A.	**97355**	**39658**	**97359**	**11830**		**51284**					
	#61	#56	#1.25MM	#55	#55	#52	#52	#52	#52	#52	#52
3001-4000 ft, Natural Gas - U.S.A.	**51284**	**40414**	**84853**	**38678**		**97362**					
	#52	#48	#47	#45	#45	#36	#36	#36	#36	#36	#36
3001-4000 ft, Propane - U.S.A.	**97355**	**63922**	**97359**	**11830**		**61653**					
	#61	#1.15MM	#1.25MM	#55	#55	#1.55MM	#1.55MM	#1.55MM	#1.55MM	#1.55MM	#1.55MM
NOTE: All power vented models over 4000 ft also require high altitude venter pressure switch; see Code 75, page 14.											
4001-5000 ft, Natural Gas - U.S.A.	**51284**	**39651**	**84853**	**38678**		**11835**					
	#52	#49	#47	#45	#45	#37	#37	#37	#37	#37	#37
4001-5000 ft, Propane - U.S.A.	**97354**	**63922**	**97359**	**11830**		**61653**					
	#62	#1.15MM	#1.25MM	#55	#55	#1.55MM	#1.55MM	#1.55MM	#1.55MM	#1.55MM	#1.55MM
5001-6000 ft, Natural Gas - U.S.A.	**51284**	**39651**	**84853**	**16590**		**11835**					
	#52	#49	#47	#46	#46	#37	#37	#37	#37	#37	#37
5001-6000 ft, Propane - U.S.A.	**40415**	**63922**	**63003**	**39658**		**9789**					
	#63	#1.15MM	#1.2MM	#56	#56	#53	#53	#53	#53	#53	#53
6001-7000 ft, Natural Gas - U.S.A.	**51284**	**39651**	**40414**	**84853**		**45870**					
	#52	#49	#48	#47	#47	#38	#38	#38	#38	#38	#38
6001-7000 ft, Propane - U.S.A.	**40415**	**40416**	**63003**	**39658**		**9789**					
	#63	#57	#1.2MM	#56	#56	#53	#53	#53	#53	#53	#53
7001-8000 ft, Natural Gas - U.S.A.	**9789**	**39652**	**40414**	**84853**		**45871**					
	#53	#50	#48	#47	#47	#39	#39	#39	#39	#39	#39
7001-8000 ft, Propane - U.S.A.	**97352**	**40416**	**63922**	**39658**		**9789**					
	#64	#57	#1.15MM	#56	#56	#53	#53	#53	#53	#53	#53
8001-9000 ft, Natural Gas - U.S.A.	**9789**	**39652**	**39651**	**40414**		**87391**					
	#53	#50	#49	#48	#48	#40	#40	#40	#40	#40	#40
8001-9000 ft, Propane - U.S.A.	**97352**	**40416**	**63922**	**39658**		**61652**					
	#64	#57	#1.15MM	#56	#56	#1.45MM	#1.45MM	#1.45MM	#1.45MM	#1.45MM	#1.45MM

60 - Match-Lit Pilot

P/N 110851 - *Complete* replacement pilot for natural gas, match lit pilot (includes Code 60 for natural gas and Code 61)

P/N 110852 - *Complete* replacement pilot for propane gas, match lit pilot (includes Code 60 for propane and Code 61)

62 - Spark Pilot

P/N 110853 - *Complete* replacement pilot kit for natural gas, spark pilot (includes Code 62 for natural gas, Code 63, and Code 64)

P/N 110854 - *Complete* replacement pilot kit for propane gas, spark pilot (includes Code 62 for propane gas, Code 63, and Code 64)

Code	P/N	Component Description
60	96360	Pilot Assembly, Natural Gas, with orifice, pilot tubing, thermocouple, and one compression fitting - Johnson #J994HKA-9731-715
	96361	Pilot Assembly, Propane Gas, with orifice, pilot tubing, thermocouple, and one compression fitting - Johnson #J994HKA-9733-410
60A	103034	Orifice only, Natural Gas, Johnson #9731-715 (brass)
	98695	Orifice only, Propane Gas, Johnson #9733-410 (black)
60B	98698	Pilot Tubing, Johnson #B10499-995-11, 1/8" ODx18"lg
61	97572	Compression Fitting, #FTG75
60C	84761	Thermocouple, 24", #K15FA-24D

NOTE: Match-Lit Pilots were used on Model F and B units with heater serial number safety pilot Code 31 (See page 2). (Match-lit pilots were discontinued on heaters manufactured beginning 8/2008.

Code	P/N	Component Description
62	97534	Pilot Assembly, Natural Gas, with orifice, pilot tubing, flame rod, and one compression fitting (does not include flame sensor lead) - Johnson #J982HKW-9731-715
	97535	Pilot Assembly, Propane Gas, with orifice, pilot tubing, flame rod, and one compression fitting (does not include flame sensor lead) - Johnson #J982HKW-9733-410
62A	103034	Orifice only, Natural Gas, Johnson #9731-715 (brass)
	98695	Orifice only, Propane Gas, Johnson #9733-410 (black)
62B	98698	Pilot Tubing, Johnson #B10499-995-11, 1/8" ODx18" lg
63	97572	Compression Fitting, #FTG75
62C	98697	Flame Rod, Johnson #Y75AA-3
64	97575	Flame Sensor Lead, 21" (not illustrated)

NOTE: Spark Pilots are used on Model FE & BE units and Model F & B units with heater serial number safety pilot Codes 65, 66, 94, 95 (page 2).

Venters - Models FE and BE

Code	Description			Size						
				25/50/75	100	125	130	165/200/250	300	400
70	Venter Housing, DeStaco			98172		131985	98173	101052	98175	
				#250C with 4" Collar		#250C w/5" Collar	#350C w/4" Collar	#350C w/5" Collar	#350C w/6" Collar	
						(Order Venter Gasket, Code 71, with housing for Sizes 125-400)				
71	Venter Gasket			--	--	**97300** (must be ordered when replacing Code 70 on Sizes 125-400)				
72	Venter Motor and Wheel Assembly by supply voltage (less pressure switch and tubing)	115/1	FE	97727		131986	194687			
			BE	97727		131986	194687			--
		208/1	FE/BE	--	--	133244	98369			
		230/1	FE	--	116102	133244	98369			
			BE	--	--	--	98369			
		208/3	BE	--	--	--	98369	98369	98369	98369
		230/3	BE	--	--	--	98369	98369	98369	98369
		460/3	BE	--	--	--	116280	116280	116280	116280
		575/3	BE	--	--	--	194687			
72A	Venter Motor Only (by supply voltage)	115/1	FE	148055 (replaces 97738)			214067 (replaces 148053, 97741 & 165700)			
			BE	148055 (replaces 97738)			214067 (replaces 97741, 148053 & 165700)			--
		208/1	FE/BE	--	--	148054 (replaces 98157)				
		230/1	FE	--	148054 (replaces 98157)					
			BE	--	--	148054 (replaces 98157)				
		208/3	BE	--	--	148054 (replaces 98157)				
		230/3	BE	--	--	148054 (replaces 98157)				
		460/3	BE	--	--	115802				
		575/3	BE	--	--	148053 (replaces 97741)				
72B	Venter Wheel Only			97725		131987	97724			
72C	Motor Plate (not illustrated)			68007			93701			
72D	Venter Fan Blade, 2-1/2"			68005						

Venter Assembly

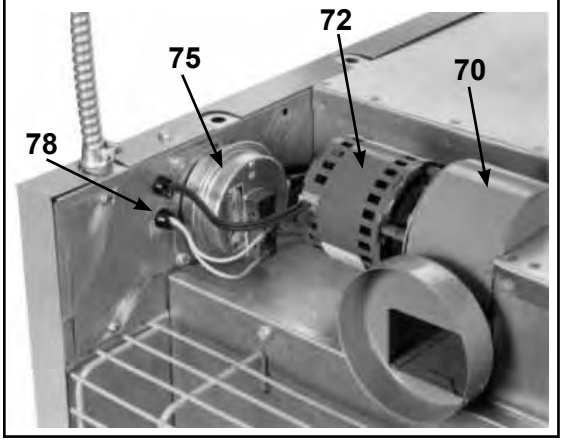

Code 71 - Venter Gasket, P/N 97300

Code 72 - Venter Motor and Wheel Assembly

Code 72D - Venter Fan Blade, P/N 68005

Code 73 - Capacitor, P/N 163894

Code 76 - Sensing Tube Assembly

Used on heaters mfgd prior to 1/94.

Used on heaters mfgd beginning 1/94.

Code 80 - Vent Cap

Code 77 - Silicone Tubing - Two pieces required on heaters manufactured prior to 1/94; one piece required on heaters manufactured beginning 1/94.

Code 79 - RBM Relay, P/N 18549

Code	Description	Size					
		25/50/75/100	125	130	165/200	250	300/400
73	Capacitor	--	**163894** (replaces 87435 and 103181)				
74	Capacitor Boot	--	--	--	**103182**		
75	Pressure Switch Replacement Kit (for heaters mfgd prior to 1/94)	**196653 -** for sea level to 4000 ft elevation for Model FE/BE htrs mfgd prior to 1/94 (Date Code ATA)					
		196654 - for above 4000 ft elevation for Model FE/BE htrs mfgd prior to 1/94 (Date Code ATA)					
	Pressure Switch (for heaters mfgd beginning 1/94 (Date Code ATA)	**195316 -** for sea level to 4000 ft elevation for Model FE/BE htrs mfgd beginning 1/94 (Date Code ATA)					
		195317 - for above 4000 ft elevation for Model FE/BE heaters mfgd beginning 1/94 (Date Code ATA)					
76	Sensing Tube Assy heaters mfgd prior to 1/94	**97210**	--	**97208**			
	Sensing Tube Assy heaters mfgd beginning 1/94	**129859**		**129860**			
77	Silicone Rubber Tubing heaters mfgd prior to 1/94	(1)**123571 - 9-3/4"**	--	(2) **98221** - 3-1/2"		(1) **98221** - 3-1/2"	
		(1)**123572 - 10-1/2"**	--			*(1)***113774** - 4"	
	Silicone Rubber Tubing heaters mfgd beginning 1/94	(1)**130388** - 10"		(1)**130389** - 3"		(1)**131795** - 3-1/4"	
78	Strain Relief, Heyco #SR-5KN-5	**98393**					
79	RBM Relay (WR 90-370)	**18549** (To replace relay P/N 98118, order Replacement Kit **P/N 263527**.)					
80	Vent Cap - FE and BE	**111848** - 4"	**111849** - 5"	**111848** - 4"	**111849** - 5"		**111850** - 6"
81	Flue Exhaust Tape (not illustrated)	**98266,** Aluminum Tape, 550°F, 1" x 10 yds (Same as Option FA1)					

Optional Power Venter for Gravity-Vent Units - Models F and B

Code	Description		Size							
			25/50	75/100	125	130	165	200	250/300	400
90 - Power Venter Kits	115 volt Venter, Venter Adapter, & Parts Bag (Same as Option CA1 - includes two hanger bracket assemblies for converting fan units to 4-pt suspension.)		**98467**		**136862**	**98468**			**98471**	
	208 volt Venter, Venter Adapter, & Parts Bag (Same as Option CA2 - includes two hanger bracket assemblies for converting fan units to 4-pt suspension.)		--	--	**135441**	**98469**			**98472**	
	230 volt Venter, Venter Adapter, & Parts Bag (Same as Option CA3 - includes two hanger bracket assemblies for converting fan units to 4-pt suspension.)		--	--	**135442**	**98470**			**98473**	
Replacement Component Parts for Optional Power Venters										
91	Venter Assy including Blower and Motor and Wheel Assy (includes 92, 93, 94, 96)	115 volt	**97976**						**97955**	
		208 volt	--	--	--	**97977**			**97956**	
		230 volt	--	--	--	**97978**			**97957**	
92	Blower Housing Assembly		**268644** (replaces 6631)						**268645** (replaces 10529)	
93	Venter Motor and Wheel Assembly	115 volt	**97980**						**97958**	
		208 volt	--	--	**97981**				**97959**	
		230 volt	--	--	**97982**				**97960**	
93A	Venter Motor only	115 volt	**61069**						**87434**	
		208 volt	--	--	**30249**					
		230 volt	--	--	**29571**					
93B	Wheel, Torrington		**29791**						**29792**	
93C	Fan Blade, 3", RHG-0.3125 bore		**29793**							
94A	Capacitor		--	--	--	--	--	--	**163894** (replaces 103181)	
94B	Capacitor Boot, Sysntex #147-78		--	--	--	--	--	--	**103182**	
95	Time Delay Relay, **P/N 259518**, replacement for venter kits manufactured beginning 2/2010. For kits manufactured before 2/2010, order time delay replacement kit, **P/N 259521.** (Venters requiring this kit will have a TI #6000060-17 time delay relay.)									
96	Pressure Switch		**207178** (replaces 97907 & 97908)							
97	Venter Adapter Assembly		**97823**		**146094**	**97824**			**97825**	
98	Parts Bag for installing all Option CA Power Venters		**97966,** (See component list below.)							
98A	Flue Restrictor (not illustrated, included in Code 90)		**98665** 2-3/4x6	**98664** 2x6	**97943** 1x7	**97944** 1-1/2x7-3/4	**97943** 1x7	None	**97944** 1-1/2x 7-3/4	None
99	Conduit Connector, Tinnerman #C54882-017		(2) **97941**							
100	Flexible Conduit, 5/16" x 24"		(2) **17950**							
101	Vent Cap for Model F or B with optional power vent. Vent cap is not included in Code 90 kit. (Illustration is same as Code 80, page 14.)		**111848** - 4"						1**11850** - 6"	
102	Flue Exhaust Tape (not included in Code 90 kit)		**98266**, Aluminum tape 550°F, 1" x 10 yds (not illustrated)							

Code 90 - Power Venter Kit (Parts Bag Not Illustrated - See Code 98)

91 - Venter Assy

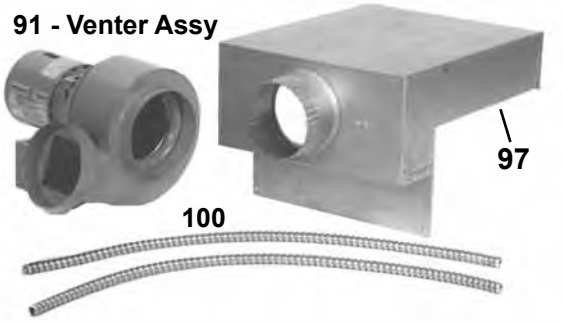

Code 93B - Venter Wheel

Code 93C - Venter Fan Blade

Code 94A - Capacitor, P/N 163894

Code 96 - Pressure Switch

Code 98 Parts Bag -

Parts Bag, **P/N 97966**, is standardized for all sizes of power venters. It contains all of the items required for any installation and may include parts that are not used. The highlighted descriptions in **bold type** should always be used. Each parts bag includes:

Qty	P/N	Description
2	**96386**	Hanger Assembly
1	**98364**	**Brown Wire Assembly**
2	**103342**	**Black Wire Assembly**
2	**97941**	**Conduit Connector, Tinnerman #C54882-017**
13	**16354**	**Twist-on Wire Connector, Ideal #3-0273**
2	**38529**	**Sheetmetal Screws, #8-15 x 1/2"**
11	**11813**	**Sheetmetal Screws, #10 x 1/2"**
1	**16199**	**Box Connector**
1	**1417**	**90° Box Connector**
2	**16358**	**Anti-Short Bushing (red)**
1	**91453**	**Orange Wire, 18 Gauge x 60", 105°C**
1	**38463**	**Yellow Wire, 18 Gauge x 60", 105°C**
1	**38464**	**Brown Wire, 18 Gauge x 60", 105°C**
1	**3841**	**Black Wire, 18 Gauge x 36", 105°C**
1	**87880**	**White Wire, 18 Gauge x 36", 105°C**
1	**38462**	**Blue Wire 18 Gauge x 60", 105°C**
2	**148086**	**Open/Closed Bushing, Heyco #OCB625**
1	**97843**	Restrictor, 1" Wide
1	**97944**	Restrictor, 1-1/2" Wide
1	**98664**	Restrictor, 2" Wide
1	**99665**	Restrictor, 2-3/4" Wide
2	**16355**	Wire Nuts (used for field connection on blower models)
1	**103171**	**Warning Label**

Code 99 - Conduit Connector

Code 100 - Flexible Conduit

Heat Exchangers

A gasket kit is included with replacement heat exchangers for Model B and BE heaters. If a new burner rack support is required, order P/N listed. Burner rack supports manufactured prior to 8/91 (Serial No. Date Code AQH) were not indexed.

Code	Description			Size										
				25	50	75	100	125	130	165	200	250	300	400
110	Heat Exchanger Assembly	Aluminized	F/FE	102282	102283	102284	102285	132743	102286	102287	102288	102289	102290	102291
			B/BE	173823	173824	173825	173826	173827	173828	173829	173830	173831	173832	173833
		409 Stainless	F/FE	102311	102312	102313	102314	132745	102315	102316	102317	102318	102319	102320
			B/BE	173834	173835	173836	173837	173838	173839	173840	173841	173842	173843	173844
110A	Gasket Kit included in Replacement Heat Exchangers for blower models. Kit includes five self-adhesive gasket strips, a tube of sealant and instructions.			102280					102281					
111	Indexed Burner Rack Support			113936								113937		

Code 110 - Heat Exchanger

Code 111 - Burner Rack Supports

P/N 113937 - Burner Rack Support for Sizes 250-400

(Same as Code 52 on page 12)

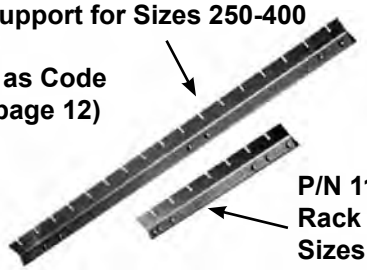

P/N 113936, Burner Rack Support for Sizes 25-200

Cabinet Parts

Code	Description		Size										
			25	50	75	100	125	130	165	200	250	300	400
120	Top Front		94661		94662	94663	94665	94663	94664	94665	94666		94667
121	Bottom Front		94668		94669	94670	94672	94670	94671	94672	94673		94674
122	Right Side Outer Panel		104968					104970					
123	Left Side Outer Panel		104969					104971					
124	Fan/Limit Access Panel		94898										
125	Wiring Access Panel		94897										
126	Bottom Pan		94687	94688	94689	94690	131607	94691	94692	94693	94694	94695	94696
127	Right Hinge Pin Assy for Bottom Panel		96445										
	Left Hinge Pin Assy for Bottom Panel		99351										
128	Fan Back Panel - Fan Model		94675		94676	161181	161184	N/A	161182	94680	161183		94682
129	Back Panel - Blower Model		99830		99831	99832	99835	99833	99834	99835	99836		99837
130	Latch Fastener for Fan Back		(2) **96435** - used prior to 2/95										
131	Horizontal Louver Assembly		94851		94855	94857	131803	94859	94863	94865	94867		94869
			(4)	(4)	(4)	(4)	(6)	(4)	(6)	(6)	(8)	(8)	(10)
132	Inner Left Side Panel		94842					94837					
133	Inner Right Side Panel (includes plate for electrical supply)	F/FE	99025					99026					
		B/BE	102346					102347					
134	Upper Stiffening Channel	B/BE	**100867** (2)					**100869** (2)					
135	Lower Stiffening Channel	B/BE	**100868** (2)					**100870** (2)					
136	Air Deflectors (not illustrated)												
	Horizontal - Right Side	F/FE	--	--	--	--	--	96141					94899
	Vertical - Right Side	All	96714	--	--	--	--	--	--	--	--	--	--
	Horizontal - Left Side	F/FE	--	96140		--	--	96140		96141			94900
	Vertical - Left Side	All	96714	--	--	--	--	--	--	--	--	--	--
137A	Vertical Barrier		94749					94750					
137B	Horizontal Barrier		94751										
138A (See NOTE Below)	Drafthood for Gravity Vent Sizes 25-200		102449		102450	102451	131608	102838	102839	102840	--	--	--
	Drafthood Assy for F/B Sizes 250-400		--	--	--	--	--	--	--	--	101909		101910
	Components: Drafthood Front		--	--	--	--	--	--	--	--	105310		105311
	Drafthood Right Rear		--	--	--	--	--	--	--	--	101903		101904
	Drafthood Left Rear		--	--	--	--	--	--	--	--	101906		101907
	Screws, #10x1/2"		--	--	--	--	--	--	--	--	51489 (6)		
138B	Flue Collar Assy - Models F & B		102363		102364	102365	132765	102844	102845		102846		102847
138C	Flue Collar Support - Models F & B		--	--	--	--	131992	--	--	--	102857		
138D	Cover for Horizontal/Vertical Vent Outlet		--	--	--	--	132764	--	--	--	102855		

NOTE: Effective 4/1/91, all gravity-vent Model F and B heaters include a blocked vent system requiring holes in the drafthood. When replacing a drafthood on a heater without a blocked vent switch, these holes will not affect heater operation.

Code	Description	25	50	75	100	125	130	165	200	250	300	400
(On sizes 25-100 and 130-200, the cover and flue collar assembly are one piece)												
139	Flue Baffle Assy - Models F & B	100859	100886	100887	100860	131811	100861	100862	100863	100864	100865	100866
140	Flue Collection Box Assy - FE & BE	97744		97746	97747	131804	97748	97749	97750	97751	97752	97753
141A	Flue Baffle - Models FE & BE	--	--	97783	97784	134766	97785	97786	97787	101008	101009	101010
141B	Flue Baffle Clamp - Models FE & BE	--	--	98196								
142	Adapter Back including Baffles - B/BE	100871		100872	100873	131975	100874	100875	100876	100877		100878

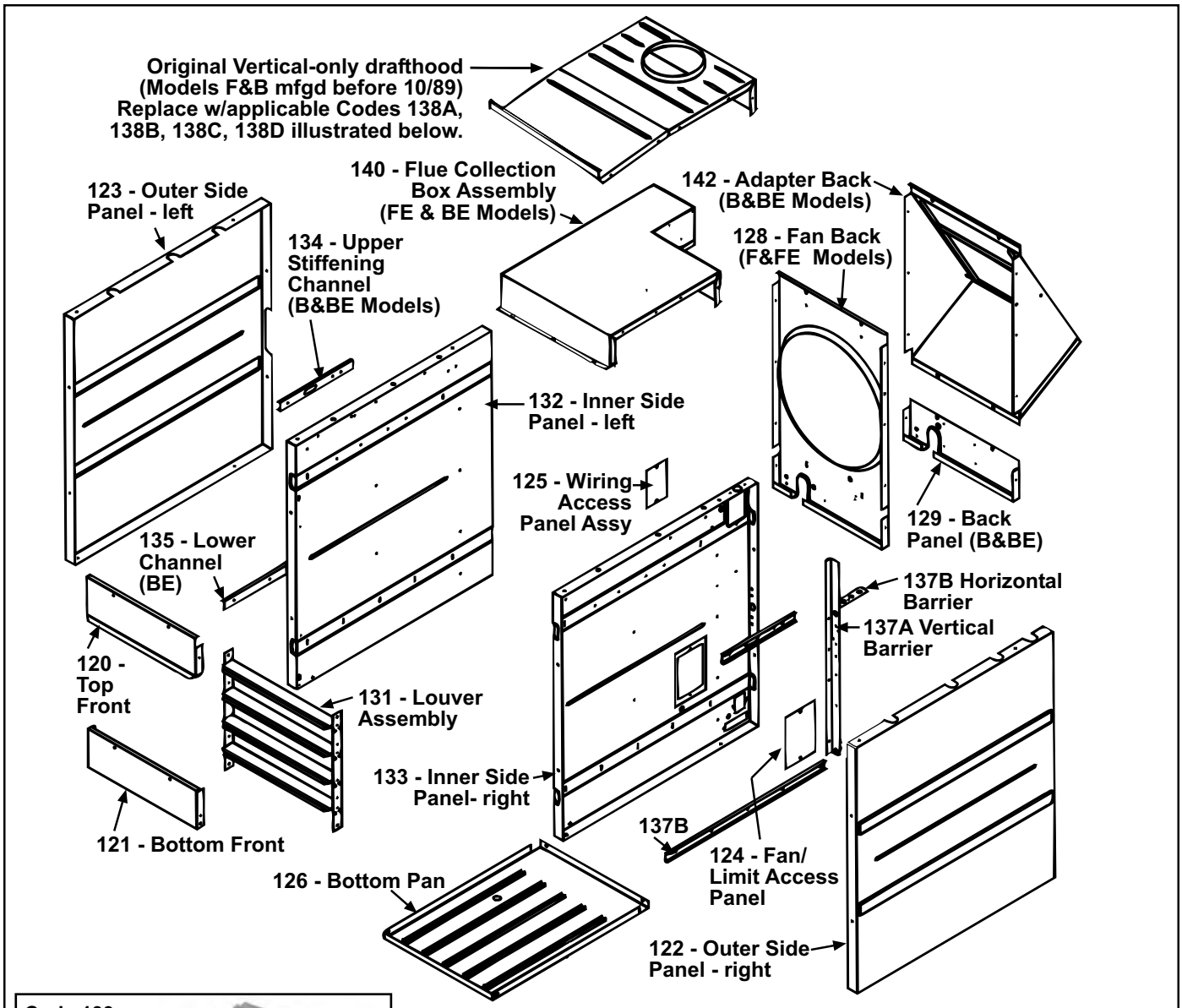

Code 139- Flue Baffle Assembly - Models F & B

Code 127 - Hinge Pin Assy

Code 130 - Latch Fastener for Fan Back (used on heaters mfgd prior to 2/95)

Model F/B Drafthoods (heaters manufactured beginning 10/89)

Sizes 25-100, 130-200

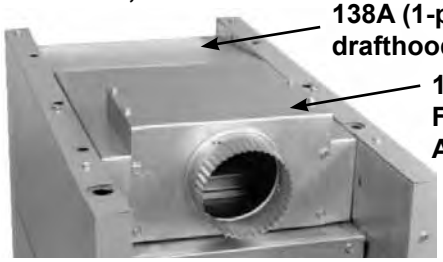

Sizes 125, 250-400

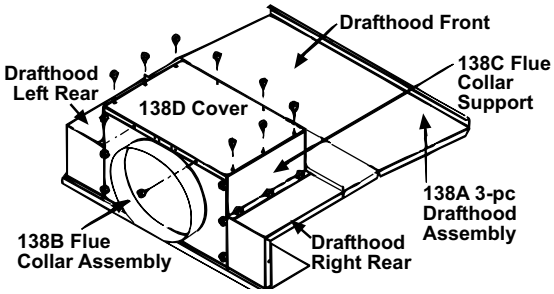

Cabinet Parts and Options (cont'd)

Code	Description	Size										
		25	50	75	100	125	130	165	200	250	300	400
145	Vertical Louver Assy (Same as CD1)	98500		98501	98502	136863	98503	98504	98505	98506		98507
145A	Vertical Louver Top/Btm Member only	97852		97853	97854	97856	97854	97855	97856	97857		97858
145B	Vertical Louver only	95937					95938					
146	Duct Flange Kit (Same as CD9) - B/BE	101194	101194	101195	101501	135591	101196	101197	101198	101199	101199	101200
146A	Duct Flange Top & Btm - in CD9 & AX4	101155	101155	101156	101157	101159	101157	101158	101159	101160	101160	101161
146B	Duct Flange Sides - in CD9 & AX4	101163	101163	101163	101163	101163	101164	101164	101164	101164	101164	101164
147	Maroon Touch-up Paint, 12oz spray can	207432 (louver color)										

Code 145 - Vertical Louver Assembly (Same as Option CD1)

On fan models, do not use vertical louvers with optional discharge nozzles.

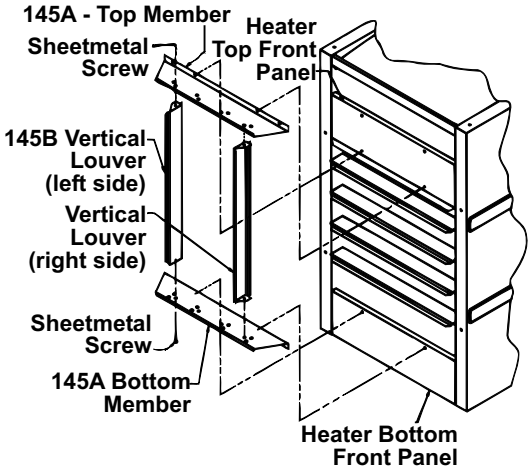

Code 146 - Duct Flange Parts

(Same as Option CD9; components used in Option AX4)

Code 149 - Vent Cap - Model F/B with Gravity Vent

NOTE: Same type of vent cap applies to a gravity or power vent installation. The required size of vent cap varies; for power vent sizes, see Code 80, page 14, for FE and BE or Code 101, page 15, for F and B with power vent option.

Applies to Model F&B Size with a gravity vent	Vent Cap Diameter	P/N
25-50	4"	111848
75	5"	111849
100	6"	111850
125, 130	* 8"	61857
165, 200	8"	61857
250, 300	10"	61866
400	12"	61875

* Run 7" vent pipe and use a field-supplied increaser with an 8" vent cap.

Hangers and Optional Hanger Kits

Code	Description	Models	P/N
150	Hanger Bracket Assy (2 standard on each fan unit, 4 standard on each blower unit)	F/FE25-400 & B/BE25-400	96386
151	Four-Point Suspension Kit (Same as Option CK7)	F/FE25-400	98508
152	Swivel Connection Kit for Two-Point Suspension (Same as Option CK8)	F/FE25-400	98509
153	Four-Point Suspension with Swivel Connections Kit (Same as Option CK9)	F/FE25-400	98510
154	Swivel Connection Kit for Four-Point Suspension (Same as Option CK10)	F/FE25-400 & B/BE25-400	98511
Components **in Swivel Connection Hanger Kits CK8, CK9, and CK10 listed above:**			
	Swivel Connection only (to adapt for hanging from 1" threaded pipe)	All	17627
	Lock Washers for installing Swivel Connections	All	5197
155	Pressure Switch Bracket only (required when installing Code 151 or 153 on Model FE Sizes 25-100 manufactured prior to 8/92 - Date Code ARI)	FE 25-100 mfgd prior to 8/92 - order separately; not included in option kits	98448
156	8-32 Nut for installation of Pressure Switch Bracket (Code 155)		31522
157	Four-Point Suspension Kit designed to carry a nearly equal load at each suspension point (Same as Option CK19)	B/BE165-400	165742
Components **in Hanger Kit Option CK19:**			
157A	Right Side Hanger Bar	B/BE165-400	162829
157B	Left Side Hanger Bar	B/BE165-400	162830
157C	HHD Tap Bolts 3/8-16NCX 11-1/2 #5	B/BE165-400	(4)114350
157D	3/8" Lockwasher	B/BE165-400	(8)5197

Code 150 - Hanger Bracket

Code 151 - Kit to Convert Fan Model to 4-Pt Suspension (Same as Opt CK7)

Code 152 - Swivel Connection Kit for 2-Pt Suspension

(Same as Opt CK8)

Code 153 - Kit to Convert to 4-Pt Suspension with Swivel Connections (Same as Option CK9)

Code 154 - Swivel Connection Kit for 4-Pt Suspension (Same as Option CK10)

Code 157 - 4-Pt Suspension for Models B/BE - designed to equalize the load (Same as Option CK19)

Optional Belt and Blower Guards - Blower Models B and BE

162 - Belt Guard

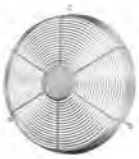

164 - Blower Guard

Code	Description	Size				
		25	50/75/100	125	130/165	200/250/300/400
160	Guard Package (Same as Option CD10) for Sizes 50-400 w/Belt Drive Motor	--	101539		101540	101541
161	Guard Package (Same as Option CD12) for Sizes 25-100 w/Direct Drive Motor	114548		--	--	--
Components:						
162	Belt Guard only - in Option CD10 & AZ6	--	193796		193797	193795
163	Contactor Mounting Bracket (not illustrated) - in Option CD10	--	101405		--	--
164	Blower Inlet Guard only - in Options CD10, CD12, AZ6, & AZ7	102474			102475	

Optional Blower/Filter Cabinet - Blower Models B and BE

Code	Description	Size								
		25/50	75	100	125	130	165	200	250/300	400
165	Blower/Filter Cabinet Pkg for Field Assy, Adaptable for 1" or 2" filters (Same as Option CW1)	101543	101544	101545	140836	101546	101547	101548	101549	101550
166	Blower/Filter Cabinet Package for Field Assy, includes 1" Filters (Same as Option CW2)	101628	101629	101630	140884	101631	101632	101633	101634	101635
167	Blower/Filter Cabinet Package for Field Assy, includes 2" Filters (Same as Option CW3)	101636	101637	101638	140885	101639	101640	101641	101642	101643
Components:										
168	Top and Bottom Panel	99707			140841	100642			--	--
169	Top Right and Bottom Left	--	--	--	--	--	--	--	101582	101584
170	Top Left and Bottom Right	--	--	--	--	--	--	--	101583	101585
171	Stiffening Channel for Top/Btm	--	--	--	--	--	--	--	101551	
172	Stiffening Angle for Top/Btm	--	--	--	--	--	--	--	101601	101602
173	Right Side Hanger	101578				101580				
174	Left Side Hanger	101579				101581				
175	Front Leg	99761	99762	99763	137404	100634	100635	100636	100637	100638
176	Top Filler Panel Assembly	101562	101563	101564	140838	101565	101566	101567	101568	101569
177	Bottom Filler Panel Assembly	101570	101571	101572	140840	101573	101574	101575	101576	101577
178	Rear Leg	99708				100639			100640	100641
179	Door	99712				100646				
180	Plastic Plug for Door Holes	82177								
181	Door Stop	99711				100645				
182	Center Filter Bracket Assembly	--	--	--	--	101624			101625	101626
183	Filter Angle	99710				101591			101592	101593
184	Filter Member	99709				101595			101596	101597
185	Permanent Aluminum Filters									
	16" x 20" x 1"	--	--	--	--	--	--	--	(2)101607	--
	20" x 20" x 1"	101608			--	--	--	--	(2)101608	--
	16" x 25" x 1"	--	--	--	101609				--	(2)101609
	20" x 25" x 1"	--	--	--	101610				--	(2)101610
	16" x 20" x 2"	--	--	--	--	--	--	--	(2)101620	--
	20" x 20" x 2"	101621			--	--	--	--	(2)101621	--
	16" x 25" x 2"	--	--	--	101622				--	(2)101622
	20" x 25" x 2"	--	--	--	101623				--	(2)101623

Blower/Filter Cabinet (with side panel removed)

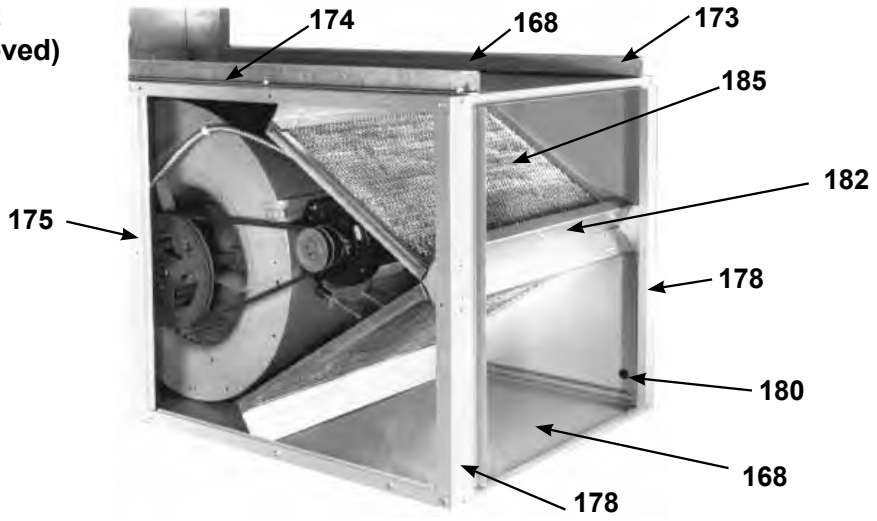

Optional Downturn Air Outlet Nozzles - All Models (See NOTE in the illustration.)

Code	Description	Size								
		25/50	75	100	125	130	165	200	250/300	400
195	Downturn Nozzle Kit, 25-65° Variable Air Deflection Range, including hanger brackets to convert fan units to 4-point suspension (Same as Option CD2)	98525	98526	98527	135512	98528	98529	98530	98531	98532
196	Downturn Nozzle Kit, 50-90° Variable Air Deflection Range, including hanger brackets to convert fan units to 4-point suspension (Same as Option CD3)	98533	98534	98535	135513	98536	98537	98538	98539	98540
197	Downturn Nozzle Kit, 25-65° Variable Air Deflection Range w/ Vertical Louvers, including hanger brackets to convert fan units to 4-pt suspension (Same as Option CD4)	98541	98542	98543	135510	98544	98545	98546	98547	98548
198	Downturn Nozzle Kit, 50-90° Variable Air Deflection Range with Vertical Louvers (Same as Option CD5) - B&BE ONLY	124918	124919	124920	137302	124921	124922	124923	124924	124926
Downturn Nozzle Parts in CD2, CD3, CD4 and CD5 (for vertical louver components, see page 18)										
199	Downturn Nozzle Side Panel only	97874				97875				
200	Downturn Nozzle Top Panel only	97876	97877	97878	135509	97879	97880	97881	97882	97904

Outlet Nozzle Options CD2 & CD4

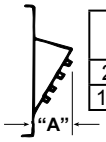

Sizes	"A"	Range of Air Deflection
25-125	9" (229mm)	25°-65°
130-400	13" (330mm)	25°-65°

Outlet Nozzle Options CD3 & CD5

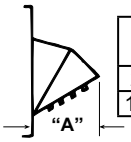

Sizes	"A"	Range of Air Deflection
25-125	16-1/2" (419mm)	50°-90°
130-400	23-1/2" (597mm)	50°-90°

NOTE: On fan models, DO NOT use vertical louvers in combination with Code 196 (Option CD3). DO NOT install Code 198 (Option CD5) on fan models.

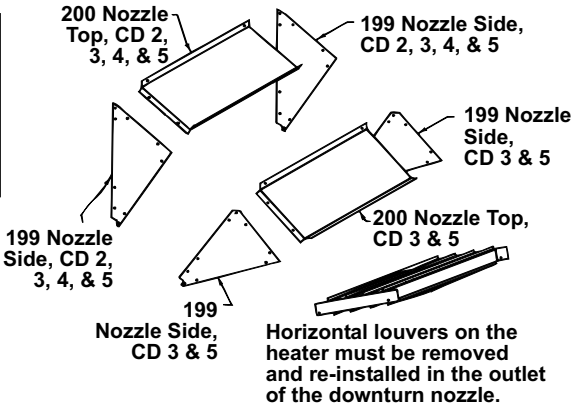

Optional Polytube Adapters - Blower Models B and BE Sizes 75-400

Code	Description	Size							
		75	100	125	130	165	200	250/300	400
210	Polytube Adapter for Suspended Units w/Polytube Discharge Above or Below Heater Discharge (Same as Opt CD6)	101243	101244	137299	122086	101245	101246	101247	101248
	Polytube Adapter for Suspended Units w/Polytube Discharge directly in line with Heater Discharge (Same as Opt CD11)	104227	104228	137301	122087	104229	104230	104231	104232
211	Polytube Adapter for Floor-Mounted Units (Same as Option CD8) - Requires the addition of guards, Code 50.	101680	101681	137300	122160	101682	101683	101684	101685

Size		75	100	125	130	165	200	250/300	400
Components Common to Suspended and Floor-Mounted Polytube Adapters:									
212	Discharge Panel Assy, **CD6,8,11**	101249			101250				
213	Discharge Collar Clamp - **CD6,8,11**	101499			146463				
214	Adapter Left Side, **CD6,8**	101253		132066	101254			101255	101254
215	Adapter Right Side, **CD6,8**	101259		132066	101260			101255	101260
214/ 215	Adapter Side, **CD11** (2 required)	104233		132195	104234			104235	104234
216	Adapter Top, **CD6,8**	101266	101267	132062	121548	101268	101269	101270	101271
	Adapter Top, **CD11**	104236	104237	132063	121546	104238	104239	104240	104241
217	Adapter Btm, **CD6,8**	101272	101273	132062	121547	101274	101275	101276	101277
	Adapter Btm, **CD11**	104242	104243	132064	121545	104244	104245	104246	104247
218	Polytube Holes Location Label	**101263** - **CD6, 8, 11** (not illustrated)							
Components for Floor-Mounted Adapter only:									
219	Blower Support Assembly	101686							
220	Blower Legs	101689							
221	Support Angles	101691							
222	Cross Brace	101690							
223	Adapter Legs	101692							

Code 211 - Polytube Adapter with Floor Mounts

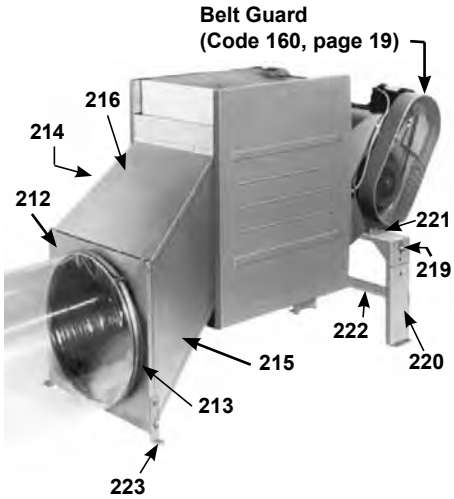

Specifications & illustrations subject to change without notice and without incurring obligations.
© Nortek Global HVAC, LLC 2015. All rights reserved.
All marks are the property of their respective organizations.
O'Fallon, MO I Printed in U.S.A. (12/15)
Form P-F/B (12-15), P/N 272436 R8

REZNOR®

Model UDAS

Separated Combustion, Low Static Commercial/Industrial Unit Heaters

Sizes 30-125 carry an additional approval for use in residential garage/workshops under CSA International Requirement 10.96 - U.S. and CR96-0005 - Canada

CSA 2.6b

ANSI Z83.8b

DESCRIPTION

Reznor® V3 Series Model UDAS gas-fired separated combustion unit heaters are available in 14 sizes ranging from 30,000 to 400,000 BTUH gas input. All sizes are approved for commercial/industrial installations. Sizes 30-125 carry an additional approval for use in attached residential garage/workshop application. Model UDAS heaters are designed for 82-83% thermal efficiency and are approved for installation in the United States and Canada by the Canadian Standards Association (CSA).

Reznor® V3 Series unit heaters have a refreshing new appearance with a glossy white cabinet finish and less visible hardware. Each size cabinet is easily suspended from either 2 or 4 suspension points. Or, an optional hanger kit for Sizes 30-125 allows for ceiling mounting. The low voltage terminal strip on the outside of the cabinet makes connecting control wiring easy with no panels to remove. The addition of a “G” terminal to the low voltage strip, along with the new design of the circuit board, allows for fan only operation (without adding relays). All units have a factory installed gas line nipple to the exterior of the cabinet for easy gas service connection.

The preeminent new internal feature is the TCORE² ® heat exchanger and single burner combustion system. Other standard features include a single-stage gas valve, multi-try direct spark ignition with timed lockout, pressure switch to verify vent flow, resiliently isolated venter motor, venter wheel with improved housing, resiliently isolated axial fan and motor assembly, a high temperature limit control, interlock door switch, and a built-in disconnect switch. Sizes 30-125 also include a flame rollout safety switch. Operation is controlled through an integrated circuit board. The circuit board monitors heater operation and has LED diagnostic indicator lights to identify abnormalities in control functions.

The 1ST ever separated combustion system in the commercial/industrial heating industry **was introduced on a Reznor heater** in the 1960s, and that proven technology is continued in this new separated combustion product. Model UDAS separated combustion units require installation of a specially designed combustion air/vent system including the unique concentric adapter box that allows for only one building penetration for both the vent and combustion air.

The new V3 Series unit heaters are designed to provide all the features you expect in a Reznor heater plus improved efficiency, easier installation, and a new look ***~ both inside and out.*** Look for the unique white unit with no visible front and bottom hardware, deep red louvers, black side handle, and angled corner to know you have a genuine Reznor unit by Thomas & Betts.

STANDARD FEATURES

- Sizes 30-400 certified for commercial/industrial heating application
- Sizes 30-125 carry an additional approval for use in residential garage/workshop heating applications
- 82-83% Thermal efficient ***~ TOP in its class!***
- 50-60°F Rise range
- TCORE² titanium stabilized aluminized steel heat exchanger
- Patented [A] single burner combustion system including a one-piece burner assembly
- 115/1/60 Supply voltage
- 115 Volt open fan motor with internal overload protection
- Transformer for 24-volt controls
- Integrated circuit board with diagnostic indicator lights
- Multi-try direct ignition with timed lockout
- Fan relay (included on the circuit board)
- Single-stage natural gas valve (field adjustable for operation to 9,000 ft. elevation ⊙)
- Vibration/noise isolated fan and venter motors
- Sealed control compartment houses all electrical components
- 2-pt ***and*** 4-pt Suspension ***~ standard on all sizes***
- Built-in disconnect switch (20A @ 115V Rating)
- External terminal strip for 24-volt wiring
- Sealed junction box for supply wiring
- External gas connection
- Fully gasketed door panel with safety door switch
- Full fan guard ***~ engineered for safety***
- Improved cabinet design with less visible hardware

[A] U.S. Patent No. 6,889,686.

OPTIONAL FEATURES - FACTORY INSTALLED

- Single-stage, propane gas valve (field adjustable for operation to 9,000 ft. elevation [B])
- Two-stage natural gas or propane gas valve - Sizes 60-400
- 409 or 316 Stainless steel heat exchangers
- Totally enclosed fan motor (Sizes 30-250, 115V only)

ACCESSORIES - FIELD INSTALLED

- Horizontal or Vertical Combustion Air/Vent Kit including concentric adapter [C]
- Thermostat
- Thermostat guard with locking cover
- Vertical louvers
- Downturn nozzle kits
- Gas conversion kits (natural and propane)
- Primary/secondary controls for zoning up to six units
- Ceiling suspension kit - Sizes 30-125
- Hanger kits for 1" pipe
- Stepdown transformer (for 208/115, 230/115 or 460/115 supply voltage)
- Manual shutoff valves

[B] Pressure switch change required for installations above 6,000 ft.
[C] Selection of either a horizontal or vertical combustion air/vent kit is required.

TECHNICAL DATA

Model UDAS

Size		30	45	60	75	100	125	150	175	200	225	250	300	350	400
Input Heating Capacity	BTUH	30,000	45,000	60,000	75,000	105,000	120,000	150,000	175,000	200,000	225,000	250,000	300,000	350,000	400,000
	(kw/h)	(8.8)	(13.2)	(17.6)	(22.0)	(30.8)	(35.2)	(44.0)	(51.3)	(58.6)	(65.9)	(73.3)	(87.9)	(102.6)	(117.2)
Thermal Efficiency (%)		82	83	83	83	83	83	83	83	83	83	83	83	83	83
Output Heating Capacity [D]	BTUH	24,600	37,350	49,800	62,250	87,150	99,600	124,500	145,250	166,000	186,750	207,500	249,000	290,500	332,000
	(kw/h)	(7.2)	(10.9)	(14.6)	(18.2)	(25.5)	(29.2)	(36.5)	(42.6)	(48.7)	(54.7)	(60.8)	(73.0)	(85.1)	(97.3)
Gas Connection (inches) [E]	Natural	1/2	1/2	1/2	1/2	1/2	1/2	1/2	1/2	1/2	3/4	3/4	3/4	3/4	3/4
	Propane	1/2	1/2	1/2	1/2	1/2	1/2	1/2	1/2	1/2	3/4	3/4	3/4	3/4	3/4
Vent Connection [F] (inches diameter)		4	4	4	4	4	4	5	5	5	5	5	6	6	6
Combustion Air Inlet [F] (inches diameter)		4	4	4	4	4	4	6	6	6	6	6	6	6	6
Control Amps (24 volt)		1.0	1.0	1.0	1.0	1.0	1.0	1.0	1.0	1.0	1.0	1.0	1.0	1.0	1.0
Full Load Amps (115 volt)		1.9	2.4	2.4	3.3	3.9	5.1	3.8	3.8	4.6	7.5	7.5	11.0	11.0	11.0
Maximum Over Current Protection (115V) [G]		15	15	15	15	15	15	15	15	15	15	15	20	20	20
Normal Power Consumption (watts)		109	155	155	217	276	354	392	392	491	747	747	1086	1086	1086
Discharge Air Temperature Rise (°F)		50	55	60	60	60	60	60	60	60	60	60	60	60	60
Air Volume	CFM	456	629	769	961	1345	1537	1921	2242	2562	2882	3202	3843	4483	5123
	(M^3/min)	(12.9)	(17.8)	(21.8)	(27.2)	(38.1)	(43.5)	(54.4)	(63.5)	(72.5)	(81.6)	(90.7)	(108.8)	(126.9)	(145.1)
Discharge Air Opening Area	ft^2	0.96	0.96	1.25	1.25	2.01	2.01	2.56	2.56	2.56	3.51	3.51	4.79	4.79	4.79
	(M^2)	(0.09)	(0.09)	(0.12)	(0.12)	(0.19)	(0.19)	(0.24)	(0.24)	(0.24)	(0.33)	(0.33)	(0.45)	(0.45)	(0.45)
Output Velocity	FPM	475	656	616	770	668	763	752	877	1003	820	911	802	936	1069
	(M/min)	(145)	(200)	(188)	(235)	(204)	(233)	(229)	(267)	(306)	(250)	(278)	(244)	(285)	(326)
Fan Motor HP [H]	Open	0.02	0.03	0.03	0.06	1/30	1/20	1/6	1/6	1/6	1/4	1/4	1/2	1/2	1/2
	Enclosed	0.06	0.06	0.06	0.06	1/20	1/20	1/4	1/4	1/4	1/4	1/4	1/2	1/2	1/2
Fan Motor	RPM	1550	1550	1550	1550	1050	1050	1050	1050	1050	1050	1050	1050	1050	1050
Fan Diameter	inches	10	10	12	12	16	16	18	18	18	20	20	24	24	24
Sound Level	dba @ 15 ft	40	40	40	49	54	55	51	52	53	56	56	59	61	62
Approximate Net Weight	lbs	55	60	68	73	97	102	173	188	188	204	216	270	295	307
	(kg)	(25)	(27)	(31)	(33)	(44)	(46)	(78)	(85)	(85)	(93)	(98)	(122)	(134)	(139)
Approximate Ship Weight	lbs	63	68	76	81	120	125	206	221	221	247	259	323	348	360
	(kg)	(29)	(31)	(34)	(37)	(54)	(57)	(93)	(100)	(100)	(112)	(117)	(147)	(158)	(163)

[D] CSA rating for altitudes to 2000 ft.
[E] Size shown is for gas connection to a single stage gas valve, not supply line size.
[F] Smaller and/or larger vent and combustion air pipe diameters may be allowed; refer to the Venting Installation Manual for Separated Combustion Units, Form I-V-SC. If vent diameter is different from vent connection, reducer/enlargers will be field-required.
[G] MOP = 2.25 x largest motor FLA + remaining load. Answer is rounded down to the next size of commercially available circuit breaker or fuse.
[H] All other information in this table is based on a heater equipped with a standard 115 volt open fan motor.

For installations where dirt, dust, and other air borne contamination is present in the indoor environment, it is recommended to use separated combustion units (Model UDAS). These models use air from outside the space for combustion. This will help reduce the build up of contaminates on the burner which would affect the combustion process. Refer to the installation manuals for recommended frequency of maintenance and cleaning.

DIMENSIONS

Model UDAS ±1/16" (2mm)

Size	A	B	C	D	E	F	G	H	J	K	M	N	P	Q	R	S	T
30, 45	12 1/8	26 5/8	10	13 13/16	26	21 9/16	5 3/16	6 1/2	2 11/16	3 7/8	17 3/8	11/16	4 5/16	13	9 9/16	2 15/16	2 15/16
60	15 1/8	26 5/8	13	13 13/16	27	21 9/16	7 7/8	6 1/2	5 1/2	3 7/8	17 3/8	11/16	4 5/16	13	10 1/2	3 1/4	2 15/16
75	15 1/8	26 5/8	13	13 13/16	27 5/8	21 9/16	7 7/8	6 1/2	5 1/2	3 7/8	17 3/8	11/16	4 5/16	13	10 1/2	3 1/4	2 15/16
100	23 1/8	26 5/8	21	13 13/16	28 5/8	21 9/16	14 1/2	6 1/2	8 3/4	3 7/8	17 3/8	11/16	4 5/16	13	10 1/2	4 5/8	2 15/16
125	23 1/8	26 5/8	21	13 13/16	29 3/8	21 9/16	14 1/2	6 1/2	8 3/4	3 7/8	17 3/8	11/16	4 5/16	13	10 1/2	4 5/8	2 15/16
150, 175, 200	20 1/8	38 3/16	16	23	42	35 3/8	8 1/2	8 1/4	5 7/16	6 1/2	25 11/16	1 3/8	8 3/16	22 3/16	16 3/8	4 1/8	8 5/16
225, 250	26 1/8	38 3/16	22	23	42	35 3/8	13 1/16	8 13/16	9	6 1/2	25 11/16	1 3/8	8 3/16	22 3/16	15 5/8	5 9/16	8 5/16
300, 350, 400	34 1/8	41	30	23	42	35 3/8	17 1/16	9	11 13/16	7 5/16	27 11/16	1 3/8	8 3/16	22 3/16	16 3/16	9 1/16	8 9/16

Size	A	B	C	D	E	F	G	H	J	K	M	N	P	Q	R	S	T
30, 45	(308)	(676)	(254)	(351)	(660)	(548)	(132)	(165)	(68)	(98)	(441)	(17)	(110)	(330)	(243)	(75)	(75)
60	(384)	(676)	(330)	(351)	(686)	(548)	(200)	(165)	(140)	(98)	(441)	(17)	(110)	(330)	(267)	(83)	(75)
75	(384)	(676)	(330)	(351)	(702)	(548)	(200)	(165)	(140)	(98)	(441)	(17)	(110)	(330)	(267)	(83)	(75)
100	(587)	(676)	(533)	(351)	(727)	(548)	(368)	(165)	(222)	(98)	(441)	(17)	(110)	(330)	(267)	(117)	(75)
125	(587)	(676)	(533)	(351)	(746)	(548)	(368)	(165)	(222)	(98)	(441)	(17)	(110)	(330)	(267)	(117)	(75)
150, 175, 200	(511)	(970)	(406)	(584)	(1,067)	(899)	(216)	(210)	(138)	(165)	(652)	(35)	(208)	(564)	(416)	(105)	(211)
225, 250	(664)	(970)	(559)	(584)	(1,067)	(899)	(332)	(224)	(229)	(165)	(652)	(35)	(208)	(564)	(397)	(141)	(211)
300, 350, 400	(867)	(1,041)	(762)	(584)	(1,067)	(899)	(433)	(229)	(300)	(186)	(703)	(35)	(208)	(564)	(411)	(230)	(217)

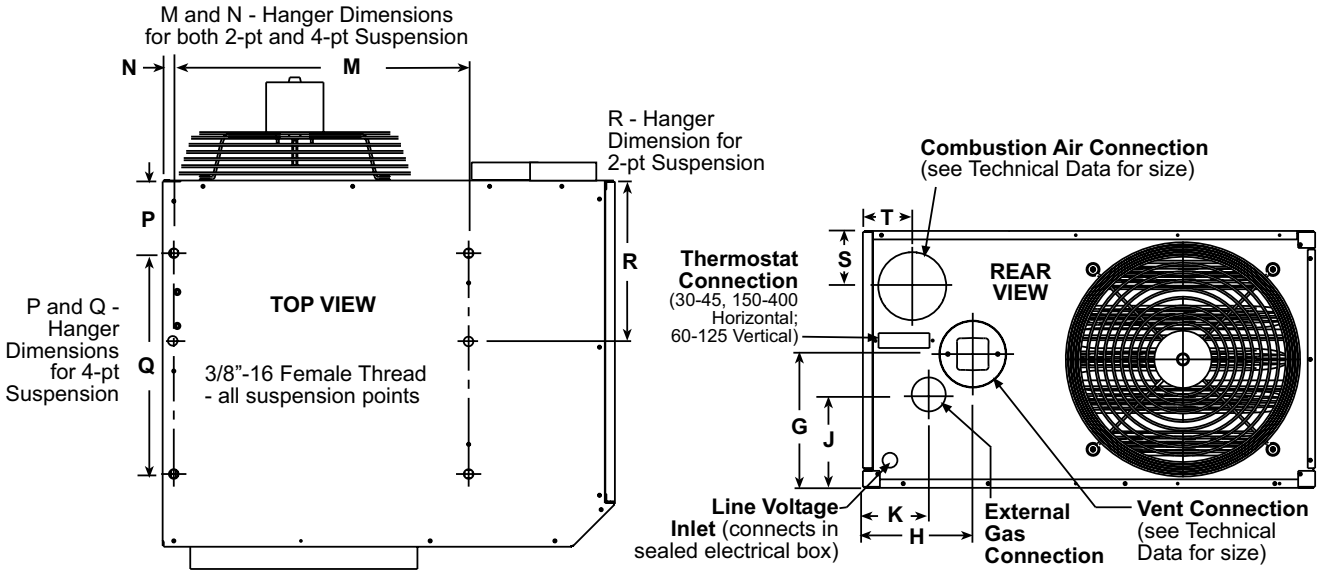

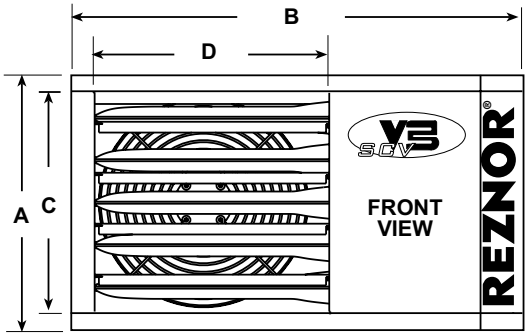

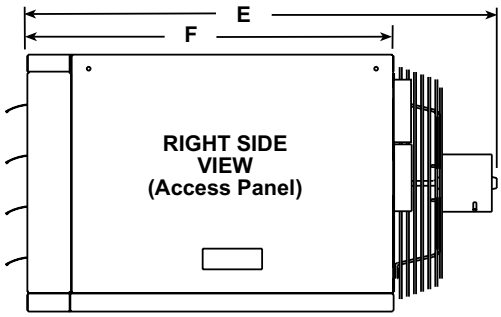

CLEARANCE FROM COMBUSTIBLES

Size	Top		Flue Connector		Access Panel [J]		Non-Access Side		Bottom [K]		Rear [L]	
	inches	mm	inches	mm	inches	mm	inches	mm	inches	mm	inches	mm
30-125	1	25	6	152	18	457	1	25	1	25	18	457
150-400	4	102	6	152	18	457	2	51	1	25	18	457

[J] Access Panel clearance is required for service clearance to controls
[K] Suspend the heater so that the bottom is a minimum of 5' (1.5M) above the floor.
[L] Rear clearance is required for air movement. Rear clearance should be measured from the fan motor.
Refer to Reznor web site www.RezSpec.com for venting/inlet air requirements for Reznor Separated Combustion Units

Modine Manufacturing Company
1221 Magnolia Ave., Buena Vista, VA 24416
Phone: 800-828-4328

UNIT HEATER FOR INDUSTRIAL / COMMERCIAL USE
AEROTHERME POUR USAGE INDUSTRIEL / COMMERCIAL

Made in U.S.A.

MODEL NUMBER / NUMERO DE MODELE	PDP125AE0130	MIN. INPUT BTU/HR / DEBIT CALORIFIQUE MIN. BTU/HEURE		VOLTS 115	AMPS 4	PHASE 1	HERTZ 60
SERIAL NUMBER / NUMERO DE SERIE	39011012905—5230	MIN. INLET PRESS. FOR PURPOSE OF INPUT ADJUSTMENT / PRESSION D'ALIMENTATION EN GAZ MIN. ADMISE	6 IN W.C. PO.CD'E	CATEGORY / CATÉGORIE I or III	
TYPE OF GAS / TYPE DE GAZ	Natural	MANIFOLD PRESSURE / PRESSION A LA TUBULURE D'ALIMENTATION	3.5 IN W.C. PO.CD'E		
		MAXIMUM EXTERNAL STATIC PRESSURE / PRESSION STATIQUE EXTERIEUR MAXIMUM	0.0 IN W.C. PO.CD'E		

	0 TO 2000 FT. / 0 ET 610 M.	(IN CANADA) 2000 TO 4500 FT. / 610 ET 1370 M.
INPUT BTU/HR / DEBIT CALORIFIQUE BTU/HEURE	125000	112500
OUTPUT BTU/HR / REDEMMENT BTU/HEURE	100000	90000
ORIFICE SIZE / DIM. DE L'INJECTEUR	26	29

MINIMUM CLEARANCE TO COMBUSTIBLE MATERIAL / DÉGAGEMENT MINIMUM POUR MATIÈRES COMBUSTIBLES

TOP / HAUT	3 IN PO.	RIGHT SIDE / COTÉ DROIT	1 IN PO.
BOTTOM / BAS	12 IN PO.	VENT CONNECTOR / CONNECTEUR D'AERATION	6 IN PO.
LEFT SIDE / COTÉ GAUCHE	1 IN PO.		

APPROVALS

ACCEPTED BY CITY OF NEW YORK: MEA 203-03-E

PENNSYLVANIA APPROVAL NO. 3465

APPROVED FOR USE IN MASSACHUSETTS

APPROVED FOR USE IN CA BY THE CEC WHEN EQUIPED WITH IPI

DESIGN COMPLIES WITH UNIT HEATER STANDARD
ANS Z83.8b-2004
CSA 2.6b-2004

CERTIFIED ®

DESIGN CERTIFIED ®

X SERIES UNIT HEATER IS FOR USE WITH DUCTS AT A TEMPERATURE RISE RANGE / SERIE AEOTHERME FONCTIONNE AVECS DES CONDUITS A UNE ELEVATION DE TEMPERATURE DE X °F (X °C)

GENERAL

(IN USA) FOR INSTALLATIONS ABOVE 2000 FEET, DERATE 4 PERCENT FOR EACH 1000 FEET OF ELEVATION ABOVE SEA LEVEL.

LUBRICATE MOTOR EVERY 2000 HOURS OF OPERATION WITH SAE #20 OIL.

FILTERS, WHEN USED ON BLOWER UNIT HEATERS, MUST BE INSTALLED EXTERNAL TO THE HEATER CASING.

PROPELLER UNIT HEATERS ARE NOT FOR USE WITH FILTERS.

INSTALLATIONS IN AIRCRAFT HANGARS, PARKING STRUCTURES, AND REPAIR GARAGES SHALL BE IN ACCORDANCE WITH THE STANDARD ON AIRCRAFT HANGARS, ANSI/NFPA 409, THE STANDARD FOR PARKING STRUCTURES, ANSI/NFPA 88A, THE STANDARD FOR REPAIR GARAGES, ANSI/NFPA 88B, AND IN CANADA WITH THE CAN1-0349 CODES.

LIGHTING INSTRUCTIONS

FOR UNITS WITH INTERMITTENT PILOT

1. SET THERMOSTAT TO LOWEST SETTING. MOVE GAS CONTROL KNOB (OR LEVER) TO OFF AND WAIT 5 MINUTES.
2. MOVE GAS CONTROL KNOB (OR LEVER) TO ON.
3. SET THERMOSTAT TO DESIRED SETTING. (PILOT AND MAIN BURNER WILL LIGHT AUTOMATICALLY WHEN THERMOSTAT CALLS FOR HEAT.)

FOR UNITS WITH STANDING PILOT

1. SET THERMOSTAT TO LOWEST SETTING. MOVE GAS CONTROL KNOB (OR LEVER) TO OFF AND WAIT 5 MINUTES.
2. MOVE GAS CONTROL KNOB TO PILOT (OR MOVE GAS CONTROL LEVER TO SET) AND DEPRESS RESET BUTTON WHILE LIGHTING THE PILOT AND HOLD FOR 1 MINUTE AFTER PILOT IS LIT.
3. MOVE GAS CONTROL KNOB (OR LEVER) TO ON.
4. SET THERMOSTAT TO DESIRED SETTING.

SHUT DOWN INSTRUCTIONS: TURN OFF POWER & CLOSE ALL GAS VALVES.

GÉNÉRAL

TOUTES LES 2000 HEURES DE FONCTIONNEMENT LUBRIFIER LE MOTEUR AVEC DE L'HUILE SAE N° 20.

LORSQU'ILS SONT UTILISÉS SUR LES APPAREILS DE CHAUFFAGE À SOUFFLANTE LES FILTRES DOIVENT ÊTRE INSTALLÉS À L'EXTÉRIEUR DU BOYTIER DE L'APPAREIL.

NE PAS UTILISER DE FILTERS AVEC LES APPAREILS DE CHAUFFAGE À PROPULSION.

L'INSTALLATIONS DANS LES HANGARS D'AERONEFS DOIT CONFORMER AUX EXIGENCIES DES AUTORITES COMPETENTES. ET DANS LES GARAGES PUBLICS DOIT CONFORMER AUX CODES CAN 1-0349.

INSTRUCTIONS DE FER MEIURE – COUPER LE COURANT ET FERMER TOUTES LES ROBINETS A GAZ

POUR UNITE EQUIEE D' UNE VEILLEUSE INTERMITTENTE

1. RÉGLER LE THERMOSTAT SUR LE DEGRÉ LE PLUS BAS TOURNER LA MOLETTE (OU LE LEVIER) DE COMMANDE DU GAZ SUR OFF ET ATTENDRE 5 MINUTES.
2. TOURNER LA MOLETTE (OU LE LEVIER) DE COMMANDE DU GAZ SUR ON.
3. LA VEILLEUSE ET LE BRÛLEUR PRINCIPAL S'ALLUMERONT AUTOMATIQUEMENT QUAND LE THERMOSTAT LES DÉCLENCHERA

POUR UNITE EQUIEE D'UNE VEILLEUSE PERMANENTE

1. RÉGLER LE THERMOSTAT SUR LE DEGRÉ LE PLUS BAS. TOURNER LA MOLETTE (OU LE LEVIER) DE COMMANDE DU GAZ SUR OFF ET ATTENDRE 5 MINUTES.
2. TOURNER LA MOLETTE DE COMMANDE DU GAZ SUR PILOT (OU TOURNER LE LEVIER DE COMMANDE SUR SET) ET, TOUT EN ALLUMANT LA VEILLEUSE, APPUYER SUR LE BOUTON DE DÉCLENCHEMENT ET LE MAINTENIR ENFONCÉ PENDANT 1 MINUTE APRÈS ALLUMAGE DE LA
3. TOURNER LA MOLETTE (OU LE LEVIER) DE COMMANDE DU GAZ SUR ON
4. RÉGLER LE THERMOSTAT SUR LE DEGRÉ DÉSIRÉ

COMMON REPLACEMENT PARTS

For parts ordering, contact the parts wholesaler or the manufacturer's representative serving your area.

When inquiring about parts, always provide model number, serial number, description, and part number. When ordering parts, provide part number listed.

For service, contact your local qualified installation and service contractor or appropriate utility company.

Combination Gas Control	5H71927	24V Control Transformer	5H71956B1	Main Burner	3H33073B16
Ignition Control	5H73324	Fan/Blower Motor	9F30212	Belt (Blower)	None
Limit Control	5H73593	Time Delay Relay	5H71675	Thermocouple	None
Pressure Switch	5H73591B8	Hot Surface Igniter	3H36704B1	Ignition Electrode	5H78233C10

50/73/78 REV F

⚠ WARNING
installation, adjustment, alter-
maintenance can cause

MODINE

6-580.10
5H0782130000

November, 2014

INSTALLATION AND SERVICE MANUAL
power vented gas-fired unit heaters models PDP and BDP

Intertek

All models approved for use in California by the CEC and in Massachusetts. Unit heater is certified for non-residential applications.

FOR YOUR SAFETY

The use and storage of gasoline or other flammable vapors and liquids in open containers in the vicinity of this appliance is hazardous.

⚠ WARNING

1. **Improper installation, adjustment, alteration, service, or maintenance can cause property damage, injury, or death, and could cause exposure to substances which have been determined by various state agencies to cause cancer, birth defects, or other reproductive harm. Read the installation, operating, and maintenance instructions thoroughly before installing or servicing this equipment.**
2. **Do not locate ANY gas-fired units in areas where chlorinated, halogenated, or acidic vapors are present in the atmosphere. These substances can cause premature heat exchanger failure due to corrosion, which can cause property damage, serious injury, or death.**

IMPORTANT

The use of this manual is specifically intended for a qualified installation and service agency. All installation and service of these units must be performed by a qualified installation and service agency.

Inspection on Arrival

1. Inspect unit upon arrival. In case of damage, report it immediately to transportation company and your local Modine sales representative.
2. Check rating plate on unit to verify that power supply meets available electric power at the point of installation.
3. Inspect unit upon arrival for conformance with description of product ordered (including specifications where applicable).

FOR YOUR SAFETY

WHAT TO DO IF YOU SMELL GAS:

1. **Open windows.**
2. **Do not try to light any appliance.**
3. **Do not touch any electrical switch; do not use any phone in your building.**
4. **Extinguish any open flame.**
5. **Immediately call your gas supplier from a neighbor's phone. Follow the gas supplier's instructions. If you can not reach your gas supplier, call your fire department.**

Table of Contents

Inspection on Arrival 1
Special Precautions 2
SI (Metric) Conversion Factors 3
Before You Begin 3
Unit Location 4
Combustible Material and Service Clearances 4
Unit Mounting 5
Installation 6
Venting 6
Gas Connections 10
High-Altitude Accessory Kit 11
Electrical 13
Start-Up Procedure/Operation 15
Unit Components 18
Performance Data - General 19
Performance Data - Downturn Hoods 22
Dimensions 24
Service/Troubleshooting 26
Serial/Model Number Designations 29
Commercial Warranty . . . . . Back Cover

THIS MANUAL IS THE PROPERTY OF THE OWNER.
PLEASE BE SURE TO LEAVE IT WITH THE OWNER WHEN YOU LEAVE THE JOB.

SPECIAL PRECAUTIONS

SPECIAL PRECAUTIONS

THE INSTALLATION AND MAINTENANCE INSTRUCTIONS IN THIS MANUAL MUST BE FOLLOWED TO PROVIDE SAFE, EFFICIENT AND TROUBLE-FREE OPERATION. IN ADDITION, PARTICULAR CARE MUST BE EXERCISED REGARDING THE SPECIAL PRECAUTIONS LISTED BELOW. FAILURE TO PROPERLY ADDRESS THESE CRITICAL AREAS COULD RESULT IN PROPERTY DAMAGE OR LOSS, PERSONAL INJURY, OR DEATH. THESE INSTRUCTIONS ARE SUBJECT TO ANY MORE RESTRICTIVE LOCAL OR NATIONAL CODES.

HAZARD INTENSITY LEVELS

1. **DANGER:** Indicates an imminently hazardous situation which, if not avoided, WILL result in death or serious injury.
2. **WARNING:** Indicates a potentially hazardous situation which, if not avoided, COULD result in death or serious injury.
3. **CAUTION:** Indicates a potentially hazardous situation which, if not avoided, MAY result in minor or moderate injury.
4. **IMPORTANT:** Indicates a situation which, if not avoided, MAY result in a potential safety concern.

⚠ DANGER

Appliances must not be installed where they may be exposed to a potentially explosive or flammable atmosphere.

⚠ WARNING

1. Gas fired heating equipment must be vented - do not operate unvented.
2. A built-in power exhauster is provided - additional external power exhausters are not required or permitted.
3. If an existing heater is being replaced, it may be necessary to resize the venting systems. Improperly sized venting systems can result in vent gas leakage or the formation of condensate. Refer to the National Fuel Gas Code ANSI Z223.1 (NFPA 54) or CSA B149.1 – latest edition. Failure to follow these instructions can result in injury or death.
4. Under no circumstances should two sections of double wall vent pipe be joined together within one horizontal vent system due to the inability to verify complete seal of inner pipes.
5. All field gas piping must be pressure/leak tested prior to operation. Never use an open flame. Use a soap solution or equivalent for testing.
6. Gas pressure to appliance controls must never exceed 14" W.C. (1/2 psi).
7. To reduce the opportunity for condensation, the minimum sea level input to the appliance, as indicated on the serial plate, must not be less than 5% below the rated input, or 5% below the minimum rated input of dual rated units.
8. Disconnect power supply before making wiring connections to prevent electrical shock and equipment damage.
9. All appliances must be wired strictly in accordance with wiring diagram furnished with the appliance. Any wiring different from the wiring diagram could result in a hazard to persons and property.
10. Any original factory wiring that requires replacement must be replaced with wiring material having a temperature rating of at least 105°C.
11. Ensure that the supply voltage to the appliance, as indicated on the serial plate, is not 5% greater than the rated voltage.

⚠ WARNING

12. When servicing or repairing this equipment, use only factory-approved service replacement parts. A complete replacements parts list may be obtained by contacting the factory. Refer to the rating plate on the appliance for complete appliance model number, serial number, and company address. Any substitution of parts or controls not approved by the factory will be at the owner's risk.

⚠ CAUTION

1. All literature shipped with this unit should be kept for future use for servicing or service diagnostics. Do not discard any literature shipped with this unit.
2. Consult piping, electrical, and venting instructions in this manual before final installation.
3. Do not attach ductwork, air filters, or polytubes to any propeller unit heater.
4. Clearances to combustible materials are critical. Be sure to follow all listed requirements.
5. Heaters are designed for use in heating applications with ambient startup temperatures between -40°F and 90°F and ambient operating temperatures between 40°F and 90°F.
6. Do not install unit outdoors.
7. In garages or other sections of aircraft hangars such as offices and shops that communicate with areas used for servicing or storage, keep the bottom of the unit at least 7' above the floor unless the unit is properly guarded to provide user protection from moving parts. In parking garages, the unit must be installed in accordance with the standard for parking structures ANSI/NFPA 88A - latest edition, and in repair garages the standard for repair garages NFPA 30A - latest edition (formerly NFPA 88B). In Canada, installation of heaters in airplane hangars must be in accordance with the requirements of the enforcing authority, and in public garages in accordance with the current CSA-B149 codes.
8. In aircraft hangars, keep the bottom of the unit at least 10' from the highest surface of the wings or engine enclosure of the highest aircraft housed in the hangars and in accordance with the requirements of the enforcing authority and/or NFPA 409 - latest edition.
9. Installation of units in high humidity or salt water atmospheres will cause accelerated corrosion, resulting in a reduction of the normal life of the units.
10. Do not install units below 7' measured from the bottom of the unit to the floor in commercial applications (unless unit is properly guarded to provide user protection from moving parts).
11. Be sure no obstructions block air intake and discharge of unit heaters.
12. The minimum distance from combustible material is based on the combustible material surface not exceeding 160°F. Clearance from the top of the unit may be required to be greater then the minimum specified if heat damage, other than fire, may occur to materials above the unit heater at the temperature described.
13. Allow 18" of clearance at rear (or 12" beyond end of motor at rear of unit, whichever is greater) and access side to provide ample air for proper operation of fan.
14. Installation must conform with local building codes or in the absence of local codes, with the National Fuel Gas Code, ANSI Z223.1 (NFPA 54) - latest edition. In Canada installation must be in accordance with CSA-B149.1.

SPECIAL PRECAUTIONS / SI (METRIC) CONVERSION FACTORS

⚠ CAUTION

15. Purging of air from gas supply line should be performed as described in the National Fuel Gas Code, ANSI Z223.1 (NFPA 54) - latest edition. In Canada, installation must be in accordance with CSA-B149.1.
16. When leak testing the gas supply piping system, the appliance and its combination gas control must be isolated during any pressure testing in excess of 14" W.C. (1/2 psi).
17. The unit should be isolated from the gas supply piping system by closing its field installed manual shut-off valve. This manual shut-off valve should be located within 6' of the heater.
18. Turn off all gas before installing appliance.
19. Ensure that the supply voltage to the appliance, as indicated on the serial plate, is less than 5% below the rated voltage.
20. Check the gas inlet pressure at the unit upstream of the combination gas control. The inlet pressure should be 6-7" W.C. on natural gas or 12-14" W.C. on propane. If inlet pressure is too high, install an additional pressure regulator upstream of the combination gas control.
21. Service or repair of this equipment must be performed by a qualified service agency.
22. Do not attempt to reuse any mechanical or electronic ignition controller which has been wet. Replace defective controller.

IMPORTANT

1. To prevent premature heat exchanger failure, do not locate ANY gas-fired appliances in areas where corrosive vapors (i.e. chlorinated, halogenated, or acidic) are present in the atmosphere.
2. To prevent premature heat exchanger failure, the input to the appliance as indicated on the serial plate, must not exceed the rated input by more than 5%.
3. Start-up and adjustment procedures must be performed by a qualified service agency.

BEFORE YOU BEGIN

⚠ CAUTION

1. All literature shipped with this unit should be kept for future use for servicing or service diagnostics. Leave manual with the owner. Do not discard any literature shipped with this unit.
2. Consult piping, electrical, and venting instructions in this manual before final installation.
3. Do not attach ductwork, air filters, or polytubes to any propeller unit heater.

In the U.S., the installation of these units must comply with the National Fuel Gas Code, ANSI Z223.1 (NFPA 54) - latest edition and other applicable local building codes. In Canada, the installation of these units must comply with local plumbing or waste water codes and other applicable codes and with the current code CSA-B149.1.

1. All installation and service of these units must be performed by a qualified installation and service agency only as defined in ANSI Z223.1 (NFPA 54) - latest edition or in Canada by a licensed gas fitter.
2. This unit is certified with the controls furnished. For replacements parts, please order according to the replacement parts list on serial plate. Always know your model and serial numbers. Modine reserves the right to substitute other authorized controls as replacements.
3. Unit is balanced for correct performance. Do not alter fan or operate motors at speeds below what is shown in this manual.
4. Information on controls is supplied separately.
5. The same burner is used for natural and propane gas.

SI (Metric) Conversion Factors

To Convert	Multiply By	To Obtain
"W.C.	0.249	kPa
°F	(°F-32) x 5/9	°C
BTU	1.06	kJ
Btu/ft^3	37.3	kJ/m^3
Btu/hr	0.000293	kW
CFH (ft^3/hr)	0.000472	m^3/min
CFH (ft^3/hr)	0.00000787	m^3/s
CFM (ft^3/min)	0.0283	m^3/min
CFM (ft^3/min)	0.000472	m^3/s
feet	0.305	m
Gal/Hr.	0.00379	m^3/hr
Gal/Hr.	3.79	l/hr
gallons	3.79	l
Horsepower	746	W
inches	25.4	mm
pound	0.454	kg
psig	6.89	kPa
psig	27.7	"W.C.

SI (METRIC) CONVERSION FACTORS / UNIT LOCATION

UNIT LOCATION

⚠ DANGER

Appliances must not be installed where they may be exposed to a potentially explosive or flammable atmosphere.

⚠ CAUTION

1. Clearances to combustible materials are critical. Be sure to follow all listed requirements.
2. Heaters are designed for use in heating applications with ambient startup temperatures between -40°F and 90°F and ambient operating temperatures between 40°F and 90°F.
3. Do not install unit outdoors.
4. In garages or other sections of aircraft hangars such as offices and shops that communicate with areas used for servicing or storage, keep the bottom of the unit at least 7' above the floor unless the unit is properly guarded. In parking garages, the unit must be installed in accordance with the standard for parking structures ANSI/NFPA 88A - latest edition, and in repair garages the standard for repair garages NFPA 30A - latest edition (formerly NFPA 88B). In Canada, installation of heaters in airplane hangars must be in accordance with the requirements of the enforcing authority, and in public garages in accordance with the current CSA-B149 codes.
5. In aircraft hangars, keep the bottom of the unit at least 10' from the highest surface of the wings or engine enclosure of the highest aircraft housed in the hangars and in accordance with the requirements of the enforcing authority and/or NFPA 409 – latest edition.
6. Installation of units in high humidity or salt water atmospheres will cause accelerated corrosion resulting in a reduction of the normal life of the units.

IMPORTANT

To prevent premature heat exchanger failure, do not locate ANY gas-fired appliances in areas where corrosive vapors (i.e. chlorinated, halogenated or acidic) are present in the atmosphere.

Location Recommendations

1. When locating the heater, consider general space and heating requirements, availability of gas and electrical supply, and proximity to vent locations.
2. Avoid installing units in extremely drafty locations. Drafts can cause burner flames to impinge on heat exchangers which shortens life. Maintain separation between units so discharge from one unit will not be directed into the inlet of another.
3. Be sure the structural support at the unit location site is adequate to support the unit's weight. For proper operation the unit must be installed in a level horizontal position.
4. Do not install units in locations where the flue products can be drawn into the adjacent building openings such as windows, fresh air intakes, etc.
5. Be sure that the minimum clearances to combustible materials and recommended service clearances are maintained. Units are designed for installation on non-combustible surfaces with the minimum clearances shown in Figure 4.1 and Tables 4.1 and 4.2.
6. Units exposed to inlet air temperatures of 40°F or less, may experience condensation, therefore, provisions should be made for disposal of condensate.
7. When locating units, it is important to consider that the exhaust vent piping must be connected to the outside atmosphere.
8. Maximum equivalent vent lengths are listed in "Section A - General Instruction - All Units" of the Venting Instructions.
9. Do not install units in locations where gas ignition system is exposed to water spray, rain, or dripping water.
10. Do not install units below 7', measured from the bottom of the unit to the floor, unless properly guarded to provide protection from moving parts.

Figure 4.1 - Combustible Material and Service Clearances

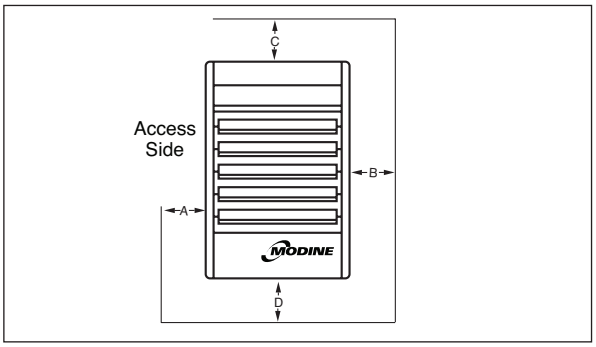

Table 4.1 - Combustible Material Clearances ①

Model Size	Access Side (A)	Non-Access Side (B)	Top (C)	Bottom (D)	Top of Power Exhauster (Not shown)
150-175	1"	1"	4"	12"	2"
200-400	1"	1"	5"	12"	3"

① Provide sufficient room around the heater to allow for proper combustion and operation of fan. Free area around the heater must not be less than 1-1/2 times the discharge area of the unit.

Table 4.2 - Recommended Service Clearances

Model Size	Access Side (A)	Non-Access Side (B)	Top (C)	Bottom (D)	Top of Power Exhauster (Not shown)
150-175	18"	18"	6"	22"	2"
200-400	18"	18"	6"	25"	3"

Combustion Air Requirements

The National Fuel Gas Code defines an “unconfined space” as a space whose volume is greater than 50 cubic feet per 1,000 Btu/Hr input of the installed appliance(s). A confined space is 50 cubic feet or less per 1,000 Btu/Hr input of the installed appliance(s).

Units installed in tightly sealed buildings or confined spaces must be provided with two permanent openings, one near the top of the confined space and one near the bottom. Each opening should have a free area of not less than one square inch per 1,000 BTU per hour of the total input rating off all units in the enclosure, freely communicating with interior areas having, in turn adequate infiltration from the outside.

For further details on supplying combustion air to a confined (tightly sealed) space or unconfined space, see the National Fuel Gas Code ANSI Z223.1 (NFPA 54) or CSA-B149.1 Installation Code - latest edition.

Sound and Vibration Levels

All standard mechanical equipment generates some sound and vibration that may require attenuation. Libraries, private offices and hospital facilities will require more attenuation, and in such cases, an acoustical consultant may be retained to assist in the application. Locating the equipment away from the critical area is desirable within ducting limitations. Generally, a unit should be located within 15' of a primary support beam. Smaller deflections typically result in reduced vibration and noise transmission.

INSTALLATION

UNIT MOUNTING

1. Be sure the means of suspension is adequate to support the weight of the unit (see pages 24 and 25 for unit weights).
2. For proper operation and to assure that flames are directed into the center of the heat exchanger tubes, the unit must be installed in a level horizontal position. Use a spirit level to ensure that the unit is suspended correctly.
3. Clearances to combustibles as specified in Figure 4.1 and Tables 4.1 and 4.2 must be strictly maintained.
4. All standard units are shipped fully boxed. Larger units are also supplied with skid supports on the bottom of the box. The larger units may be lifted from the bottom by means of a fork lift or other lifting device only if the shipping support skids are left in place and the forks support the whole depth of the unit. If the unit must be lifted from the bottom for final installation without the carton in place, be sure to properly support the unit over its entire length and width to prevent damage. When lifting units, make sure the load is balanced.
5. Propeller models up to size 350 have 2 mounting holes, size 350 and above have 4 mounting holes and blower models up to size 350 have 4 mounting holes, size 350 and above have 6 mounting holes. Units with two point suspension incorporate a level hanging feature. Depending on what options and accessories are being used, the heater may not hang level as recieved from the factory. Do not hang heaters with deflector hoods until referring to the “Installation Manual for Deflector Hoods” and making the recommended preliminary adjustments on the heater, while the heater is resting on the floor. The units can be mounted with 3/8"-16 threaded rod as follows:
   - On each piece of threaded rod used, screw a nut a distance of about 1" onto the end of the threaded rods that will be screwed into the unit heater.
   - Place a washer over the end of the threaded rod and screw the threaded rod into the unit heater weld nuts on the top of the heater at least 5 turns, and no more than 10 turns. Tighten the nut first installed onto the threaded rod to prevent the rod from turning.
   - Drill holes into a steel channel or angle iron at the same center-line dimensions as the heater that is being installed. The steel channels or angle iron pieces need to span and be fastened to appropriate structural members.
   - Cut the threaded rods to the preferred length, place them through the holes in the steel channel or angle iron and secure with washers and lock nuts or lock washers and nuts. A double nut arrangement can be used here instead of at the unit heater (a double nut can be used both places but is not necessary).
   - Do not install standard unit heaters above the maximum mounting height shown in Table 19.1.

   NOTE: A pipe hanger adapter kit, shown in Figure 5.2 is available as an accessory. One kit consists of two drilled 3/4" IPS pipe caps and two 3/8" - 16 x 1-3/4" capscrews to facilitate threaded pipe suspension. Two kits would be required for PDP unit sizes 350 and 400 and all BDP units except size 350 and 400, and 3 kits for BDP unit sizes 350 and 400.

Figure 5.1 - Adjustable Mounting Brackets - To Adjust:

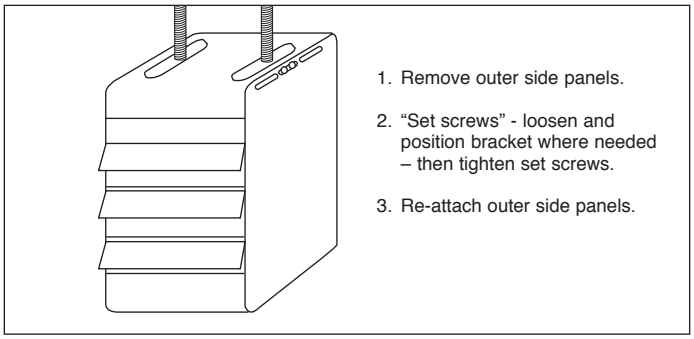

Figure 5.2 - Suspension Methods

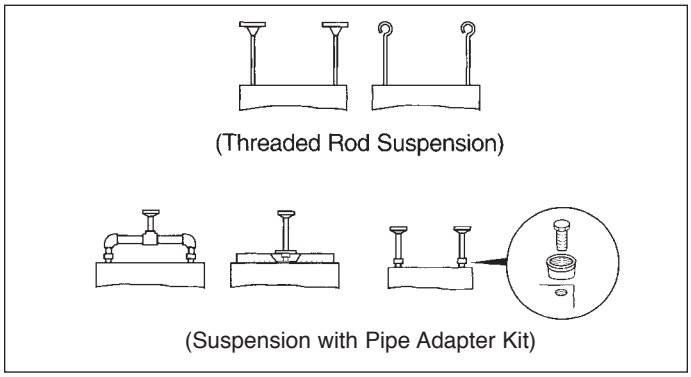

⚠ WARNING

1. Gas fired heating equipment must be vented - do not operate unvented.
2. A built-in power exhauster is provided - additional external power exhausters are not required or permitted.
3. If an existing heater is being replaced, it may be necessary to resize the venting systems. Improperly sized venting systems can result in vent gas leakage or the formation of condensate. Refer to the National Fuel Gas Code ANSI Z223.1 (NFPA 54) or CSA B149.1 - latest edition. Failure to follow these instructions can result in serious injury or death.
4. Under no circumstances should two sections of double wall vent pipe be joined together within one horizontal vent system due to the inability to verify complete seal of inner pipes.

⚠ CAUTION

Installation must conform with local building codes or in the absence of local codes, with the National Fuel Gas Code, ANSI Z223.1 (NFPA 54) - latest edition. In Canada installation must be in accordance with CSA B149.1.

Model PDP and BDP unit heaters must be vented with the proper passageway as described in these instructions to convey flue gases from the unit or the vent connector to the outside atmosphere.

The venting instructions are organized in sections, based on installation type. The sections are identified as follows:

Instructions	Applicable Installation Instructions by Vent System Type
A	General Instructions for **ALL** Installations
B	**VERTICAL CATEGORY I** vent systems ①
C	**HORIZONTAL CATEGORY III** vent systems ①

① The differences between vertical and horizontal vent systems will be identified in "Section A - General Instructions - All Units".

Section A - General Instructions - All Units

A1. If the unit heater being installed is replacing existing equipment and using the existing vent system from that equipment, inspect the venting system for proper size and horizontal pitch, as required in the National Fuel Gas Code, ANSI Z223.1 (NFPA 54) or CSA B149.1 Installation Code - latest edition and these instructions. Determine that there is no blockage or restriction, leakage, corrosion and other deficiencies, which could cause an unsafe condition.

A2. The vent pipe should be galvanized steel or other suitable corrosion resistant material. Follow the National Fuel Gas Code for minimum thickness of vent material. The minimum thickness for connectors varies depending on the pipe diameter. Do not vent unit with PVC or other forms of plastic venting material.

A3. All heaters come with a vent adapter for attaching the vent pipe to the heater (see Table 6.1). Attach the vent pipe to the adapter with 3 corrosion resistant screws. (Drill pilot holes through the vent pipe and adapter prior to screwing in place). Vent pipe must not be smaller than the connector size.

A4. Limit the total equivalent vent pipe length to fall between the minimum and maximum equivalent vent lengths given in Table 6.1, making the vent system as straight as possible. The equivalent length of a 5" elbow is 6' and for a 6" elbow is 7'.

A5. A minimum of 12" straight pipe is recommended from the flue outlet before turns in the vent pipe.

A6. Horizontal sections of vent pipe are to be installed with a minimum downward slope from the appliance of 1/4" per foot and suspended securely from overhead structures at points not greater than 3' apart.

A7. Fasten individual lengths of vent together with at least 3 corrosion resistant sheet metal screws.

A8. Keep single wall vent pipe at least 6" from combustible materials. For double wall vent pipe, follow the vent pipe manufacturer's clearances to combustibles. The minimum distance from combustible materials is based on the combustible material surface not exceeding 160°F. Clearance from the vent pipe (or the top of the unit) may be required to be greater than 6" if heat damage other than fire could result (such as material distortion or discoloration).

A9. Avoid venting through unheated space when possible. When venting does pass through an unheated space or if the unit is installed in an environment that promotes condensation, insulate runs greater than 5' to minimize condensation. Inspect for leakage prior to insulating and use insulation that is noncombustible with a rating of not less than 400°F. Install a tee fitting at the low point of the vent system and provide a drip leg with a clean out cap as shown in Figure 8.1.

Table 6.1 - Vent Pipe Diameters, Transitions, and Total Equivalent Vent Pipe Lengths for Horizontal Vent Systems

Model Size	Vent Transition Included	Vent Pipe Diameter	Minimum Eqv Length	Maximum Eqv Length
150, 175	4" to 5"	5"	2'	60'
200	6" to 5"	5"	2'	60'
250-400	Not required	6"	2'	70'

Figure 6.1 - Venting Through Combustible Roof or Wall

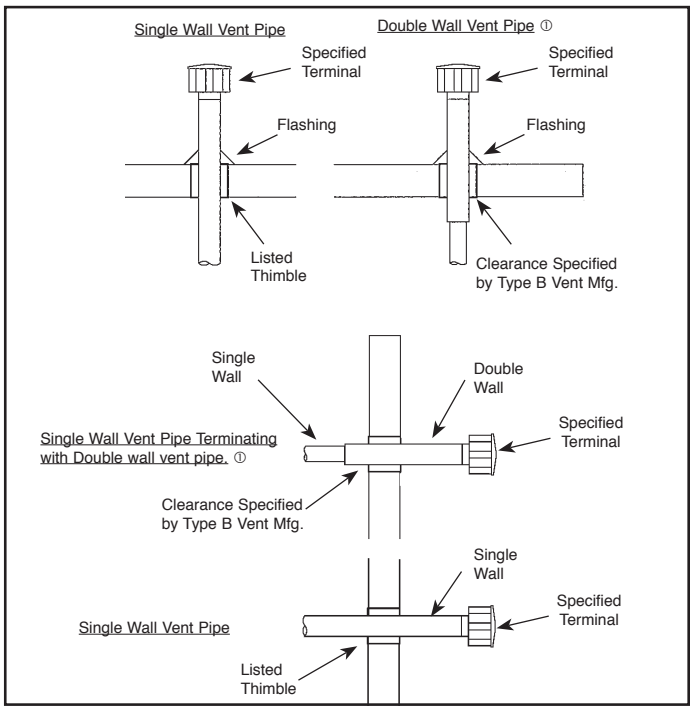

① See Instruction A12 for attaching single wall pipe to double wall pipe.

A10. When the vent passes through a combustible INTERIOR wall or floor, a metal thimble 4" greater than the vent diameter is necessary. If there is 6' or more of vent pipe in the open space between the appliance and where the vent pipe passes through the wall or floor, the thimble need only be 2" greater than the diameter of the vent pipe. If a thimble is not used, all combustible material must be cut away to provide 6" of clearance. Where authorities have jurisdiction, Type B vent may be used for the last section of vent pipe to maintain clearance to combustibles while passing through wall or floor. See Figure 6.1. Any material used to close the opening must be noncombustible.

A11. All seams and joints of the single wall pipe must be sealed with metallic tape or silastic suitable for temperatures up to 400°F. Wrap the tape 2 full turns around the vent pipe. One continuous section of double wall vent pipe may be used within the vent system to pass through the wall to the listed vent cap. Refer to instruction A12 in "Section A – General Instructions – All Units" for attaching double wall pipe to single wall pipe.

A12. The following are general instructions for double wall (Type B) terminal pipe installation:

How to attach a single wall vent terminal to double wall (Type B) vent pipe:

1. Look for the "flow" arrow on the vent pipe.
2. Slide the vent terminal inside the exhaust end of the double wall vent pipe.
3. Drill 3 holes through the pipe and the vent terminal. Using 3/4" long sheet metal screws, attach the cap to the pipe. Do not over tighten.

How to connect a single wall vent system to a double wall (Type B) vent pipe:

1. Slide the single wall pipe inside the inner wall of the double wall pipe.
2. Drill 3 holes through both walls of the single and double wall vent pipes. Using 3/4" sheet metal screws, attach the 2 pieces of pipe. Do not over tighten.
3. The gap between the single and double wall pipe must be sealed but it is not necessary to fill the full volume of the annular area. To seal, run a large bead of 400°F silastic around the gap.

A13. Vent termination clearances must be maintained:

Table 7.1 - Vent Termination Clearances

Structure	Minimum Clearances for Vent Terminal Location
Forced air inlet within 10'	3' above
Combustion air inlet of another appliance	6' all directions
Door, window, gravity air inlet, or any building opening	4' horizontal and below 1' above
Electric meter, gas meter, gas regulator, and relief equipment ①	4' horizontal (U.S.) 6' horizontal (Canada)
Gas regulator ①	3' horizontal (U.S.) 6' horizontal (Canada)
Adjoining building or parapet wall	6' all directions
Adjacent public walkways	7' all directions
Grade (ground level)	3' above

① Do not terminate the vent directly above a gas meter or regulator.

A14. Do NOT vent this appliance into a masonry chimney.

A15. Do NOT use dampers or other devices in the vent or combustion air pipes.

A16. The venting system must be exclusive to a single appliance and no other appliance is allowed to be vented into it.

A17. Precautions must be taken to prevent degradation of building materials by flue products.

A18. Single wall vent pipe must not pass through any unoccupied attic, inside wall, concealed space, or floor.

A19. Uninsulated single wall vent pipe must not be used outdoors for venting appliances in regions where the 99% winter design temperature is below 32°F.

A20. The vent terminal must be:

Table 7.2 - Vent Terminals

Model Size	Modine PN	Other Listed Terminals
150-200	5H0722850001	Gary Steel 1092, Tjernlund VH1, Starkap, Selkirk, or Constant Air-Flo 2433 style
250-400	5H0722850002	

A21. If left hand (facing front of heater with air blowing in face) power exhauster discharge is desired, the power exhauster may be rotated 180°. To do this, remove the screws in the vent collar, rotate the power exhauster, then replace the screws.

A22. In addition to following these general instructions, specific instructions for Vertical Category I or Horizontal Category III vent systems must also be followed. The following outlines the differences:

Table 7.3 - ANSI Unit Heater Venting Requirements

Category	Description	Venting Requirements
I	Negative vent pressure Non-condensing	Follow standard venting requirements.
II	Negative vent pressure Condensing	Condensate must be drained.
III	Positive vent pressure Non-condensing	Vent must be gas tight.
IV	Positive vent pressure Condensing	Vent must be liquid and gas tight. Condensate must be drained.

Note: Vent connectors serving Category I appliances shall not be connected into any portion of mechanical draft systems operating under positive pressure.

Vertical Category I Vent

- Vertical vent systems terminate vertically (up) (an example is shown in Figure 8.1).
- The horizontal portion of the vent run cannot exceed 75% of the vertical rise (Example: If the vent height is 10', the horizontal portion of the vent system cannot exceed 7.5').
- The vent terminates a minimum of 5' above the vent connector on the unit.
- If the vent system to be installed meets ALL these criteria (an example is shown in Figure 8.1), proceed to "Section B - Vertical Vent System Installation". For all other cases, proceed to the next section for Horizontal Category III Vent System Determination:

Horizontal Category III Vent

- Horizontal vent systems terminate horizontally (sideways) (an example is shown in Figure 9.2).
- A vent system that terminates vertically but has a horizontal run that exceeds 75% of the vertical rise is considered horizontal.
- Horizontal vent configurations are Category III. Additional requirements are covered in "Section C - Horizontal Category III Vent System Installation".

INSTALLATION - VENTING

Section B – Vertical Vent System Installation

B1. This section applies to vertically vented Category I vent systems and is in addition to “Section A – General Instructions – All Units”.

B2. Vertical vent systems terminate vertically and must be sized in accordance with the National Fuel Gas Code, ANSI Z223.1 (NFPA 54) - latest edition.

B3. The horizontal portion of the vent run cannot exceed 75% of the vertical rise (Example: If the vent height is 10', the horizontal portion of the vent system cannot exceed 7.5').

B4. It is recommended to install a tee with drip leg and clean out cap as shown in Figure 8.1.

B5. The vent terminates a minimum of 5' above the vent connector on the unit.

B6. All vertically vented heaters that are Category I must be connected to a vent complying with a recognized standard, with a material acceptable to the authority having jurisdiction. Venting into a masonry chimney is not permitted. Refer to the National Fuel Gas Code, ANSI Z223.1 (NFPA 54) - latest edition for instructions on common venting.

B7. Use a listed vent terminal to reduce down drafts and moisture in the vent.

B8. Double wall vent pipe is recommended, although single wall can be used if the requirements of the National Fuel Gas Code are followed.

B9. Vertical vents must terminate a minimum horizontal and vertical distance from roof lines and adjacent walls or obstructions. These minimum distances are outlined as follows (based on National Fuel Gas Code requirements for vents with diameters less than 12"):

- For **double wall** vent pipe and **8' or greater** horizontal distance to any vertical wall or similar obstruction, the vent must terminate above the roof in accordance with Figure 8.1 and Table 8.1.
- For **double wall** vent pipe and **less than 8'** horizontal distance to any vertical wall or similar obstruction, the vent must terminate at least 2' above the highest point where it passes through a roof of a building and at least 2' higher than any portion of a building within a horizontal distance of 10' (see Figure 8.1).

Table 8.1 - Minimum Height from Roof to Lowest Discharge Opening

Rise X (in)	Roof Pitch	Min Height H (ft) ①
0-6	Flat to 6/12	1.00
6-7	6/12 to 7/12	1.25
7-8	7/12 to 8/12	1.50
8-9	8/12 to 9/12	2.00
9-10	9/12 to 10/12	2.50
10-11	10/12 to 11/12	3.25
11-12	11/12 to 12/12	4.00
12-14	12/12 to 14/12	5.00
14-16	14/12 to 16/12	6.00
16-18	16/12 to 18/12	7.00
18-20	18/12 to 20/12	7.50
20-21	20/12 to 21/12	8.00

① Size according to expected snow depth.

- For **single wall** vent pipe and 10' or greater horizontal distance to any portion of a building, the vent must terminate at least 2' above the highest point where it passes through a roof of a building and at least 2' higher than any portion of a building within a horizontal distance of 10'.
- For **single wall** vent pipe and less than 10' horizontal distance to any portion of a building, the vent must terminate at least 2' higher than any portion of that building.

Figure 8.1 - Vertical Category I Vent System

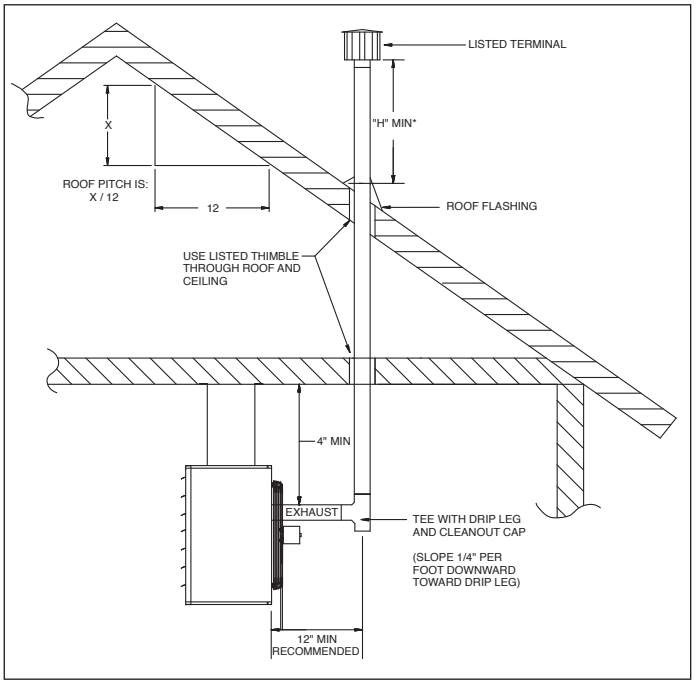

INSTALLATION - VENTING

Section C – Horizontal, Category III Vent System Installation

C1. This section applies to horizontally vented Category III vent systems and is in addition to “Section A – General Instructions – All Units”.

C2. Horizontal vent systems terminate horizontally (sideways).

C3. All seams and joints must be sealed with metallic tape or silastic suitable for temperatures up to 400°F. Wrap the tape 2 full turns around the vent pipe. For single wall vent systems, 1 continuous section of double wall vent pipe may be used within the vent system to pass through the wall to the listed vent cap. Under no circumstances should 2 sections of double wall vent pipe be joined together within 1 vent system due to the inability to verify complete seal of inner pipes. Refer to instruction A10 in “Section A – General Instructions – All Units” for attaching double wall pipe to single wall pipe.

C4. Refer to Table 9.1 for total minimum and maximum vent lengths, making the system as straight as possible. The equivalent length of a 90° elbow is 6' for 5" diameter and 7' for 6" diameter.

C5. All horizontal Category III vents must be terminated with a listed vent cap. The cap must terminate a minimum distance beyond the exterior wall surface as shown in Figure 9.2 and Table 9.1. The vent must be supported as shown in Figure 9.1. Precautions must be taken to prevent degradation of building materials by flue products.

Table 9.1 - Dimension Between Vent Cap and Exterior Wall

Vent Terminal	“A” Min.
Selkirk, Starkap, or Constant Air-Flo 2433	12"
Gary Metals 1092 or Modine 5H072285	6"
Tjernlund VH1	0"

Figure 9.1 - Exhaust Vent Construction Through Combustible Walls and Support Bracket

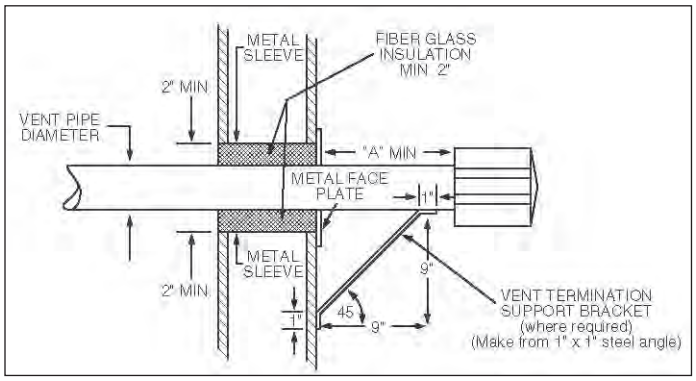

C6. When condensation may be a problem, the vent system shall not terminate over public walkways or over an area where condensate or vapor could create a nuisance or hazard or could be detrimental to the operation of regulators, relief openings, or other equipment.

C7. The venting system must be exclusive to a single unit, and no other unit is allowed to be vented into it.

C8. When vented horizontally, maintain a 1/4" per foot rise away from the heater and place a drip leg with clean out near the unit as shown in Figure 9.2. Where local authorities have jurisdiction, a 1/4” per foot downward slope is acceptable with a drip leg and clean out near the exit of the vent as shown in Figure 9.2, or allow the condensate to drip out the end.

Figure 9.2 - Horizontal Venting

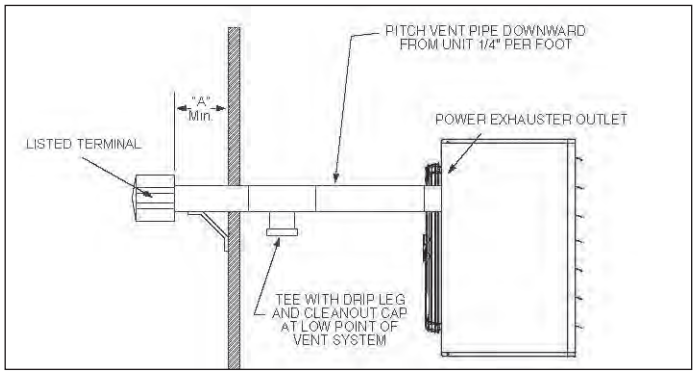

C9. For a vent termination located under an eave, the distance of the overhang must not exceed 24". The clearance to combustibles above the exterior vent must be maintained at a minimum of 12". Consult the National Fuel Gas Code for additional requirements for eaves that have ventilation openings.

C10. Once venting is complete, proceed to the section titled “Installation – Gas Connections”.

GAS CONNECTIONS

⚠ WARNING

1. All field gas piping must be pressure/leak tested prior to operation. Never use an open flame. Use a soap solution or equivalent for testing.
2. Gas pressure to appliance controls must never exceed 14" W.C. (1/2 psi).
3. To reduce the opportunity for condensation, the minimum sea level input to the appliance, as indicated on the serial plate, must not be less than 5% below the rated input, or 5% below the minimum rated input of dual rated units.

⚠ CAUTION

1. Purging of air from gas lines should be performed as described in the National Fuel Gas Code, ANSI Z223.1 (NFPA 54) - latest edition or in Canada CSA-B149 codes.
2. When leak testing the gas supply piping system, the appliance and its combination gas control must be isolated during any pressure testing in excess of 14" W.C. (1/2 psi).
3. The unit should be isolated from the gas supply piping system by closing its field installed manual shut-off valve. This manual shut-off valve should be located within 6' of the heater.
4. Turn off all gas before installing appliance.

IMPORTANT

To prevent premature heat exchanger failure, the input to the appliance, as indicated on the serial plate, must not exceed the rated input by more than 5%.

1. Installation of piping must conform with local building codes, or in the absence of local codes, with the National Fuel Gas Code, ANSI Z223.1 (NFPA 54) - Latest Edition. In Canada, installation must be in accordance with CSA-B149.1.
2. Piping to units should conform with local and national requirements for type and volume of gas handled, and pressure drop allowed in the line. Refer to Table 10.1 to determine the cubic feet per hour (cfh) for the type of gas and size of unit to be installed. Using this cfh value and the length of pipe necessary, determine the pipe diameter from Table 10.2. Where several units are served by the same main, the total capacity, cfh and length of main must be considered. Avoid pipe sizes smaller than 1/2". Table 10.1 allows for a 0.3" W.C. pressure drop in the supply pressure from the building main to the unit. The inlet pressure to the unit must be 6-7" W.C. for natural gas and 11-14" W.C. for propane gas. When sizing the inlet gas pipe diameter, make sure that the unit supply pressure can be met after the 0.3" W.C. has been subtracted. If the 0.3" W.C. pressure drop is too high, refer to the Gas Engineer's Handbook for other gas pipe capacities.
3. Install a ground joint union with brass seat and a manual shut-off valve adjacent to the unit for emergency shut-off and easy servicing of controls, including a 1/8" NPT plugged tapping accessible for test gauge connection (see Figure 10.1).
4. Use 2 wrenches when connecting field piping to units.
5. Provide a sediment trap before each unit and in the line where low spots cannot be avoided (see Figure 10.1).
6. When pressure/leak testing, pressures above 14" W.C. (1/2 psi), close the field installed shut-off valve, disconnect the appliance and its combination gas control from the gas supply line, and plug the supply line before testing. When testing pressures 14" W.C. (1/2 psi) or below, close the manual shut-off valve on the appliance before testing.

Figure 10.1 - Recommended Sediment Trap/Manual Shut-off Valve Installation for Gas Connection

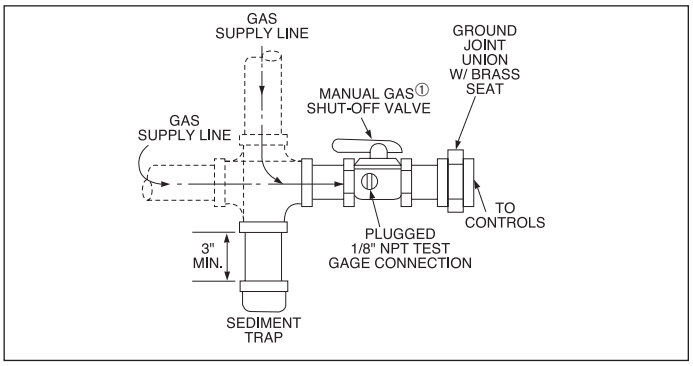

① Manual shut-off valve is in the "OFF" position when handle is perpendicular to pipe.

Table 10.1 - Sea Level Manifold Pressure & Gas Consumption ①

Model Size	Manifold Pressure ("W.C.)	Natural	Propane	
		3.5	10	# of Orifices
150	CFH	138.1	58.0	2
	Gal/Hr. Propane	-	1.64	
	Orifice Drill Size	21	39	
175	CFH	166.7	70.0	3
	Gal/Hr. Propane	-	1.86	
	Orifice Drill Size	28	43	
200	CFH	190.5	80.0	3
	Gal/Hr. Propane	-	2.19	
	Orifice Drill Size	25	42	
250	CFH	238.1	100.0	3
	Gal/Hr. Propane	-	2.74	
	Orifice Drill Size	18	36	
300	CFH	285.7	120.0	4
	Gal/Hr. Propane	-	3.29	
	Orifice Drill Size	21	39	
350	CFH	333.3	140.0	5
	Gal/Hr. Propane	-	3.84	
	Orifice Drill Size	23	41	
400	CFH	381.0	160.0	6
	Gal/Hr. Propane	-	4.38	
	Orifice Drill Size	25	42	

Table 10.2 - Gas Pipe Capacities - Natural Gas ① ②

Pipe Length (ft)	Natural Gas					
	1/2"	3/4"	1"	1-1/4"	1-1/2"	2"
10	132	278	520	1050	1600	3050
20	92	190	350	730	1100	2100
30	73	152	285	590	890	1650
40	63	130	245	500	760	1450
50	56	115	215	440	670	1270
60	50	105	195	400	610	1150
70	46	96	180	370	560	1050
80	43	90	170	350	530	930
100	38	79	150	305	460	870
125	34	72	130	275	410	780
150	31	64	120	250	380	710

① Capacities in cubic feet per hour through Schedule 40 pipe with maximum 0.3" W.C. pressure drop with up to 14" W.C. gas pressure. Specific gravity is 0.60 for natural gas and 1.50 for propane gas.

② For pipe capacity with propane gas, divide natural gas capacity by 1.6. Example: What is the propane gas pipe capacity for 60' of 1-1/4" pipe? The natural gas capacity is 400 CFH. Divide by 1.6 to get 250 CFH for propane gas.

INSTALLATION - HIGH ALTITUDE ACCESSORY KIT

HIGH ALTITUDE ACCESSORY KIT

Modine's gas-fired equipment standard input ratings are certified by ETL. For elevations above 2,000', ANSI Z223.1 requires ratings be reduced 4 percent for each 1000' above sea level. For units in Canada, CSA requires that ratings be reduced 10 percent at elevations above 2,000'. The high altitude adjustment instructions and pressure switch kits listed in this manual are for use with units that will be installed over 2,000' These methods and kits comply with both ANSI Z223.1 and CSA requirements.

If a unit is to be installed at higher elevations AND converted from natural gas to propane gas operation, a propane conversion kit must be used in conjunction with the pressure adjustment methods and pressure switch kits listed herein. For the Selection and Installation Instructions for propane conversion kits, please see the latest revision of Modine Manual 75-511.

Selection of the Proper Pressure and Kit

To determine the proper manifold pressure at altitude and if required, the proper combustion air pressure switch kit, the full model number of the heater, the fuel to be used, and the altitude the unit will be installed at must be known. Refer to the unit serial plate or carton label to obtain the necessary information about the unit.

After obtaining this information, refer to the gas pressure and selection charts shown in Tables 11.1 through 11.3. The pressure charts are differentiated by elevation, fuel type, and country the product is being installed in. The selection charts are differentiated by product type, altitude and fuel type. **If converting from natural gas to propane gas and operation at high altitude, both a propane conversion kit and a pressure switch kit must be used (if applicable).** Selection charts include the proper kit suffix, when required.

Manifold Pressure Adjustment

The inlet pressure to the unit must be confirmed to be within acceptable limits (6-7" W.C. for natural gas and 11-14" W.C. for propane gas) before opening the shutoff valve or the combination gas valve may be damaged.

Heaters for use with **natural gas** have gas valves factory set at 3.5" W.C. manifold pressure at 7.0" W.C. inlet pressure.

Units for use with **propane gas** are set for 10.0" W.C. manifold pressure at 14.0" W.C. inlet pressure.

Installation above 2,000'. elevation requires adjustment of the manifold pressure as described.

Derated BTU Content Gas and Manifold Pressure Calculation

Some utility companies may derate the BTU content (heating value) of the gas provided at altitude to a value other than 1,050 BTU/ft^3 for natural gas or 2,500 BTU/ft^3 for propane gas to allow certain heating appliances to be used with no manifold pressure adjustments. For this reason it is necessary that the supplying utility be contacted for detailed information about the gas type and BTU content (heating value) before operating any heater. Tables 11.1 and 11.2 show the standard derated heating values (4% per 1,000' of elevation in the USA and 10% between 2,001' and 4,500' elevation in Canada) of natural and propane gases at various altitudes. If the utility is supplying gas with heating values as shown in Tables 11.1 and 11.2, the manifold pressure should be set to 3.5" W.C for natural gas and 10.0" W.C. for propane gas.

NOTE: Only the high fire gas pressure need be adjusted, low fire gas pressure should remain the same.

Table 11.1 - Natural Gas Heating Values at Altitude ① ③ ④

Altitude (ft)	Gas Heating Values at Altitude (BTU/ft^3)	
	USA	Canada
0-2,000	1,050	1,050
2,001-3,000	929	945
3,001-4,000	892	
4,001-4,500	874	
4,501-5,000	856	856
5,001-6,000	822	822
6,001-7,000	789	789
7,001-8,000	757	757
8,001-9,000	727	727
9,001-10,000	698	698

Table 11.2 - Propane Gas Heating Values at Altitude ② ③ ④

Altitude (ft)	Gas Heating Values at Altitude (BTU/ft^3)	
	USA	Canada
0-2,000	2,500	2,500
2,001-3,000	2,212	2,250
3,001-4,000	2,123	
4,001-4,500	2,080	
4,501-5,000	2,038	2,038
5,001-6,000	1,957	1,957
6,001-7,000	1,879	1,879
7,001-8,000	1,803	1,803
8,001-9,000	1,731	1,731
9,001-10,000	1,662	1,662

① Values shown are for 3.5" W.C. manifold pressure, for other BTU content values (available from local utility) use Equation 12.1 to calculate manifold pressure.
② Values shown are for 10.0" W.C. manifold pressure, for other BTU content values (available from local utility) use Equation 12.1 to calculate manifold pressure.
③ When installed at altitudes above 2,000', a pressure switch may need to be changed. Refer to Table 11.3 to determine if a switch change is required.
④ Gas heating values are derated 4% per 1,000' of elevation in the USA and 10% between 2,000' and 4,500' elevation in Canada in accordance with ANSI Z223.1 and CSA-B149, respectively.

Table 11.3 - High Altitude Kits for PDP/BDP ①

Model Size	Details	U.S.A. and Canada				
		0-2,000 ft	2,001-4,500 ft	4,501-5,500 ft	5,501-6,500 ft	6,501-7,500 ft
150-400	Kit Suffix Item Code	Not required	Label only	Label only	Label only	Label only

① For Label Only kits, Modine part number 5H0807146005 is required to be filled out and attached to the unit by the installer. Please contact the local Modine representative at 1.866.828.4328 (HEAT).

INSTALLATION - HIGH ALTITUDE ACCESSORY KIT

If the heating value of the gas being supplied is different than the values shown in Tables 11.1 and 11.2, use the following equation to determine the appropriate manifold pressure for the altitude and gas heating value being supplied.

Equation 12.1 - Manifold Pressure for Derated Gas

$$MP_{ACT} = \left(\frac{BTU_{TBL}}{BTU_{ACT}}\right)^2 \times MP_{SL}$$

WHERE:

MP_{ACT} = **Manifold Pressure (in. W.C.) at Altitude** – Manifold pressure setting for the heater being installed

BTU_{TBL} = **BTU/ft^3 Content of Gas** – Obtained from Tables 11.1 or 11.2 (whichever is applicable)

BTU_{ACT} = **BTU/ft^3 Content of Gas** – Obtained from the local utility company

MP_{SL} = **Manifold Pressure (in. W.C.), at Sea Level** – Use 3.5" W.C. for natural gas and 10.0" W.C. for propane gas

NOTE: Only the primary manifold pressure should be adjusted on units equipped with 2-stage or modulating gas controls. No adjustments to the low fire manifold pressure are necessary on these units.

INSTALLATION

ELECTRICAL CONNECTIONS

⚠ WARNING

1. Disconnect power supply before making wiring connections to prevent electrical shock and equipment damage.
2. All appliances must be wired strictly in accordance with wiring diagram furnished with the appliance. Any wiring different from the wiring diagram could result in a hazard to persons and property.
3. Any original factory wiring that requires replacement must be replaced with wiring material having a temperature rating of at least 105°C.
4. Ensure that the supply voltage to the appliance, as indicated on the serial plate, is not 5% greater than rated voltage.

⚠ CAUTION

Ensure that the supply voltage to the appliance, as indicated on the serial plate, is not 5% less than the rated voltage.

1. Installation of wiring must conform with local building codes, or in the absence of local codes, with the National Electric Code ANSI/NFPA 70 - Latest Edition. Unit must be electrically grounded in conformance to this code. In Canada, wiring must comply with CSA C22.1, Part 1, Electrical Code.
2. Two copies of the unit wiring diagram are provided with each unit. One is located in the electrical junction box and the other is suppled in the literature packet. Refer to this diagram for all wiring connections.
3. Make sure all multi-voltage components (motors, transformers, etc.) are wired in accordance with the power supply voltage.
4. The power supply to the unit must be protected with a fused or circuit breaker switch.
5. The power supply must be within 10 percent of the voltage rating and each phase must be balanced within 2 percent of each other. If not, advise the utility company.
6. External electrical service connections that must be installed include:
   a. Supply power connection (120, 208, 240, 480, or 575 volts).
   b. Thermostats, summer/winter switches, or other accessory control devices that may be supplied (24 volts).

NOTE: Certain units will require the use of a field step-down transformer. Refer to the serial plate to determine the unit supply voltage required. Additional information may be found in Tables 19.2 and 19.3 and in the step down transformer installation instructions.

7. Refer to Figure 18.1 for the electrical junction box locations.
8. All supply power electrical connections are made in the electrical junction box of the unit. The low voltage (thermostat and accessory control devices) can be wired to the terminals on the electrical junction box. Refer to the wiring diagram for the terminal location of all low voltage wiring.

DUCT INSTALLATION

IMPORTANT

Do not attempt to attach ductwork of any kind to propeller models.

When installing the heater, always follow good duct design practices for even distribution of the air across the heat exchanger. Recommended layouts are shown in Figure 13.1. When installing blower units with ductwork the following must be done.

1. **Provide uniform air distribution over the heat exchanger.** Use turning vanes where required (see Figure 13.1).
2. Provide removable access panels in the ductwork on the downstream side of the unit heater. These openings should be large enough to view smoke or reflect light inside the casing to indicate leaks in the heat exchanger and to check for hot spots on exchanger due to poor air distribution or lack of sufficient air.
3. If ductwork is connected to the rear of the unit use a Modine blower enclosure kit or if using a field designed enclosure maintain dimensions of the blower enclosure as shown on page 25.

Figure 13.1 - Recommended Ductwork Installations

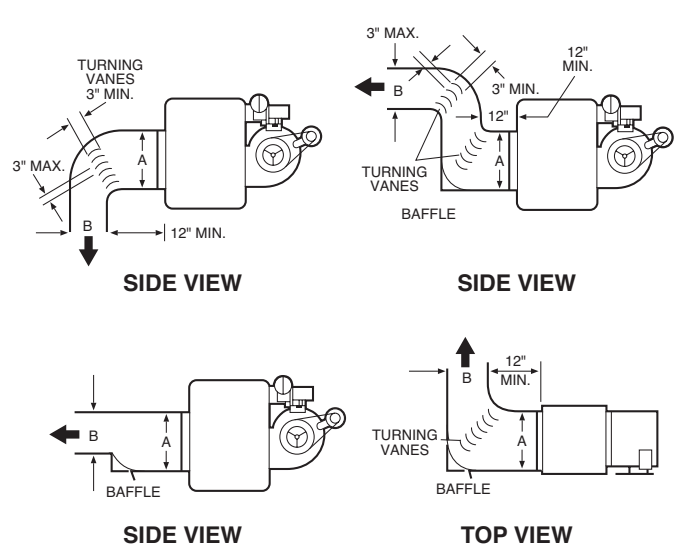

Dimension “B” Should Never Be Less than 1/2 of “A”

Additional Requirements for Blower Model BDP

Determining Blower Speed

The drive assembly and motor on all blower units are factory assembled and adjusted for operation under average conditions of air flow and without any external static pressure. The motor sheave should be adjusted as required when the unit is to be operated at other than average air flows and/or with external static pressures. Adjustment must always be within the performance range shown on page 20 and the temperature rise range shown on the unit’s rating plate.

To determine the proper blower speed and motor sheave turns open, the operating conditions must be known. For example, a model BDP350 unit, operating with no external static pressure, (e.g. no ductwork, nozzles, etc.) is to deliver an air volume of 6481 cfm (cfm = cubic feet per minute). This requires the unit be supplied with a 5 hp motor, a -207 drive, and the drive sheave set at 2.5 turns open to achieve a blower speed of 960

rpm (see performance table for units with or without blower enclosure, page 20). See “Blower Adjustments” for setting of drive pulley turns open.

If a blower unit is to be used with ductwork or nozzles, etc., the total external static pressure under which the unit is to operate, and the required air flow must be known before the unit can be properly adjusted. Any device added externally to the unit, and which the air must pass through, causes a resistance to air flow called pressure loss.

If Modine filters are used, the pressure loss through the filters is included in the performance data on page 20. If Modine supplied discharge nozzles are used, the pressure drop of the nozzles can be found footnoted at the bottom of page 23. If filters, nozzles or ductwork are to be used with the unit, and they are not supplied by Modine, the design engineer or installing contractor must determine the pressure loss for the externally added devices or ductwork to arrive at the total external static pressure under which the unit is to operate.

Once the total static pressure and the required air flow are known, the operating speed of the blower can be determined and the correct motor sheave adjustments made. As an example, a model BDP350 is to be used with a Modine supplied blower enclosure and filters attached to ductwork by others. The unit is to move 6481 cfm of air flow against an external static pressure of 0.2" W.C, which must be added for the filter pressure drop for a total of 0.4" W.C. total pressure drop. The performance table on page 20 for a BDP350, at 6481 cfm and 0.4" W.C. static pressure, shows that the unit will require a 5 hp motor using a -207 drive, and the motor sheave should be set at .5 turns open to achieve a blower speed of 1050 rpm.

To Install

1. Remove and discard the motor tie down strap and the shipping block beneath the belt tension adjusting screw (Not used on all models.)
2. For 3 and 5 HP motors, affix sheave to the motor shaft and install motor on the motor mounting bracket. Install belt on blower and motor sheaves.

Figure 14.1 - Blower Model

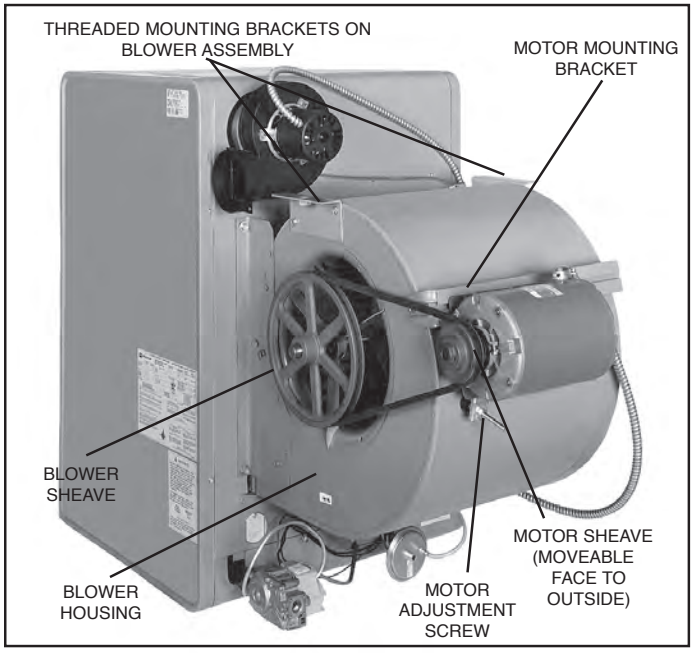

3. Adjust motor adjusting screw for a belt deflection of approximately 3/4" with five pounds of force applied midway between the sheaves (see Figure 14.3). Since the belt tension will decrease dramatically after an initial run-in period, it is necessary to periodically re-check the tension. Excessive tension will cause bearing wear and noise.
4. The blower bearings are lubricated for life; however, before initial unit operation the blower shaft should be lubricated at the bearings with SAE 20 oil. This will reduce initial friction and start the plastic lubricant flowing.
5. Make electrical connections as outlined in the section “Electrical Connections” on page 13.

Blower Adjustments

Following electrical connections, check blower rotation to assure blow-through heating. If necessary interchange wiring to reverse blower rotation. Start fan motor and check blower sheave RPM with a hand-held or strobe-type tachometer. RPM should check out with the speeds listed in “Performance Data” shown on page 20. A single-speed motor with an adjustable motor sheave is supplied with these units. If blower fan speed changes are required, adjust motor sheave as follows:

NOTE: Do not fire unit until blower adjustment has been made or unit may cycle on limit (overheat) control.

1. **Shut-off power before making blower speed adjustments.** Refer to “Determining Blower Speed” on page 13 and to “Performance Data” on page 20 to determine proper blower RPM.
2. Loosen belt and remove from motor sheave.
3. Loosen set screw on outer side of adjustable motor sheave (see Figure 14.2).
4. To reduce the speed of the blower, turn outer side of motor sheave counterclockwise.
5. To increase the speed of the blower, turn outer side of motor sheave clockwise.
6. Retighten motor sheave set screw, replace belt and retighten motor base. Adjust motor adjusting screw such that there is 3/4" belt deflection when pressed with 5 pounds of force midway between the blower and motor sheaves (see Figure 14.3). Since the belt tension will decrease dramatically after an initial run-in period, it is necessary to periodically re-check the tension to assure proper belt adjustment.
7. Check to make certain motor sheave and blower sheave are aligned. Re-align if necessary.
8. Re-check blower speed after adjustment.
9. Check motor amps. Do not exceed amps shown on motor nameplate. Slow blower if necessary.
10. Check air temperature rise across unit. Check temperature rise against values shown in Performance Tables on page 20 to assure actual desired air flow is being achieved.
11. If adjustments are required, recheck motor amps after final blower speed adjustment.

Figure 14.2 - Motor Sheave Adjustment

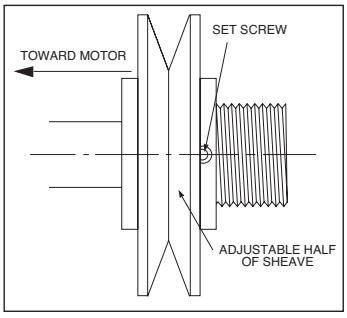

Figure 14.3 - Belt Tension Adjustment

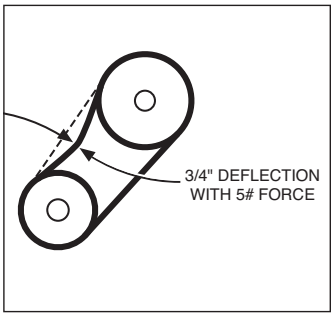

IMPORTANT

1. To prevent premature heat exchanger failure, observe heat exchanger tubes. If the bottom of the tubes become red while blower and furnace are in operation, check to be sure the blower has been set to the proper rpm for the application. Refer to page 14 for blower adjustments.
2. Start-up and adjustment procedures must be performed by a qualified service agency.

1. Turn off power to the unit at the disconnect switch. Check that fuses or circuit breakers are in place and sized correctly. Turn all hand gas valves to the “OFF” position.
2. Remove electrical junction box cover.
3. Check that the supply voltage matches the unit supply voltage listed on the Model Identification Plate. Verify that all wiring is secure and properly protected. Trace circuits to insure that the unit has been wired according to the wiring diagram. If installed at altitudes above 2,000' and the high altitude kit includes a combustion air proving switch, replace the switch in the unit with the switch provided in the kit. Take care to ensure that the tubing and electrical connections are securely fastened.
4. Check to insure that the venting system is installed correctly and free from obstructions.
5. Check to see that there are no obstructions to the intake and discharge of the unit.
6. For blower units, check the belt tension and sheave alignment. Refer to “Blower Adjustments” for proper belt tension.
7. Check bearings for proper lubrication (if applicable).
8. Check to make sure that all filters are in place and that they are installed properly according to direction of air flow (if applicable).
9. Perform a visual inspection of the unit to make sure no damage has occurred during installation. Lower bottom pan and visually inspect all components in the burner compartment. Check to ensure all fasteners are in place and the burner openings are properly aligned with the heat exchanger tubes and that the gas orifices are centered in the burner inspirator tube opening opening, as shown in Figure 16.2.
10. Check that all horizontal deflector blades are open a minimum of 30° as measured from vertical.
11. Turn on power to the unit at the disconnect switch. Check to insure that the voltage between electrical junction box terminals T1 and G is 24V.
12. Check the thermostat, ignition control, gas valve, and supply fan blower motor for electrical operation. If these do not function, recheck the wiring diagram. Check to insure that none of the Control Options have tripped.
13. Check the blower wheel for proper direction of rotation when compared to the air flow direction arrow on the blower housing (if applicable). Blower wheel rotation, not air movement, must be checked as some air will be delivered through the unit with the blower wheel running backwards.
14. For blower units, check the blower speed (rpm). Refer to “Blower Adjustments” for modification.
15. Check the motor speed (rpm).
16. Check the motor voltage. On three phase systems, check to make sure all legs are in balance.
17. Check the motor amp draw to make sure it does not exceed the motor nameplate rating. On three phase systems, check all legs to insure system is balanced.
18. Recheck the gas supply pressure at the field installed manual shut-off valve. The minimum inlet pressure should be 6" W.C. on natural gas and 11" W.C. on propane gas. The maximum inlet pressure for either gas is 14" W.C. If inlet pressure exceeds 14" W.C., a gas pressure regulator must be added upstream of the combination gas valve.
19. Open the field installed manual gas shut-off valve.
20. Open the manual main gas valve on the combination gas valve. Call for heat with the thermostat and allow the pilot to light for intermittent pilot ignition. If the pilot does not light, purge the pilot line. If air purging is required, disconnect the pilot line at outlet of pilot valve. In no case should line be purged into heat exchanger. Check the pilot flame length (See “Pilot Flame Adjustment”).
21. Once the pilot has been established, check to make sure that the main gas valve opens. Check the manifold gas pressure (see “Main Gas Adjustment”) and flame length (see “Air Shutter Adjustment”) while the supply fan blower is operating. Inspect the condition of the main flame and if necessary, resolve flame appearance problems (see “Burner Flame Adjustment” and Figures 28.1 through 28.4).
22. Check to insure that gas controls sequence properly (see “Control Operating Sequence”). Verify if the unit has any additional control devices and set according to the instructions in the “Control Options”.
23. Once proper operation of the unit has been verified, remove any jumper wires that were required for testing.
24. Replace the electrical junction box cover.
25. If installed at altitudes above 2,000', affix label included with high altitude kit and fill in all fields with a permanent marker.

Pilot Burner Adjustment

The pilot burner is orificed to burn properly with an inlet pressure of 6-7" W.C. on natural gas and 11-14" W.C. on propane gas, but final adjustment must be made after installation. If the pilot flame is too long or large, it is possible that it may cause soot and/or impinge on the heat exchanger, causing failure. If the pilot flame is shorter than shown, it may cause poor ignition and result in the controls not opening the combination gas control. A short flame can be caused by a dirty pilot orifice. Pilot flame condition should be observed periodically to assure trouble-free operation.

To Adjust the Pilot Flame

1. Create a call for heat from the thermostat.
2. Remove the cap from the pilot adjustment screw. For location, see the combination gas control literature supplied with unit.
3. Adjust the pilot length by turning the screw in or out to achieve a soft steady flame 3/4" to 1" long and encompassing 3/8"-1/2" of the tip of the thermocouple or flame sensing rod (see Figure 15.1).
4. Replace the cap from the pilot adjustment screw.

Figure 15.1 - Correct Pilot Flame

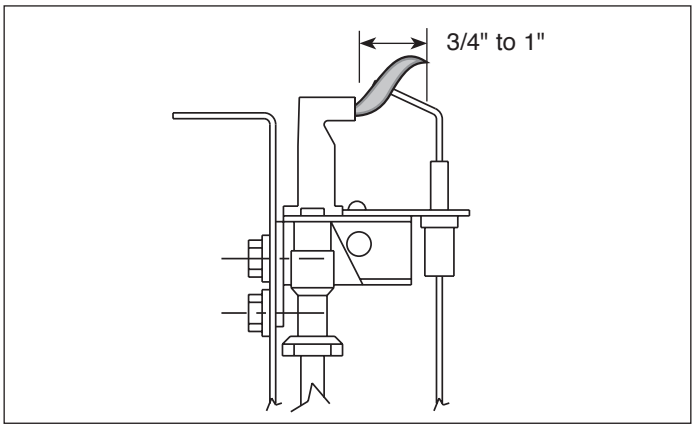

Main Burner Adjustment

The gas pressure regulator (integral to the combination gas control) is adjusted at the factory for average gas conditions. It is important that gas be supplied to the unit heater in accordance with the input rating on the serial plate. Actual input should be checked and necessary adjustments made after the unit heater is installed. Over-firing, a result of too high an input, reduces the life of the appliance and increases maintenance. Under no circumstances should the input exceed that shown on the serial plate.

Measuring the manifold pressure is done at the outlet pressure tap of the gas valve (see Figure 16.1).

To Adjust the Manifold Pressure

1. Move the field installed manual shut-off valve to the “OFF” position.
2. Remove the 1/8" pipe plug in the pipe tee or gas valve and attach a water manometer of “U” tube type which is at least 12" high.
3. Move the field installed manual gas shut-off valve to the “ON” position.
4. Create a high fire call for heat from the thermostat.
5. Determine the correct high fire manifold pressure (3.5" W.C. for natural gas, 10" W.C. for propane gas). (Pressures at 0-2,000' elevation are 3.5" W.C. for natural gas, 10" W.C. for propane gas, for elevations above 2,000' refer to the instructions in “Gas Connections - High Altitude Accessory Kit” on page 11). Adjust the main gas pressure regulator spring to achieve the proper manifold pressure (for location, see the combination gas control literature supplied with unit).
6. After adjustment, move the field installed manual shut-off valve to the “OFF” position and replace the 1/8" pipe plug.
7. After the plug is in place, move the field installed manual shut-off valve to the “ON” position and recheck pipe plugs for gas leaks with soap solution.

Burner Flame Adjustment

Proper operation provides a soft blue flame with a well-defined inner core. A lack of primary air will reveal soft yellow-tipped flames. Excess primary air produces short, well-defined flames with a tendency to lift off the burner ports. For both natural and propane gas, the flame may be adjusted by sliding the manifold. Also, for propane gas, the air shutters can be adjusted to control the burner flame height. The air shutters can be accessed by lowering the bottom pan of the unit heater.

Natural Gas Flame Control

Control of burner flames on unit heaters utilizing natural gas is achieved by resetting the manifold position to either increase or decrease primary combustion air. Prior to flame adjustment, operate unit heater for about fifteen minutes. The main burner flame can be viewed after loosening and pushing aside the gas designation disc on the back of the unit.

To increase primary air, loosen the manifold mounting screws and move the manifold away from the burner until the yellow-tipped flames disappear (see Figure 16.2). To decrease primary air, move manifold closer to the burner until flames no longer lift from burner ports, but being careful not to cause yellow tipping. Retighten manifold mounting screws after adjustment.

Propane Gas Flame Control

An optimum flame will show a slight yellow tip. Prior to flame adjustment, operate heater for at least 15 minutes. Loosen air shutter set screws and move the air shutters away from the manifold to reduce the primary air until the yellow flame tips appear (see Figure 16.3). Then increase the primary air until yellow tips diminish and a clean blue flame with a well-defined inner cone appears.

It may also be necessary to adjust the manifold position in addition to adjusting air shutters to obtain proper flame. Follow the instructions under “Natural Gas Flame Control” for adjusting the manifold.

Figure 16.1 - Typical Combination Gas Control

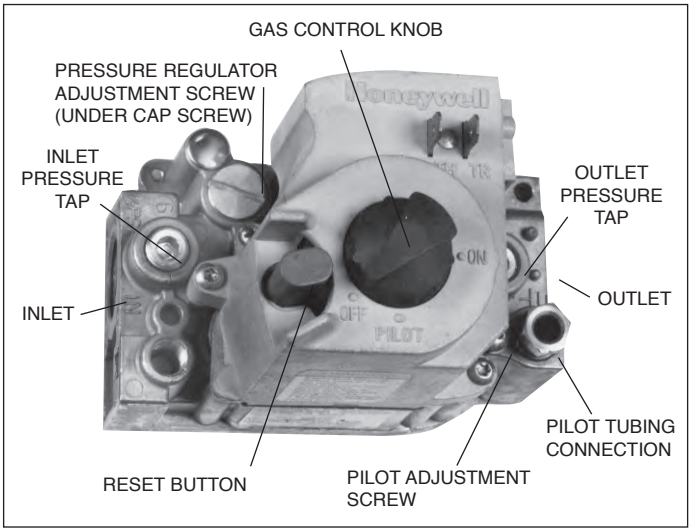

Figure 16.2 - Manifold Adjustment, Natural Gas

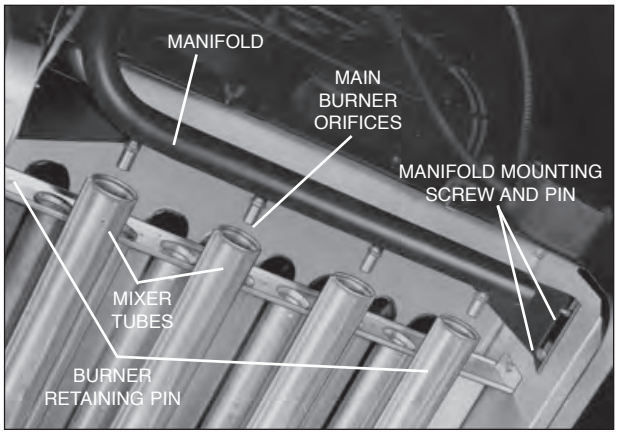

Figure 16.3 - Air Shutter Adjustment, Propane Gas

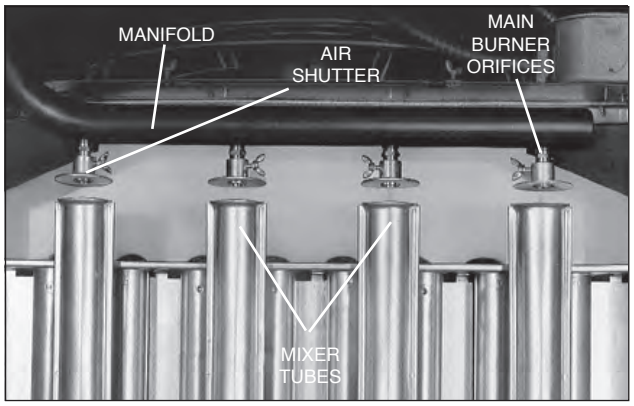

START-UP PROCEDURE

Control Operating Sequence

All units are supplied with intermittent pilot systems with continuous retry control as standard. For intermittent pilot systems, both the main burner and pilot are turned off 100% when the thermostat is satisfied. For all units, the system will attempt to light the pilot for 70 seconds. If the pilot is not sensed, the ignition control will wait approximately 6 minutes with the combination gas control closed and no spark. After 6 minutes, the cycle will begin again. After 3 cycles, some ignition controllers lockout for approximately 1 hour before the cycle begins again. This will continue indefinitely until the pilot flame is sensed or power is interrupted to the system. Refer to Table 18.1 for control code descriptions. Specific descriptions of the control sequence for different control codes are listed below.

1. The thermostat calls for heat.
2. The power exhauster relay is energized, starting the power exhauster motor. Once the motor has reached full speed, the differential pressure switch closes.
3. The pilot valve opens and the ignitor sparks for 70 seconds in an attempt to light the pilot.
4. Once the pilot is lit, the flame sensor proves the pilot and stops the ignitor from sparking.
5. On single stage units, the main gas valve is opened and the main burner is lit to 100% full fire. On two stage units, the gas valve may open at either 50% or 100%, depending on what the two stage thermostat is calling for.
6. The air mover starts after 30 to 90 seconds to allow the heat exchanger to warm up.
7. The unit continues to operate until the thermostat is satisfied, at which time both the main and pilot valves close 100%.
8. The air mover stops after 30 to 90 seconds to remove residual heat from the heat exchanger.

UNIT AND CONTROL OPTIONS

Figure 18.1 - Factory Mounted Option Location

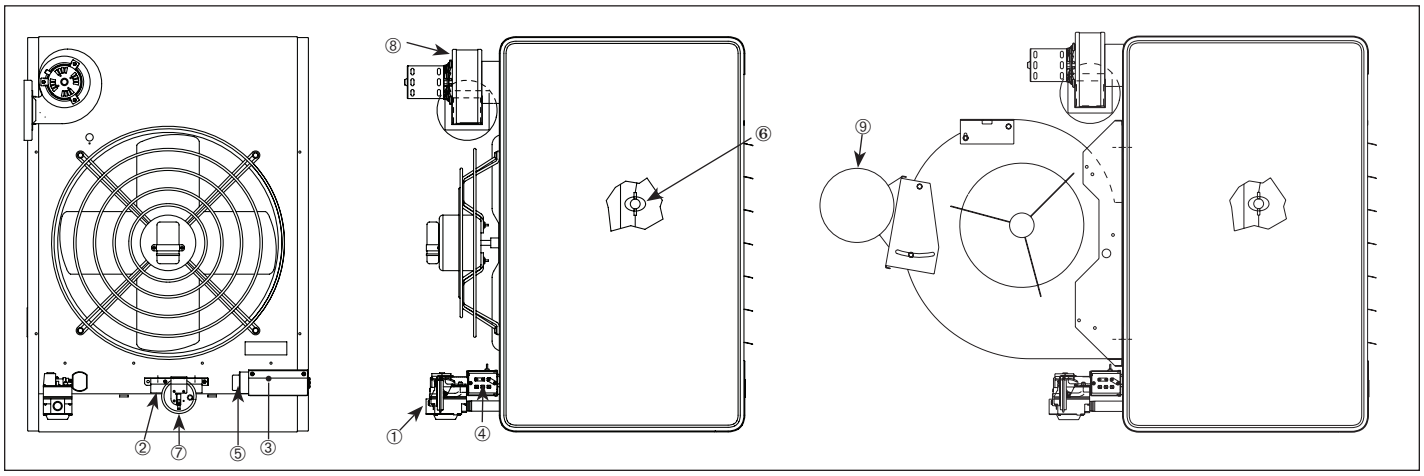

All units include the standard (STD) features. The unit must be reviewed to determine the optional (OPT) features that may have been supplied with the unit.

① **Gas Valve**

a) Single Stage Gas Valve - (STD)
The main gas valve provides the pilot, regulator, main gas, and manual shutoff functions. For additional information, see the supplier literature included with the unit.

b) Two Stage Gas Valve - (OPT)
The two stage gas valve provides the pilot, regulator, main gas (100% and 50% fire), and manual shutoff functions. For additional information, see the supplier literature included with the unit.

② **Ignition controller - (STD)**

The ignition controller is factory installed on the back of the unit heater with the spark igniter and sensor located on the burner. For additional information, refer to “Control Operating Sequence” on page 16 and the supplier literature included with the unit.

③ **Time Delay Relay - (STD)**

The time delay relay is factory installed in electrical junction box and controls propeller/blower motor function. For single-phase units below 2 Hp, the time delay relay controls the motor directly. For single-phase units 2 Hp and greater and all three phase units, the time delay relay controls the motor starter. For additional information, refer to “Control Operating Sequence” on page 17.

④ **Low Voltage Terminal Board - (STD)**

The low voltage terminal board is located in the electrical junction box. The terminal board is labeled to match the electrical wiring diagram provided with the unit. All low voltage field wiring connections should be made to the exposed side of the terminal board (exterior of electrical junction box) to prevent miswiring by modifying the factory wiring, which is inside the electrical junction box.

⑤ **Control Step Down Transformer - (STD)**

The control step down transformer is located in the electrical junction box. The transformer is used to step down the supply power (115V, 208V, 230V, 460V, 575V) to 24V. This transformer is used to control the gas controls, fan delay relay, field supplied motor starter, etc. All unit heaters are supplied with a 40VA control step down transformer. To determine the control transformer supplied as well as any accessory/field supplied transformers required, reference the supply voltage listed on the serial plate and reference Tables 19.2 and 19.3.

⑥ **High Limit Switch - (STD)**

The automatic reset high limit switch is factory installed on the left side (air blowing at you) of the unit heater. If the limit temperature is exceeded, the gas controls are de-energized until the switch is cooled.

⑦ **Pressure Switch (STD)**

An automatic reset vent pressure switch is designed to prevent operation of the main burner if there is restricted venting of flue products. This restriction may occur due to an improper vent diameter, long vent runs, unapproved vent terminal, high winds, high negative pressure within space, etc. After the cause of the restriction has been corrected, the pressure switch will reset automatically. See the troubleshooting section for more information.

⑧ **Power Exhauster (STD)**

All power vented unit heaters are supplied with a round vent pipe connection. Some models may require the use of a vent transition from the power exhauster outlet to the vent pipe (see Table 6.1). The power exhauster may be rotated 180° to allow for various venting directions.

⑨ **Blower Motor - (STD on BDP models only)**

The blower motor can be provided in a variety of supply voltages and motor horsepowers. Refer to the model nomenclature to determine the motor provided. The blower motor is supplied with an adjustable sheave that can be used to increase/decrease the blower RPM. For instructions on changing the blower RPM, refer to “Blower Adjustments.”

Table 18.1 - Control Descriptions - Models PDP & BDP

Control System Description	Control Code		Service Voltage	Thermostat Voltage
	Natural Gas	Propane Gas		
Single-Stage ①	30 31 32 33	85 86 93 94	115V 208/230V 460V ② 575V ②	25V 25V 25V 25V
Two-Stage ①	63 64	87 88	115V 208/230V	25V 25V

① All controls are intermittent pilot ignition, 100% shut-off with continuous retry.
② Factory wired 460/575 available on blower models. Field installed step down transformer may be used for 460/575 propeller applications.

GENERAL PERFORMANCE DATA

Table 19.1 - Performance - Propeller (PDP) and Blower (BDP) Models ① ②

		Model Number													
		PDP 150	PDP 175	PDP 200	PDP 250	PDP 300	PDP 350	PDP 400	BDP 150	BDP 175	BDP 200	BDP 250	BDP 300	BDP 350	BDP 400
Btu/Hr. Input ①		150,000	175,000	200,000	250,000	300,000	350,000	400,000	150,000	175,000	200,000	250,000	300,000	350,000	400,000
Btu/Hr. Output ①		120,000	140,000	160,000	200,000	240,000	280,000	320,000	120,000	140,000	160,000	200,000	240,000	280,000	320,000
Entering Airflow (CFM)		2180	2550	2870	3700	4460	4870	5440	2020	2357	2694	3367	4040	4714	5387
CFM Range		–	–	–	–	–	–	–	1587-2778	1852-3241	2116-3704	2646-4630	3175-5556	3704-6481	4233-6584
Air Temp. Rise (°F)		51	51	52	50	50	53	54	40-70	40-70	40-70	40-70	40-70	40-70	40-70
Max. Mounting Hgt. (Ft.) ②		16	17	15	19	21	20	19	14	15	13	16	18	19	19
Heat Throw (Ft) ② (Max. Mtg. Hgt.)		55	59	51	67	74	70	69	49	52	47	58	64	67	68
HP	Motor Type ③	PSC	PSC	PSC	PSC	PSC	PSC	PSC	For motor size details, refer to pages 20 and 21.						
	115/60/1 (PC01)	1/8	1/6	1/6	1/3	1/2	3/4	3/4							
	230/60/1 (PC02)	1/8	1/6	1/6	1/3	1/2	3/4	3/4							
	208/60/1 (PC03)	N/A	1/6	1/6	N/A	N/A	N/A	N/A							

Table 19.2 - Propeller Unit Model PDP Operating Electrical Data ③

Supply Voltage	Power Code		Model PDP Sizes						
			150	175	200	250	300	350	400
115V 1 Phase	01 (115V)	Motor Amps	2.30	2.80	2.80	5.40	7.50	8.80	8.80
		Total Amps	4.05	4.55	5.15	7.75	9.85	11.15	11.15
		Transformer kVA	n/a	n/a	n/a	n/a	n/a	n/a	n/a
208V 1 Phase	01 (115V) with Transformer	Transformer kVA	0.50	1.00	1.00	1.00	1.50	1.50	1.50
		208V Total Amps	2.24	2.52	2.85	4.28	5.45	6.16	6.16
	03 (208V)	Motor Amps	n/a	1.00	1.00	n/a	n/a	n/a	n/a
		Total Amps		1.90	2.15				
230V 1 Phase	01 (115V) with Transformer	Transformer kVA	0.50	0.75	0.75	1.00	1.50	1.50	1.50
		230V Total Amps	2.03	2.28	2.58	3.88	4.93	5.58	5.58
	02 (230V)	Motor Amps	0.80	1.00	1.00	2.20	2.30	4.40	4.40
		Total Amps	1.64	1.84	2.28	3.48	3.58	5.68	5.68
208V 3 Phase	01 (115V) with Transformer	Transformer kVA	0.50	1.00	1.00	1.00	1.50	1.50	1.50
		208V Total Amps	2.24	2.52	2.85	4.28	5.45	6.16	6.16
230V 3 Phase	01 (115V) with Transformer	Transformer kVA	0.50	0.75	0.75	1.00	1.50	1.50	1.50
		230V Total Amps	2.03	2.28	2.58	3.88	4.93	5.58	5.58
460V 3 Phase	01 (115V) with Transformer	Transformer kVA	0.50	0.75	0.75	1.00	1.50	1.50	1.50
		460V Total Amps	1.01	1.14	1.29	1.94	2.46	2.79	2.79
575V 3 Phase	01 (115V) with Transformer	Transformer kVA	0.50	0.75	0.75	1.00	1.50	1.50	1.50
		575V Total Amps	0.81	0.91	1.03	1.55	1.97	2.23	2.23

Table 19.3 - Blower Model BDP Motor Amp Draw - ④ ⑤

Motor HP	Supply Voltage					
	115V/1ph	230V/1ph	208V/3ph	230V/3ph	460V/3ph	575V/3ph
1/4	3.70	2.70	1.40	1.50	0.75	0.46
1/3	5.00	2.50	1.10	1.10	0.60	0.64
1/2	7.20	3.60	2.10	2.20	1.10	0.80
3/4	11.00	5.50	3.00	3.00	1.50	1.30
1	14.00	7.00	3.20	3.20	1.60	1.30
1-1/2	15.00	7.50	4.60	4.80	2.40	1.90
2	-	-	6.00	5.80	2.90	2.30
3	-	-	8.40	7.80	3.90	3.20
5	-	-	13.60	12.30	6.20	5.10

Table 19.4 - Blower Model BDP Control Circuit Amp Draw ④ ⑤

Model Size	Supply Voltage					
	115V/1ph	230V/1ph	208V/3ph	230V/3ph	460V/3ph	575V/3ph
150-175	1.75	0.84	0.86	0.84	0.42	0.44
200-400	2.35	1.28	1.10	1.28	0.72	0.62

Table 19.5 - Blower Model BDP Accessory Transformer Size (kVA) ⑥

Model Size	Supply Voltage			
	208V 1 or 3 ph	230V 1 or 3 ph	460V 3 ph	575V 3 ph
150-175	n/a	n/a	0.25	0.25
200-400	n/a	n/a	0.50	0.50

① Ratings shown are for elevations up to 2,000 feet. For elevations above 2,000 feet, ratings should be reduced at the rate of 4% for each 1,000 feet above sea level. (In Canada see rating plate.) Reduction of ratings requires use of a high altitude kit.
② Data taken at 55°F air temperature rise. At 65°F ambient and unit fired at full-rated input. Mounting height as measured from bottom of unit, and without deflector hoods.
③ All motors used are produced, rated and tested by reputable manufacturers in accordance with NEMA standards and carry the standard warranty of both the motor manufacturer and Modine. Model BDP motors are totally enclosed and all single phase motors have built-in thermal overload protection.
④ Amp draw data shown is operating amp draw at incoming power. For units that use a field installed accessory step-down transformer as noted, the amp draw shown is the primary side operating amp draw. For sizing of circuit protection for equipment with transformers, please refer to the National Electric Code.
⑤ For BDP models, add the Motor Amp Draw and Control Circuit Amp Draw to get the Total Unit Amp Draw.
⑥ Transformers for blower models are typically smaller than those used for propeller models, as the transformer is not needed for the blower motor.

GENERAL PERFORMANCE DATA

Table 20.1 - Models With or Without Blower Enclosure - Blower Model BDP ① ②

Model Size	ATR	CFM	0.0" Static Press.				0.1" Static Press.				0.2" Static Press.				0.3" Static Press.				0.4" Static Press.				0.5" Static Press.				Data for use with filters only: 0.6" Static Press.				Data for use with filters only: 0.7" Static Press.			
			RPM	HP	Drive	Turns	RPM	HP	Drive	Turns	RPM	HP	Drive	Turns	RPM	HP	Drive	Turns	RPM	HP	Drive	Turns	RPM	HP	Drive	Turns	RPM	HP	Drive	Turns	RPM	HP	Drive	Turns
150	40	2778	515	1/2	96	4.0	565	3/4	38	4.5	615	3/4	38	4.0	665	3/4	38	3.0	705	1	38	2.0	750	1	38	1.5	-	-	-	-	-	-	-	-
	45	2469	455	1/3	191	0.0	515	1/2	96	4.0	570	1/2	96	3.0	620			3.5	670	3/4		3.0	715			2.0	755	1	38	1.5	-	-	-	-
	50	2222	410	1/4		1.5	475	1/3	95	5.0	535			3.5	590	1/2	96	2.5	640			3.5	685	3/4		2.0	730	3/4		2.0	-	-	-	-
	55	2020	375			2.5	445	1/4	191	0.5	505	1/3	95	4.0	565			3.0	615	1/2	96	2.0	665			3.0	715				-	-	-	-
	60	1852	345			3.5	420			1.0	485			4.5	545			3.5	600			2.5	650	1/2	96	1.5	700			2.5	-	-	-	-
	65	1709	315			4.0	400			2.0	470			5.0	530	1/3	95	4.0	585				640				690				-	-	-	-
	70	1587	295			5.0	380			2.5	455	1/4	191	0.0	520				575	1/3	95	3.0	630			2.0	680	1/2	96	1.0	-	-	-	-
175	40	3241	805	1-1/2	193	3.5	840	1-1/2	193	2.5	875	1-1/2	193	2.0	910	1-1/2	193	1.0	940	1-1/2	193	0.0	970	2	80	2.5	1005	2	80	1.5	1035	2	80	1.0
	45	2881	715	1	192	4.0	755	1	192	3.5	795	1	192	3.0	830			3.0	865			2.0	900	1-1/2	193	1.0	935	1-1/2	193	0.5	970			2.5
	50	2593	645	3/4		5.0	690	3/4		4.5	730	3/4		4.0	770	1	192	3.5	810	1	192	3.0	845	1	192	2.5	885			1.5	920	1-1/2	193	0.5
	55	2357	585	1/2	96	2.5	635	1/2	96	1.5	680			4.5	720	3/4		4.0	765	3/4		3.5	805			3.0	845	1		2.5	880	1		1.5
	60	2160	540	1/3	95	3.5	590			2.5	640	1/2	96	1.5	685			4.5	730			4.0	770	3/4		3.5	815				855			2.0
	65	1994	495			4.5	550	1/3	95	3.5	605			2.5	655	1/2	96	1.5	700	1/2	96	0.5	745				790	3/4		3.0	830	3/4		2.5
	70	1852	460			5.0	520			4.0	575	1/3	95	3.0	630			2.0	680			1.0	725	1/2	96	0.0	770			3.5	815			
200	40	3704	420	3/4	16	5.0	465	3/4	16	4.0	505	1	16	3.0	540	1	16	2.0	580	1	16	1.0	615	1-1/2	105	4.0	650	1-1/2	105	3.0	-	-	-	-
	45	3292	375	1/2	101		420	1/2	101	3.5	465	3/4		3.5	510	3/4		2.5	550			2.0	590	1		1.0	625			4.0	-	-	-	-
	50	2963	335	1/3	212	1.0	390			4.5	440	1/2	101	3.0	485			3.5	525	3/4		2.5	570	3/4	16	1.5	610	1	16	0.5	-	-	-	-
	55	2694	305	1/4		2.0	365	1/3	102	5.0	415			3.5	465	1/2	101	2.5	510				555				595				-	-	-	-
	60	2469	280			3.0	345	1/4	212	0.5	400	1/3	102	4.0	450			3.0	500	1/2	101	1.5	545			2.0	590	3/4		1.0	-	-	-	-
	65	2279	260			4.0	325			1.5	385			4.5	440				490			2.0	540				585				-	-	-	-
	70	2116	240			5.0	310			2.0	375			5.0	430	1/3	102	3.5	485				535	1/2	101	0.5	580				-	-	-	-
250	40	4630	605	1-1/2	105	4.5	635	1-1/2	105	3.5	665	1-1/2	105	3.0	690	2	108	4.0	720	2	108	3.0	750	2	108	2.5	775	2	108	2.0	-	-	-	-
	45	4115	535	1	205	3.5	570	1	205	3.0	605			4.5	635	1-1/2	105	3.5	665	1-1/2	105	2.5	695	1-1/2	105	2.0	725			3.0	755	2	108	2.5
	50	3704	485	3/4		4.5	520	3/4		4.0	555	1	205	3.0	590	1	205	2.5	625			4.0	660			3.0	690	1-1/2	105	2.0	720	1-1/2	105	1.0
	55	3367	440	1/2	204	2.0	480			5.0	520	3/4		4.0	555	3/4		3.0	595	1	205	2.5	630	1	205	2.0	665			3.0	695			2.0
	60	3086	405			3.0	450	1/2	204	1.5	490			4.5	530			4.0	570			3.0	605				645	1	205	0.5	680	1	205	1.0
	65	2849	370	1/3	203	4.0	420			2.5	465	1/2	204	1.0	510				550	3/4		3.5	590	3/4		2.5	630			2.0	665			
	70	2646	345			4.5	395	1/3	203	3.0	445			1.5	490	1/2	204	0.5	535				575			3.0	615	3/4			655			
300	40	5556	825	3	111	3.0	850	3	111	2.5	875	3	111	2.0	900	3	111	1.0	-	-	-	-	-	-	-	-	-		-	-	-	-	-	-
	45	4938	735	2	108		760	2	108	2.0	790	2	108	1.5	815			3.0	840	3	111	2.5	865	3	111	2.0	890	3	111	1.5	915	3	111	1.0
	50	4444	660	1-1/2	106	5.0	690	1-1/2	106	4.0	720	1-1/2	106	3.0	750	2	108	2.5	780	2	108	1.5	805	2	108	1.0	830	2	108	0.5	860			2.0
	55	4040	600	1	205	2.5	635			5.0	665			4.5	700	1-1/2	106	4.0	730	1-1/2	106	3.0	760	1/2	106	2.5	785			1.5	815	2	108	1.0
	60	3704	550	3/4		3.5	590	1	205	2.5	625	1	205	2.0	655			5.0	690			4.0	720			3.5	750	1-1/2	106	2.5	780	1-1/2	106	1.5
	65	3419	510			4.0	550	3/4		3.5	585	3/4		2.5	620	1	205	2.0	655	1	205	1.0	690			4.0	720			3.5	750			2.5
	70	3175	470			5.0	515			4.0	555			3.5	595	3/4		2.5	630			2.0	660	1	205	1.0	695	1	205	0.5	725			3.0
350	40	6481	960	5	207	2.5	980	5	207	2.0	1005	5	207	1.5	1030	5	207	1.0	1050	5	207	0.5	1070	5	207	0.5	1095	5	207	0.0	-	-	-	-
	45	5761	850	3	111		880	3	111	1.5	905	3	111	1.0	930			3.0	955			2.5	975			2.0	1000			1.5	1025	5	207	1.5
	50	5185	765	2	210	4.5	795			3.5	825			3.0	850	3	111	2.5	880	3	111	1.5	905	3	111	1.0	930	3	111	0.5	955	3	111	0.0
	55	4714	695	1-1/2	105	2.0	730	2	210	5.0	760	2	210	4.5	790	2	210	3.5	820	2	210	3.0	845			2.5	870			2.0	900			1.0
	60	4321	640			3.5	675	1-1/2	105	2.5	710	1-1/2	105	1.5	740	1-1/2	105	0.5	770			4.0	800	2	210	3.5	825	2	210	3.0	855	2	210	2.5
	65	3989	590	1	107	4.5	630	1	107	3.5	665			3.0	695			2.0	730	1-1/2	105	1.0	760	1-1/2	105	0.0	790	1-1/2		4.0	815			3.0
	70	3704	550			5.0	590			4.5	625	1	107	3.5	660	1	107	3.0	695			2.0	725			1.0	755		105	0.0	785	1-1/2	100	4.0
400	40	-	-	-	-	-	-	-	-	-	-	-	-	-	-	-	-	-	-	-	-	-	-	-	-	-	-	-	-	-	-	-	-	-
	45	6584	885	5	207	4.0	915	5	207	3.5	940	5	207	3.0	965	5	207	2.5	985	5	207	2.0	1010	5	207	1.5	1035	5	207	1.0	1055	5	207	0.5
	50	5926	800	3	111	3.5	825	3	111	3.0	855	3	111	2.0	880			4.0	910			3.5	935			3.0	955			2.5	980			2.0
	55	5387	725	2	210	5.0	760			4.5	790			4.0	815	3	111	3.0	845	3	111	2.5	870	3	111	2.0	895	3	111	1.0	920	3	111	0.5
	60	4938	665	1-1/2	105	2.5	700	2	210	6.0	735	2	210	5.0	765	2	210	4.5	795			3.5	820			3.0	850			2.5	875			2.0
	65	4558	615			4.0	650	1-1/2	105	3.0	685	1-1/2	105	2.0	720			5.0	750	2	210	4.5	780	2	210	4.0	805	2	210	3.5	835	2	210	2.5
	70	4233	570			4.5	610			4.5	650			3.5	680	1-1/2	105	2.5	715	1-1/2	105	1.5	745	1-1/2	105	0.5	775			4.0	800			3.5

① Outputs shown are for elevations up to 2000'. For elevations over 2000', output needs to be reduced 4% for each 1000' above sea level. (Does not apply in Canada - see rating plate)
② Sheave turns open are approximate. For proper operation, check blower rpm.
③ Models not shown use same HP and drive numbers as cataloged.
④ Performance is the same; motor sheave accommodates larger shaft. When ordering 230/460V (1 & 1-1/2 HP) or 575V, specify the listed 230/460V (1 & 1-1/2 HP) or 575V drive.

Alternate Drives for 575V ③

Model	Drive for Under 575V		Drive for 575V
150	1/4 - 191	=	1/4 - 197
	1/3 - 191	=	1/3 - 197
	1/3 - 95	=	1/3 - 96
	1 - 38	=	1 - 254
	1/3 - 95	=	1/3 - 96
	1 - 192	=	1 - 256
175	1-1/2 - 193	=	1-1/2 - 198
	1 - 192	=	1 - 256
	1-1/2 - 193	=	1-1/2 - 198
200	1/4 - 212	=	1/4 - 213
	1/3 - 212	=	1/3 - 213
	1/3 - 102	=	1/3 - 101
	1 - 16	=	1 - 178
	1 - 16	=	1 - 178
	1-1/2 - 105	=	1-1/2 - 180
	1-1/2 - 105	=	1-1/2 - 180
	1/3 - 203	=	1/3 - 204
250	1 - 205	=	1 - 157
	1-1/2 - 105	=	1-1/2 - 180
	1 - 205	=	1 - 157
300	1-1/2 - 105	=	1-1/2 - 180
	1-1/2 - 106	=	1-1/2 - 108
	1 - 205	=	1 - 157
350	1 - 205	=	1 - 157
	1-1/2 - 105	=	1-1/2 - 180
	1-1/2 - 100	=	1-1/2 - 210
400	1-1/2 - 105	=	1-1/2 - 180

Alternate Drives for 208-230/460V ③

Model	HP & Drive Listed		HP & Drive Needed
150	1 - 38	=	1 - 254
	1 - 192	=	1 - 256
175	1-1/2 - 193	=	1-1/2 - 198
	1-1/2 - 79	=	1-1/2 - 80
	1 - 16	=	1 - 178
200	1-1/2 - 105	=	1-1/2 - 180
	1-1/2 - 23	=	1-1/2 - 177
	1 - 205	=	1 - 157
250	1-1/2 - 105	=	1-1/2 - 180
	1-1/2 - 23	=	1-1/2 - 177
	1 - 205	=	1 - 157
300	1-1/2 - 105	=	1-1/2 - 180
	1-1/2 - 23	=	1-1/2 - 177
	1 - 205	=	1 - 157
350	1-1/2 - 106	=	1-1/2 - 108
	1-1/2 - 105	=	1-1/2 - 180
	1 - 205	=	1 - 157
400	1-1/2 - 105	=	1-1/2 - 180

Filters

For blower units with enclosure and filter, add the following static pressures to the static pressure determined by the system designer for total external static pressure.

BDP 150	0.1" W.C.
BDP 175	0.2" W.C.
BDP 200	0.1" W.C.
BDP 250	0.2" W.C.
BDP 300	0.2" W.C.
BDP 350	0.2" W.C.
BDP 400	0.2" W.C.

GENERAL PERFORMANCE DATA

Table 21.1 - Power Code Description - Blower Model BDP ①

Power Code	Voltage	Phase	150		175		200		250		300		350		400	
			HP	Drive	HP	Drive	HP	Drive	HP	Drive	HP	Drive	HP	Drive	HP	Drive
01	115	1	1/4	191	-	-	1/4	212	-	-	-	-	-	-	-	-
02	230	1	1/4	191	-	-	1/4	212	-	-	-	-	-	-	-	-
07	575	3	1/4	197	-	-	1/4	213	-	-	-	-	-	-	-	-
08	208-230/460	3	1/4	191	-	-	1/4	212	-	-	-	-	-	-	-	-
09	115	1	1/3	191	1/3	95	1/3	212	1/3	203	3/4	205	1	107	1-1/2	105
10	230	1	1/3	191	1/3	95	1/3	212	1/3	203	3/4	205	1	107	1-1/2	105
15	575	3	1/3	197	1/3	96	1/3	213	1/3	204	3/4	205	1	255	1-1/2	180
16	208-230/460	3	1/3	191	1/3	95	1/3	212	1/3	203	3/4	205	1	255	1-1/2	180
17	115	1	1/3	95	1/2	96	1/3	102	1/2	204	1	205	1-1/2	105	-	-
18	230	1	1/3	95	1/2	96	1/3	102	1/2	204	1	205	1-1/2	105	-	-
23	575	3	1/3	96	1/2	96	1/3	101	1/2	204	1	157	1-1/2	180	2	210
24	208-230/460	3	1/3	95	1/2	96	1/3	102	1/2	204	1	157	1-1/2	180	2	210
25	115	1	1/2	96	3/4	192	1/2	101	3/4	205	1-1/2	106	1-1/2	100	-	-
26	230	1	1/2	96	3/4	192	1/2	101	3/4	205	1-1/2	106	1-1/2	100	-	-
31	575	3	1/2	96	3/4	192	1/2	101	3/4	205	1-1/2	108	1-1/2	210	3	111
32	208-230/460	3	1/2	96	3/4	192	1/2	101	3/4	205	1-1/2	108	1-1/2	33	3	111
33	115	1	3/4	38	1	192	3/4	16	1	205	-	-	-	-	-	-
34	230	1	3/4	38	1	192	3/4	16	1	205	-	-	-	-	-	-
39	575	3	3/4	38	1	256	3/4	16	1	157	2	108	2	210	5	207
40	208-230/460	3	3/4	38	1	256	3/4	16	1	157	2	108	2	210	5	207
41	115	1	1	38	1-1/2	193	1	16	1-1/2	105	-	-	-	-	-	-
42	230	1	1	38	1-1/2	193	1	16	1-1/2	105	-	-	-	-	-	-
47	575	3	1	254	1-1/2	198	1	178	1-1/2	180	3	111	3	111	2	180
48	208-230/460	3	1	254	1-1/2	198	1	178	1-1/2	180	3	111	3	111	2	180
49	115	1	1/4	13	-	-	1-1/2	105	-	-	1-1/2	105	-	-	-	-
50	230	1	1/4	13	-	-	1-1/2	105	-	-	1-1/2	105	-	-	-	-
55	575	3	1/4	14	2	80	1-1/2	180	2	108	1-1/2	110	5	207	3	112
56	208-230/460	3	1/4	13	2	80	1-1/2	180	2	108	1-1/2	180	5	207	3	112
57	115	1	3/4	96	3/4	96	1/4	24	3/4	204	-	-	-	-	-	-
58	230	1	3/4	96	3/4	96	1/4	24	3/4	204	-	-	-	-	-	-
63	575	3	3/4	96	3/4	96	1/4	25	3/4	204	-	-	2	180	5	111
64	208-230/460	3	3/4	96	3/4	96	1/4	24	3/4	204	-	-	2	180	5	111
65	115	1	-	-	1-1/2	79	1/3	24	1-1/2	23	-	-	-	-	-	-
66	230	1	-	-	1-1/2	79	1/3	24	1-1/2	23	-	-	-	-	-	-
71	575	3	-	-	1-1/2	80	1/3	25	1-1/2	177	-	-	5	181	-	-
72	208-230/460	3	-	-	1-1/2	80	1/3	24	1-1/2	177	-	-	5	181	-	-
73	115	1	-	-	-	-	1/2	25	-	-	-	-	-	-	-	-
74	230	1	-	-	-	-	1/2	25	-	-	-	-	-	-	-	-
79	575	3	-	-	-	-	1/2	25	-	-	-	-	-	-	-	-
80	208-230/460	3	-	-	-	-	1/2	25	-	-	-	-	-	-	-	-
81	115	1	-	-	-	-	3/4	101	-	-	-	-	-	-	-	-
82	230	1	-	-	-	-	3/4	101	-	-	-	-	-	-	-	-
87	575	3	-	-	-	-	3/4	101	-	-	-	-	-	-	-	-
88	208-230/460	3	-	-	-	-	3/4	101	-	-	-	-	-	-	-	-
89	115	1	-	-	-	-	1-1/2	23	-	-	-	-	-	-	-	-
90	230	1	-	-	-	-	1-1/2	23	-	-	-	-	-	-	-	-
95	575	3	-	-	-	-	1-1/2	177	-	-	-	-	-	-	-	-
96	208-230/460	3	-	-	-	-	1-1/2	177	-	-	-	-	-	-	-	-

① For selection of correct Power Code, refer to the tables on page 20.

PERFORMANCE DATA - HOODS

Table 22.1 - Performance Data - 30°, 60° and 90° Downward Deflector Hoods

Mounting Height to Bottom of Heater	30° Downward Hood For Propeller Units																													
	PDP ①															BDP ②														
	PDP 150			PDP 175			PDP 200			PDP 250			PDP 300			PDP 350			PDP 400			BDP 150			BDP 175			BDP 200			BDP 250			BDP 300			BDP 350			BDP 400		
	X	Y	Z	X	Y	Z	X	Y	Z	X	Y	Z	X	Y	Z	X	Y	Z	X	Y	Z	X	Y	Z	X	Y	Z	X	Y	Z	X	Y	Z	X	Y	Z	X	Y	Z	X	Y	Z
8'	16	36	49	18	38	52	15	33	45	21	44	60	24	49	67	22	46	63	22	45	62	26	53	72	28	56	76	24	50	68	31	63	86	35	69	94	37	73	99	30	61	84
10'	15	34	47	17	37	51	14	31	43	20	43	59	23	48	66	21	45	62	21	44	61	25	52	71	26	55	75	23	49	67	30	62	85	34	69	94	36	72	98	29	61	83
12'	14	33	45	15	35	49	12	30	41	19	42	58	21	47	65	20	44	61	19	43	59	23	51	70	25	54	74	22	48	66	29	62	84	33	68	93	34	71	97	28	60	82
14'	12	30	42	14	33	46	11	27	37	17	40	56	20	46	63	19	43	59	18	42	57	22	50	68	24	53	73	21	47	64	28	61	83	31	67	92	33	71	96	27	59	80
16'	10	27	38	12	31	43	8	22	31	16	38	53	19	44	61	17	41	56	16	40	55	21	48	66	23	52	71	19	45	62	27	59	81	30	66	90	32	69	95	26	57	79
18'	6	20	29	9	26	37	6	18	26	14	36	50	17	42	58	15	38	53	15	37	52	19	46	64	21	50	69	18	43	59	25	58	80	29	65	89	31	68	93	24	56	77
20'										12	32	45	15	39	54	13	35	49	13	33	47	18	44	61	20	48	66	16	40	56	24	56	77	28	63	87	30	67	92	23	54	75
22'										8	24	35	13	35	49	10	29	42	8	25	37	16	41	57	18	45	63	14	36	51	22	54	75	26	62	85	28	65	90	21	52	72
24'													8	26	38	8	24	36	8	24	35	13	36	51	16	42	59	10	29	42	21	52	72	25	59	82	27	63	87	20	49	69
26'																															19	48	68	23	57	79	25	61	85	18	46	64
28'																															16	44	62	21	54	75	23	58	81	15	41	58
30'																															12	36	52	19	50	70	21	55	77	10	32	47

Mounting Height to Bottom of Heater	60° Downward Hood For Propeller Units																													
	PDP ①															BDP ②														
	PDP 150			PDP 175			PDP 200			PDP 250			PDP 300			PDP 350			PDP 400			BDP 150			BDP 175			BDP 200			BDP 250			BDP 300			BDP 350			BDP 400		
	X	Y	Z	X	Y	Z	X	Y	Z	X	Y	Z	X	Y	Z	X	Y	Z	X	Y	Z	X	Y	Z	X	Y	Z	X	Y	Z	X	Y	Z	X	Y	Z	X	Y	Z	X	Y	Z
8'	0	38	52	0	40	55	0	35	47	0	47	65	0	52	72	0	49	68	0	48	66	0	56	77	0	60	82	0	53	73	0	68	93	0	74	102	0	78	107	0	66	90
10'	0	36	49	0	39	53	0	33	45	0	46	63	0	51	70	0	48	66	0	47	64	0	55	76	0	59	81	0	52	71	0	67	91	0	74	101	0	77	106	0	65	88
12'	0	33	46	0	36	50	0	30	41	0	44	60	0	50	68	0	46	64	0	45	62	0	54	74	0	57	79	0	50	69	0	65	90	0	72	99	0	76	104	0	63	87
14'	0	30	41	0	33	46	0	26	36	0	41	57	0	48	65	0	44	61	0	43	59	0	52	71	0	56	76	0	48	67	0	64	88	0	71	97	0	75	102	0	62	85
16'	0	25	35	0	29	41	0	19	27	0	38	53	0	45	62	0	41	57	0	40	55	0	50	68	0	54	74	0	46	63	0	62	85	0	69	95	0	73	100	0	60	82
18'	0	13	19	0	23	32	0	12	17	0	35	48	0	42	58	0	38	52	0	36	50	0	47	64	0	51	70	0	43	59	0	60	82	0	68	93	0	72	98	0	58	79
20'										0	29	40	0	38	52	0	33	46	0	31	43	0	43	60	0	48	66	0	39	54	0	58	79	0	65	90	0	70	95	0	55	76
22'										0	16	23	0	32	45	0	25	35	0	21	30	0	39	54	0	44	61	0	34	47	0	55	75	0	63	86	0	67	92	0	52	72
24'													0	19	28	0	16	24	0	16	23	0	33	45	0	39	54	0	24	34	0	51	70	0	60	82	0	64	89	0	48	66
26'																															0	46	64	0	56	78	0	61	84	0	43	60
28'																															0	40	56	0	52	72	0	57	79	0	36	50
30'																															0	30	43	0	46	65	0	53	73	0	22	31

Mounting Height to Bottom of Heater	90° Downward Hood For Propeller Units													
	PDP ①							BDP ②						
	PDP 150	PDP 175	PDP 200	PDP 250	PDP 300	PDP 350	PDP 400	BDP 150	BDP 175	BDP 200	BDP 250	BDP 300	BDP 350	BDP 400
	S	S	S	S	S	S	S	S	S	S	S	S	S	S
8'	38	42	36	54	62	58	56	72	79	70	98	113	121	94
10'	34	37	32	48	56	52	50	65	70	63	88	101	108	84
12'	31	34	29	44	51	47	46	59	64	58	80	92	99	77
14'	29	32	27	41	47	44	42	55	60	53	74	85	91	71
16'	27	29	25	38	44	41	39	51	56	50	70	80	85	67
18'	25	28	24	36	42	38	37	48	53	47	66	75	81	63
20'	24	26	23	34	40	36	35	46	50	45	62	71	76	60
22'	23	25	22	33	38	35	34	44	48	42	59	68	73	57
24'				31	36	33	32	42	45	41	57	65	70	55
26'				30	35	32	31	40	44	39	55	63	67	52
28'				29	33	31	30	39	42	38	53	60	65	50
30'					32	30	29	37	41	36	51	58	62	49
32'								36	39	35	49	56	60	47
34'								35	38	34	48	55	59	46
36'											46	53	57	45
38'											45	52	55	43
40'											44	50	54	42
42'											43	49	53	41

① Data based on units fired at full rated input with an entering air temperature of 60°-80°F.
Maximum mounting heights higher versus units without outlet devices.

② Data based on unit fired at full rated input, 60°-80°F entering air temperature, and a 40°F temperature rise through unit.
Maximum mounting heights higher versus units without outlet devices.

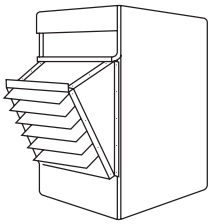

30° HOOD

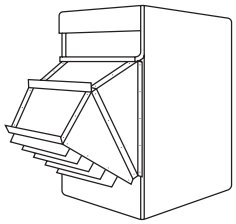

60° HOOD

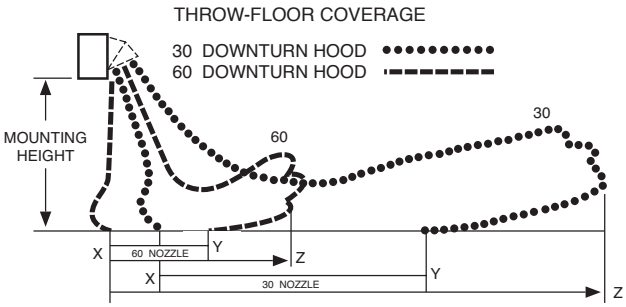

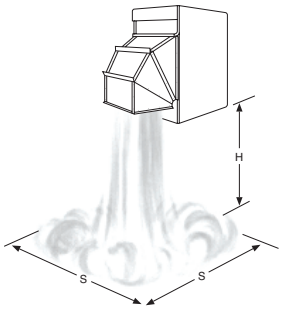

90° HOOD

PERFORMANCE DATA – NOZZLES

Figure 23.1 - Mounting Height, Heat Throw, Heat Spread (in feet)

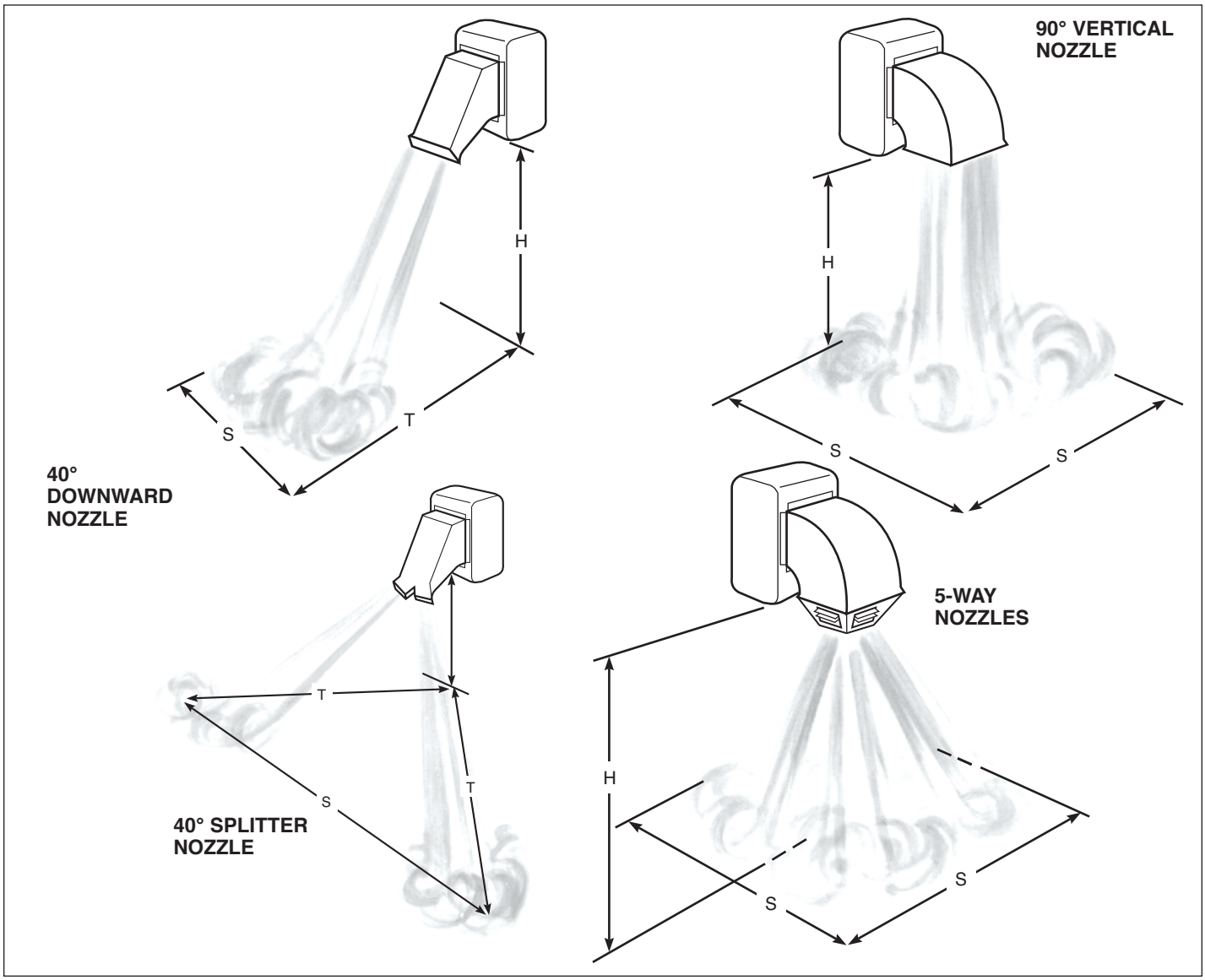

Table 23.1 - Mounting Height, Heat Throw, Heat Spread (in feet)

Nozzle Type		Model Number						
		BDP 150	BDP 175	BDP 200	BDP 250	BDP 300	BDP 350	BDP 400
40° Downward Nozzle	Max. Mounting Ht. (ft.) H	26	25	27	29	31	32	32
	Heat Throw (ft.) T	79	76	81	86	94	96	96
	Heat Spread (ft.) S	26	25	27	29	31	32	32
90° Vertical Nozzle	Max. Mounting Ht. (ft.) H	26	26	24	29	31	32	32
	Heat Spread (ft.) S	26	26	24	29	31	32	32
40° Splitter Nozzle	Max. Mounting Ht. (ft.) H	24	24	23	25	28	30	32
	Heat Throw (ft.) T	60	59	59	62	70	75	80
	Heat Spread (ft.) S	120	118	117	124	140	151	160
5-Way Nozzle	Max. Mounting Ht. (ft.) H	22	21	20	25	26	23	26
	Heat Spread (ft.) S	31	29	28	35	36	32	36

The above table is based on an inlet air temperature of 70°F and an air temperature rise of 55°F. Air deflectors on, 40° and 90° discharge nozzles set perpendicular to the face of the air discharge opening. On 5-way nozzles all air deflectors set perpendicular to floor. Static pressure measured at 0.1" W.C. for 90° nozzle, 0.2" W.C. for 40° downward and 5-way nozzle, and 0.3" W.C. for 40° splitter nozzle. Outlet velocities are approximately 1,750 FPM for the 40° nozzles, 1,000 FPM for the 90° nozzle and 1,300 FPM for 5-way. For motor size, drive and blower rpm refer to page 20. Mounting height measured from bottom of unit.

DIMENSIONAL DATA

Figure 24.1 - Dimensional Drawings - Propeller Units (Model PDP)

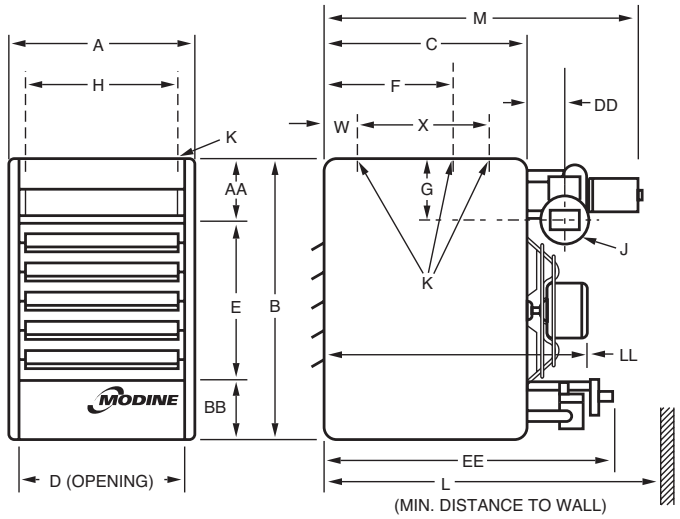

Table 24.1 - Dimensions (inches) - PDP ①

Dimension Symbol	Model Number						
	PDP 150	PDP 175	PDP 200	PDP 250	PDP 300	PDP 350	PDP 400
A	21	23-1/2	25-5/8	25-5/8	28-5/8	33-5/8	40
B	35-1/4	35-1/4	40-1/4	40-1/4	40-1/4	40-1/4	40-1/4
C	22	22	25	25	25	25	25
D	18-9/16	21-1/16	23-3/16	23-3/16	26-3/16	31-3/16	37-1/2
E	20	20	24	24	24	24	24
F	12	12	13-1/2	13-1/2	14	–	–
G	6-9/16	6-9/16	7-1/2	7-1/2	7-1/2	7-1/2	7-1/2
H	17-3/8	19-7/8	22	22	25	30	36-3/8
J	5 ②	5 ②	5 ②	6	6	6	6
K (Mounting Holes) ③	3/8-16	3/8-16	3/8-16	3/8-16	3/8-16	3/8-16	3/8-16
L ④	35-13/16	35-9/16	40-3/4	40-3/4	40-3/4	40-3/4	44-3/16
M	29-13/16	29-9/16	34-3/4	34-3/4	34-3/4	34-11/16	38-3/16
W	–	–	–	–	–	5	5
X	–	–	–	–	–	16	16
AA	8	8	9	9	9	9	9
BB	7-1/4	7-1/4	7-1/4	7-1/4	7-1/4	7-1/4	7-1/4
DD	2-3/4	2-3/4	3-3/8	3-3/8	3-3/8	3-3/8	6-13/16
EE	30-1/2	30-1/2	32-7/8	32-7/8	32-7/8	32-7/8	32-7/8
LL	31-1/8	31-1/8	34-7/8	34-7/8	36-1/4	35-1/2	40-1/2
Gas Connections ⑤	1/2	1/2	1/2	3/4	3/4	3/4	3/4
Fan Diameter	16	18	20	20	22	22	24
Approx. Weight	168	175	239	239	269	338	418

① Do not use propeller units with duct work.

② Vent connection is 5", connected to a factory supplied vent transition. For model sizes 150 and 175, the factory supplied transition is 4" (to the power exhauster outlet) to 5" (to the vent system). For model size 200, the factory supplied transition is 6" (to the power exhauster outlet) to 5" (to the vent system).

③ PDP 150 through PDP 300 - 2 holes (and the level hanging adjustment feature). PDP 350 through PDP 400 - 4 holes. (Listed is the hole diameter and threads per inch to accept threaded rod).

④ Dimension equals overall plus 6".

⑤ For natural gas; may vary depending on control availability.

DIMENSIONAL DATA

Figure 25.1 - Dimensional Drawings - Blower Units (Model BDP)

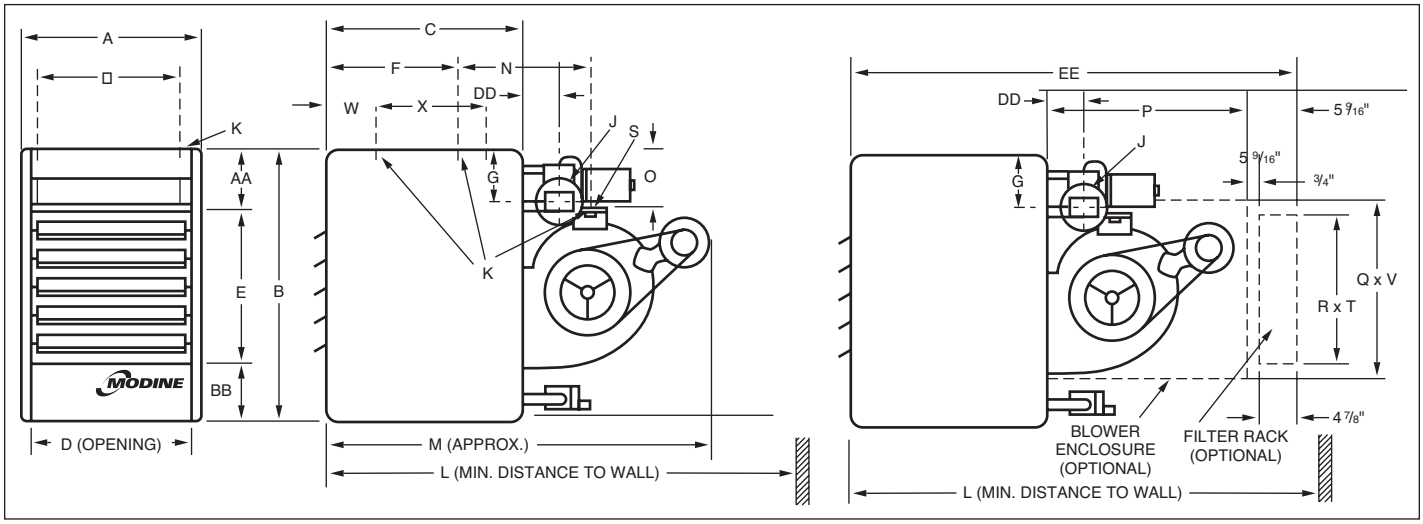

Table 25.1 - Dimensions (inches) - BDP

Dimension Symbol	Model Number						
	BDP 150	BDP 175	BDP 200	BDP 250	BDP 300	BDP 350	BDP 400
A	21	23-1/2	25-5/8	25-5/8	28-5/8	33-5/8	40
B	35-1/4	35-1/4	40-1/4	40-1/4	40-1/4	40-1/4	40-1/4
C	22	22	25	25	25	25	25
D	18-9/16	21-1/16	23-3/16	23-3/16	26-3/16	31-3/16	37-1/2
E	20	20	24	24	24	24	24
F	12	12	13-1/2	13-1/2	14	–	–
G	6-9/16	6-9/16	7-1/2	7-1/2	7-1/2	7-1/2	7-1/2
H	17-3/8	19-7/8	22	22	25	30	36-3/8
J	5 ①	5 ①	5 ①	6	6	6	6
K Mounting Holes ②	3/8-16	3/8-16	3/8-16	3/8-16	3/8-16	3/8-16	3/8-16
L w/ Blwr Encl & Filt Rk	62-5/8	62-5/8	69-5/8	69-5/8	69-5/8	69-5/8	69-5/8
L w/o Blwr Encl & Filt Rk	53-1/8	53-1/8	61	61	61	61	65
M ③	47-1/8	47-1/8	55	55	55	55	59
N ④	21-1/2	21-1/2	25-7/16	25-7/16	24-15/16	17-15/16	22
O	7-1/4	7-1/4	8-1/2	8-1/2	8-1/2	8-1/2	8-1/2
P	30	30	34	34	34	34	34
Q Blower Encl Ht	21-3/8	21-3/8	25-1/8	25-1/8	25-1/8	25-1/8	25-1/8
R Inlet Duct Height	20	20	23-3/4	23-3/4	23-3/4	23-3/4	23-3/4
S Center to Center Blower Mtg. Holes	17-5/16	17-3/8	20-3/8	20-3/8	20-3/8	20-3/8	20-3/8
T Inlet Duct Width	27-1/2	27-1/2	32-3/4	32-3/4	32-3/4	42-7/8	42-7/8
V Blower Encl Width	29	29	34-1/4	34-1/4	34-1/4	44-3/8	44-3/8
W	–	–	–	–	–	5	5
X	–	–	–	–	–	16	16
AA	8	8	9	9	9	9	9
BB	7-1/4	7-1/4	7-1/4	7-1/4	7-1/4	7-1/4	7-1/4
DD	2-3/4	2-3/4	2-3/4	3-3/8	3-3/8	3-3/8	6-13/16
EE	56-5/8	56-5/8	63-5/8	63-5/8	63-5/8	63-5/8	63-5/8
Gas Connections ⑤	1/2	1/2	1/2	3/4	3/4	3/4	3/4
Blower Wheel Diameter	13	13	15	15	15	15	15
Approx. Weight	152	152	315	315	339	428	498

① Vent connection is 5", connected to a factory supplied vent transition. For model sizes 150 and 175, the factory supplied transition is 4" (to the power exhauster outlet) to 5" (to the vent system). For model size 200, the factory supplied transition is 6" (to the power exhauster outlet) to 5" (to the vent system).

② BDP 150 thru BDP 300 — 4 holes (2 on blower and 2 on unit).
BDP 350 and BDP 400 —-6 holes (2 on blower and 4 on unit). (Listed is the hole diameter and threads per inch to accept threaded rod).

③ This is an approximate dimension for standard motors, allow 3" for sheave and optional motors.

④ Distance between mounting hole in unit casing and mounting hole on blower. On the BDP 350 and BDP 400, the distance is from rear mounting hole in casing to the mounting hole on blower.

⑤ For natural gas; may vary depending on control availability.

MAINTENANCE

⚠ WARNING

When servicing or repairing this equipment, use only factory-approved service replacement parts. A complete replacement parts list may be obtained by contacting the factory. Refer to the rating plate on the appliance for complete appliance model number, serial number, and company address. Any substitution of parts or controls not approved by the factory will be at the owner's risk.

⚠ CAUTION

1. Service or repair of this equipment must be performed by a qualified service agency.
2. Do not attempt to reuse any mechanical or electrical controllers which have been wet. Replace defective controller.

NOTE: To check most of the possible remedies in the troubleshooting guide listed in Table 27.1, refer to the applicable sections of the manual.

General Maintenance

The unit and venting system must be checked once a year by a qualified service technician.

All installation and service of these units must be performed by a qualified installation and service agency.

Before any service, BE SURE TO TURN OFF GAS AT THE MANUAL SHUT-OFF VALVE AHEAD OF THE COMBINATION GAS CONTROL AND TURN OFF ALL ELECTRIC POWER TO THE HEATER.

General Unit

When providing annual maintenance for the unit heater, keep the unit free from dust, dirt, grease and foreign matter. Pay particular attention to:

1. The combustion air and exhaust vent piping.
2. The burner ports and pilot burner orifices (avoid the use of hard, sharp instruments capable of damaging surfaces for cleaning these ports). To check the burner port and pilot burner orifice, see "Burner and Pilot Assembly Removal".
3. The air shutters and main burner orifices (avoid the use of hard, sharp instruments capable of damaging surfaces for cleaning these orifices). To check the air shutters and main burner orifices, see for "Manifold Assembly Removal."
4. The heat exchanger. Clean tubes from the bottom with a stiff non-wire brush.
5. The heat exchanger should be checked annually for cracks and discoloration of the tubes. If a crack is detected, the heat exchanger should be replaced before the unit is put back into service. If the tubes are dark gray, airflow across the heat exchanger should be checked to insure that a blockage has not occurred or the blower is operating properly.

Electrical Wiring

The electrical wiring should be checked annually for loose connections or deteriorated insulation.

Gas Piping & Controls

The gas valves and piping should be checked annually for general cleanliness and tightness.

The gas controls should be checked to ensure that the unit is operating properly.

Propeller Assembly

Check the motor for lubrication if the motor is not permanently lubricated. Inspect the fan for damage and fit on motor shaft. Clean any dust, dirt or foreign matter from the fan blades.

Blower Assembly

The blower assembly includes the bearings, drive sheaves and belts. Blower bearings should be checked and lubricated based on the blower manufacturer's recommendations. Bearings should also be checked for any unusual wear and replaced if needed.

Drive sheaves should be checked at the same time the bearings are inspected. Check to make sure the sheaves are in alignment and are securely fastened to the blower and motor shafts.

Belt tension should be rechecked shortly after the unit has been installed to check for belt stretching. After the initial start-up, monthly checks are recommended.

Manifold Assembly Removal

To remove the manifold:

1. Shut off gas and electric supply.
2. Lower bottom pan to expose burner and manifold (see Figure 16.2).
3. Disconnect pilot tubing and thermocouple lead (or ignition cable) at the combination gas control (and ignition control).
4. Disconnect control wires for the combination gas control.
5. Disconnect gas manifold at ground union joint.
6. Remove the 2 screws holding the manifold to the heat exchanger support.
7. Clean the orifices and adjust the air shutters as necessary.
8. Follow steps 2-6 in reverse order to install the manifold assembly.
9. Turn on the electric and gas supply.
10. Check the ground union joint for leaks with a soap solution. Tighten if necessary.

Burner and Pilot Assembly Removal

To remove the burner:

1. Shut off gas and electric supply.
2. Lower bottom pan to expose burner and manifold (see Figure 16.2).
3. Disconnect pilot tubing and thermocouple lead (or ignition cable) at the combination gas control (and ignition control).
4. Remove the 2 burner retaining pins holding the burner in place. The burner can then be easily lowered from the unit.
5. Examine the burner and pilot assembly for cleanliness and/or obstructions as necessary (see "General Unit" for cleaning instructions).
6. Replace the burner assembly in reverse order. In replacing the burner, be certain that the slots at the front of the burner are located properly on their shoulder rivets and that the burner retaining pins are put back into their proper locations.
7. Reconnect the ignition cable and pilot gas supply line.
8. Turn on the electric and gas supply.

SERVICE & TROUBLESHOOTING

Table 27.1 - Troubleshooting

Trouble	Possible Cause	Possible Remedy
Pilot does not light	**1.** Main gas is off. **2.** Power supply is off. **3.** Air in gas line. **4.** Dirt in pilot orifice. **5.** Gas pressure out of proper range. **6.** Pilot valve does not open. a. Defective ignition controller. b. Blown fuse on control board c. Defective gas valve. **7.** No spark at ignitor. a. Loose wire connections. b. Pilot sensor is grounded. c. Blown fuse on control board d. Defective ignition controller. **8.** Safety device has cut power. **9.** Pilot valve is off. **10.** Dirty thermocouple contact. **11.** Excessive drafts. **12.** Pilot orifice Fitting leak.	**1.** Open manual gas valve. **2.** Turn on main power. **3.** Purge gas line. **4.** Check for plugged pilot orifice and clean with compressed air if necessary. **5.** Adjust to a maximum of 14" W.C. Minimum for natural gas - 6" W.C. Minimum for propane gas - 11" W.C. **6.** Check wiring for 24 volts to valve. a. Replace ignition controller. b. Replace Fuse c. Replace gas valve. **7.** a. Check all ignition controller wiring. b. Replace sensor if cracked or worn c. Replace fuse d. Replace ignition controller. **8.** Check all safety devices (High limit, pressure switch, blocked vent safety switch, etc.) Determine and correct problem. Reset if necessary. **9.** Turn gas control knob or lever on combination gas control to pilot position. **10.** Be sure thermocouple contact is clean. If problem persists replace thermocouple. **11.** Find source and re-direct airflow away from unit. **12.** Tighten pilot orifice. Flame impingement on thermocouple may cause thermocouple to become inoperative.
Main burners do not light (Pilot is lit)	**1.** Defective valve. **2.** Loose wiring. **3.** Defective pilot sensor **4.** Defective ignition controller. **5.** Improper thermostat wiring.	**1.** Replace valve. **2.** Check wiring to gas valve. **3.** Replace pilot sensor. **4.** Replace ignition controller. **5.** Verify wiring compared to wiring diagram.
Lifting Flames (See Figure 28.2)	**1.** Too much primary air. **2.** Main pressure set too high. **3.** Orifice too large.	**1.** Reduce primary air. **2.** Adjust to a maximum of 14" W.C. **3.** Check orifice size with those listed on the serial plate.
Yellow Tipping (With propane gas, some yellow tipping is always present.)	**1.** Insufficient primary air. **2.** Dirty orifice. **3.** Misaligned orifice.	**1.** Increase primary air. **2.** Check orifices and clean with compressed air if necessary. **3.** Check manifold, replace if necessary.
Wavering Flames (See Figure 28.1)	**1.** Drafts across burner **2.** Misalignment of burner **3.** Cracked heat exchanger	**1.** Eliminate drafts **2.** Align burner on locator pins **3.** Replace heat exchanger
Flashback	**1.** Too much primary air **2.** Main pressure set too high. **3.** Orifice too large.	**1.** Reduce primary air. **2.** Adjust to maximum of 14" W.C. **3.** Check orifice size with those listed on the serial plate.
Floating Flames (see Figure 28.3)	**1.** Insufficient primary air. **2.** Main pressure set too high. **3.** Orifice too large. **4.** Blocked vent.	**1.** Increase primary air. **2.** Adjust to a maximum of 14" W.C. **3.** Check orifice size with those listed on the serial plate. **4.** Clean/correct venting system.
Flame Rollout (see Figure 28.4)	**1.** Main pressure set too high. **2.** Orifice too large. **3.** Blocked vent.	**1.** Adjust to a maximum of 14" W.C. **2.** Check orifice size with those listed on the serial plate. **3.** Clean/correct venting system.

SERVICE & TROUBLESHOOTING

Trouble	Possible Cause	Possible Remedy
Not Enough Heat	**1.** Unit cycling on high limit. ① a. Obstructions/leaks in duct system. b. Main pressure set too high. c. Blower motor not energized. d. Loose belt e. Blower speed too low. f. Blocked/damaged venting system. g. Air distribution baffle removed (high temperature rise units only). h. Defective high limit switch. **2.** Main pressure set too low. **3.** Too much outside air. **4.** Thermostat malfunction. **5.** Gas controls wired incorrectly. **6.** Unit undersized.	**1.** a. Clean/correct duct system. b. Adjust to a maximum of 14" W.C. c. Check/correct to insure blower motor operates within 45 seconds of when gas controls are energized. d. Adjust belt tension. e. Check/correct blower drive settings for proper rpm. f. Check/correct venting system. g. Replace air distribution baffle. h. Replace high limit switch. **2.** Adjust main gas pressure. Minimum for natural gas — 6" W.C. Minimum for propane gas — 11" W.C. **3.** Adjust outside air damper to decrease outside air percentage (if possible). **4.** Check/replace thermostat. **5.** Check unit wiring against the wiring diagram. **6.** Check design conditions. If unit is undersized, an additional unit(s) or other heat source must be added.
Too Much Heat	**1.** Thermostat malfunction. **2.** Gas controls do not shut-off. a. Gas controls wired incorrectly. b. Short circuit. **3.** Main gas pressure set too high. **4.** Defective gas valve.	**1.** Check/replace thermostat. **2.** a. Check unit wiring against the wiring diagram. b. Check for loose or worn wires. **3.** Adjust to a maximum of 14" W.C. **4.** Replace gas valve.

① Automatic Reset High Limit

The unit heater comes standard with an automatic reset high limit switch that will shut off the gas should the discharge air temperature become excessive. See Figure 18.1, indicator (7) for the location of either the standard automatic high limit switch. The switch should operate only when something is seriously wrong with the unit operation. Anytime the switch operates, correct the difficulty immediately or serious damage may result. If the switch cuts off the gas supply during normal operation, refer to the “Not Enough Heat” section of Service & Troubleshooting.

Figure 28.1 - Wavering Flame or Misalignment

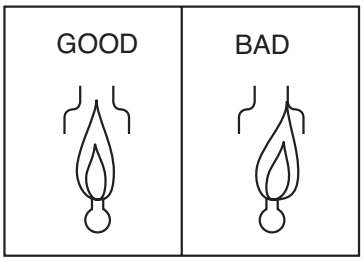

Figure 28.2 - Lifting Flame Condition

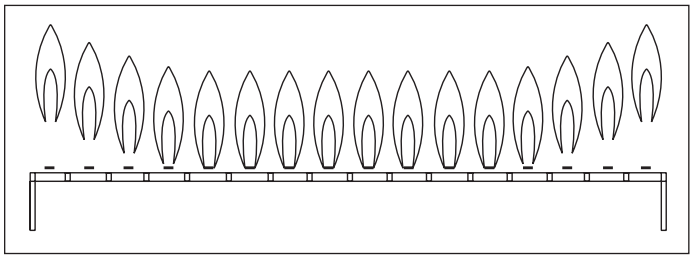

Figure 28.3 - Floating Flame Condition

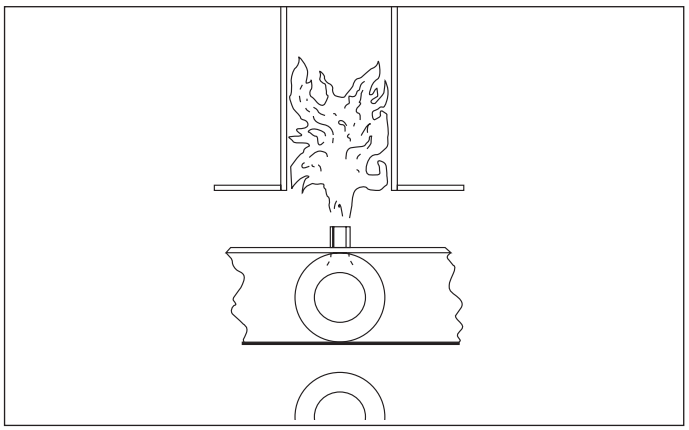

Figure 28.4 - Flame Rollout Appearance

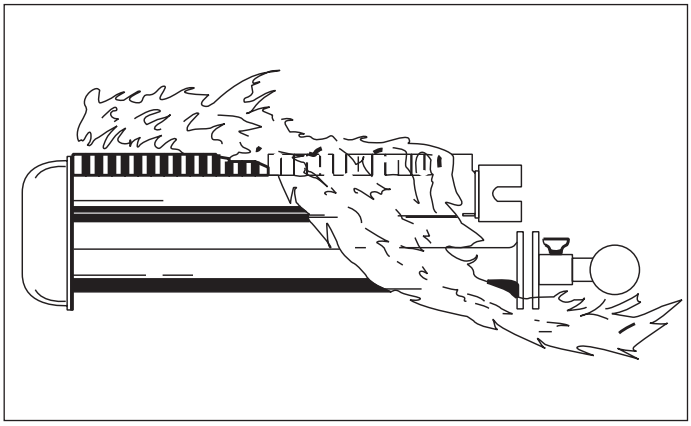

MODEL NUMBER / RATING PLATE IDENTIFICATION

Figure 29.1 - Serial Number Designations

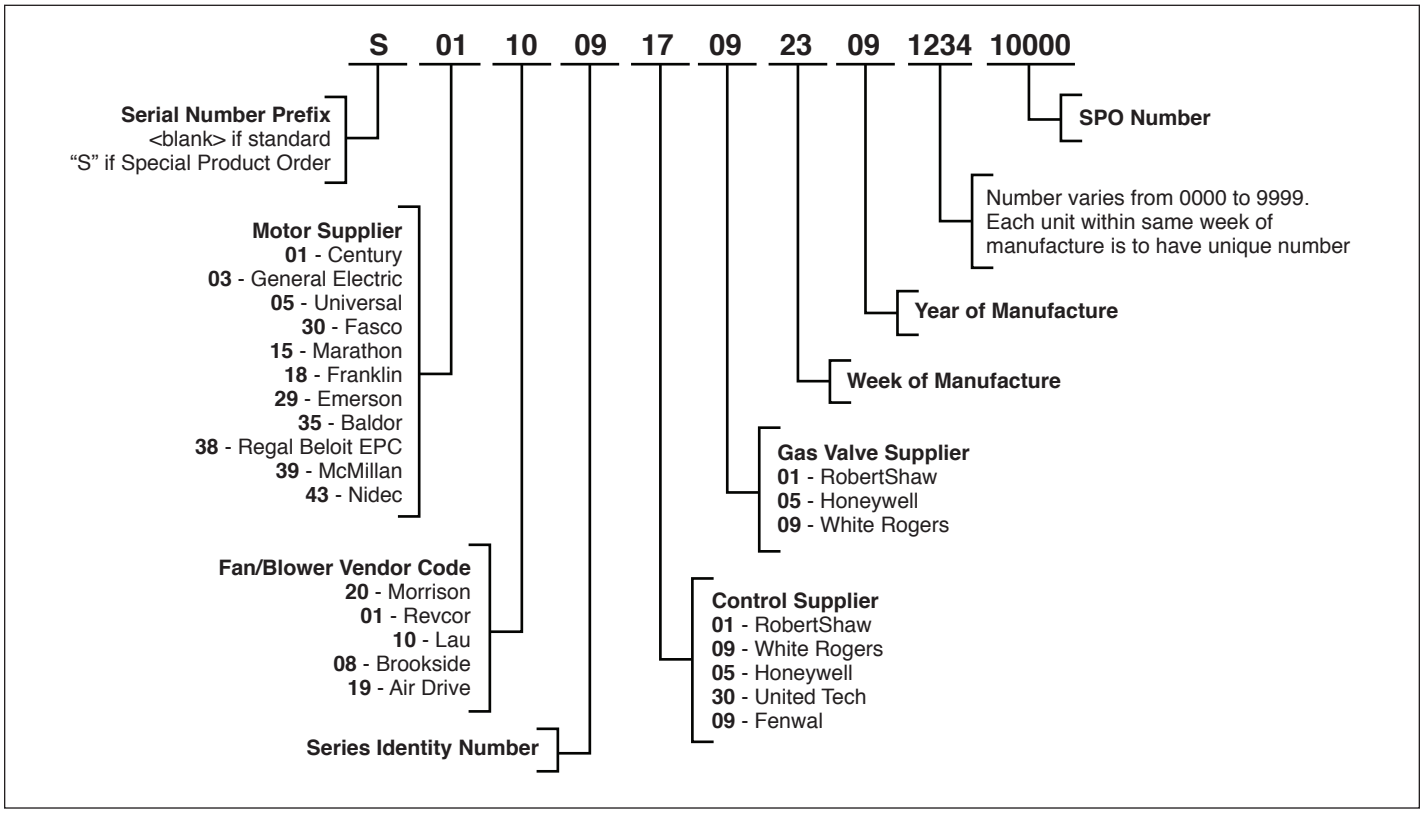

Figure 29.2 - Model Number Designations

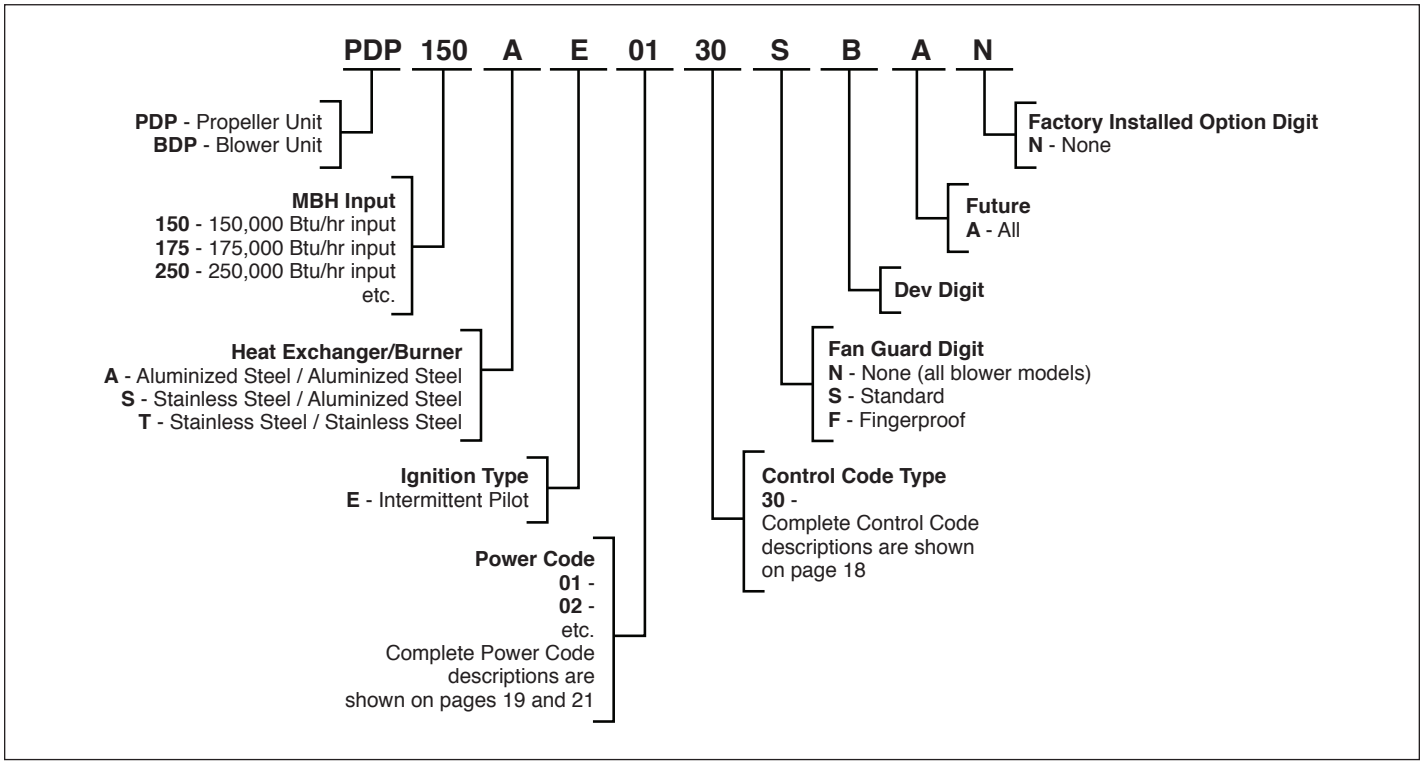

THIS PAGE INTENTIONALLY LEFT BLANK

THIS PAGE INTENTIONALLY LEFT BLANK

COMMERCIAL WARRANTY

Seller warrants its products to be free from defects in material and workmanship, EXCLUSIVE, HOWEVER, of failures attributable to the use of materials substituted under emergency conditions for materials normally employed. This warranty covers replacement of any parts furnished from the factory of Seller, but does not cover labor of any kind and materials not furnished by Seller, or any charges for any such labor or materials, whether such labor, materials or charges thereon are due to replacement of parts, adjustments, repairs, or any other work done. This warranty does not apply to any equipment which shall have been repaired or altered outside the factory of Seller in any way so as, in the judgment of Seller, to affect its stability, nor which has been subjected to misuse, negligence, or operating conditions in excess of those for which such equipment was designed. This warranty does not cover the effects of physical or chemical properties of water or steam or other liquids or gases used in the equipment.

BUYER AGREES THAT SELLER'S WARRANTY OF ITS PRODUCTS TO BE FREE FROM DEFECT IN MATERIAL AND WORKMANSHIP, AS LIMITED HEREIN, SHALL BE IN LIEU OF AND EXCLUSIVE OF ALL OTHER WARRANTIES, EITHER EXPRESS OR IMPLIED, WHETHER ARISING FROM LAW, COURSE OF DEALING, USAGE OF TRADE, OR OTHERWISE, **THERE ARE NO OTHER WARRANTIES, INCLUDING WARRANTY OF MERCHANTABILITY OR FITNESS FOR PURPOSE, WHICH EXTEND BEYOND THE PRODUCT DESCRIPTION CONFIRMED BY BUYER AND SELLER AS OF THE DATE OF FINAL AGREEMENT.**

This warranty is void if the input to the product exceeds the rated input as indicated on the product serial plate by more than 5% on gas-fired and oil-fired units, or if the product in the judgment of SELLER has been installed in a corrosive atmosphere, or subjected to corrosive fluids or gases, been subjected to misuse, negligence, accident, excessive thermal shock, excessive humidity, physical damage, impact, abrasion, unauthorized alterations, or operation contrary to SELLER'S printed instructions, or if the serial number has been altered, defaced or removed.

BUYER AGREES THAT IN NO EVENT WILL SELLER BE LIABLE FOR COSTS OF PROCESSING, LOST PROFITS, INJURY TO GOODWILL, OR ANY OTHER CONSEQUENTIAL OR INCIDENTAL DAMAGES OF ANY KIND RESULTING FROM THE ORDER OR USE OF ITS PRODUCT, WHETHER ARISING FROM BREACH OF WARRANTY, NONCONFORMITY TO ORDERED SPECIFICATIONS, DELAY IN DELIVERY, OR ANY LOSS SUSTAINED BY THE BUYER.

BUYER'S REMEDY FOR BREACH OF WARRANTY, EXCLUSIVE OF ALL OTHER REMEDIES PROVIDED BY LAW, IS LIMITED TO REPAIR OR REPLACEMENT AT THE FACTORY OF SELLER, ANY COMPONENT WHICH SHALL, WITHIN THE APPLICABLE WARRANTY PERIOD DEFINED HEREIN AND UPON PRIOR WRITTEN APPROVAL, BE RETURNED TO SELLER WITH TRANSPORTATION CHARGES PREPAID AND WHICH THE EXAMINATION OF SELLER SHALL DISCLOSE TO HAVE BEEN DEFECTIVE; EXCEPT THAT WHEN THE PRODUCT IS TO BE USED BY BUYER AS A COMPONENT PART OF EQUIPMENT MANUFACTURED BY BUYER, BUYER'S REMEDY FOR BREACH, AS LIMITED HEREIN, SHALL BE LIMITED TO ONE YEAR FROM DATE OF SHIPMENT FROM SELLER. FOR GAS-FIRED PRODUCTS INSTALLED IN HIGH HUMIDITY APPLICATIONS AND UTILIZING STAINLESS STEEL HEAT EXCHANGERS, BUYER'S REMEDY FOR BREACH, AS LIMITED HEREIN, SHALL BE LIMITED TO TEN YEARS FROM DATE OF SHIPMENT FROM SELLER.

These warranties are issued only to the original owner-user and cannot be transferred or assigned. No provision is made in these warranties for any labor allowance or field labor participation. Seller will not honor any expenses incurred in its behalf with regard to repairs to any of Seller's products. No credit shall be issued for any defective part returned without proper written authorization (including, but not limited to, model number, serial number, date of failure, etc.) and freight prepaid.

OPTIONAL SUPPLEMENTAL WARRANTY

Provided a supplemental warranty has been purchased, Seller extends the warranty herein for an additional four (4) years on certain compressors. Provided a supplemental warranty has been purchased, Seller extends the warranty herein for an additional four (4) years or nine (9) years on certain heat exchangers.

EXCLUSION OF CONSUMABLES & CONDITIONS BEYOND SELLER'S CONTROL

This warranty shall not be applicable to any of the following items: refrigerant gas, belts, filters, fuses and other items consumed or worn out by normal wear and tear or conditions beyond Seller's control, including (without limitation as to generality) polluted or contaminated or foreign matter contained in the air or water utilized for heat exchanger (condenser) cooling or if the failure of the part is caused by improper air or water supply, or improper or incorrect sizing of power supply.

Component Applicable Models	**"APPLICABLE WARRANTY PERIOD"**
Heat Exchangers Gas-Fired Units	TEN YEARS FROM DATE OF FIRST BENEFICIAL USE BY BUYER OR ANY OTHER USER, WITHIN TEN YEARS FROM DATE OF RESALE BY BUYER OR ANY OTHER USER, WITHIN TEN YEARS FROM DATE OF RESALE BY BUYER IN ANY UNCHANGED CONDITION, OR WITHIN ONE HUNDRED TWENTY-SIX MONTHS FROM DATE OF SHIPMENT FROM SELLER, WHICHEVER OCCURS FIRST
Heat Exchangers Low Intensity Infrared Units **Compressors** Condensing Units for Cassettes	FIVE YEARS FROM DATE OF FIRST BENEFICIAL USE BY BUYER OR ANY OTHER USER, WITHIN FIVE YEARS FROM DATE OF RESALE BY BUYER OR ANY OTHER USER, WITHIN FIVE YEARS FROM DATE OF RESALE BY BUYER IN ANY UNCHANGED CONDITION, OR WITHIN SIXTY-SIX MONTHS FROM DATE OF SHIPMENT FROM SELLER, WHICHEVER OCCURS FIRST
Burners Low Intensity Infrared Units **Other** Components excluding Heat Exchangers, Coils, Condensers, Burners, Sheet Metal	TWO YEARS FROM DATE OF FIRST BENEFICIAL USE BY BUYER OR ANY OTHER USER, WITHIN TWO YEARS FROM DATE OF RESALE BY BUYER IN ANY UNCHANGED CONDITION, OR WITHIN THIRTY MONTHS FROM DATE OF SHIPMENT FROM SELLER, WHICHEVER OCCURS FIRST
Heat Exchangers/Coils Indoor and Outdoor Duct Furnaces and System Units, Steam/Hot Water Units, Oil-Fired Units, Electric Units, Cassettes, Vertical Unit Ventilators, Geothermal Units **Compressors** Vertical Unit Ventilators, Geothermal Units **Burners** High Intensity Infrared Units **Sheet Metal Parts** All Products	ONE YEAR FROM DATE OF FIRST BENEFICIAL USE BY BUYER OR ANY OTHER USER, WITHIN ONE YEAR FROM DATE OF RESALE BY BUYER IN ANY UNCHANGED CONDITION, OR WITHIN EIGHTEEN MONTHS FROM DATE OF SHIPMENT FROM SELLER, WHICHEVER OCCURS FIRST

As Modine Manufacturing Company has a continuous product improvement program, it reserves the right to change design and specifications without notice.

© Modine Manufacturing Company 2014

Modine Manufacturing Company
1500 DeKoven Avenue
Racine, WI 53403
Phone: 1.800.828.4328 (HEAT)
www.modinehvac.com

DR SERIES HIGH INTENSITY

SUBMITTAL DATA GAS-FIRED INFRARED SPACE HEATERS

SUBMITTED BY: _____ DATE: _____

JOB TITLE: _____ CONTRACTOR: _____

ADDRESS: _____ PHONE #: _____

CITY: _____ ADDRESS: _____

STATE: _____ ZIP: _____ CITY: _____

STATE: _____ ZIP: _____

ENGINEER: _____

LOCAL REPRESENTATIVE: _____

NOTES: _____

QTY.		MODEL #	TAG	INPUT BTU/h (Indicate Gas Type) ☐ NATURAL GAS	☐ PROPANE GAS	CERAMIC OPERATING TEMP.	SQ. IN. of RADIATING SURFACE	TYP. OR RCMD. MOUNTING HEIGHTS (Standard Reflector)	NET WEIGHT	CONTROL VOLTAGE (See Page 2) 120V	24V	Millivolt
		DR 30		30,000	30,000	1780° F	85	12' to 14'	18 lbs.			
		DR 30(S)		30,000	30,000	1780° F	85	12' to 14'	18 lbs.			
		DR 45		45,000	45,000	1660° F	170	12' to 14'	27 lbs.			
		DR 50		50,000	50,000	1690° F	170	12' to 14'	27 lbs.			
		DR 55		55,000	55,000	1740° F	170	13' to 15'	27 lbs.			
		DR 60		60,000	60,000	1780° F	170	14' to 16'	27 lbs.			
		DR 75		75,000	75,000	1690° F	255	15' to 17'	36 lbs.			
		DR 80		80,000	80,000	1720° F	255	15' to 17'	36 lbs.			
		DR 85		85,000	85,000	1750° F	255	16' to 18'	36 lbs.			
		DR 90		90,000	90,000	1780° F	255	16' to 18'	36 lbs.			
		DR 95		95,000	N/A	1800° F	255	17' to 19'	36 lbs.			
		DR 100		100,000	N/A	1810° F	255	17' to 20'	36 lbs.			
		DR 130		130,000	120,000	1810° F	340	21' to 24'	45 lbs.			
		DR 160		160,000	145,000	1810° F	425	24' to 28'	54 lbs.			

DETROIT RADIANT PRODUCTS CO.

RE-VERBER-RAY® INFRARED RADIANT HEATERS

21400 Hoover Rd.
Warren, MI 48089-3162

Phone: (586) 756-0950
Toll Free: (800) 222-1100
Fax: (586) 756-2626
Email: sales@drp-co.com
Website: www.detroitradiant.com

VISIT OUR WEBSITE FOR:

- Product Specs
- Parts Support
- Dealer Locator
- Applications
- CAD/Revit Library
- Design Guidelines
- Theory of Infrared
- and More!

DR SPECIFICATIONS

NORMAL MANIFOLD PRESSURE
- Natural Gas - 6 inches W.C.
- Propane Gas - 10 inches W.C.

MINIMUM HEATER INLET PRESSURE
- Natural Gas - 7 inches W.C.
- Propane Gas - 11 inches W.C.

MAXIMUM INLET PRESSURE
- 1/2 lb. or 14 inches W.C.

VA DRAW
- 24V - 12.0
- 120V - 12.0

MOUNTING
- 20° to 35° from horizontal
- Optional - Horizontal parabolic reflector (specify size) to emulate 0-15° angle.

INLET PIPE SIZE
- 1/2" NPT

MOUNTING HOLE DIAMETER
- 5/16"

AMPS
- 24V - 0.48
- 120V - 0.10

⚠ WARNING

NOT FOR RESIDENTIAL USE.

Do not use this heater in the home, sleeping quarters, attached garages, etc.

CONTROL Nat.	CONTROL L.P.	CONTROL VOLTAGE	CONTROL DESCRIPTION
NMV-2	PMV-2	Millivolt	Manual Ignition, Constant Pilot, 100% Shutoff, Self-energizing wire & thermostat.
NFS-2	PFS-2	120V or 25V	Direct Spark Ignition, 100% Shutoff.

All spark models include potted circuitry for use in high moisture applications.

CLEARANCES TO COMBUSTIBLES (IN INCHES)

MODEL NO.	SIDES	BACK	TOP	BELOW/ FRONT
DR 30	30	18	28	72
DR 30(S)	30	18	28	72
DR 45	30	18	28	72
DR 50	30	18	34	72
DR 55	32	18	40	72[1]
DR 60	32	18	40	72[1]
DR 75	48	30	42	98
DR 80	48	30	42	98
DR 85	48	30	42	98
DR 90	48	30	42	98
DR 95	48	30	52	120
DR 100	48	30	52	120
DR 130	48	30	52	120
DR 160	50	32	60	132

[1] Clearance is 80 in. when heater is fitted with a parabolic reflector.

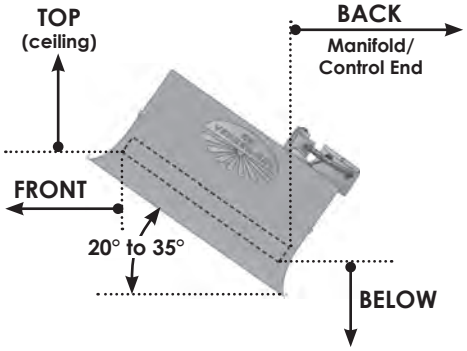

CLEARANCES TO COMBUSTIBLES DIAGRAM: SIDE VIEW

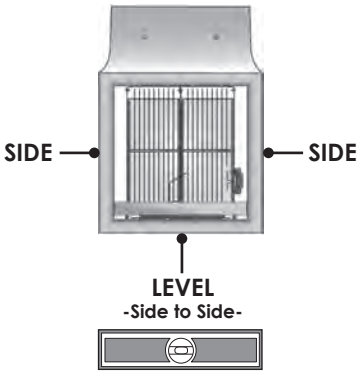

CLEARANCES TO COMBUSTIBLES DIAGRAM: FRONT VIEW

⚠ WARNING

In locations used for the storage of combustible materials, signs must be posted to specify the maximum permissible stacking height to maintain the required clearances from the heater to the combustibles. Signs must either be posted adjacent to the heater thermostats or in the absence of such thermostats in a conspicuous location.

If vehicles are parked below the heater or lifts are present, ensure that these clearances will be maintained from the highest raised vehicle.

Failure to comply with the stated clearance to combustibles could result in personal injury, death and/or property damage.

Read and understand the installation, operation and maintenance manual prior to installing or servicing this unit.

FIELD DATA

DIMENSIONAL INFORMATION

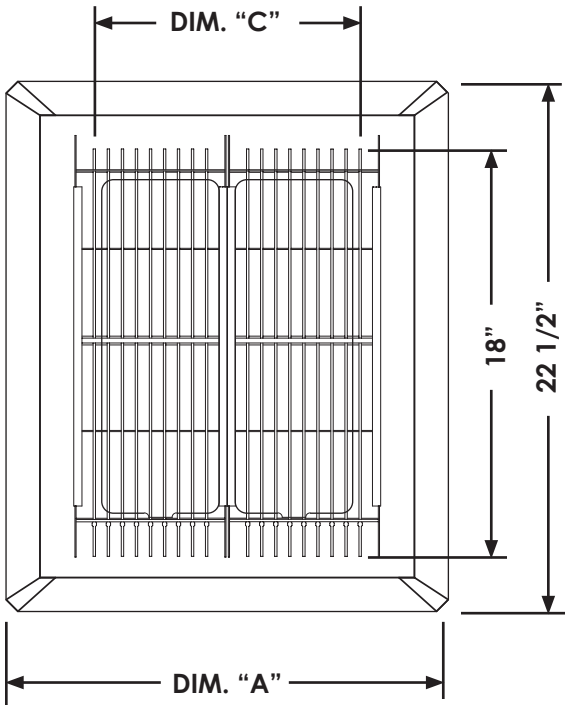

FRONT/REAR

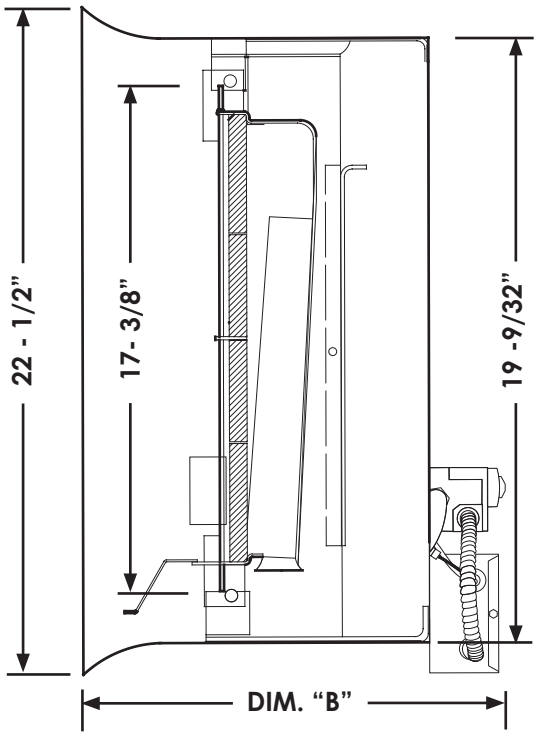

SIDE VIEW

MODEL NO.	HEATER WIDTH DIM "A"	HEATER DEPTH DIM "B"	RAYHEAD WIDTH DIM "C"
DR 30, 30(S)	12 ¾"	14 ¼"	5"
DR 45, 50, 55, 60	19 ⅛"	15 ¼"	11 ½"
DR 75, 80, 85, 90, 95, 100	26 ⅝"	15 ¼"	18"
DR 130	32"	15 ¼"	21"
DR 160	38 ½"	15 ¼"	27 ½"

OPTIONAL ACCESSORIES

QTY.	PART NO.	DESCRIPTION	NOTES
	DRCS	Chain mounting set	5' chain set with 4 "S" hooks. Preset mounting angle of 30°.
	DR#HPR	Horizontal parabolic reflector	Directs rays directly downward. Can be used for matching horizontal mounting specifications.
	DR#PR	Full parabolic reflector	Directs rays in a more focused pattern. Typically used in high mounting applications.
	DR#PRSC	Full parabolic reflector with screen	Directs rays in a more focused pattern. Outer screen protects ceramic grids from objects striking the heater.
	DR#SC	DR heater screen	Screen slips on the outside of the reflectors and protects the ceramic grids.
	PLQ	Warning plaque	Hung below heater, restates the clearance to combustible warning.

= Specify Number : 1 = DR 30; 2 = DR 45-60; 3 = DR 75-100; 4 = DR 130; 5 = DR 160

WRITTEN SPECIFICATIONS

HEATER PARAMETER/SPECIFICATIONS

- High Intensity Infrared Heaters shall be **Re-Verber-Ray® DR SERIES**, as manufactured by Detroit Radiant Products Company, Warren, MI 48089.
- High Intensity Infrared Heaters shall be Designed Certified by CSA.
- The manufacturer shall provide a published warranty covering the heater's ceramic burner for a period of five (5) years and all components utilized in the heater control assembly for a period of one (1) year.
- High Intensity Infrared Heaters shall be designed to operate when burning natural gas having a heat value of 1025 BTU per cubic foot with a specific gravity of 0.62, or when burning propane gas having a heat value of 2500 BTU per cubic foot with a specific gravity of 1.53.
- The ceramic burner face shall operate at a temperature range of 1660 degrees F to 1810 degrees F and shall incorporate a secondary re-radiating surface of stainless steel rods to obtain optimum operating temperature and radiant output.
- The manufacturer shall have a minimum of 30 years of manufacturing experience producing high intensity infrared heaters.

HIGH INTENSITY INFRARED HEATER BURNER CONTROLS

- Heaters shall be equipped with one of the following control systems:

☐ Standing Manual Pilot System with 100% safety shut-off of pilot and main burner in case of pilot outage, operating with no external electrical connection but on milli-voltage generated by the pilot flame (NMV-2 or PMV-2).

☐ Direct Spark Ignition System with direct spark ignition of the main burner through a solid state ignition module operating a spark electrode. Loss of power causes 100% safety shut-off of main burner(s). System operates on 120 or 24 volts (NFS-2 or PFS-2).

HIGH INTENSITY INFRARED HEATER CONSTRUCTION

- The heater reflector housing shall be constructed of one-side bright polished aluminum. The emitter shall be composed of a perforated ceramic tile on which combustion takes place on the surface. The burner plenum shall be constructed of aluminized steel of one-piece drawn construction. The heater shall be of a modular design employing multiple burners to achieve the specified input.
- The venturi is constructed of stainless or aluminized steel.
- The secondary re-radiating rods shall be constructed of high temperature stainless steel alloy placed in close proximity of the ceramic burner face.
- Parabolic reflectors shall be used when units are installed in high mounting applications or when focusing of the infrared heating pattern is desirable.
- Protective screens shall be used in facilities where debris may damage the heater.

TYPICAL WIRING DIAGRAMS

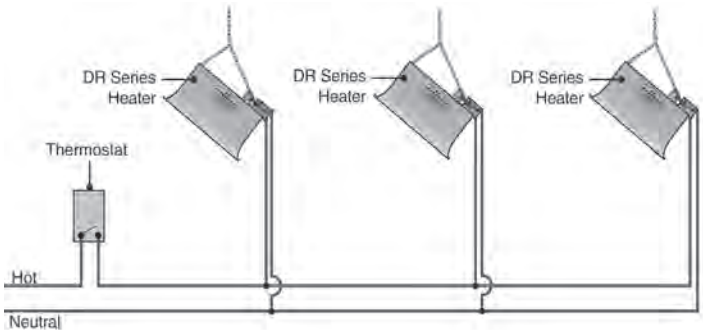

Figure 1
Typical 120-volt units with 120V thermostat

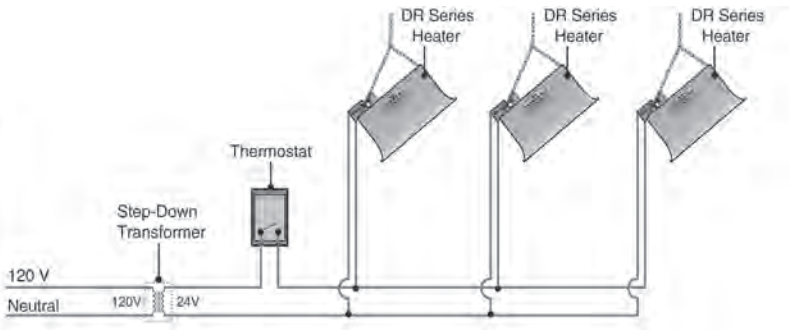

Figure 2
Typical 24-volt units with 120/24V transformer and 24V thermostat.

NOTE: Local codes may require than an exhauster is interlocked with the thermostat.

NOT AN
EXIT

) TO 65 (36) 0.50 (.125)

NLY: THIS APPLIANCE EQUIPPED ONLY FOR ALTITUDES 0-4,500FT
.370M) CET APPAREIL EST EQUIPE POUR DES ALTITUDES
MAPRIS ENTRE 0 ET 4,500 PIEDS (0-1370M) SEULEMENT.
CHANGE IN ORIFICE SIZE OR ADJUSTMENT TO MANIFOLD PRESSURE
QUIRED, THE INPUT RATING BELOW:
QUN CHANGEMENT DANS LA DIMENSION DE L'ORIFICE OU AJUSTMENT
LA PRESSION DU COLLECTEUR N'EST REQUIS, VALEUR NIMINALE
ENTREE CI-APRES:

TITUDES/ALTITUDES	INPUT BTU/H/ DEBIT (KW)	
000 FT (0-610M)	100,000	(29.31)
2001-4500 FT (610-1370M)	90,000	(26.38)

CENTRAL FURN

CAN/CGA-2.3-M91

NOTICE

CLEMCO

10 Cuft Classic Blast Machines

High-performance, versatile blast cleaning system removes contamination, corrosion, mill scale, and coatings from most surfaces. Produces a uniform surface texture, and creates a surface profile to increase bonding for coatings.

Model 3661 holds 10 cubic feet of abrasive.

Requirements for Operation
These items are required but not included with this equipment:

- Clean, dry, compressed air of sufficient volume to maintain desired pressure at the nozzle. Refer to Air Consumption Chart in Blast Off 2 booklet (publication stock no. 09294).
- Minimum of 50 psi needed to close the pop-up valve and pressurize the blast machine.
- OSHA-required remote control system that interrupts blasting if operator should lose control of the nozzle when blast machine is pressurized.
- NIOSH-approved, type CE, supplied-air respirator.
- Grade D breathing-air supply as defined by Compressed Gas Association Commodity Specification: G-7.1 (Refer to www.cganet.com).
- Abrasive blast media specifically marketed for abrasive blasting and appropriate for your application.
- Appropriate blast suit, work boots, hearing and eye protection.

Description of Operation
The operator controls blasting from a remote control handle at the nozzle. Pressing the handle starts blasting; releasing it stops blasting. The blast machine contains abrasive and meters it into the compressed air stream.

Advantages

- Stationary industrial-quality blast machines manufactured to ASME code.
- 1-1/4-inch piping allows up to 50 percent more air flow when compared with 1-inch piping.
- Industrial-quality valves, piping and fittings designed to maximize air flow and minimize energy required to operate the system.
- FSV abrasive metering valve maintains smooth, consistent, adjustable media flow.

Approvals and Certifications
Clemco's quality management system is ISO 9001-2008 certified.

Blast machine pressure vessel built to American Society of Mechanical Engineers (ASME) specifications for 125-psi working pressure. Vessel is hydrostatically tested and National Board-certified.

Remote control system complies with OSHA regulation 1910.244 (b).

Clemco's Classic machines are available in capacities 1/2 to 20 Cuft.

Available Literature:
23339 - Classic Blast Machines and Remote Controls
24186 - 0.5 Cuft Classic Blast Machine System
24187 - 1 Cuft Classic Blast Machine System
24879 - 3 Cuft Classic Blast Machine System
24880 - 6 Cuft Classic Blast Machine System
21117 - Sentinel Abrasive Metering Valve
21957 - RLX Remote Control Handles (Pneu & Electric)
21968 - Blast Machine Screens & Covers

 ©2014 Clemco Industries Corp.

CLEMCO manufactures a comprehensive line of sandblast equipment - CLEMCO sandblasting equipment

camfil
AIR POLLUTION CONTROL

FARR GOLD SERIES®

Scan to see video about the making of the Remembering Tree.

The Remembering Tree, a vision of sustainability

Created by Kelly Stevens, artist and Farr Gold Series® production welder, this metal sculpture stands 30 feet (9.2 meters) tall in front of the Jonesboro, AR, USA factory. This artistic sculpture represents Camfil APC's dedication to the environment, our employees, customers, vendors, stakeholders, and to the future of cleaning up factories around the world.

Cleaning up the workplace, for today… and tomorrow.

Saving energy and increasing production efficiency while controlling indoor air quality is a challenging aspect of plant management. Dust collectors–whether used for pollution control or product recovery–can impact all these areas. Camfil Air Pollution Control (APC) can help solve your dust problems.

camfilcairing

Getting Greener

Camfil adheres to the values and principles of sustainable development and has established an organization to develop and maintain sustainable business practices. "Camfilcairing", which is basically a way of packaging all our industry-leading green initiatives into a comprehensive global program within Camfil. We believe firmly in being a sustainable supplier. We also believe it will be a requirement for the future. We aim to be the best in sustainability. It will not require a major effort – green is in our genes.

Mission Statement

SPEED SAFETY SERVICE WOW

WHAT WE DO:

- **We will** clean dust, mist and fumes from factories, making them safer and more productive.

HOW WE DO IT:

- **We will** ship collectors fast while still giving the customer what they want.
- **We will** be the most customer and rep friendly company in the air pollution control business.
- **We will** make the best dust and mist collectors in the business from an end user operation and maintenance viewpoint.

Green Your Factory

Our goal at Camfil APC is to be green, starting with the environmental benefits of our products. We help our customers go green by stopping thousands of different pollutants from entering the workspace air and the outside air. We also build our equipment to last, so less waste is created over time. Our HemiPleat technology has revolutionized the air pollution control industry by delivering very high efficiency in a filter that lasts twice as long as competitive products. It contributes to sustainability while saving energy. Even the paint on our Farr Gold Series® collector is green, and not just the color: We use an environmentally friendly powder painting process so no VOCs are emitted. Furthermore, premium efficiency motors are standard on the fans we supply. We are constantly launching green initiatives. We look forward to working with you to "green" your factory.

Farr Gold Series® Collectors Come With a 12 YEAR WARRANTY

Camfil APC guarantees our dust collectors to meet applicable local, state and federal emission control standards. Whether exhausting outside (EPA compliance) or recirculating (OSHA compliance), Camfil APC can solve your dust problems.

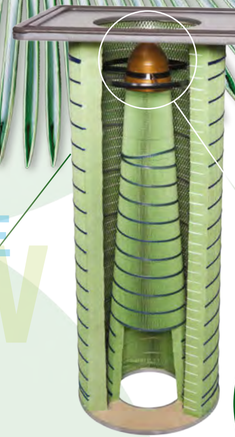

HEMIPLEAT®
SAVING YOU MONEY

The HemiPleat® will improve the performance of any cartridge dust collector…***guaranteed.***

Power up your dust collector with HemiPleat! This statement comes from the fact that with lower pressure drop HemiPleat filters, you can pull more air with less energy, thus capturing pollutants better. Filtration efficiencies exceed 99.99% at 0.5 micron size particles. The air coming out of a Farr Gold Series dust collector with HemiPleat filters has been tested to exceed the air quality required in most hospital operating rooms!

GOLD CONE® FILTER TECHNOLOGY INSIDE

Gold Cone Filter

The patented Gold Cone filter has allowed many facilities to reduce the number of filters they have to use and change. The innovative cone of filter media expands the usable area of the filter allowing a reduction in the number of filters by at least a third. The design has also led to long filter life with low pressure drop.

DURAPleat®
The **MOST** Durable Filter Media.

The ultimate in a green filter! The DuraPleat is fully washable and reusable. We have customers that have 5-year-old DuraPleat filters and counting. This all synthetic filter handles the most rigorous applications and temperatures.

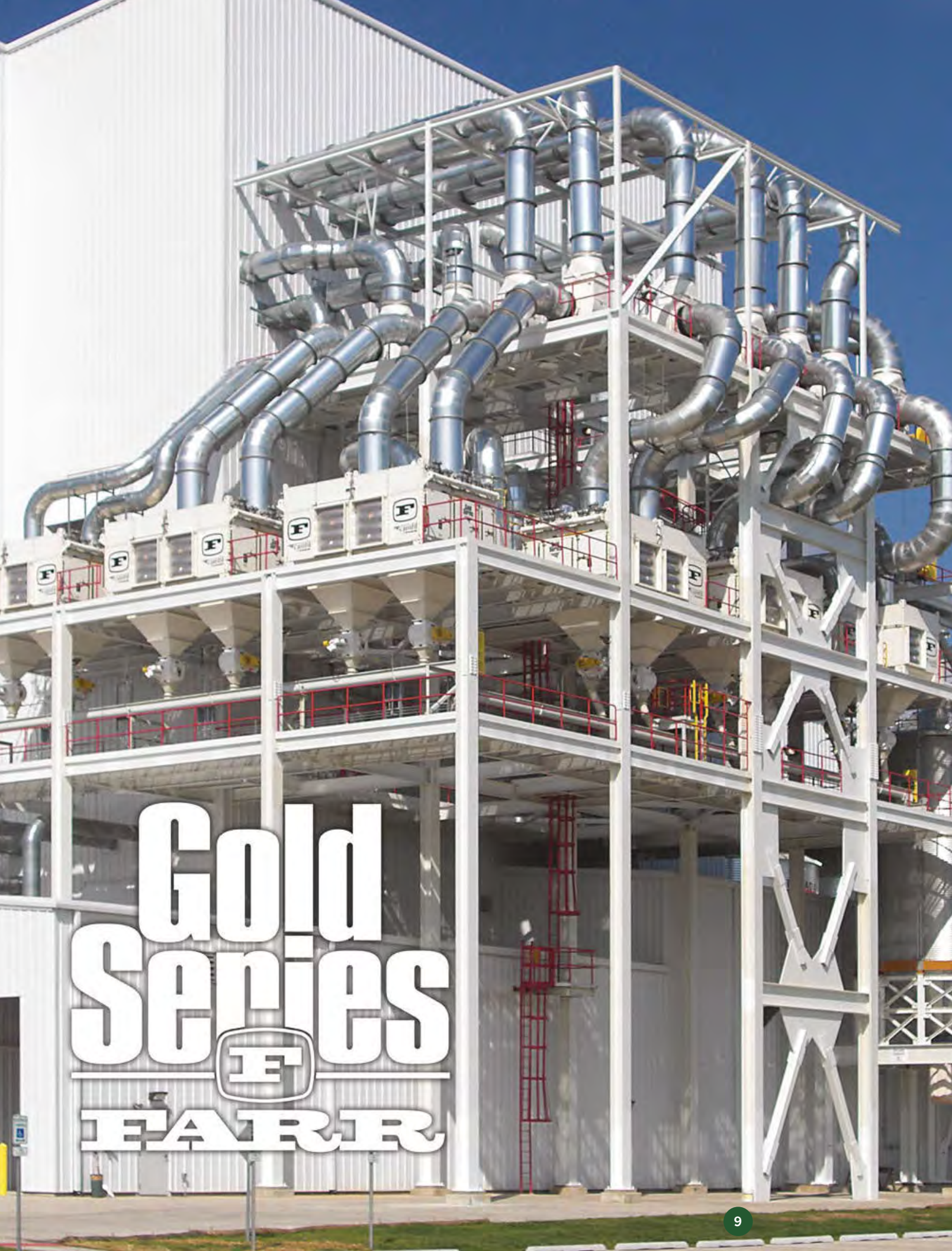
Gold
Series
F
FARR

Everything makes dust...

Ship abrasive blasting

Scan to see more Farr Gold Series® installations.

Pharmaceutical dust

Indoor flameless explosion venting

Paper dust with return air abort gate

Thermal Spray with spark trap module

Weld smoke ventilation

Pharmaceutical dust

Typical Applications:

- Abrasive Blasting
- Chemical Processing
- Fiberglass/Composites
- Food/Sugar
- Foundry
- Grinding
- Mining
- Nuisance Dust Ventilation
- Paper Scrap Systems
- Pharmaceutical
- Plasma/Laser Cutting
- Powder/Bulk Materials
- Powder Painting/Pigments
- Seed Processing
- Shot Peening
- Thermal Spray
- Welding Smoke/Fume
- Wood Processing

Farr Gold Series with HEPA integrated Safety Monitoring Filter (iSMF)

Paper shredding/recycling

GS48 with skirting on plasma cutting

The Farr Gold Series® cleans it up

Superior performance features with exceptional ease of installation and service make the Farr Gold Series the ultimate choice for a clean workplace.

Pharmaceutical dust with bag-in bag-out (BIBO) filter change-out

Bronze foundry

Wood dust

Ore crusher at major copper mine

Thermal spray with integrated HEPA and vertical explosion venting

Any Color You Want!

Tunnel mining skid package

OEM laser cutting fume

Ore storage bin vent

The Heart of the Farr Gold Series®

HEMIPLEAT®
SAVING YOU MONEY

The Most Advanced Dust Collector Filter Ever Made

- Poly-Tech™ media's filtration efficiency is 99.99% on 0.5 µm and larger particles.
- The Farr Gold Series® meets the 5 mg/m^3 or less emissions requirement to recirculate air back on non-hazardous dusts, in most cases.

The HemiPleat cartridge uses optimal pleat spacing with synthetic glue beads to hold the pleats open. HemiPleat breathes more air with less energy and increases the cleaning effectiveness of the reverse pulse, thus resulting in a lower pressure drop.

HemiPleat Green · proprietary blend of cellulose and polyester fibers with a moisture resistant silicone treatment
HemiPleat Flame Retardant · proprietary blend of cellulose and polyester fibers with a flame retardant treatment
HemiPleat Carbon Impregnated · proprietary blend of cellulose and polyester fibers impregnated with carbon for static dissipation
HemiPleat Synthetic · 100% synthetic filter media for washability and moisture resistance over cellulose.

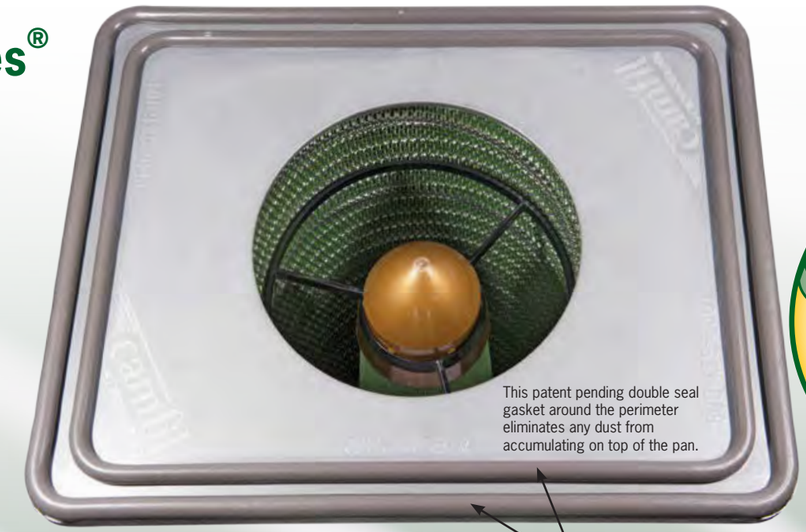

Scan to learn more about HemiPleat.

Gold Cone Double Seal Urethane Gasket

Gold Cone® Cartridge

- Vertically mounted to shed dust readily for efficient cleaning and longer service life.
- Features a cone in the center of the cartridge, expanding the usable media in the filter by 25%.
- Test results indicate that this new pulse distribution method provides enhanced cleaning.
- More efficient operation, longer cartridge life and reduced service requirements.

HEMIPLEAT® eXTREME

The HemiPleat eXtreme filter is the ultimate in dust collection filtration, bringing home the highest degree of efficiency and filter life on the market. The HemiPleat eXtreme uses our proven HemiPleat technology and base media with proprietary nano fibers applied to the media surface for extreme results. These nanofibers can be applied to any of our base medias above.

Cellulose Polyester Blend

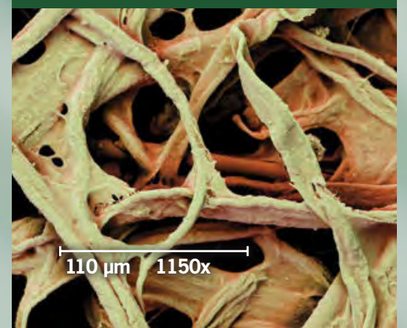

Cellulose Polyester Blend with eXtreme Coating

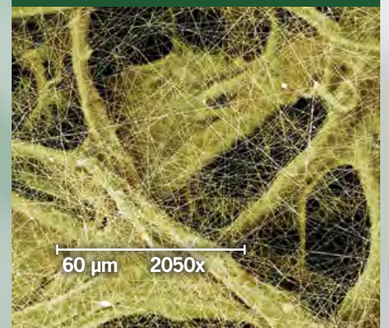

New Technology

Old Technology

The HemiPleat's high quality uniform pleat pack establishes the superiority of this cartridge over all other products in the market. The difference in pleating quality can be seen here in a comparison against the media pack with typical industry pleats. Notice the difference in pleat spacing and alignment.

Gold Series
F
FARR
Looks Like a Safe Because It's
BUILT LIKE A SAFE™
NEED TO RE-ORDER
need service?
camfil
www.camfilapc.com
800-479-6801
Gold Series
F
FARR
Looks Like a Safe Because It's
BUILT LIKE A SAFE™
NEED TO RE-ORDER
need service?
camfil
www.camfilapc.com
800-479-6801

Easy Filter Change-out

Scan to watch filter change-out video.

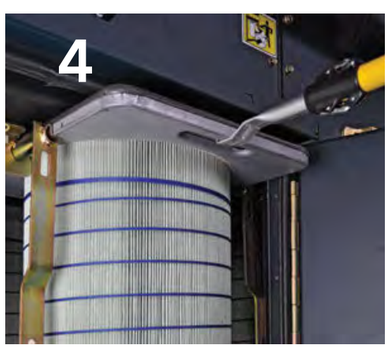

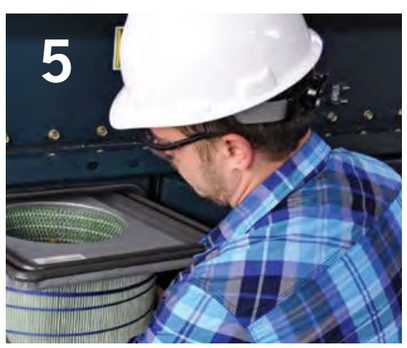

Farr Gold Series offers modular design for optimum flexibility–delivered fast!

"We are very happy with the Camfil APC dust collector. The dust collection solution was purchased for our CNC plasma cutter to replace a horizontal cartridge dust collector due to short filter life. The current filters have been in for over a year and still look great and are operating on less than 3" pressure drop. Also, the Camfil APC people have been a pleasure to do business with."

— Dan Schuler, Schuler Manufacturing

High Entry Inlet
Cross flow is created through the filters. This eliminates upward "can" velocities associated with traditional hopper inlets.

Farr Gold Series® Features

- Modular design for optimum flexibility–have it your way fast!
- Each module accommodates airflows up to 5,000 cfm
- Module constructed of 7 gauge carbon steel
- Door, hopper, inlet and panels are all 10 gauge steel
- Powder painted for unsurpassed corrosion resistance
- Component configurations are virtually unlimited
- Vertical design of cartridges enables efficient pulse cleaning of dust

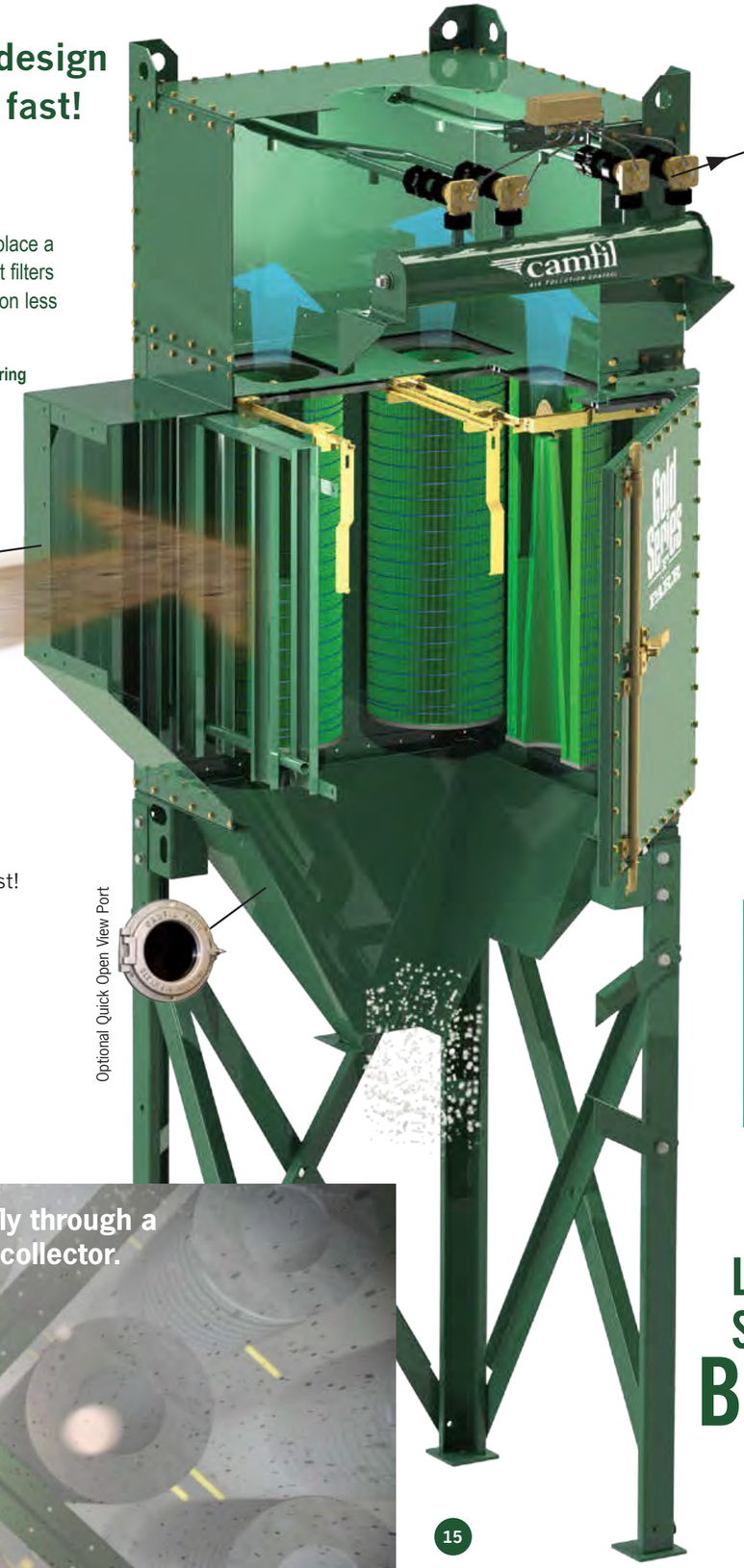

Powerful Cleaning System to Provide Long Filter Life

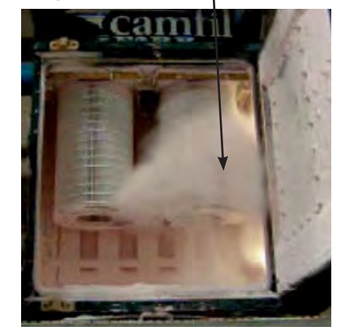

Pulse Discharge of Gold Cone Filter

Scan to watch filter pulse video.

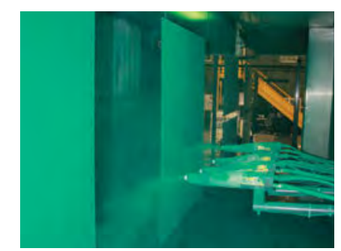

Individually Powder Coated
Farr Gold Series components are individually powder coated prior to assembly for superior corrosion resistance.

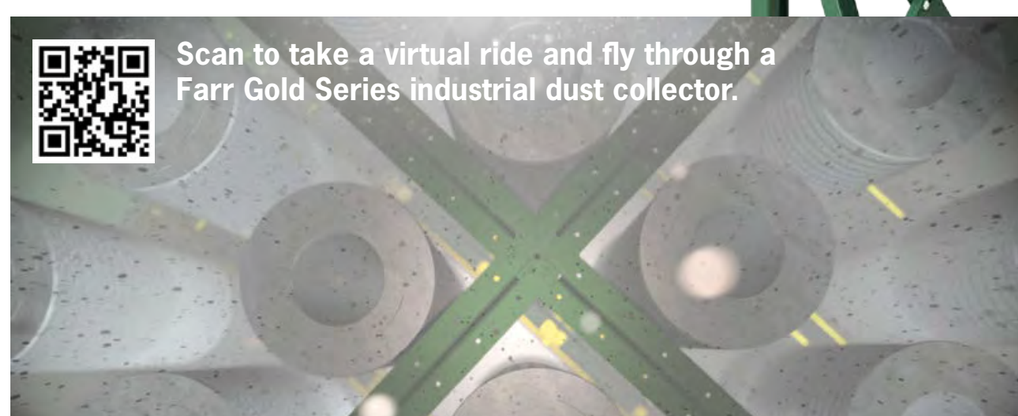

Looks Like a Safe Because It's Built Like a Safe

Farr Gold Series® Hopper Options

Low Boy

Low Pro

Standard

Large Pyramid

Other hopper options available include drawer kit, trough hopper with screw conveyor, and continuous liner discharge.

Farr Gold Series® Models

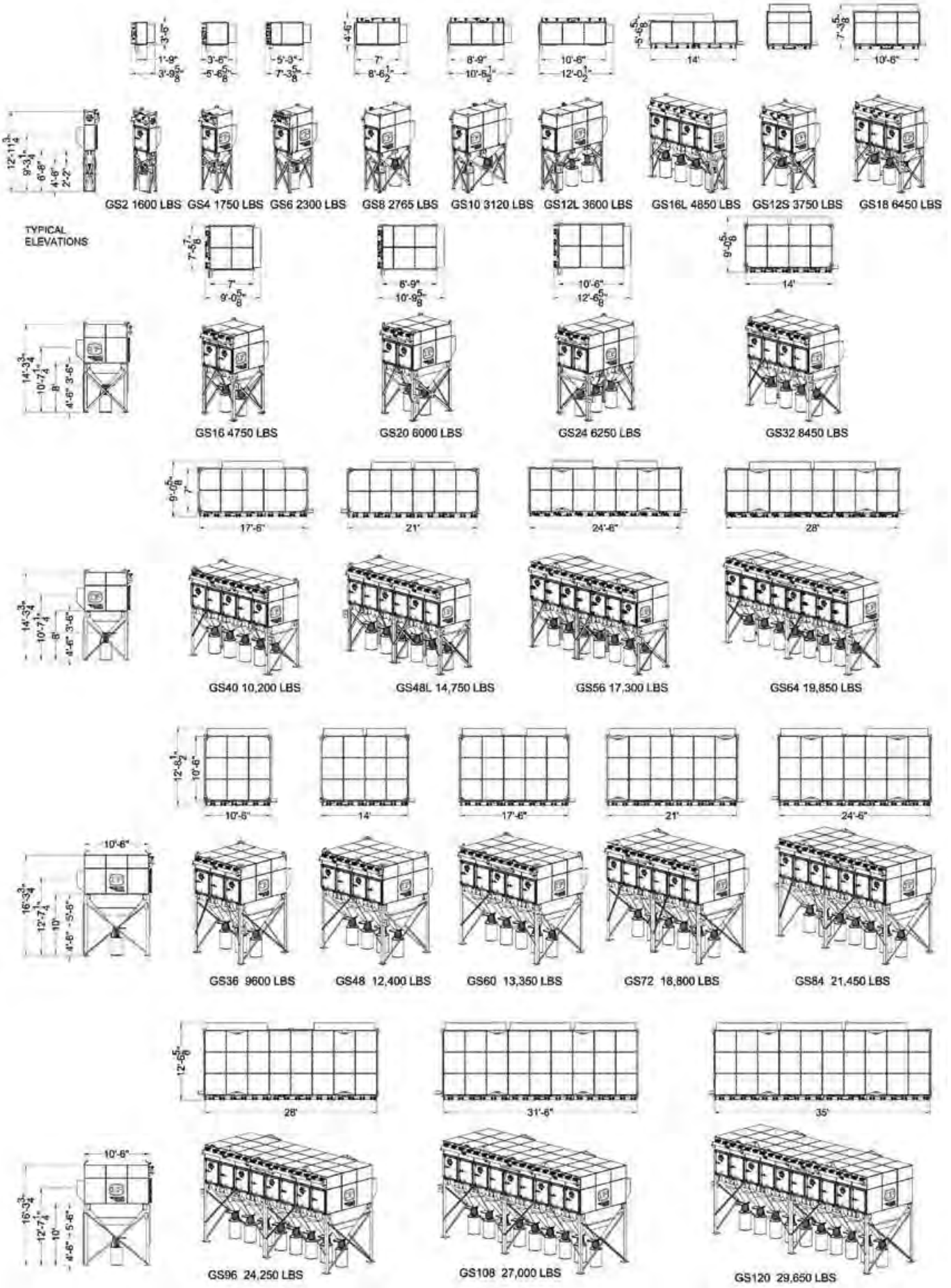

Model # Code

GS 24
- 24 — # of cartridges
- GS — Gold Series

Standard hopper arrangements shown. See opposite page for other hopper options.

NFPA COMPLIANT

Combustible Dust Collection Systems

Inlet Protection

Fast-Acting Valve

Designed to close within milliseconds of detecting an explosion, the fast-acting valve installs in either inlet and/or outlet ducting. The fast-acting valve creates a mechanical barrier within the ducting, which effectively isolates pressure and flame fronts (from either direction) from being able to propagate further through the process.

OR

Inlet/Outlet Chemical Isolation

Designed to react within milliseconds of detecting an explosion, a chemical isolation system can be installed in either inlet and/or outlet ducting. The chemical isolation system creates a chemical barrier that suppresses the explosion within the ducting, reduces the propagation of flame through the ducting and minimizes pressure increases within connected process equipment.

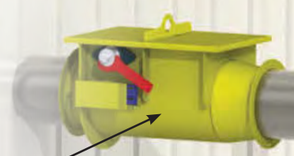

OR

STINGER™ Patent Pending

The Stinger was designed to be installed in the inlet ducting. The Stinger utilizes a mechanical barrier that is held open by the process air and is slammed shut by the pressure forces of the explosion. When closed, the mechanical barrier isolates pressure and flame fronts from being able to propagate further up the process stream.

Detect and Suppress

These systems protect the dust collector from ignition sources such as sparks or embers. It detects them and activates a suppression system that extinguishes them before they reach the collector.

Explosion Venting Sequence

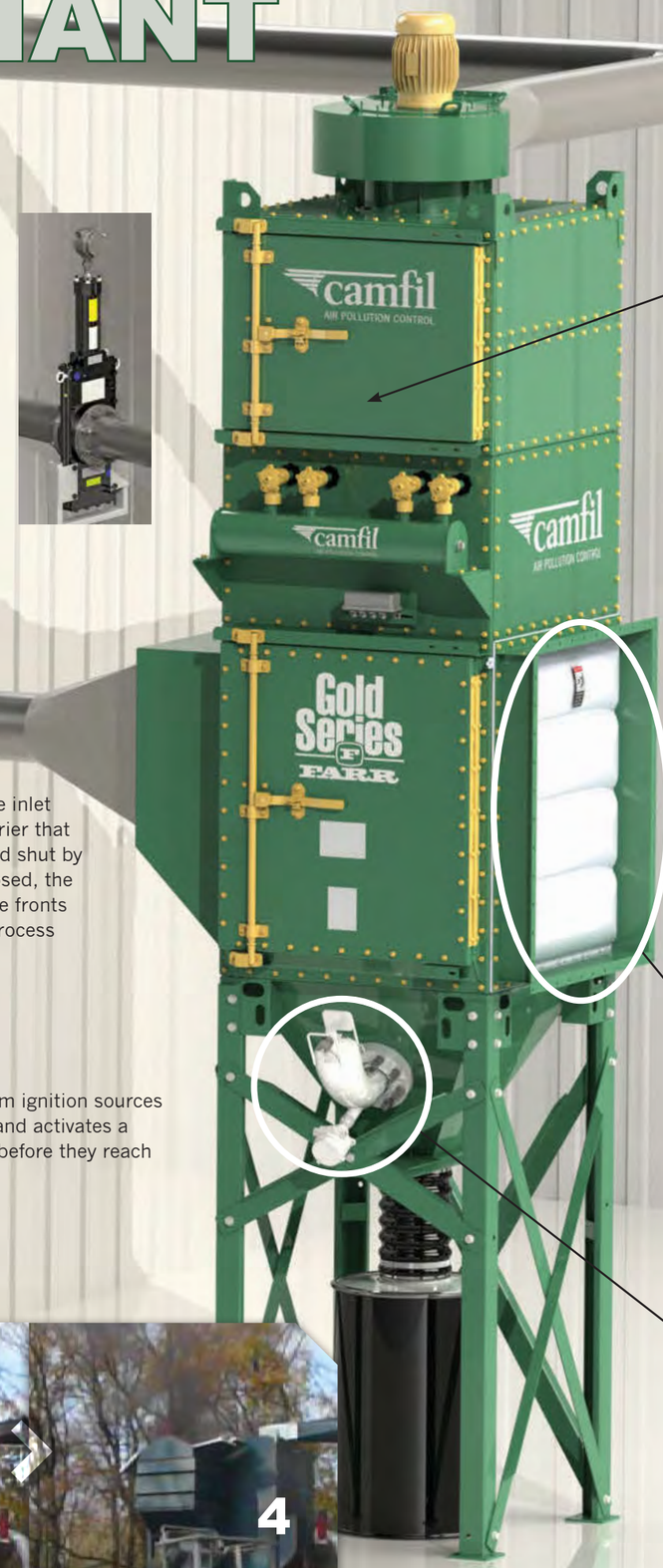

Outlet Protection

Integrated Safety Monitoring Filter (Patent Pending)

The iSMF has been proven to isolate the downstream equipment from the progression of a flame front during an explosion. The Farr Gold Series dust collector with an integrated Safety Monitoring Filter allows you to recirculate exhaust air back into the work space when your dust is explosive. The key advantage of this device is that it prevents the transmission of explosive dust (fuel) from the collector.

OR

High Speed Abort Gates

High speed abort gates are designed to divert process air and/or smoke to a safe location outside when a possible ignition source is detected entering the dust collection system or when a fire is detected. Its primary purpose is to protect the inside of the building from burning debris, embers or smoke. Can be installed in either inlet and/or outlet ducting.

Explosion Venting

Explosion Vent

Designed to be the "weak" link of the vessel, explosion vents open when predetermined pressures are reached inside the dust collector allowing the overpressure and flame fronts to exit to a safe area. Explosion vents minimize damage to the dust collector caused by overpressure created by a deflagration. Camfil APC's standard explosion vents are ATEX certified and NFPA compliant.

OR

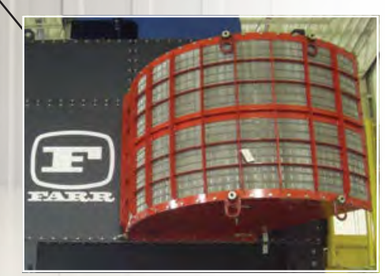

Flameless Vent

Designed to install over a standard explosion vent, the "FlamQuench SQ" extinguishes the flame front exiting the vented area not allowing it to exit the device. This allows conventional venting to be accomplished indoors where it could otherwise endanger personnel and/or ignite secondary explosions.

OR

Chemical Suppression

Designed to react within milliseconds of detecting an explosion, a chemical suppression system is installed in the collectors dirty air section. The chemical suppression system prevents expanding a deflagration by releasing a chemical agent. This system is often used in order to put combustible dust collectors inside the factory where you can't vent to the outside.

Farr Gold Series® Controls

Automatic Filter Cleaning and Energy Saving Motor Controls

GSC Controller

Our touch screen controller with energy efficient modes of operation. The software provides a flat menu structure that allows access to the most common parameters with the fewest number of button clicks. The language and units are easily changed to accommodate 8 different languages. The advanced section has multiple inputs that can trigger alarms for multiple external sensors and devices. A USB port is provided for software updates. A key advantage of the new touchscreen is that only two wires have to be run between the touchscreen and the pulse solenoids, regardless of the solenoid quantity.

GoldLink

GoldLink™ is your anytime access to the diagnostics of your dust collection system. GoldLink monitors 4 preset analog inputs and 16 preset digital inputs to keep you informed on your operation. GoldLink sends multiple users messages when critical set points are reached insuring your manufacturing facility is safer and more productive. GoldLink can be included in any Camfil integrated control panel or retro-fit to systems already installed.

Smart Solenoid Controller

Camfil APC introduces a new cost saving innovation. The timer controls for pulsing the solenoids are now embedded with the solenoids so you no longer have to wire a remote timer board to the solenoid tray. The ON and OFF times of the solenoids are easily adjusted through dials integrated into the solenoid tray.

FDC Controller

This controller's flexible design allows it to be adapted to many dust collector configurations.

Custom GS Controller

VFD Controller

The timer controller with Variable Frequency Drive (VFD) option provides complete control of the blower during and after startup. It has all the necessary functions for a controlled start of the Farr Gold Series without the high current loads typically associated with blowers during startup. It also provides the ability to control the blower's speed resulting in the greatest energy savings and process functionality.

Integrated Dust Collector (IDC) Controller with Smart Start

Farr Gold Series® Options

Pharmaceutical Options

Bag-In Bag-Out (BIBO)

Butterfly Valve

Continuous Liner Discharge

Mining Options

Top Hand Rails

UHMW Mining Inlet Baffle

Slurry Tank for Conveying Dust

Copper Tubing and Diaphragm Maintenance Valve

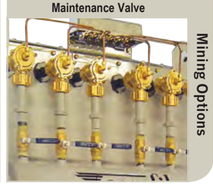

Gold Cone Media Options

Green Moisture Resistant Media

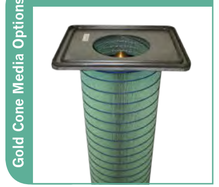

Fire Retardant Media

Carbon Static Electricity Conductive Media

Synthetic Washable Media

Fire and Explosion Protection

Integrated Safety Monitoring Filter

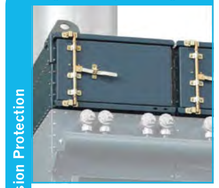

Sprinklers

Explosion Vent

Explosion Vent With Blast Plate

Vertical Explosion Vent

Flameless Explosion Vent

Stinger Backdraft Damper

Chemical Suppression System

Hopper Discharge Options

GS Skirt

Auger Screw Conveyor

Self Dumping Hopper

Clean Sweep

Heavy Duty Cast Rotary Airlock

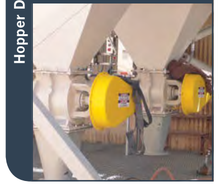

Fabricated Flex Tip Airlock for Fibrous Dust

Cast Rotary Airlock

Dust Briquetter

Inlet Options

Drop Out Module

Channel Baffles

Abrasion Resistant Inlet

GoldLink

Advanced Monitoring Options

GoldLink™ is your anytime access to the diagnostics of your dust collection system.

Fans

Top Mount Fan

Side Mount Fan

Ground Mount Fans

Fan Silencer

Extended Options

Low Pro Hopper Quick Seal

GS Drum Kit with Slide Gate

Pulse Header Silencer

GS High Vacuum

Fully Insulated Collector

Stainless Steel

Remote Safety Monitoring Filter

Broken Bag Detector

Collector Stiffening

Compressed Air Regulator

Custom Structural Steel

Quad Pulse Technology

Custom OEM Designs

Inspection View Port

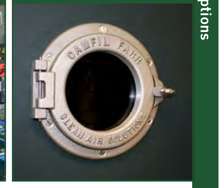

Heat Exchanger for Exhaust Gas That Cannot be Recirculated

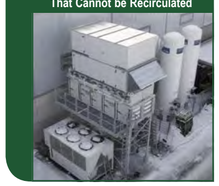

Gold Cone Overbags for Fibrous Dust

Platform and Ladder

Bin Vent

Ducting Designs

Ambient Weld Smoke Collection

Source Fume Collection

Source Capture Dust

Source Capture Foundry

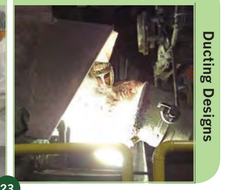

Typical Farr Gold Series® Shipment

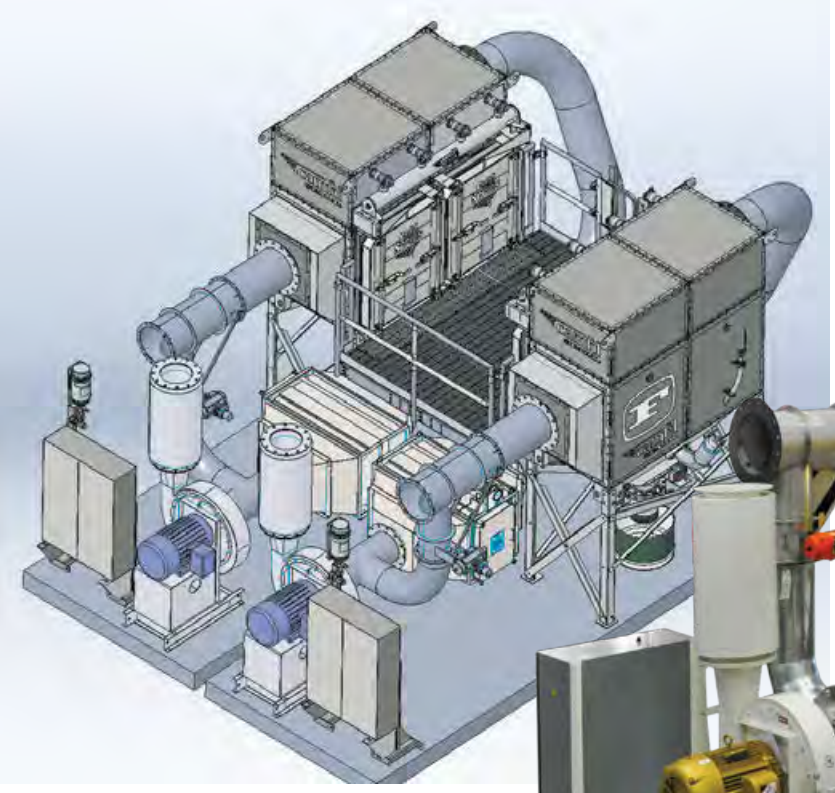

Custom Preassembled Skid Mounted Dust Collection System

If local site labor and engineering is expensive or scarce, we can fully engineer and preassemble a complete skid mounted package for plug-and-play installation. The units pictured here meet all applicable NFPA codes for combustible dust and are safe for hazardous pharmaceutical compounds.

Camfil APC Farr Gold Series Product Overview

Farr Gold Series® Collectors

- Modular design for flexibility
- Heavy duty construction
- Gold Cone™ HemiPleat® filters
- Component configurations are virtually unlimited

GS Camtain® Collectors

- Pharmaceutical and hazardous dust applications
- Bag In Bag Out (BIBO) safe change containment systems
- Independently surrogate tested for containment performance

GS1QP Quad Pulse

GS High Vacuum

- Vessel strength: 17 in Hg vacuum, 8 PSI positive pressure
- 2 and 4-cartridge models
- Use as central vacuum system, positive or negative product receiver or high pressure bin vent

Cyclone Separators

- High efficiency centrifugal particulate separators
- Excellent as prefilters to large cartridge collector systems in many applications

GSM4 Mini Systems

- Self-contained systems for 1,000 to 2,000 CFM applications
- Fully assembled and prewired unit includes fan, controls, motor starter, filters and cleaning system

Zephyr® III Portables

- Three-stage filtration
- For welding fumes, grinding dusts
- 700 CFM at capture hood
- Heavy duty fume arm is free of obstruction inside

GSP Packaged Systems

- Smoke and dust collector for CNC laser and plasma cutters
- Fully assembled and prewired unit - just plug it in!
- Fan rated 2,500 CFM at 10" w.c.

GS-Mini™ Portables

- Single cartridge dust collector
- Mini solution for sub 500 CFM applications where you want a dedicated dust collector for one process machine or as a bin vent

Efficient Fan Motors

- Fan provided with premium efficient "E" motor
- Non-overloading backward inclined fan wheels with standard supplied integrated damper

Controls

- FDC Controller
- Motor Starters
- VFD's
- Custom Controls

GoldLink

GoldLink™ is your anytime access to the diagnostics of your dust collection system.

HemiPleat® Filters

- High performance filtration with Multiple media options
- State-of-the art pleat spacing
- Size for nearly all industrial dust collector brands

Gold Cone™

- Lower pressure drop
- Enhanced cleaning for more efficient operation
- Excellent energy performance

HemiPleat® 0val

- Improves performance of existing dust collector
- Greater media utilization
- More effective cleaning and lower pressure drop

DuraPleat®

- Handles difficult dust applications
- Exceptionally rugged, long lasting
- Washable media may be reused in many applications

© Camfil APC/ Farr Gold Series brochure/ 02.09.16 .15144

World's Largest Dust, Mist and Fume Collector Factory

25 acres - 280,000 sq. feet of factory space!

Gold Series

FARR

50,000 square foot state-of-the-art manufacturing facility in Heywood, Lancashire, United Kingdom

Looks Like a Safe Because It's

BUILT LIKE A SAFE™

DUST AND FUME PROBLEMS SOLVED

scan to visit

www.camfilapc.com

Camfil APC | 3505 S. Airport Road, Jonesboro, AR 72401
870-933-8048 | e-mail: filterman@farrapc.com | 800-479-6801

FARR Air Pollution Control!
(http://www.globalspec.com/supplier/profile/CamfilAPC?comp=3154&sqid=0)

Gold Series® -- GS20

Product Details
in: Air Filters (industrial)

View/Download Supplier's Datasheet (/pdf/viewpdf?partId={66142AAF-D93D-4FC3-ADA2-92107D13CBB6}&comp=3154&from=detail&vid=168741)

Get More Info on Supplier's Site (/GoTo/GoToWebPage?Context=Part:Gold+Series%26%23174%3B+--+GS20&gotoURL=http%3A%2F%2Fwww.farrapc.com%2Fproducts%2Fgold-series%2F&gototype=TocPartWebPage&VID=168741&Comp=3154&OemId=0)

Camfil APC

3505 South Airport Road
Jonesboro, AR 72401 USA
Phone:
(870) 933-8048
(800) 479-6801
Fax:
(877) 910-2981 (870) 933-8381
Business Type: Manufacturer

Supplier Website (http://www.globalspec.com/Goto/GotoWebPage?gotoUrl=http%3A%2F%2Fwww%2Efarrapc%2Ecom%2F&gotoType=webHome&VID=168741)

Save Supplier (javascript:void(0);)

List your products or services on Engineering360 (http://www.globalspec.com/Email/ListYourProducts?comp=0)

Product Overview

Share Via Email (#)

Print This Page (javascript:void())

Save Product (javascript: void(0);)

The Gold Series® cartridge dust and fume collector combines enhanced performance with ease of service while cleaning the work environment of irritating dust and fumes. The Gold Series cartridge dust and fume collector may be used for a wide range of pollution control and product recovery applications.

The Gold Series is the next generation dust collector, building on 25 years of experience with Farr APC's Tenkay® dust collector.

Enhanced performance features with exceptional ease of installation and service make the Gold Series the ultimate choice for a clean workplace.

Featuring the Gold ConeTM in the center of the cartridge, cleaning is accomplished by pulse waves that emanate outward from this inner cone providing enhanced cleaning for more efficient operation, longer cartridge life and reduced service requirements.

In most cases, the Gold Series meets the 5mg/m3 or less emissions requirement for non-hazardous dusts to recirculate the air back into the workplace.

Meeting airflow requirements with a 25% smaller housing allows the Gold Series to deliver premium performance at a competitive price and take up less factory floor space. The service benefits are numerous offering faster, trouble-free change-out of cartridges.

The Gold Series, along with other Farr APC dust collectors, are manufactured in our facility in Jonesboro, AR .

View Less (javascript:void(0);)

Specifications (javascript:void(0);)

Product Category	Air Filters (industrial)
Applications	Pharmaceutical
Construction	Bag Filters; Cartridge (Frame / Assembly)
Performance Specs	
Efficiency	99.99 %
Airflow	5000 SCFM (8499 m³/hr)
Dimensions	
Length	120 inch (3048 mm)
Height	172 inch (4362 mm)
Width / Ring	84 inch (2134 mm)
Frame / Assembly Material	Steel
Features	Pleated

Similar Products

(/SpecSearch/PartSpecs?partId={B5FDBC69-B25E-4179-B63F-39889F7160D5}&comp=315
Ecoflex Air Pollution Control Membranes - Pleated Pulse Jet Laminates -- TG1000
(/SpecSearch/PartSpecs?partId={B5FDBC69-B25E-4179-B63F-39889F7160D5}&comp=315
TTG Inc.

(/SpecSearch/PartSpecs?partId={A07FB949-B92A-471D-9A82-C2AB51B42D29}&comp=31
1612092
(/SpecSearch/PartSpecs?partId={A07FB949-B92A-471D-9A82-C2AB51B42D29}&comp=31
RS Components, Ltd.

HEILIND Performance. Trust. Innovation
(/SpecSearch/PartSpecs?partId={7E758E03-9654-49F2-95F9-8313920FE2B5}&comp=315
Fan Filter 06 Series -- 06325-B
(/SpecSearch/PartSpecs?partId={7E758E03-9654-49F2-95F9-8313920FE2B5}&comp=315
Heilind Electronics, Inc.

See All Suppliers (/SpecSearch/Suppliers?comp=3154&qid=0)

For more information:

(/pdf/viewpdf?partId={66142AAF-D93D-4FC3-ADA2-92107D13CBB6}&comp=3154&r=1&from=detail&vid=168741) PDF Datasheet (/pdf/viewpdf?partId={66142AAF-D93D-4FC3-ADA2-92107D13CBB6}&comp=3154&r=1&from=detail&vid=

© Copyright 2016 IEEE GlobalSpec - All rights reserved. Use of this website signifies your agreement to the IEEE Terms and Conditions (http://www.ieee.org/site_terms_conditions.html).

Farr Gold Series®

Customer Installation Photos

Case Studies

Who's Using Farr GS

Testimonials

Industry Articles

Total Cost of Ownership

Company Info

About Us

Free Product/Eng'g CD

Product Awards

Dust Testing Capabilities

News & Events

Jobs/Careers

Contact Us

Sales Representatives

Regional Offices

Join our VIP newsletter list!

Follow. Connect. Watch. Learn.

Farr Gold Series®

Model Configurations

Farr Gold Series offers modular design for maximum flexibility - have it your way fast! Each module accommodates airflows up to 5,000 cfm each. Component configurations are virtually unlimited. Standard Farr Gold Series model configurations are GS2, GS4, GS6, GS8, GS10, GS12SQ, GS16, GS16L, GS18, GS20, GS24, GS32, GS36, GS40, GS48, GS48L, GS56, GS60, GS72, GS84, GS96, GS108 & GS120, but any size configuration can be obtained.

MODEL # CODE

GS 24

# of Cartridges

Gold Series

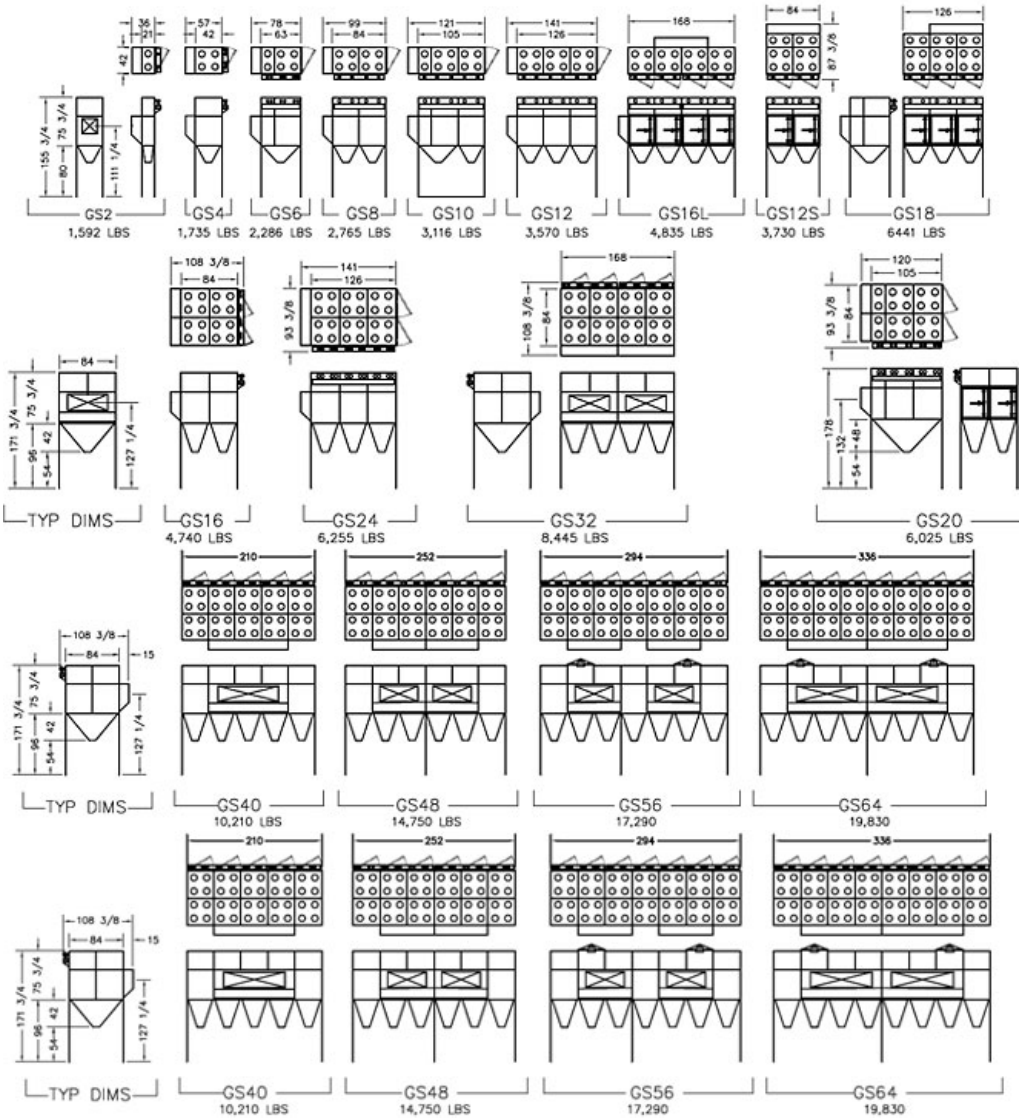

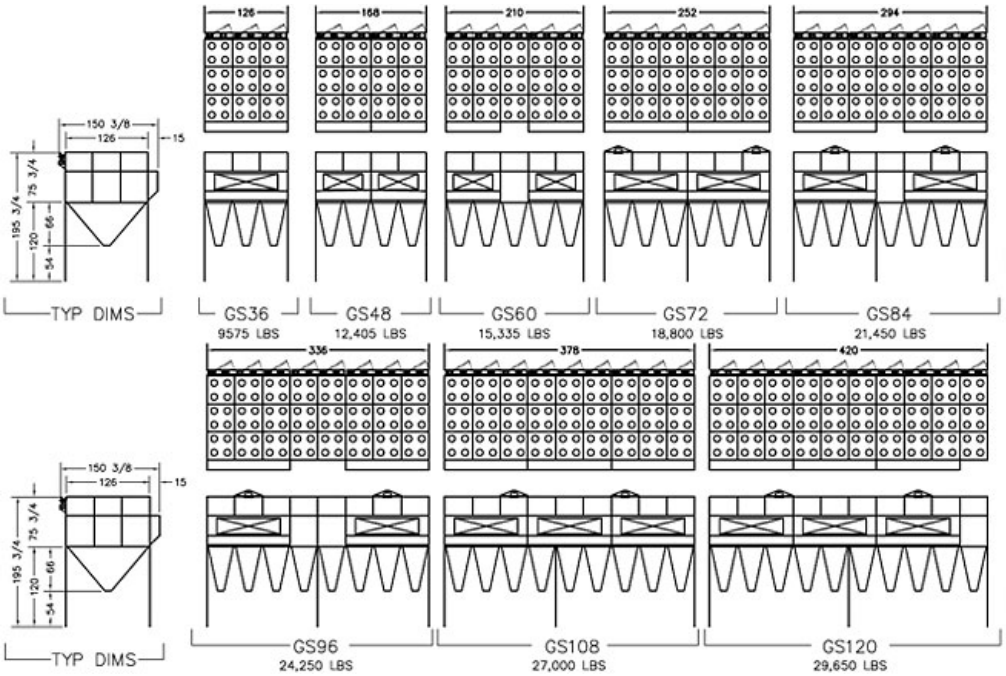

Largest single point discharge hoppers available. Trough hoppers also available. Hoppers shown result in lowest possible head height. For a larger view of the above diagram please download the product bulletin.

Next: Gold Cone® Filters

© Copyright 2014 Camfil APC

Cyclone Model 3624 floor standing blasting cabinets provides a solid steel cabinet frame and sufficient room for a variety of parts. A top opening blaster, for the majority of users, means parts will be lifted up and placed into the cabinet.

Cyclone Manufacturing is proud to offer a complete line of abrasive sandblast cabinets proudly manufactured by our expert staff here in the USA. Our floor standing sandblast cabinets are available as top opening, full-top opening, side opening, full-pass through, and in multiple-user configurations.

If you can't find what you are looking for, please contact us and we will be happy to help you.

Model 3624

Top Opening Sandblast Cabinet

Front View - Closed

Click for Product Manual (/pdfs/manuals/3624.pdf)

Highlights:

- Full Top Opening top means larger capacity
- Made in USA
- Constructed of 16 gauge welded steel
- Trigger Operated Blast System

Detailed Specifications

Overall Dimensions	Overall Dimensions: 58" (h) x 36" (w) x 25" (d)
Working Dimensions	Working Dimensions: 24" (h) x 35" (w) x 24" (d)
Side Door	Side Door: 13" x 9"
Window	Window: 20" x 9" acrylic
Construction	Construction: 16

	gauge steel
Blast System	14 CFM @ 90-100 PSI
Blaster Operation	Trigger Operated
Dust Collector	Dust Collector: DC1500
Electrical	Electrical: 110 Volts
Weight	Weight: 200 lbs. (common carrier)

More About this Model

The *Cyclone Manufacturing* Model 3624 offers its user a spacious work area. The 3624 full top opening lid requires minimal effort to open, and once open, the lid is fully supported from the rear. These two factors help reduce user fatique.

Additional features of this unit are the oversize access ports. These ports provide the user with flexible access to the trigger operated blast system. The rubber gloves protect the user's hands and are long enough and flexible so that the entire work area inside the machine is accessible to the user without lifting the lid.

Parts List (click/push)

© Copyright 2016|Cyclone Manufacturing - 269-782-9670

A RUGGED AND FLEXIBLE HIGH-SPEED, COMMERCIAL-GRADE ROUTER

5000 SERIES CNC ROUTER

A flexible heavy-duty routing machine for a broad range of large-scale applications.

5000 SERIES CNC ROUTER

The 5000 series is our mid-size CNC router. With a 1,800 IPM cut speed, you get a fast and efficient cut. A 3,000 IPM rapid traverse means this router moves quickly enough to keep your productivity high. And, with a consistently repeatability of just 1/1000th of an inch, your cutting accuracy always stays high too.

Compared to the 7000 series, the 5000 series comes with fewer customizable options. It also has a more compact working area that fits well in smaller workplaces. It has the same amount of power as the 5000 series, but is more powerful than both the 3000 and 1000 series. It also has a faster rapid traverse and cutting speed.

Since it's made completely of steel, the 5000 series remains durable through the toughest of workplace conditions. You're best off using it for woodworking, non-ferrous metals, plastics, and sign making. A robust 12 MB of memory means you can easily store and transfer programs, which helps keep your productivity high.

The smaller working area with still high cutting and rapid traverse speeds and precise repeatability make the 5000 series a great fit for small production facilities. Call Multicam today at **972.929.4070** to learn more about the 5000 series and discuss customizable options.

STANDARD FEATURES

- MultiCam EZ Control® and EZ G-Code™ software
- Heavy, all-steel gusseted plate frame construction
- High-speed three-axis motion-control system
- 12 MB memory with unlimited file size transfers
- Brushless digital AC servo drives

OPTIONS

- Automatic 12-position rotary tool changer and auto tool calibration
- MultiCam CNC Knife with optional cutting heads Z-axis clearance options: 12” or 16”

SPECIFICATIONS

- 25mm and 35mm linear ball-bearing profile rails
- Z-axis clearance: 8”
- Cut speed: 1,800 IPM
- Rapid traverse: 3,000 IPM
- Repeatability: +/- 0.001”
- Drive system X and Y-axis: helical rack and pinion
- Drive system Z-axis: ball screw
- MultiVision™ Digital Registration System

MATERIAL CUT

- Wood
- Plastics
- Non-ferrous metals
- Composite materials

APPLICATIONS

- Woodworking
- Non-ferrous metal production
- 3-D signs and graphic applications

BASIC INFORMATION

- 5.5 – 20 HP
- Working area: 50” x 50” to 120” x 242”
- Rapid traverse: 3,000 IPM
- Repeatability: +/- 0.001”
- Standard Work surface: 1” phenolic

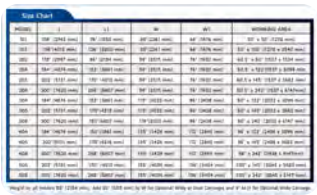

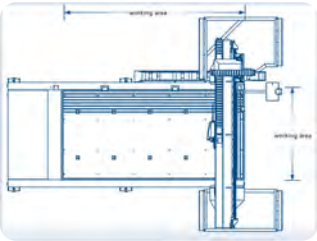

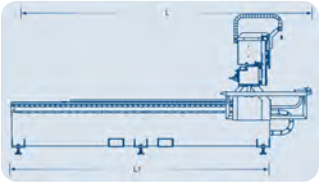

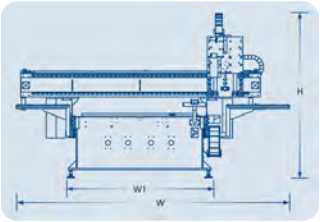

MultiCam Inc 1025 West Royal Lane
DFW Airport, Texas 75261 USA

tel +1.972.929.4070
fax +1.972.929.4071

PO Box 612048
Dallas, Texas 75261

2016 © MultiCam Inc. Website Design, Website Development & Website Hosting by i5 web works.

Built for a Lifetime

Mach One GT Series

The Mach One GT Series of CNC routers from Komo Machine have been developed specifically for the cost-conscious yet demanding customer who expects the utmost in technical quality and reliability. These machines feature a moving gantry configuration with table sizes available up to 24' (7316mm) in the X axis.

Features

- Four-pole, 13.4HP (10kw), 24,000 RPM, HSK 63F, fan-cooled spindle
- 12 position automatic tool changer with aggregate capability
- Air blast for optimal dust/chip evacuation and cooling of the cutting tool
- Dual helical rack drive on X/U axes with synchronous axis control
- Tool touch-off device with automatic tool data uploading
- Fanuc Panel i control with HVI servo system and integrated PC
- Universal grid fixture table available in composite (standard) or aluminum (option)
- Pressurized automatic centralized lubrication system
- Komo Production Manager with Intelligent Spoil Board Management
- 17" touch screen display

Construction

- FEA "Finite Element Analysis" engineered structure
- Heavy-duty steel fabrication
- Closed-loop counterbalance system minimizes plant air consumption

KOMO

One Komo Drive
Lakewood, NJ 08701
www.komo.com

Toll Free: 800-255-5670
Phone: 732-719-6222
Fax: 732-579-5443

Mach One GT Series - Technical Data

Spindle

Quantity	One (1)
Type	13.4HP (10kw), four-pole, fan cooled
RPM	Up to 24,000, fully programmable
Taper	HSK 63F

Tables

510	60" x 120" (1524mm x 3048mm)
512	60" x 144" (1524mm x 3658mm)
524	60" x 288" (1524mm 7316mm)
	Four (4) 1" (25mm) part location pins

Aggregate-Capable Tool Changer

Max Quantity	12 tools
Max Diameter	3.25" (82mm) positions full; 6.5" (165mm) adjacent positions empty
Max Weight	12 lbs each / 80 lbs total (5.4kg / 36.4kg)
Max Length	5" (127mm)

Feed Rate/Traverse

X Axis	2100ipm (53.5mpm)
Y Axis	2300ipm (58.5mpm)
Z Axis	1200ipm (30.5mpm)
Acc/Dec	83.3 in/sec^2

Axis Travels

510	131" (3327mm) x 86" (2184mm) x 10" (254mm)
512	155" (3937mm) x 86" (2184mm) x 10" (254mm)
524	299" (7595mm) x 86" (2184mm) x 10" (254mm)

Positioning

Accuracy	±0.0008" (0.02mm) unidirectional linear axis positioning, per meter

Control System

Fanuc Panel i	With integrated PC and 17" touch screen display

Dust Collection

Interface	6" (152mm) diameter (recommended volume 900 cfm)

Vacuum System

With low vacuum sensing interface

Options

Tooling Package	Tool holders, collets, bench top tool changing block, wrench
Vacuum Pumps	Started via pushbutton on main operator panel, with remote start relay
Boring Blocks	Available in a variety of configurations, from nine to 25 spindles
Part Labeling	Print labels directly onto parts as they are machined
Safety Equipment	Laser scanners, light curtains, pressure mats
Material Handling	Automated to remove parts, clean the spoil board and load material in one pass
Dual Screen	Additional 17" screen attached to the control allows for flexibility
Mist Coolant	For cutting non-ferrous metals
C Axis	Allows use of aggregate tooling, for five axis machining capability

Copyright Komo Machine, Inc. The information presented in this publication was correct at press time.
Komo Machine reserves the right to alter or change specifications without prior notice.
Some photos may show protective guarding removed for clarity. Never operate any machine without guarding in place and in operation.

Donaldson®
Torit®

CYCLONE DUST COLLECTORS

MODELS 12, 16, 20, 24, 30, 36, and 44

Mechanical separator using centrifugal force to remove large and high-volume dust from industrial applications.

- An economical solution to a wide range of dust collection problems
- Excellent for high dust load, high temperature, and product recovery applications
- Can be used alone, with optional bag filter assembly, or as a pre-cleaner
- Applications from 300 - 13,000 cfm (510 - 22,082 m^3/h)
- Heavy-duty construction for long life and low maintenance
- Meets most seismic and 90 mph (145 kmph), Exp C wind load ratings
- Removable cone section for easy replacement

Cyclone Dust Collector
with Optional Bag Filter Assembly

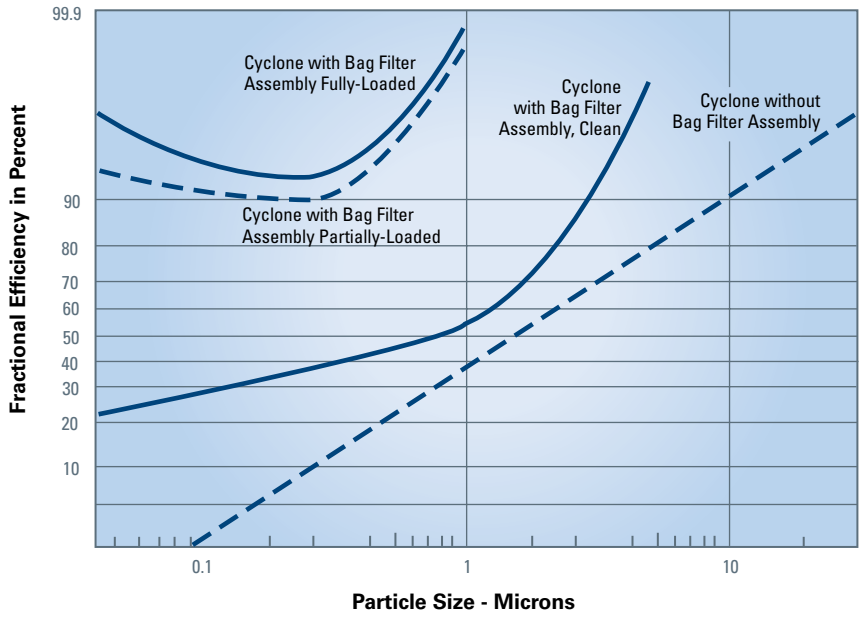

Fractional Efficiency is the ratio of particles collected to particles entering the cyclone.

This chart illustrates the efficiency* of a Cyclone collector with and without an optional filter bag assembly under clean, partially-loaded, and fully-loaded filter bag conditions.

* Actual efficiency may vary depending on the application. Dust concentration, airflow, particle shape, and density affect filtration efficiency.

OPERATIONAL EXPLANATION

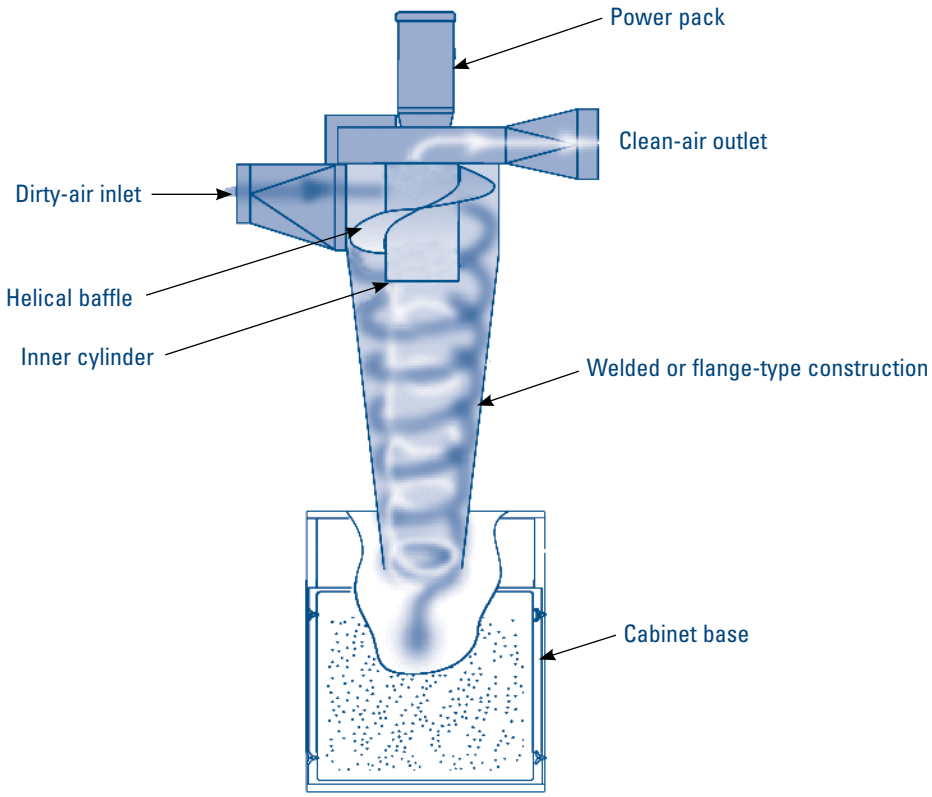

Dust-laden air enters the unit through the air inlet and is diverted by a helical baffle. Centrifugal force moves the heavy dust particles to the interior sidewalls and carries them to the base of the unit. Cleaned air is carried through the inner cylinder and discharges to atmosphere or optional afterfilters.

MULTIPLE RATING TABLE

Model	Nominal Airflow Range*		External Static Pressure ("wg)	Inlet Velocity	
	cfm	m^3/h		fpm	m/min
12	300 - 540	510 - 917	5.6 - 4.1	3580 - 6200	1091.2 - 1889.8
16	860 - 1,200	1,461 - 2,038	7.9 - 4.6	4380 - 6135	1335.0 - 1869.9
20-3	1,250 - 2,000	2,123 - 3,397	7.5 - 3.7	3555 - 5710	1083.6 - 1740.4
20-5	1,500 - 2,500	2,548 - 4,247	11.4 - 5.0	4290 - 7140	1307.6 - 2176.3
24	1,950 - 3,500	3,312 - 5,945	13.4 - 4.4	3580 - 6450	1091.2 - 1966.0
30-10	3,000 - 4,500	5,096 - 7,644	9.9 - 5.0	3820 - 5730	1164.3 -1746.5
30-15	4,000 - 5,600	6,795 - 9,512	11.0 - 4.9	5100 - 7140	1554.5 - 2176.3
36-20	4,300 - 7,000	7,304 - 11,891	11.4 - 4.9	4015 - 6540	1223.8 - 1993.4
36-25	4,500 - 7,500	7,644 - 12,740	14.9 - 6.3	4210 - 7010	1283.2 - 2136.6
36-30	5,000 - 8,000	8,493 - 13,589	16.1 - 7.1	4670 - 7465	1423.4 - 2275.3
44-40	8,000 - 11,500	13,589 - 19,534	15.1 - 5.5	4530 - 6510	1380.7 - 1984.2
44-50	8,000 - 13,000	13,589 - 22,082	18.8 - 7.0	4530 - 7360	1380.7 - 2243.3

* Based on clean bag filters.

DIMENSIONS & SPECIFICATIONS

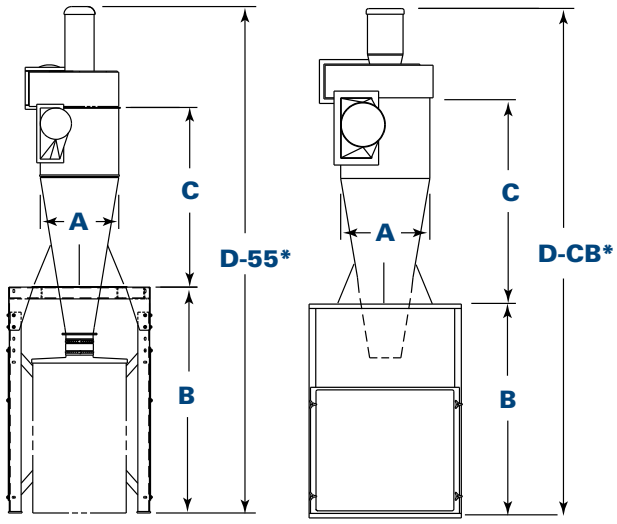

55-Gallon Drum Base

Cabinet Base

Model	Dimensions									
	A		B		C		D-55*		D-CB*	
	in	mm	in	mm	in	mm	in	mm	in	mm
12	12	304.8	55	1397.0	32	812.8	100	2540.0	78	1981.2
16	16	406.4	55	1397.0	36	914.4	108	2743.2	86	2184.4
20-3	20	508.0	55	1397.0	48	1219.2	121	3073.4	114	2895.6
20-5	20	508.0	55	1397.0	48	1219.2	123	3124.2	116	2946.4
24	24	609.6	67	1701.8	55	1397.0	145	3683.0	126	3200.4
30-10	30	762.0	67	1701.8	72	1828.8	162	4114.8	154	3911.6
30-15	30	762.0	67	1701.8	72	1828.8	162	4114.8	154	3911.6
36-20	36	914.4	67	1701.8	85	2159.0	183	4648.2	—	—
36-25	36	914.4	67	1701.8	85	2159.0	186	4724.4	—	—
36-30	36	914.4	67	1701.8	85	2159.0	186	4724.4	—	—
44-40	44	1117.6	—	—	104	2641.6	—	—	—	—
44-50	44	1117.6	—	—	104	2641.6	—	—	—	—

* Typical. May vary based on motor type/size ordered.

Model	Optional Bag Filter Assembly			Motor (hp)	Air Inlet		Air Outlet		Dust Capacity				Shipping Weight			
	Filter Area		No. of Bag Filters						Dust Drawer		Hopper		Standard		With Optional Bag Filter Assembly	
	ft^2	m^2			in	mm	in	mm	ft^2	m^2	ft^2	m^2	lb	kg	lb	kg
12	15	1.4	1	¾	4	101.6	6	152.4	4.8	0.4	12.0	1.1	325	147.4	350	158.8
16	25	2.3	1	2	6	152.4	8	203.2	4.8	0.4	12.0	1.1	390	176.9	410	186.0
20-3	70	6.5	4	3	8	203.2	10	254.0	8.5	0.8	19.5†	1.8	600	272.2	740	335.7
20-5	70	6.5	4	5	8	203.2	10	254.0	8.5	0.8	19.5†	1.8	640	290.3	740	335.7
24	100	9.3	4	7.5	10	254.0	12	304.8	8.5	0.8	37.5†	3.5	750	340.2	850	385.6
30-10	200	18.6	8	10	12	304.8	14	355.6	16.5	1.5	37.5†	3.5	1175	533.0	1400	635.0
30-15	200	18.6	8	15	12	304.8	14	355.6	16.5	1.5	37.5†	3.5	1210	548.8	1486	674.0
36-20	300	27.9	12	20**	14	355.6	16	406.4	—	—	54.0†	5.0	2000	907.2	2300	1043.3
36-25	300	27.9	12	25	14	355.6	16	406.4	—	—	54.0†	5.0	2145	973.0	2445	1109.0
36-30	300	27.9	12	30**	14	355.6	16	406.4	—	—	54.0†	5.0	2165	982.0	2465	1118.1
44-40	600	55.7	24	40**	18	457.2	20	508.0	—	—	103.0	9.6	3150	1428.8	3550	1610.3
44-50	600	55.7	24	50**	18	457.2	20	508.0	—	—	103.0	9.6	3165	1435.6	3565	1617.1

* Based on clean filters.
** Model 36-20 and 36-30 available with direct- or belt-drive blowers. Model 44 available with belt-drive blower only.
† Up to 103 ft^3 (2.92 m^3) hopper available.

BASE OPTIONS

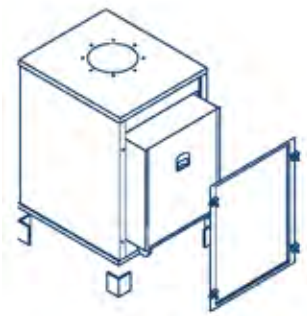

Cabinet Base

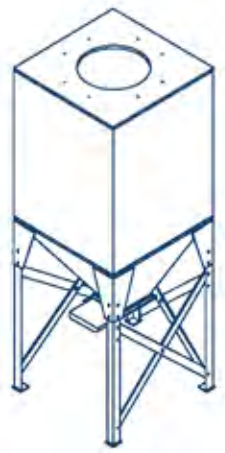

Hopper Base

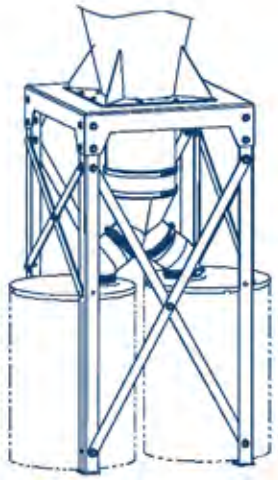

Two-Drum Style
55-Gallon Drum Base
(optional)

Surge Hopper
(optional)

STANDARD FEATURES & AVAILABLE OPTIONS

STANDARD	OPTIONAL
Inlet assembly	Power pack
55-gallon (208.2-liter) drum base for Models 12 though 36	Explosion-proof motors
TEFC motor with 60 Hz 1 HP and larger are EISA compliant	50 Hz, single phase motors
103 cu. ft. hopper and legs for Model 44	Steel or aluminum fan wheels
208/230/460/60/3 voltages	Hopper base
10-year warranty	Two 55-gallon (208.2-liter) drum base for Models 20, 24, and 30
	Cabinet base for Models 12, 16, 20, 24, and 30
	Surge hopper
	Silencer
	Exhaust accessories
	Attenuator
	Bag filter options
	Bag filter enclosure
	Explosion vent

Significantly improve the performance of your collector with genuine Donaldson Torit replacement filters and parts. **Call Donaldson Torit today 800-365-1331.**

Donaldson.
FILTRATION SOLUTIONS

Tel 800-365-1331 (USA)
Tel 800-343-3639 (within Mexico)

donaldsontorit@donaldson.com
donaldsontorit.com

Donaldson Company, Inc.
Torit
P.O. Box 1299
Minneapolis, MN
55440-1299 U.S.A.

EXACTLY WHAT YOU NEED.™

Data Sheet Cyclone Dust Collectors (09/12)
© 1995 Donaldson Co., Inc. All Rights Reserved. All products, product specifications, and data (airflow, capacity, dimensions, or availability) are subject to change without notice, and may vary by region or country. Donaldson Torit is a registered trademark of Donaldson Company, Inc. Contains Donaldson proprietary technology.

EFFICIENCIES OF TORIT® DUST COLLECTORS IN REMOVAL OF AIRBORNE CONTAMINANTS

TORIT FABRIC FILTER TYPE DUST COLLECTORS–

Fabric filter type dust collectors are being widely used for removing all kinds of airborne contaminating particles.

The particulate removal efficiency of fabric filters has ordinarily been determined on a simple weight basis. The weight efficiency test, using a dust containing a broad range of particle sizes, cannot provide needed accuracy; larger particles, accounting for most of the weight, are easily filtered out, thus indicating a high efficiency on a weight basis. For example, if two particles, one a ten micron particle and the other a one micron particle, are fed to a filter which stops the 10 micron (1 micron = 1/25,400 inch) particle but allows the 1 micron particle to pass through, the filter is rated 99.9+% efficient by weight. If rated on basis of number of particles rather than weight, it would be only 50% efficient; that is, it only stopped one out of the two particles.

A truer measure of efficiency is obtained by testing the filter with a flow of airborne particles of uniform size. The *fractional efficiency curve* obtained by measuring the efficiency on a series of homogeneous airborne particles is much superior to the weight efficiency as an indicator of true filter efficiency. The special homogeneous particulate generation equipment and measurement techniques used in testing Torit equipment were developed under the direction of Dr. Kenneth T. Whitby, world-recognized authority on airborne contamination, under auspices of the United States Public Health Service. The fractional efficiency curves for Torit equipment were determined in tests performed under supervision of Dr. Whitby at the University of Minnesota Mechanical Engineering Dept. (For greater detail write us for copy of "Fractional Efficiency Characteristics" technical report.)

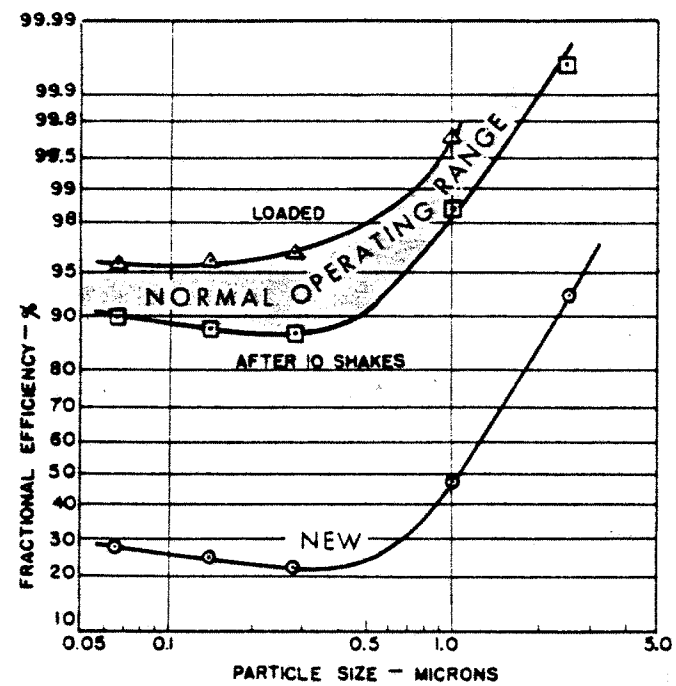

The fractional efficiency curve indicates Torit Fabric Filter type Dust Collectors are 98.4—99.75% efficient in removing uniform flows of 1.0 micron particulate and virtually 100% efficient at 2.0 microns. These Fabric Filters are recognized as the most efficient practical means known to man for removing fine particulate from industrial air or gas streams. The "new" curve is experienced only momentarily with brand-new filters. As soon as the permanent dust mat builds up on the filters, efficiencies reach the "normal operating range."

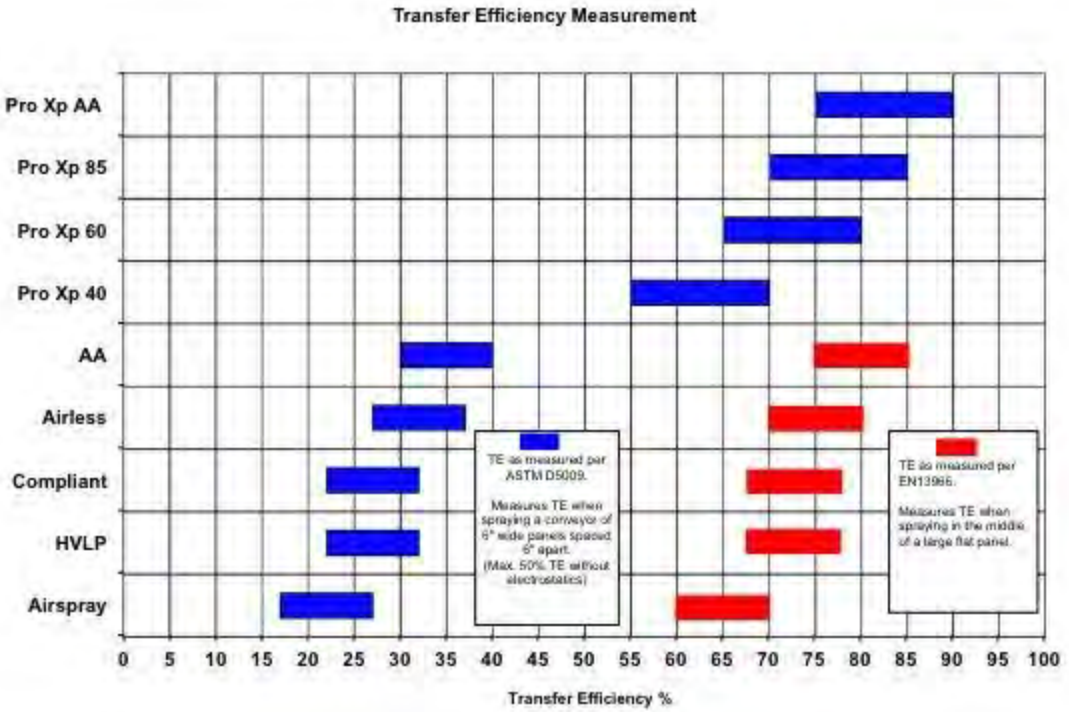
Transfer Efficiency Measurement
Pro Xp AA
Pro Xp 85
Pro Xp 60
Pro Xp 40
AA
Airless
Compliant
HVLP
Airspray
TE as measured per ASTM D5009.
Measures TE when spraying a conveyor of 6" wide panels spaced 6" apart.
(Max. 50% TE without electrostatics)
TE as measured per EN13966.
Measures TE when spraying in the middle of a large flat panel.
0 5 10 15 20 25 30 35 40 45 50 55 60 65 70 75 80 85 90 95 100
Transfer Efficiency %

G40 Gun with RAC Tip

Air-Assisted Airless Spray Gun

For faster, professional fine finish spraying with light viscosity, water and solvent based materials

Graco's G40 gun is the premier Air-Assisted Airless gun in the industry and comes standard with all FinishPro II sprayers. From its ultra-light trigger pull to the ergonomic fit, it truly is a gun by which all other guns are measured.

Features | Resources | Specifications | Materials | Related Products

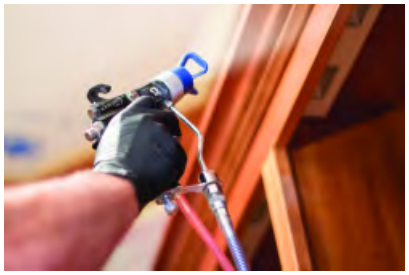

- An industrial-grade finishing gun, built for years of uninterrupted service
- Light-weight, compact design is ideal for getting into tight areas
- Ultra-light trigger pull and form-fitted handle means less user fatigue
- Air adjustment valve conveniently located right at the gun
- Gun filter integrated into the gun to minimize tip clogs and provide a superior finish

Manuals

311937G - G40 Air Assisted Spray Gun, Instructions, Parts, English (/content/dam/graco/tech_documents/manuals G.pdf)
[other languages] (#otherlanguagesmwbox0)

Literature

Fine Finish Sprayers Brochure (/content/dam/graco/ced/literature/brochures/300564/300564EN-N.pdf)
[other languages] (#otherlanguagesmwbox1)

View values in metric units.

G40 Air Assisted Spray Gun

	U.S.
Maximum Working Fluid Pressure	4000 psi
Maximum Working Air Pressure	100 psi
Maximum Working Fluid Temperature	110° F
Fluid inlet	1/4-18 npsm
Air Inlet	1/4-18 npsm
Gun weight	16 oz
Sound Pressure*: 20 psi (140 kPa, 1.4 bar)	66.9 dB(A
Sound Pressure*: 100 psi (0.7 kPa, 7 bar)	80.0 dB(A)
Sound Power*: 20 psi (140 kPa, 1.4 bar)	76.8 dB(A)
Sound Power*: 100 psi (0.7 kPa, 7 bar)	89.9 dB(A)
Wetted Parts:	Stainless Steel, Carbide, Ultra High Molecular Weight Polyethylene, Acetal, PTFE, Nylon, Flouroelastomer

***All readings were taken with fan valve fully closed, (full fan size) at 20 psi (140 kPa, 1.4 bar) and 100 psi (0.7 kPa, 7 bar) and at the assumed**

Pro Xp™

Electrostatic Spray Guns That Deliver Expert Performance

PROVEN QUALITY. LEADING TECHNOLOGY.

Experienced Painters Rely on

Expert Performance

Pro Xp

We took our trademark, high performing Electrostatic Spray Guns and made them better. They are smaller, lighter and designed to maximize your profits.

And with more models to choose from, you'll get the same performance you've come to expect from Graco – now with greater spraying flexibility for your ever changing production needs.

Stand Out Above the Rest

With state-of-the-art technology and consistently better finishes

With excellent finish quality, aircaps and spray tips that are designed to deliver an even higher quality finish, the Pro Xp is a real stand out! Plus, every gun is tested and delivered with a certificate indicating the spray pattern, mechanical performance and electrical performance meet Graco's requirements and your expectations.

Smart Controls

Analyze Spray Performance
Bar graph shows kV and current, while alternator speed indicator displays electrostatic performance.

Adapt to Your Voltage Needs
Adjust quickly between low or high kV. Change the low setting in 5 kV increments with the push of a button.

Eliminate Guesswork
Diagnostic mode assists troubleshooting with a digital display of actual voltage, current and hertz.

Quick Smart Display Changeout
Remove cartridge quickly and easily when ready to replace.

Built-in Dependability

Stay Running Longer
Durable components give you extra peace of mind knowing that you'll spend less time fixing and more time spraying.

Lower Cost of Ownership
3-Year Warranty, ease of repair and durable components reduce ownership cost.

Made in the USA

3-Year Warranty

Increase Productivity

Reduce Muscle Strain
Smaller and lighter gun body is well-balanced making it easier to spray at a steady rate all day.

Reduce Operator Fatigue
No more heavy power cords to slow you down. The power supply is built into the gun for added efficiency.

Increase Operator Comfort
Ergonomic handle is designed to fit comfortably in sprayer's hand.

Maximize Your Profits

Spray More with Less
40 kV Booster gun gives you the transfer efficiency of a 60 kV gun, in a smaller, more compact size.

Save Money
Higher transfer efficiency equals less waste – saving you money on material.

Save on Energy Costs
New aircaps use less air and help lower your energy bill.

WB100™

Air Spray Waterborne Isolation System

Paired with a **Pro Xp WB** Spray Gun, this portable cabinet isolates waterborne coatings.

Triton®

Air-Operated Diaphragm Spray Packages

Air Spray Packages combine a **Pro Xp Air Spray** gun with our **Triton** air-operated diaphragm pump to deliver high quality finishes.

Smart Controls

Available in 60 kV & 85 kV Models

Alternator Speed Indicator

Indicator changes color with electrostatic performance

Control Knobs

Convenient, easy to access and large knobs allow for easier gun adjustment

Atomizing Air Control

Adjust air from full to minimal to fit your spraying needs

Optional low profile version available

Ergonomic Handle

Smooth, curved handle fits nicely in your hand for comfortable spraying

Light Trigger Pull

Reduces muscle strain and operator fatigue

Air Inlet Swivel

Increases maneuverability

Pro Xp Air Spray

Smaller, Lighter & Superior Quality Spray

Internal Power Supply

Reduce operator fatigue with no heavy cords to slow you down

High Wear Components

Unique design for abrasive materials. Nozzle and electrode allow for longer life with abrasive and metallic coatings.

Standard on High Conductivity guns

Get consistent, high quality finishes every time you spray! All models are up to 1 in (2.5 cm) shorter and 4 oz (110 g) lighter – the smallest profile gun with an internal power supply on the market!

Available in 40, 60 & 85 kV

when you need a little more power

kV Booster Gun

Get the transfer efficiency of a 60 kV gun, in a smaller, more compact size of a 40 kV gun.

when you need a bell-shaped pattern

Round Spray

For parts that require a slow velocity, bell-shaped spray pattern. Available in 60 kV model, but kit fits all air spray guns.

when you have a low resistivity material

High Conductivity Gun

Longer fluid tube allows for spraying lower resistivity material. Available in 40, 60 & 85 kV.

Pro Xp Air-Assist

Smaller, Lighter & Superior Quality Spray

Get a more consistent, high quality finish every time you spray! Plus, the 60 kV gun is the smallest and lightest air-assist gun on the market.

Available in 60 & 85 kV

AEM & AEF Tip Lines

AEM Tip - Delivers a high quality finish for a variety of applications

AEF Tip - Designed with a pre-orifice which helps atomize paints for fine finish applications

More Efficient Aircap

Increase transfer efficiency up to 10%

Improve spray performance and cleanliness

One-piece aircap is indexed for accurate positioning

Fluid Filter

Integrated filter reduces clogging by keeping debris out of the tip

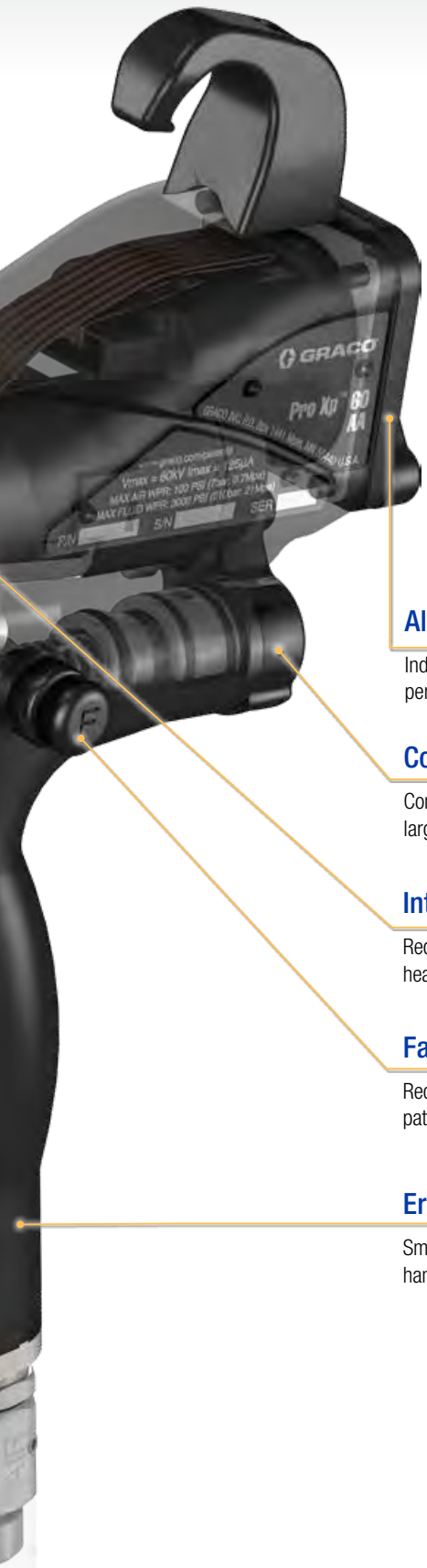

Smart Controls

Available in 60 kV & 85 kV Models

Alternator Speed Indicator

Indicator changes color with electrostatic performance

Control Knobs

Convenient, easy to access and large knobs allow for easier gun adjustment

Internal Power Supply

Reduce operator fatigue with no heavy cords to slow you down

Fan Adjust Pattern Control

Reduce overspray by changing the fan pattern width according to the size of parts

Ergonomic Handle

Smooth, curved handle fits nicely in your hand for comfortable spraying

Merkur®

Air-Assist Fine Finish Spray Packages

This complete finishing system improves productivity, reduces costs and provides consistent, high quality finishes when paired with a **Pro Xp Air-Assist** gun.

WB3000™

Air-Assist Waterborne Isolation System

Paired with the **Pro Xp WB Air-Assist** gun, this portable isolation cabinet with Merkur ES 30:1 is designed to spray waterborne materials at high pressures.

Return on Investment

Calculate Your Savings

ROI Calculator

Use these ROI calculators to see how much you can save when you replace conventional air-assist and HVLP guns with Pro Xp Electrostatic Guns.

The Transfer Efficiency chart below shows how your savings increase as you move up the Pro Xp product line.

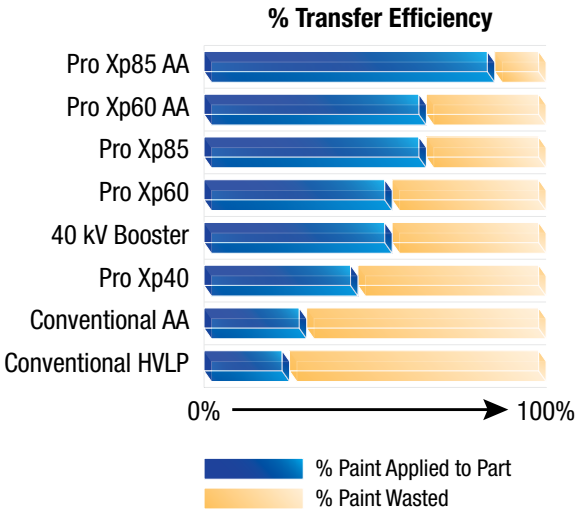

	Example Facility	Your Facility
Paint price per gallon	$50.00	
Gallons sprayed per day	x 5	x
Business days per month	x 20	x
	(Multiply to get total)	(Multiply to get total)
One Month Material Cost	$5,000.00	

Pro Xp Air Spray Material Savings

Compared to Conventional HVLP

Pro Xp85	50%	
Pro Xp40 kV Booster	40%	
Pro Xp60	40%	
Pro Xp40	30%	
One Month Material Savings	**$2,500.00**	

	Example Facility	Your Facility
Paint price per gallon	$50.00	
Gallons sprayed per day	x 5	x
Business days per month	x 20	x
	(Multiply to get total)	(Multiply to get total)
One Month Material Cost	$5,000.00	

Pro Xp Air-Assist Material Savings

Compared to Conventional Air-Assist

Pro Xp85	55%	
Pro Xp60	45%	

Compared to Conventional HVLP

Pro Xp85	60%	
Pro Xp60	50%	
One Month Material Savings	**$2,750.00**	

Ordering Information

Pro Xp Air Spray

Air Spray Gun Models

Part Number	Power Supply kV	Recommended Coating Type	Display Type	Nozzle Size
L85T10	85	Standard	Standard	1.5 mm (0.055 in)
L85M10	85	Standard	Smart	1.5 mm (0.055 in)
L85T16	85	High Conductivity	Standard	1.5 mm (0.055 in)
L85M16	85	High Conductivity	Smart	1.5 mm (0.055 in)
L60T10	60	Standard	Standard	1.5 mm (0.055 in)
L60T12	60	Standard	Standard	1.2 mm (0.047 in)
L60M10	60	Standard	Smart	1.5 mm (0.055 in)
L60M12	60	Standard	Smart	1.2 mm (0.047 in)
L60T16	60	High Conductivity	Standard	1.5 mm (0.055 in)
L60M16	60	High Conductivity	Smart	1.5 mm (0.055 in)
L60T17	60	Waterborne	Standard	1.5 mm (0.055 in)
L60M17	60	Waterborne	Smart	1.5 mm (0.055 in)
L60T11	60	Standard	Standard	Round Spray
L40T10	40	Standard	Standard	1.5 mm (0.055 in)
L40T16	40	High Conductivity	Standard	1.5 mm (0.055 in)

All gun models include aircap part number 24N477.
High Conductivity gun models include a High Conductivity Fluid Tube, High Wear Nozzle and High Wear Electrode.

Air Spray with kV Booster Gun Models

Part Number	Power Supply kV	Recommended Coating Type	Display Type	Nozzle Size
L40T14	40	Standard	Standard	1.5 mm (0.055 in)
L40T15	40	High Conductivity	Standard	1.5 mm (0.055 in)

Aircap Selection Chart

Part Number (color)	Pattern Shape	Length in (cm)	Recommended Fluid Viscosity cp at 70ºF (21ºC)	Recommended Production Rates
24N477 (black)	Round end	15-17 (381-432)	Light to medium (20–70 cp)	Up to 15 oz/min (450 cc/min)
24N438 (black)	Round end	15-17 (381-432)	Light to medium (20–70 cp)	Up to 15 oz/min (450 cc/min)
24N279 (black)	Round end	14-16 (356-406)	Medium to heavy (70–260 cp), and high solids (360+cp)	Up to 15 oz/min (450 cc/min)
24N376 (black), 24N276 (blue) 24N277 (red), 24N278 (green)	Tapered end	17-19 (432- 483)	Light to medium (20–70 cp)	Up to 15 oz/min (450 cc/min)
24N274 (black)	Tapered end	12-14 (305-356)	Light to medium (20–70 cp)	Up to 15 oz/min (450 cc/min)
24N275 (black)	Tapered end	14-16 (356-406)	Light to medium (20–70 cp), and high solids (360+cp), aerospace coatings	Up to 25 oz/min (750 cc/min)
24N439 (black)	Tapered end	11–13 (279–330)	For use with 2.0 mm nozzles. Medium to heavy (70–260 cp), and high solids (360+cp)	Up to 20 oz/min (600 cc/min)
24N453 (black)	Round end	14-16 (356-406)	Light to medium (20-70 cp)	Up to 15 oz/min (450 cc/min)

- Distance to target: 10 in (254 mm)
- Inlet air pressure: 50 psi (3.4 bar, 34 kPa)
- Fan air: adjusted for maximum width
- Fluid flow rate: 10 oz/min (300 cc/min)

Nozzle Selection Chart

Fluid Nozzle for Standard Materials

Part Number	Color	Orifice Size - mm (inch)
24N619	Black	0.55 (0.022)
24N613	Black	0.75 (0.029)
24N614	Black	1.0 (0.042)
24N615	Black	1.2 (0.047)
24N616	Black	1.5 (0.055)
24N617	Black	1.8 (0.070)
24N618	Black	2.0 (0.080)

High Wear Fluid Nozzle for Abrasive Materials

Part Number	Color	Orifice Size - mm (inch)
24N620	Blue	0.75 (0.029)
24N621	Blue	1.0 (0.042)
24N622	Blue	1.2 (0.047)
24N623	Blue	1.5 (0.055)
24N624	Blue	1.8 (0.070)
24N625	Blue	2.0 (0.080)

Ordering Information

Pro Xp Air-Assist

Air-Assist Gun Models

Part Number	Power Supply kV	Recommended Coating Type	Display Type
H85T10	85	Standard	Standard
H85M10	85	Standard	Smart
H60T10	60	Standard	Standard
H60M10	60	Standard	Smart
H60T18	60	Waterborne	Standard
H60M18	60	Waterborne	Smart

All gun models include AEM or AEF tip of choice.

AEM Spray Tips

Recommended for high finish quality applications at low and medium pressures.
Order desired tip, Part No. AEMxxx, where xxx = 3-digit number from the matrix below.

Orifice Size inch (mm)	Fluid Output fl oz/min (l/min)		Maximum Pattern Width at 12 inches (305 mm) inches (mm)							
	at 600 psi (41 bar, 4.1 MPa)	at 1000 psi (70 bar, 7.0 MPa)	2-4 (50-100)	4-6 (100-150)	6-8 (150-200)	8-10 (200-250)	10-12 (250-300)	12-14 (300-350)	14-16 (350-400)	16-18 (400-450)
			Spray Tip							
† 0.007 (0.178)	4.0 (0.1)	5.2 (0.15)	107	207	307	–	–	–	–	–
† 0.009 (0.229)	7.0 (0.2)	9.1 (0.27)	–	209	309	409	509	609		–
† 0.011 (0.279)	10.0 (0.3)	13.0 (0.4)	–	211	311	411	511	611	711	–
0.013 (0.330)	13.0 (0.4)	16.9 (0.5)	–	213	313	413	513	613	713	813
0.015 (0.381)	17.0 (0.5)	22.0 (0.7)	–	215	315	415	515	615	715	815
0.017 (0.432)	22.0 (0.7)	28.5 (0.85)	–	217	317	417	517	617	717	–
0.019 (0.483)	28.0 (0.8)	36.3 (1.09)	–	–	319	419	519	619	719	–
0.021 (0.533)	35.0 (1.0)	45.4 (1.36)	–	–	–	421	521	621	721	821
0.023 (0.584)	40.0 (1.2)	51.9 (1.56)	–	–	–	423	523	623	723	823
0.025 (0.635)	50.0 (1.5)	64.8 (1.94)	–	–	–	425	525	625	725	825
0.029 (0.736)	68.0 (1.9)	88.2 (2.65)	–	–	–	–	–	–	–	829
0.031 (0.787)	78.0 (2.2)	101.1 (3.03)	–	–	–	431	–	631	–	831
0.033 (0.838)	88.0 (2.5)	114.1 (3.42)	–	–	–	–	–	–	–	833
0.037 (0.939)	108.0 (3.1)	140.0 (4.20)	–	–	–	–	–	–	737	
0.039 (0.990)	118.0 (3.4)	153.0 (4.59)	–	–	–	–	539	–	–	–

* Tips are tested in water.
Fluid output (Q) at other pressures (P) can be calculated by this formula: $Q = (0.041)(QT)\sqrt{P}$ where QT = fluid output (fl oz/min) at 600 psi from the above table for the selected orifice size.
† These tip sizes include a 150 mesh filter.

AEF Fine Finish Pre-Orifice Spray Tips

Recommended for high finish quality applications at low and medium pressures. AEF tips have a pre-orifice that assists in atomizing sheer thinning materials.
Order desired tip, Part No. AEFxxx, where xxx = 3-digit number from the matrix below.

Orifice Size inch (mm)	Fluid Output fl oz/min (l/min)		Maximum Pattern Width at 12 inches (305 mm) inches (mm)					
	at 600 psi (41 bar, 4.1 MPa)	at 1000 psi (70 bar, 7.0 MPa)	6-8 (150-200)	8-10 (200-250)	10-12 (250-300)	12-14 (300-350)	14-16 (350-400)	16-18 (400-450)
			Spray Tip					
† 0.010 (0.254)	9.5 (0.28)	12.5 (0.37)	310	410	510	610	710	–
0.012 (0.305)	12.0 (0.35)	16.0 (0.47)	312	412	512	612	712	812
0.014 (0.356)	16.0 (0.47)	21.0 (0.62)	314	414	514	614	714	814
0.016 (0.406)	20.0 (0.59)	26.5 (0.78)	–	416	516	616	716	–

* Tips are tested in water.
Fluid output (Q) at other pressures (P) can be calculated by this formula: $Q = (0.041)(QT)\sqrt{P}$ where QT = fluid output (fl oz/min) at 600 psi from the above table for the selected orifice size.
† These tip sizes include a 150 mesh filter.

Technical Specifications

Pro Xp Electrostatic Guns

Tech Specs by Gun Model

		Pro Xp40	Pro Xp60	Pro Xp85	Pro Xp60 AA	Pro Xp85 AA
Maximum Voltage Output		40 kV	60 kV	85 kV	60 kV	85 kV
Maximum Working Fluid Pressure		100 psi (7 bar, 0.7 MPa)	100 psi (7 bar, 0.7 MPa)	100 psi (7 bar, 0.7 MPa)	3000 psi (210 bar, 21 MPa)	3000 psi (210 bar, 21 MPa)
Maximum Working Air Pressure		100 psi (7 bar, 0.7 MPa)	100 psi (7 bar, 0.7 MPa)	100 psi (7 bar, 0.7 MPa)	100 psi (7 bar, 0.7 MPa)	100 psi (7 bar, 0.7 MPa)
Gun Weight (without hose)*		19.8 oz (560 g)	21 oz (600 g)	23.8 oz (675 g)	23 oz (660 g)	25.7 oz (728 g)
Gun Length		8.7 in (22 cm)	9.5 in (24 cm)	10.5 in (26.5 cm)	9.7 in (24.5 cm)	10.7 in (27 cm)
Recommended paint resistivity range	Standard	25 MΩ/cm to ∞	25 MΩ/cm to ∞	25 MΩ/cm to ∞	3 MΩ/cm to ∞	3 MΩ/cm to ∞
	High Cond.	1 to 25 MΩ/cm	1 to 25 MΩ/cm	1 to 25 MΩ/cm	–	–
	Waterborne	–	≤ 1 MΩ/cm	–	≤ 1 MΩ/cm	–
Fluid Inlet		3/8 npsm(m)	3/8 npsm(m)	3/8 npsm(m)	1/4-18 npsm(m)	1/4-18 npsm(m)
Air Inlet		1/4 npsm(m) left handed thread	1/4 npsm(m) left handed thread	1/4 npsm(m) left handed thread	1/4 npsm(m) left handed thread	1/4 npsm(m) left handed thread
Instruction Manual	Standard	3A2494	3A2494	3A2494	3A2495	3A2495
	Waterborne	–	3A2496	–	3A2497	–

*Standard gun model. For other models reference the instruction manual.

Grounded Air Hoses (required for use)

Length	Air Flex™	Air Flex with QD	Standard	Waterborne*
6 ft (1.8 m)	244963	–	223068	235068
15 ft (4.6 m)	244964	–	223069	235069
25 ft (7.6 m)	244965	24N736	223070	235070
36 ft (11 m)	244966	24N737	223071	235071
50 ft (15 m)	244967	24N738	223072	235072
75 ft (23 m)	244968	–	223073	235073
100 ft (30.5 m)	244969	–	223074	235074

Air Flex: EPDM rubber core and cover for extra flexibility.

Air Flex with QD: Hose includes Quick Disconnect coupling, part number 112534

Standard: Modified semi-conductive polyamide core, urethane cover for added durability.

*Waterborne (required for isolated waterborne applications): Conductive SST wire braid for grounding. Polyurethane tube and cover.

Operator Accessories

Part Number	Description
117823	Conductive Gloves, box of 12 (small)
117824	Conductive Gloves, box of 12 (medium)
117825	Conductive Gloves, box of 12 (large)
24N603	Gun Covers. For 40 kV and 60 kV guns. Box of 10.
24N604	Gun Covers. For 85 kV guns. Box of 10.
24N758	Display Covers. Keeps Smart display clean. Package of 5.
24N520	Comfort Grip. Snap-on grip increases handle size to reduce operator fatigue. Medium size.
24N521	Comfort Grip. Snap-on grip increases handle size to reduce operator fatigue. Large size.
24P170	Metal trigger to replace standard trigger.
24P171	Four-finger Trigger Kit. To convert Pro Xp air spray guns to a four-finger trigger.

Test Equipment

Part Number	Description
241079	Megohmmeter. 500 V output, 0.01-2000 megohms. Use for ground continuity and gun resistance tests.
722886 722860	Paint Resistance Meter. Use for fluid resistivity test. Paint Probe. Use for fluid resistivity test. These two parts must be used together.
245277	Test Fixture. High Voltage Probe and kV meter. Use to test the electrostatic voltage of the gun and the condition of the alternator and power supply when being serviced.
24R038	Test fixture adaptor to change from Pro Xs to Pro Xp

Gun Accessories

Part Number	Description
24N642	Ball Swivel for gun air inlet. 1/4 npsm (left-handed thread).
24P172	Quick Adjust Knob. For quick change of fan size.
24N636	Low profile atomizing air control
24N993	High conductivity hose. 25 ft length to replace 60 kV HC fluid tube kit.
24N318	Round Spray Kit. To convert a standard air spray gun to a round spray aircap.
24N319	Round Spray Kit. To convert a standard air-assist spray gun to a round spray aircap.
24N704	Electrode Replacement Needle for abrasive materials. Blue.
112534	Air quick disconnect coupling

Approvals for Pro Xp* Guns

Approved for use in Class I, Division I locations spraying Group D Materials.

Approved for use in Group II, Category 2 locations spraying Group IIA materials.

*Patent pending

ABOUT GRACO

PROVEN QUALITY. LEADING TECHNOLOGY.

Founded in 1926, Graco is a world leader in fluid handling systems and components. Graco products move, measure, control, dispense and apply a wide range of fluids and viscous materials used in vehicle lubrication, commercial and industrial settings.

The company's success is based on its unwavering commitment to technical excellence, world-class manufacturing and unparalleled customer service. Working closely with qualified distributors, Graco offers systems, products and technology that set the quality standard in a wide range of fluid handling solutions. Graco provides equipment for spray finishing, protective coating, paint circulation, lubrication, and dispensing sealants and adhesives, along with power application equipment for the contractor industry. Graco's ongoing investment in fluid management and control will continue to provide innovative solutions to a diverse global market.

GRACO LOCATIONS

MAILING ADDRESS
P.O. Box 1441
Minneapolis, MN
55440-1441
Tel: 612-623-6000
Fax: 612-623-6777

AMERICAS

MINNESOTA
Worldwide Headquarters
Graco Inc.
88-11th Avenue N.E.
Minneapolis, MN 55413

EUROPE

BELGIUM
European Headquarters
Graco N.V.
Industrieterrein-Oude Bunders
Slakweidestraat 31
3630 Maasmechelen,
Belgium
Tel: 32 89 770 700
Fax: 32 89 770 777

ASIA PACIFIC

AUSTRALIA
Graco Australia Pty Ltd.
Suite 17, 2 Enterprise Drive
Bundoora, Victoria 3083
Australia
Tel: 61 3 9468 8500
Fax: 61 3 9468 8599

CHINA
Graco Hong Kong Ltd.
Shanghai Representative Office
Building 7
1029 Zhongshan Road South
Huangpu District
Shanghai 200011
The People's Republic of China
Tel: 86 21 649 50088
Fax: 86 21 649 50077

INDIA
Graco Hong Kong Ltd.
India Liaison Office
Room 443, Augusta Point
Regus Business Centre 53
Golf Course Road
Gurgaon, Haryana
India 122001
Tel: 91 124 435 4208
Fax: 91 124 435 4001

JAPAN
Graco K.K.
1-27-12 Hayabuchi
Tsuzuki-ku
Yokohama City, Japan 2240025
Tel: 81 45 593 7300
Fax: 81 45 593 7301

KOREA
Graco Korea Inc.
Shinhan Bank Building
4th Floor #1599
Gwanyang-Dong, Dongan-Ku,
Anyang-si, Korea 431-060
Tel: 82 31 476 9400
Fax: 82 31 476 9801

SALES/ DISTRIBUTION/ SERVICE

Call today for product information or to request a demonstration.

877-84GRACO (1-877-844-7226) or visit us at www.graco.com.

Graco Inc. is registered to I.S. EN ISO 9001

North America
Customer Service
800-328-0211
Fax 877-340-6427

©2013 Graco Inc. 345007 Rev. B 2/13 All written and visual data contained in this document are based on the latest product information available at the time of publication. Graco reserves the right to make changes at any time without notice. All other brand names or marks are used for identification purposes and are trademarks of their respective owners.

August 12, 2013

US EPA NESHAP 40 CFR, Part 63 Subpart HHHHHH regulations for surface coating applications require that all spray-applied coatings must be applied with a high volume, low pressure (HVLP) spray gun, electrostatic application, airless spray gun, air-assisted airless spray gun, or an equivalent technology that is demonstrated by the spray gun manufacturer to achieve transfer efficiency comparable to one of the spray gun technologies listed above for a comparable operation. The versions of the Graco spray guns listed below comply with US EPA NESHAP 40 CFR, Part 63 Subpart HHHHHH regulations.

Gun Model No.	Description	Spray Technology
288935 thru 41 288952 thru 54 289034 thru 35 289110 289541 288960 thru 61 288967 thru 69 288976 thru 78 288985	Graco AirPro™ Pressure Feed	HVLP
289005 thru 06 289014 thru 15 289023 thru 24	Graco AirPro™ Gravity Feed	HVLP
289030 thru 31 289993 thru 94	Graco AirPro™ Siphon Feed	HVLP
289237 thru 41 289256 thru 60 24J599 thru 603	Graco Finex™ Gravity Feed	HVLP
289247 thru 50	Graco Finex™ Pressure Feed	HVLP
288942 thru 48 288955 thru 57 289036 thru 37 289111 289542 288962 thru 63 288970 thru 72 288979 thru 81	Graco AirPro™ Pressure Feed	Compliant
289008 thru 09 289017 thru 18 289026 thru 27	Graco AirPro™ Gravity Feed	Compliant
289032 thru 33 289995 thru 96	Graco AirPro™ Siphon Feed	Compliant
244399 thru 401 244575 thru 76 244579 thru 82 24A511 247936 thru 37	Graco Pro Xs™	Electrostatic
244572 thru 73	Graco Pro Xs™	Electrostatic Air Assisted
24C853 thru 57 288844 287926 249238 249242 249246	Graco G15/40	Air Assisted Airless
XTR500 thru 505 XTR700 thru 705	Graco XTR™	Airless

L85T10 L85M10 L85T16 L85M16 L60T10 L60T12 L60M10 L60M12 L60T16 L60M16 L60T18 L60M18 L60T11 L40T10 L40T16 L40T14 L40T15	Graco Pro Xp™	Electrostatic
H85T10 H85M10 H60T10 H60M10 H60T18 H60M18	Graco Pro Xp™	Electrostatic Air Assisted

Sincerely,

Joseph A Daniski
Product Engineering Manager

G15 and G40 Air-Assisted Spray Guns

Maximize efficiency and quality

Improve transfer efficiency and material usage with this operator-friendly manual spray gun

Ideal for wood products and general metal applications!

Designed to maximize efficiency and quality, G15 and G40 air-assist spray guns use the highest quality components for long lasting reliable performance. The AAF tip line is designed for soft spray and improved transfer efficiency.

Features | Resources | Specifications | Materials | Applications | Industries | Related Products

- High quality air-assisted spraying in a variety of applications
- All tips have a ring to retain the tip in the aircap
- Designed to minimize wear of replacement parts
- Improving transfer efficiency and material usage
- Trigger pull force is ultra-light, reducing operator fatigue and muscle stress

Manuals

3A0149E - G15/G40 Spray Gun, Instructions/Parts, English
(/content/dam/graco/tech_documents/manuals
E.pdf)
[other languages]
(#otherlanguagesmwbox0)

311001G, G15 and G40 AA Series Spray Guns, U.S. English
(/content/dam/graco/tech_documents/manuals
G.pdf)
[other languages]
(#otherlanguagesmwbox1)

Literature

336937EN G15/G40
(/content/dam/graco/ipd/literature/flyers/33693
E.pdf)
[other languages]
(#otherlanguagesmwbox2)

344795EN Wood Finishing Solutions
(/content/dam/graco/ipd/literature/flyers/344795/344795EN-B.pdf)
[other languages]
(#otherlanguagesmwbox3)

344831EN-C AAF Fine Finish Tips Flyer
(/content/dam/graco/ipd/literature/flyers/344831/344831EN-C.pdf)
[other languages]
(#otherlanguagesmwbox4)

Other Resources

Graco Finishing NESHAP Letter
(/content/dam/graco/ipd/literature/misc/gracofi
B.pdf)

G15 & G40 Spray Gun FAQ's
(http://graco.custhelp.com/app/home/kw/G15%20

View values in metric units.

G15 and G40 Air Assisted Spray Guns	
Maximum Working Fluid Pressure	
G15 Gun	1500 psi
G40 Gun	4000 psi
G15 and G40 Guns	
Maximum Working Air Pressure	100 psi
Maximum Gun Inlet Air Pressure for HVLP Operation	14 psi
Maximum Working Fluid Temperature	110°F
Air Consumption	See G15/G40 Instruction Manual.
Air Inlet	1/4 npsm (R1/4–19) compound male thread
Fluid Inlet	1/4 npsm
Weight	16 oz

Wetted Parts	Stainless Steel, Carbide, Ultra High Molecular Weight Polyethylene, Engineered Plastic, PTFE, Nylon, Fluoroelastomer
Noise Data	
Sound power at 20 psi (1.4 bar, 140 kPa)	76.8 dB(A)
Sound pressure at 20 psi (1.4 bar, 140 kPa)	66.9 dB(A)
Sound power at 100 psi (7 bar, 0.7 MPa)	89.9 dB(A)
Sound pressure at 100 psi (7 bar, 0.7 MPa)	80.0 dB(A)

SPECIFICATIONS

ULTRA II
SYNTHETIC FILTER MEDIA PADS AND BLANKETS

1. Scope

This specification covers synthetic media that is a component of paint booth systems. The media can be utilized in paint overspray (including powder coating, water borne paint and primer paint) and sanding dust collection

2. Construction

Media

The media is 100% dual stage polyester fiber. The media shall be white on the air entering side and have a dense needled green layer on the air leaving side The media shall have a non-migrating tackifier on the downstream side. No halogen, ammonium sulfate or ammonium phosphate shall be used in this media.

3. Size Availability

The media shall be available in pre-cut pads, blankets and bulk rolls.

4. Performance

The media shall meet the following minimum performance requirements for paint removal, based on using high solids bake enamel and particulate efficiency per ASHRAE Standard 52.2-2007. Performance shall be representative of all sizes offered.

Paint

Nominal Size	**20 x 20**
Test Flow Rate (CFM)	375
Initial Resistance (In W.G.)	.04
Final Resistance (In W.G.)	1.0
Average Paint Overspray Removal Efficiency	99.7%
Paint Holding Capacity	8.6 lb/ ft^2

Particulate

Nominal Size	**24 x 24**
Test Flow Rate (CFM)	1180
Initial Resistance (In W.G.)	.29
Final Resistance (In W.G.)	1.0
MERV	8

5. UL Classification

The media shall be classified per UL Standard 900 for flammability.

SPECIFICATIONS

Ultra Media

SYNTHETIC FILTER MEDIA PADS AND BLANKETS

1. Scope

This specification covers synthetic media that is a component of paint booth systems. The media can be utilized in paint overspray, sanding dust, oil mist or adhesive overspray collection.

2. Construction

Media

The media is 100% dual stage polyester fiber. The media shall be white on the air entering side and have a dense needled purple layer on the air leaving side. No halogen, ammonium sulfate or ammonium phosphate shall be used in this media.

3. Size Availability

The media shall be available in pre-cut pads, blankets and bulk rolls.

4. Performance

The media shall meet the following minimum performance requirements for paint removal, based on using high solids bake enamel. Performance shall be representative of all sizes offered.

Nominal Size	**20 x 20**
Rated Face Velocity (FPM)	150
Initial Resistance (In W.G.)	.06
Final Resistance (In W.G.)	1.0
Average Paint Overspray Removal Efficiency	99.6%
Paint Holding Capacity	11.1 Pounds

5. UL Classification

The media shall be classified by Underwriters Laboratories, Inc. Class 2 per UL Standard 900.

*There's a **REASON** it's called . . .*

ULTRA MEDIA

a CLARCOR company

America's Leader in Synthetic Overspray Media

ATI, America's Leader in synthetic overspray media, developed Ultra Media to provide the *ultimate* in: • performance • paint removal efficiency • paint holding capacity • applications flexibility

Ultra Media is a substantial – and important – upgrade from paper/poly or fiberglass media. It keeps stacks, motors, *(and parking lots!)* free of paint, and is an exceptional primary overspray media or 2nd stage product.

This 1″ two-ply media is ideally suited to high volume production environments. Ultra Media is widely used in the aerospace industry, for wood finishing operations, tier 1/2 automotive and general metal finishing.

Ultra Media is effective on a wide range of commercial and industrial paints, including high solids, solvent-based and water-based paints and clear coats. Performance for two common coatings types is:

Paint Type	Air Flow	Initial Static Resistance	Avg. Removal Efficiency*
High Solids	150 FPM	.05″ WG	99.76%
Water-Based	150 FPM	.05″ WG	99.74%

* *Independent lab test results available upon request.*

Ultra Media features graduated denier fiber construction, a high-efficiency needled back layer, and a face design engineered to depth-load both liquid and solid overspray, for highest holding capacity.

Ultra Media is manufactured with consistency to produce a high integrity, high performance paint overspray media.

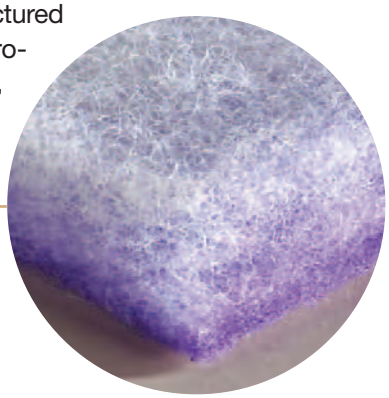

"Clean Air Solutions for a Perfect Finish"

*There's a **REASON** it's called . . .*

ULTRA MEDIA

Ultra Media is the "ultimate" in paint overspray filtration.

Link Panels

Ultra Media is available in thirteen standard roll widths, pads, panels and multi-pocket bags. As a value-added service, ATI will perforate blankets to booth size at no additional charge.

Standard panel sizes are available in the following face dimensions:

12X24	**20X20**
16X20	**20X25**
16X25	**24X24**

Ultra panels are also available in link panel form and made to order sizes.

Ultra Bags

Ultra Bags are manufactured with two and three pockets. Ultra Bags are available in 13 standard sizes and four depths. Ultra multi-pocket bags are also available in custom configurations to fit specific booth requirements.

Main Sizes:	# of Pockets	Main Sizes:	# of Pockets
20x20x12	2 and 3	24x24x12	2 and 3
20x20x15	2 and 3	24x24x15	2 and 3
20x20x20	2 and 3	24x24x20	2 and 3
20x25x12	2 and 3	12x24x12	1
20x25x15	2 and 3	12x24x15	1
20x25x20	2 and 3	12x24x20	1

We believe that ***no matter what your requirements for filter depth and service life,*** there's an Ultra Media product that provides exactly the combination you're looking for.

Ultra Media in NESHAP Systems

2-stage OSM-100 system for existing booths (Shown with Ultra Media in 1st stage)

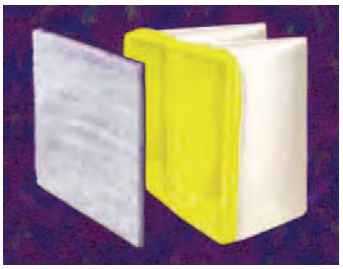

3-stage A-3000 system for new booths (Shown with Ultra Media in 1st stage)

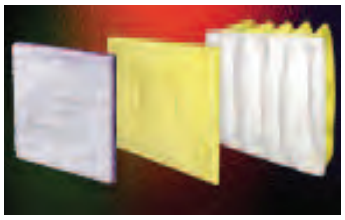

Protect property, parts, and personnel . . . *to the ultimate!* – with Ultra Media from ATI

ATi a CLARCOR company

Air Technologies, Inc.
1612 North Davis Avenue, Ottawa, Kansas 66067

E-Mail: ati@ati-filters.com
www.ati-filters.com
1-800-624-8739
Fax: 785-242-8700

Please read and save these instructions. Read carefully before attempting to assemble, install, operate or maintain the product described. Protect yourself and others by observing all safety information. Failure to comply with instructions could result in personal injury and/or property damage! Retain instructions for future reference.

Dayton® Tubeaxial Fans

Description

Dayton tubeaxial fans are designed and built for use as an exhauster in paint spray booths, cleaning tanks, and mixing rooms. Can also be used in industrial ventilation systems handling temperatures up to a maximum of 200°F.

Motor, drive belts, and self-aligning sealed ball bearings are isolated from air stream so that contaminated air or vapors can be exhausted without damage to drive or motor. Use in atmospheres corrosive to aluminum is not recommended as damage to fan blade may result.

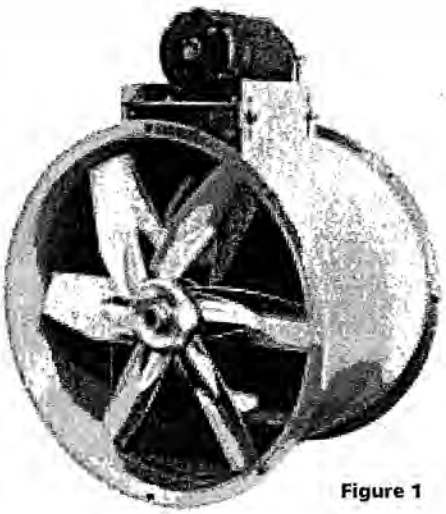

Figure 1

Certified Rating for Air and Sound

Dayton Electric Mfg. Co. certifies that the tubeaxial fans shown herein are licensed to bear the AMCA Seal. The air performance shown is based on tests performed in accordance with AMCA Standard 210, "Laboratory Methods of Testing Fans for Rating" and rated in accordance with AMCA Publication 211, "Certified Rating Program - Air Performance."

The sound performance shown is based on tests performed in accordance with AMCA Standard 300, "Reverberant Room Method for Sound Testing of Fans." The sound power level ratings shown are in decibels referred tp 10^{-12} Watts. The A-weighted sound levels shown are for Installation Type B: Free Inlet, Ducted Outlet. Sound levels shown do not include the effects of end reflection.

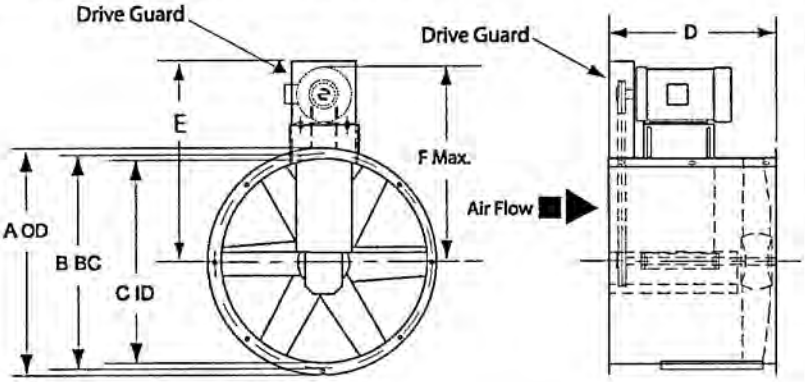

Figure 2

Unpacking

When unpacking, consider the following:

1. Double groove fan pulley with malleable split taper bushing is assembled on fan.
2. Motor, motor pulley, and belts packed separately when fan is ordered complete.
3. Remove jackscrews from plastic bag attached to motor mounting base for use in assembly. **NOTE:** Not using the jackscrews may shorten bearing life.

Dimensions

Model	A	B	C	D	E	F	Shaft Diameter
3C411A	27.00	25.75	24.38	18.00	23.81	24.00	1.000
3C412A	33.75	32.25	30.50	24.00	29.84	29.00	1.188
3C413A	37.75	36.25	34.50	29.00	31.88	31.00	1.188
3C414A	39.75	38.25	36.50	29.00	32.91	32.00	1.188
3C415C	45.75	44.25	42.50	32.00	35.65	37.00	1.438
3C416C	51.75	50.25	48.50	36.00	38.79	42.00	1.438
4C659A	14.69	13.50	12.19	12.00	12.42	17.00	0.625
4C660A	18.75	17.50	16.06	16.50	19.06	19.00	0.875
4C661A	21.13	19.88	18.04	16.50	20.48	20.50	0.875
4C661A	21.13	19.88	18.04	16.50	20.48	20.50	0.875

Dayton® Tubeaxial Fans

Specifications

Model	Drive Requirements †					
	Motor HP	Fan RPM	Motor Sheave Belt Pitch Diameter	RMA* Belt	Fan Sheave Belt Pitch Diameter	Grooves
3C411A	1	1312	3.4-A	A48	4.5-A	2
	1½	1466	3.8-A	A48	4.5-A	2
	2	1688	4.4-A	A50	4.5-A	2
	3	1910	5.0-A	A53	4.5-A	2
3C412A	1½	1030	3.4-A	A55	5.8-A	2
	2	1146	3.8-A	A55	5.8-A	2
	3	1320	4.4-A	A60	5.8-A	2
	5	1551	5.2-A	A60	5.8-A	2
3C413A	2	936	3.4-A	A60	6.4-A	2
	3	1074	3.8-A	A64	6.4-A	2
	5	1251	4.6-A	A66	6.4-A	2
3C414A	2	837	3.8-A	A66	8.0-A	2
	3	964	4.4-A	A71	8.0-A	2
	5	1133	5.2-A	A71	8.0-A	2
3C415C	3	746	3.2-A	A71	7.6-A	2
	5	880	3.8-A	A75	7.6-A	2
	7½	1013	4.4-A	A75	7.6-A	2
	10	1147	5.0-A	A75	7.6-A	2
3C416C	5	731	4.4-A	A85	10.6-A	2
	7½	827	5.0-A	A90	10.6-A	2
	10	891	5.4-A	A90	10.6-A	2
4C659A	1/3	2090	2.3-A	3L280	2.0-A	2
	1/2	2253	2.6-A	3L290	2.0-A	2
	3/4	2877	3.2-A	3L300	2.0-A	2
4C660A	1/3	1570	1.5-A	A31	2.0-A	1
	1/2	1800	2.1-A	A31	2.0-A	1
	3/4	2221	2.6-A	A33	2.0-A	1
	1	2547	3.0-A	A33	2.0-A	1
4C661A	1/3	1375	2.1-A	A38	3.0-A	1
	1/2	1487	2.6-A	A38	3.0-A	1
	3/4	1719	3.0-A	A38	3.0-A	1
	1	1988	3.5-A	A38	3.0-A	1
	1½	2255	4.0-A	A38	3.0-A	1

(†) Drive requirements show minimum Motor HP required. Other drives may be used, provided they meet the Fan RPM stated above and have adequate load carrying capacity.

(*) Rubber Manufacturer's Association.

General Safety Information

1. Follow all local electrical and safety codes, as well as the National Electrical Code (NEC) and the Occupational Safety and Health Act (OSHA) in the United States.
2. Motor must be securely and adequately grounded. This can be accomplished by wiring with a grounded, metal-clad raceway system by using a separate ground wire connected to the bare metal of the motor frame, or other suitable means.
3. Always disconnect power source before working on or near a motor or its connected load. If the power disconnect point is out-of-sight, lock it in the open position and tag to prevent unexpected application of power.
4. All moving parts should be guarded.
5. Be careful when touching the exterior of an operating motor - it may be hot enough to be painful or cause injury. With modern motors this condition is normal if rated at normal load and voltage - modern motors are built to operate at higher temperatures.
6. Make certain that the power source conforms to the requirements of your equipment.
7. Wiping or cleaning rags and other flammable waste materials must be placed in a tightly closed metal container and disposed of later in the proper fashion.
8. When cleaning electrical or electronic equipment, always use an approved cleaning agent such as dry cleaning solvent.

Models 3C411A thru 3C414A, 3C415C, 3C416C and 4C659A thru 4C661A

Western Trailers Actual Operations 0.3 inches static pressure

Performance

Model	Blade Dia.	CFM and Sound Power LwA Decibels at Static Pressure Shown									
		Free Air	1/8" S.P.	1/4" S.P.	1/2" S.P.	3/4" S.P.	1" S.P.	1¼" S.P.	Fan RPM	Motor HP	Max. BHP*
4C659A	12"	1767	1667	1561	—	—	—	—	2090	1/3	0.24
		84	83	82	—	—	—	—			
		1904	1812	1719	1429	—	—	—	2253	1/2	0.31
		86	85	84	83	—	—	—			
		2432	2360	2287	2126	1905	—	—	2877	3/4	0.60
		92	92	91	91	90	—	—			
4C660A	16"	2379	2152	1820	779	—	—	—	1570	1/3	0.25
		84	84	86	86	—	—	—			
		2727	2530	2288	1335	711	—	—	1800	1/2	0.41
		86	86	87	87	87	—	—			
		3365	3205	3045	2576	1685	1103	—	2221	3/4	0.69
		91	91	92	93	93	93	—			
		3859	3720	3580	3238	2744	1892	1355	2547	1	1.00
		95	95	96	96	97	97	97			
4C661A	18"	3230	2976	2680	1254	—	—	—	1375	1/3	0.34
		85	84	86	86	—	—	—			
		3494	3261	2997	2192	794	—	—	1487	1/2	0.48
		85	85	26	88	88	—	—			
		4039	3841	3624	3112	1850	923	—	1719	3/4	0.72
		87	87	87	93	91	91	—			
		4671	4504	4321	3914	3421	2163	—	1988	1	0.91
		90	90	90	93	95	95	—			
		5298	5152	4994	4660	3803	3803	2705	2255	1½	1.29
		94	93	93	95	98	98	98			
3C411A	24"	7085	6742	5484	5484	3164	—	—	1312	1	0.98
		89	88	92	92	92	—	—			
		7925	7626	6562	6562	5634	2914	—	1468	1½	1.38
		92	90	93	93	95	95	—			
		9112	8856	7983	7983	7290	6445	—	1688	2	1.98
		96	96	97	97	98	98	—			
		10310	10084	9845	9332	8769	8143	7398	1910	3	2.77
		99	98	98	98	98	98	98			
3C412A	30"	10955	10415	9815	8395	—	—	—	1030	1½	1.40
		90	89	89	92	—	—	—			
		12190	11710	11180	9990	8485	—	—	1146	2	1.90
		93	94	94	94	96	—	—			
		14040	13630	13180	12220	11105	9740	—	1320	3	2.91
		97	96	96	96	98	99	—			
		16495	16150	15785	14995	14145	13190	12125	1551	5	4.72
		102	101	100	100	100	101	104			
3C413A	34"	14430	13760	13020	11285	7155	—	—	936	2	1.83
		94	92	92	95	96	—	—			
		16560	15985	15350	13965	12305	7750	—	1074	3	2.78
		100	100	99	99	101	103	—			
		19290	18800	18280	17150	15880	14445	12180	1251	5	4.36
		102	103	101	101	101	103	104			

(*) BHP does not include drive losses.

NOTE: LwA Sound Power Levels are shown. Contact your representative or various engineering documents if other ratings such as 8 octave band dBA levels, dBA or sone levels, are required.

Dayton® Tubeaxial Fans

Performance (Continued)

Model	Blade Dia.	CFM and Sound Power LwA Decibels at Static Pressure Shown									
		Free Air	1/8" S.P.	1/4" S.P.	1/2" S.P.	3/4" S.P.	1" S.P.	1¼" S.P.	Fan RPM	Motor HP	Max. BHP
3C414A	36"	15255	14455	13570	11430	—	—	—	837	2	1.82
		92	90	90	94	—	—	—			
		17570	16890	16135	14450	12345	—	—	964	3	2.79
		98	98	97	98	100	—	—			
		20650	20080	19460	18135	16605	14825	—	1133	5	4.53
		100	101	100	99	100	102	—			
3C415C	42"	21465	20430	19275	16565	—	—	—	746	3	2.76
		91	91	92	95	—	—	—			
		25320	24460	23505	21435	18965	—	—	880	5	4.53
		98	98	98	99	100	—	—			
		29150	28410	27610	25900	23960	21775	18120	1013	7 ½	6.88
		100	101	101	102	103	104	103			
		33005	32355	31670	30185	28620	26850	24920	1147	10	9.98
		104	104	104	105	106	107	107			
3C416C	48"	31260	30070	28745	25810	22170	—	—	731	5	5.00
		100	99	98	98	100	—	—			
		35365	34325	33185	30750	27900	24390	—	827	7 ½	7.25
		102	102	102	101	101	102	—			
		38100	37140	36105	33885	31380	28550	24060	891	10	9.04
		105	104	104	104	103	104	105			

Assembly

1. Before assembling the fan, check to be sure that all fasteners are tightly secured, particularly the fan and blade shaft.
   a. Rotate the fan blade by hand to make sure it does not strike the fan housing. If it does strike it, remove the bearing cover and loosen the four bolts on the opposite side of the bearing stand. Two of these bolts are inside the belt tunnel. This will allow realignment of the shaft and fan blade in the fan housing.
   b. All bolts should then be secured and the fan blade turned by hand to confirm the alignment.
2. Insert the 1/2" x 6" jackscrews into the motor base. Attach motor pulley on motor shaft and mount motor.
   a. To install belts on fan shaft pulley, first remove bearing cover (see Figure 5, Ref. No. 12) to gain access to belt tunnel. Install belts loosely over fan and motor pulleys.
   b. Check pulley alignment and adjust the belt tension using the motor base jackscrews. Motor base should be level after installation. To achieve proper belt tension, belt should depress its width when pressed firmly inward midway between the pulleys.
   c. Recheck belt tension after first 48 hours of operation, and regularly thereafter, depending on frequency of operation.
3. Assemble drive guard (see Figure 5, Ref. No. 19). Drive guard is secured to the motor base through the support brackets with jackscrew and jackscrew nut (Ref. No. 17). The drive guard end is attached to the housing flange with the bolt, flatwasher, and nut provided.

Installation

1. The fan should be securely mounted in a rigid framework. (See Figure 3 for possible mounting arrangements).
2. Before initial operation of the fan, tighten set screws according to Table 1.
3. Install remaining auxiliary components (motor starter, shutter, intake guard, etc.).

⚠WARNING **If the fan is located less than seven feet above the floor, guarding is required in accordance with OSHA (Occupational Safety and Health Act) requirements.**

4. Connect power to the motor, using an approved wiring method, (Motor terminal connection data is provided on the motor nameplate or on the motor terminal box cover plate. Use adequate size wire for all branch and feeder runs).
5. Momentarily energize circuit to be sure that fan rotation is same as shown on nameplate. If it is not, see motor nameplate.

⚠WARNING **A lockable disconnect switch should be located near the fan so power can be positively disconnected while servicing the unit. The fan tube and motor must be electrically grounded to suitable electrical ground such as a grounded water pipe, or properly grounded metallic raceway or ground wire system.**

6. Unit is ready for operation.

IMPORTANT: Before activating the fan, double-check to ensure that there are no obstructions (framing, studs, shutters, etc.) which would interfere with fan blade operation.

Maintenance

⚠WARNING **Make certain that the power source is disconnected before attempting to service or disassemble any components. If the power disconnect is out-of-sight, lock it in the open position and tag to prevent application of power.**

Models 3C411A thru 3C414A, 3C415C, 3C416C, and 4C659A thru 4C661A

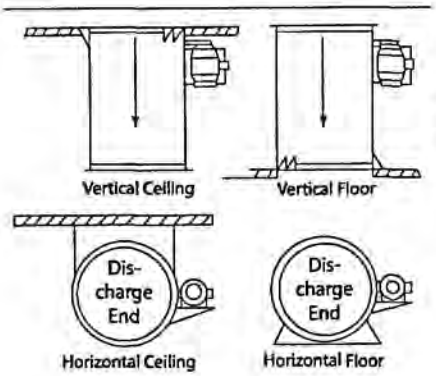

Figure 3

Maintenance (Continued)

BELT DRIVES

Belt tension should be checked after first 48 hours of operation and regularly thereafter depending on frequency of operation.

1. Belt should depress its width when pressed firmly inward at midway point between the pulleys. Too much tension will damage bearings. Belts should be tight enough to prevent slippage.
2. When replacing worn belts, replace both belts with a new matched pair. Replace the motor pulley if a "shoulder" is worn in groove.

⚠WARNING **Do not operate fan at speeds higher than shown on fan nameplate. When replacing drive pulleys, replace with pulleys of same pitch diameter. Do not replace fan pulley with one smaller or larger in diameter. The pulley ratios are set so that the motor will not be overloaded.**

CLEANING

When checking for proper belt tension, it is advisable to clean the propeller blades at this time. This will remove any accumulated dirt which could cause unbalance and have an adverse affect on air flow.

SHAFT BEARINGS

Bearings are prelubricated and sealed and do not require relubrication. Should shaft bearings require replacement, replace with bearings equal to original equipment, using the following procedure:

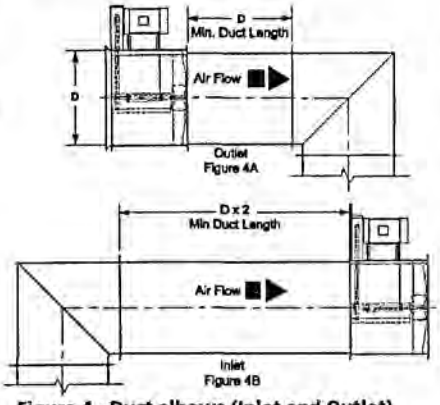

Figure 4 - Duct elbows (Inlet and Outlet) Recommendations
Note: D equals fan blade diameter

⚠ CAUTION **Before proceeding to replace bearings be sure the fan blade is securely held in position with ropes or slings to prevent its dropping. This is especially important if fan is mounted vertically.**

1. Remove outer bearing cover.
2. Unbolt the upper half of die formed housing and install new bearings into neoprene rings removed from outer race of old bearings.
3. Check correct position of fan blade in housing and position new bearings in die formed recess and tighten setscrews.
4. Replace die formed bearing cap and reinstall four holding bolts.

NOTE: If locking collar type bearings are used, collar must first be positioned against inner race on bearing nearest fan blade and turned in direction of fan blade rotation with drift pin and hammer until it locks. Locking collars must be on inboard (facing) sides of bearings. Secure bearing to shaft with setscrew. Lock and secure other bearing to the shaft in similar fashion.

SET SCREW TIGHTENING SCHEDULE

1. After 500 operating hours or three months, whichever comes first, tighten set screws to the full recommended torque.
2. At least once a year, tighten set screws to the full recommended torque.

PROCEDURE FOR TIGHTENING SET SCREWS IN BEARINGS AND HUBS

One Set Screw Application

Using a torque wrench, tighten the set screw to the torque recommended in Table 1.

Two Set Screw Application

1. Using a torque wrench, tighten one set screw to half of the torque recommended in Table 1.
2. Tighten the second set screw to the full recommended torque.
3. Tighten the first set screw to the full recommended torque.

Table 1. Recommended Tightening Torque for Set Screws

Set Screw Diameter	Torque (in-lbs)
#10	35
1/4	80
5/16	126
3/8	240
7/16	384
1/2	744
9/16	1080
5/8	1500
3/4	2580
7/8	3600
1	5400

FAN BLADE

1. Weld gaps in the blade have been incorporated to prevent condensation from accumulating within the blades.
2 To replace fan blade remove the roll pin in front of the hub by driving out with a drift pin.

NOTE: 4C659A, 4C660A & 4C661A have keyway and setscrew only.

3. Remove the two setscrews in rear of hub.
4. When reinstalling fan blade, first insert the roll pin, then fasten the rear hub setscrews.

For Repair Parts, call 1-800-323-0620

24 hours a day - 365 days a year

Please provide following information:
-Model number
-Serial number (if any)
-Part descriptions and number as shown in parts list

Address parts correspondence to:
Grainger Parts
P.O. Box 3074
1657 Shermer Road
Northbrook, IL 60065-3074 U.S.A.

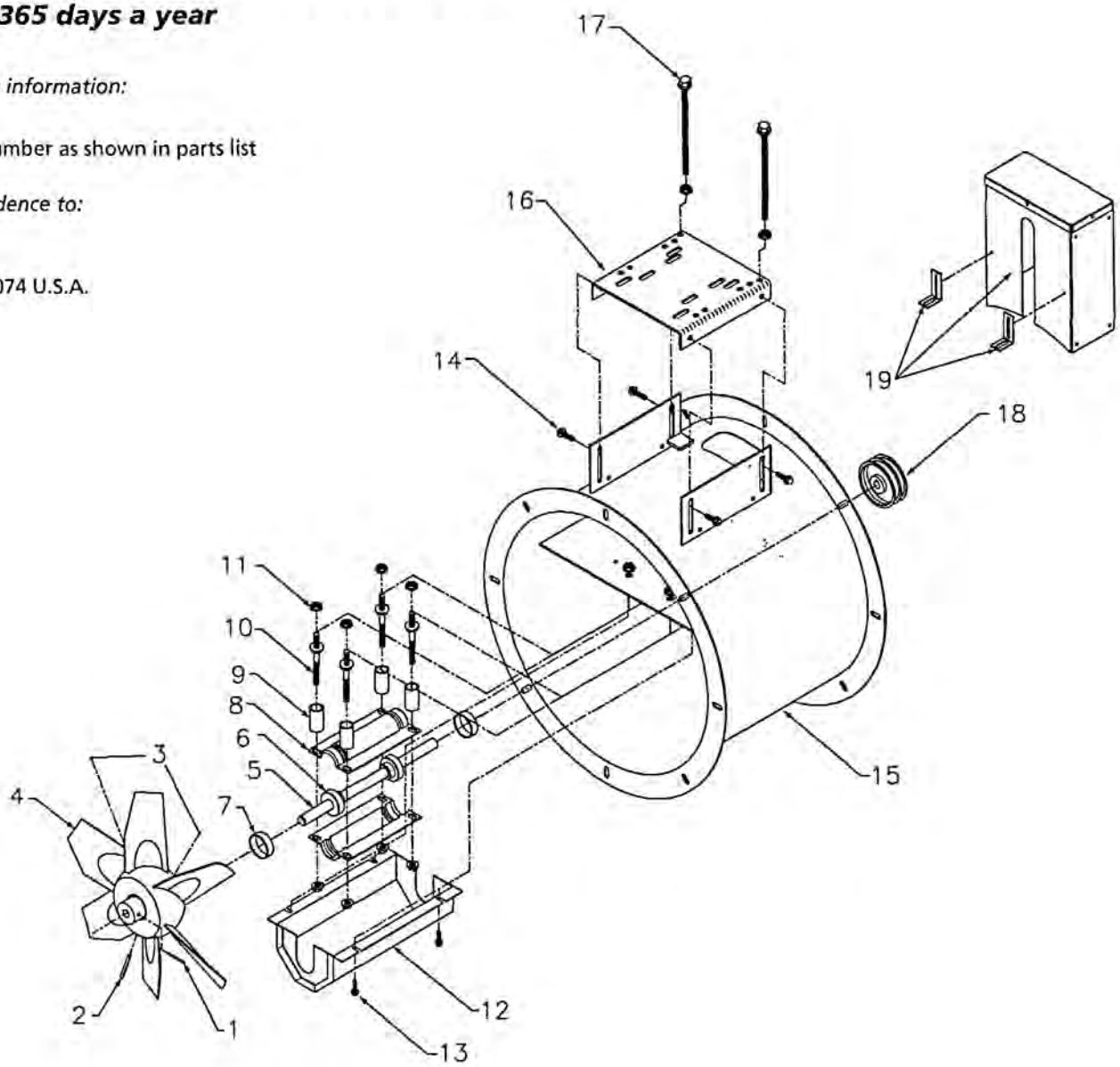

Figure 5

Repair Parts List

	Description	Part Number for Models: 3C411A	3C412A	3C413A	3C414A	3C415C	3C416C	4C659A	4C660A	4C661A	Qty.
1	1/4 x 1 3/4" Roll pin	*	—	—	—	—	—	—	—	—	1
1	3/16" x 3/4" Key	—	—	—	—	—	—	*	*	*	1
1	5/16 x 1 3/4" Roll pin	—	*	*	*	—	—	—	—	—	1
2	5/16 x 2 1/4" Roll pin	—	—	—	—	*	*	—	—	—	1
3	5/16 x 5/16" Socket head setscrew	*	*	*	*	*	*	*	*	*	2
4	Fan propeller	4C664	3C418	3C419	3C420	3C421	3C422	4C662	4C663	4C715	1
5	Shaft	161241	181134	141510	141510	161249	151055	161306	161305	161305	1
6	Bearing	991005	991006	991006	991006	991018	991018	991012	991019	991019	2
7	Rubber ring	991220	991229	991229	991229	991230	991230	991219	991220	991220	2
8	Bearing cap	181166	161220	131046	131046	161245	161245	161314	121100	121100	2
9	Support Post	941485	941486	941486	941486	941487	941487	941484	941485	941485	4
10	3/8-16" x 1 3/4 Bearing support bolt	941218	941218	941218	941218	941218	941218	3/8 -16-1 3/4	941218	941218	4
11	3/8-16" Bearing bolt nut	*	*	*	*	*	*	*(4 used)	*	*	8
12	Bearing cover	165087	165088	165089	165089	165090	165091	165163	165009	165009	1
13	1/4 -20 x 3/4" Bearing cover bolt	*	*	*	*	*	*	*	*	*	4
14	3/8-16 x 1" Motor Base Bolt	*	*	*	*	—	—	*	*	*	4
14	1/2-13 x 1 1/2 Motor Base Bolt	—	—	—	*	*	—	—	—	—	4
15	Fan tube assembly	165308	165309	165110	165310	165112	165113	165161	165306	165307	4
16	Motor base	161397	161398	161398	161398	161242	161242	161396	161396	161396	1
17	Mounting hardware package	165103	165115	165115	165115	165116	165116	165120	165193	165193	1
18	Fan pulley	2AK49H	2TB62PI	2TB68PI	2AK84H	2TB80Q	2TB110Q	2AK22	MA22 x 7/8	AK32	1
19	Drive Guard Kits	169395	169397	169397	169397	169398	1639399	169393	169394	169391	1

(*) Standard hardware item available locally.

Dayton® Tubeaxial Fans

LIMITED WARRANTY

DAYTON ONE-YEAR LIMITED WARRANTY. *Dayton® Tubeaxial Fans, models covered in this manual are warranted by Dayton Electric Mfg. Co. (Dayton) to the original user against defects in workmanship or materials under normal use for one year after date of purchase. Any part which is determined to be defective in material or workmanship and returned to an authorized service location, as Dayton designates, shipping costs prepaid, will be, as the exclusive remedy, repaired or replaced at Dayton's option. For limited warranty claim procedures, see PROMPT DISPOSITION below. This limited warranty gives purchases specific legal rights which vary from jurisdiction to jurisdiction.*

LIMITATION OF LIABILITY. *To the extent allowable under applicable law, Dayton's liability for consequential and incidental damages is expressly disclaimed. Dayton's liability in all events is limited to and shall not exceed the purchase price paid.*

WARRANTY DISCLAIMER. *Dayton has made a diligent effort to provide product information and illustrate the products in this literature accurately; however, such information and illustrations are for the sole purpose of identification, and do not express or imply a warranty that the products are MERCHANTABLE, or FIT FOR A PARTICULAR PURPOSE, or that the products will necessarily conform to the illustrations or description. Except as provided below, no warranty or affirmation of fact, expressed or implied, other than as stated in the "LIMITED WARRANTY" above is made or authorized by Dayton.*

PRODUCT SUITABILITY. *Many jurisdictions have codes and regulations governing sales, construction, installation, and/or use of products for certain purposes, which may vary from those in neighboring areas. While Dayton attempts to assure that its products comply with such codes, it cannot guarantee compliance, and cannot be responsible for how the product is installed or used. Before purchase and use of a product, review the product applications, and all applicable national and local codes and regulations, and be sure that the product, installation, and use will comply with them.*

Certain aspects of disclaimers are not applicable to consumer products; e.g., (a) some jurisdictions do not allow the exclusion or limitation of incidental or consequential damages, so the above limitation or exclusion may not apply to you; (b) also, some jurisdictions do not allow a limitation on how long an implied warranty lasts, consequently the above limitation may not apply to you; and (c) by law, during the period of this Limited Warranty, any implied warranties of implied merchantability or fitness for a particular purpose applicable to consumer products purchased by consumers, may not be excluded or otherwise disclaimed.

PROMPT DISPOSITION. *Dayton will make a good faith effort for prompt correction or other adjustment with respect to any product which proves to be defective within limited warranty. For any product believed to be defective within limited warranty, first write or call dealer from whom the product was purchased. Dealer will give additional directions. If unable to resolve satisfactorily, write to Dayton at address below, giving dealer's name, address, date, and number of dealer's invoice, and describing the nature of the defect. Title and risk of loss pass to buyer on delivery to common carrier. If product was damaged in transit to you, file claim with carrier.*

Manufactured for Dayton Electric Mfg. Co., 5959 W. Howard St., Niles, Illinois 60714 U.S.A.

Donaldson®
Torit®

Downflo® II Dust Collectors

POWERED BY
ULTRA-WEB®
High Efficiency Nanofiber Filters Built to Last

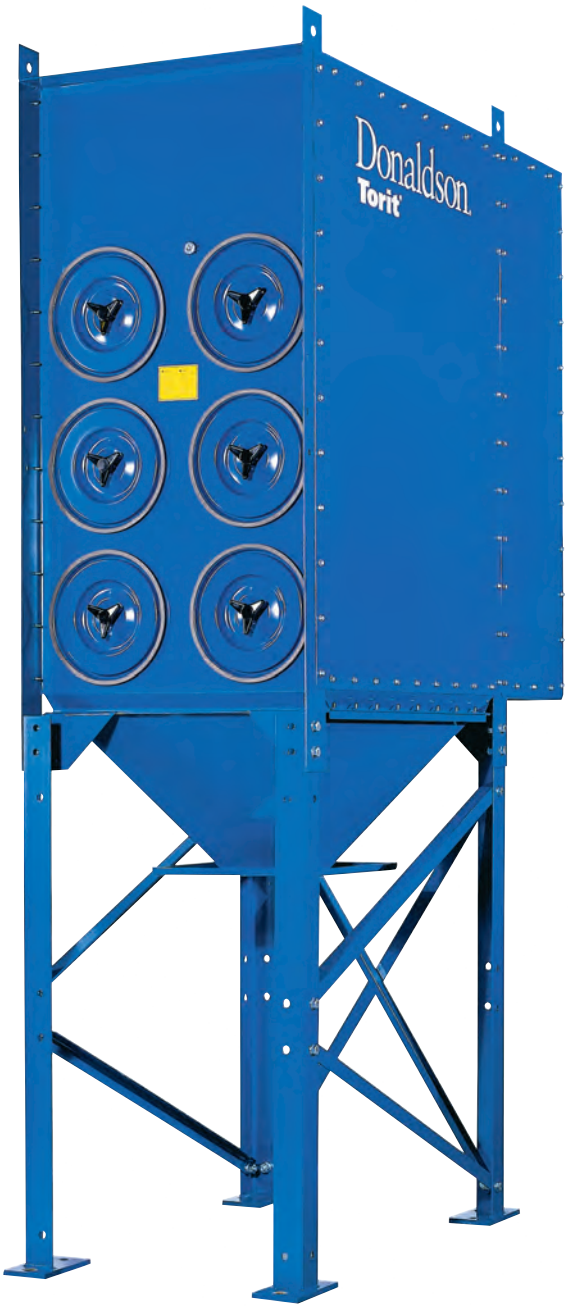

Donaldson

Downflo® II

Engineered for Reliable Performance

The longstanding, most influential cartridge collector in industrial air filtration history, the Donaldson® Torit® Downflo® II (DFT), delivers optimum performance and is one of the best values available in today's marketplace. A leader in the industry for over 20 years with thousands of successful installations in place, DFT dust collectors ensure steadfast, trouble-free operation.

The DFT advantages can be found in the collector's patented design and components. Now featuring a ledgeless design in combination with proprietary Ultra-Web® filter media and patented cleaning technology, the DFT continues its strong performance in traditional applications such as metalworking. It also generates interest and respect in process applications where ledgeless construction is often a requirement. Providing higher efficiency and smaller footprints than any baghouse collector or even other cartridge collectors, DFT adds up to long-term savings and improved performance in many applications.

A Leader in the Industry *for over* 20 *Years*

DFT Offers:

- **Ledgeless construction** Eliminates dust build-up and accommodates wash down environments.
- **Compact design** Minimizes floor space.
- **Powerful performance** Patented ExtraLife™ Filter Cleaning System provides 30% more cleaning energy.
- **Cost savings** Fewer filter changeouts, reduced filter disposal costs, less energy usage.
- **Reliability** Exceptional results for over 20 years and counting.
- **Easy system set up**
- **Easy maintenance**
- **10-year warranty**

DFT 3-6

Sizes & Operations

Normal Operation

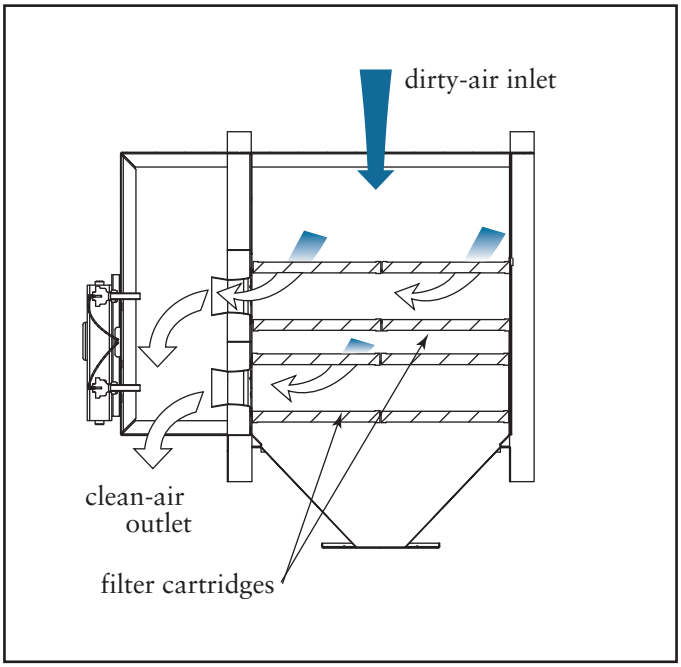

Pulse Cleaning Technology ExtraLife Filter Cleaning System uses proprietary, computer-modeled pulse cleaning technology to easily "pulse off" dust from the surface of the filter, improving filtration efficiency and prolonging filter life. The red lines in the illustration show the increased pressure at the front of the Downflo filter generated by the ExtraLife system. The blue line shows the pulse signature of a standard cartridge collector.

Downflo Pulse Pressure Gradients

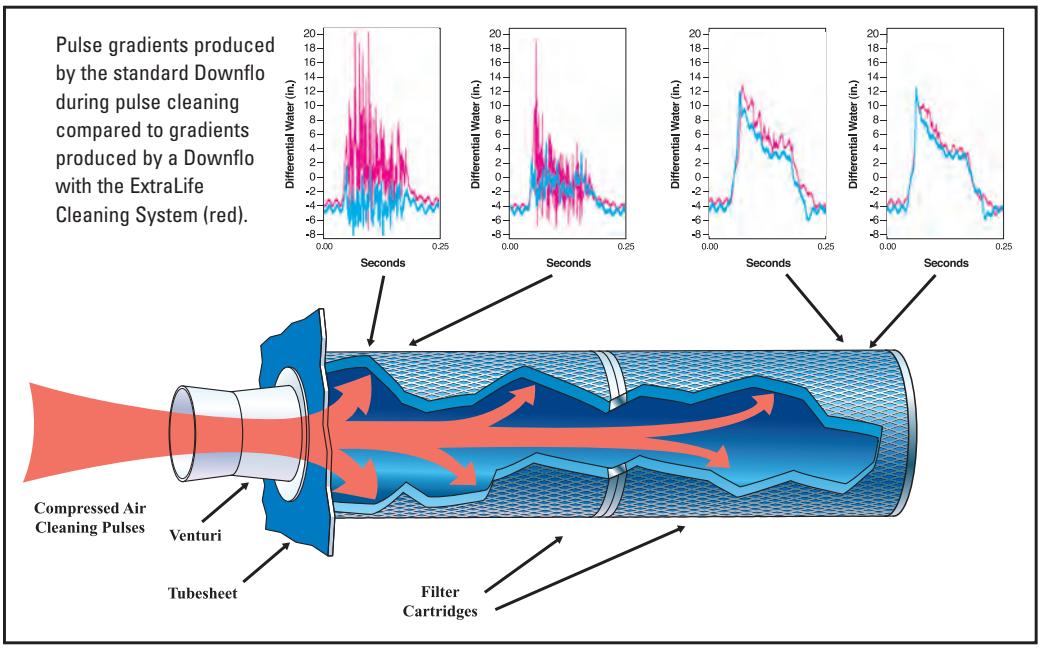

Downflo® II

Dimensions & Specifications

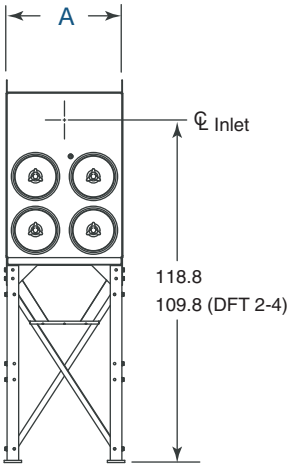

Front View
DFT 2-Models

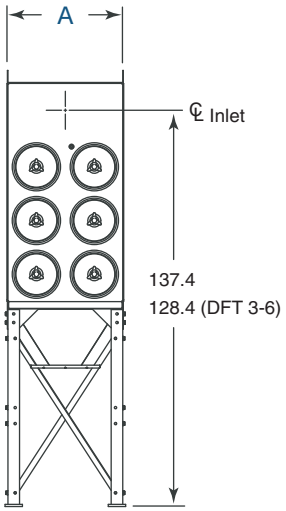

Front View
DFT 3-Models

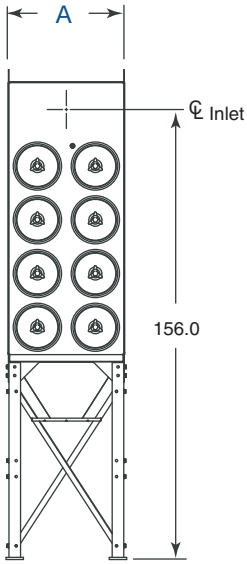

Front View
DFT 4-Models

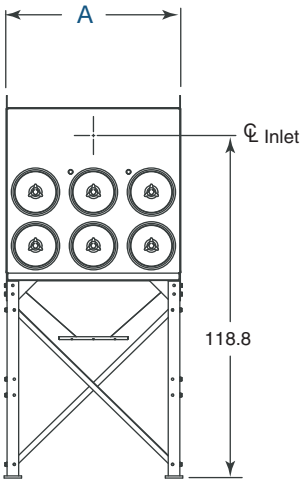

Front View
DFT 2-12
(3-Wide Models)

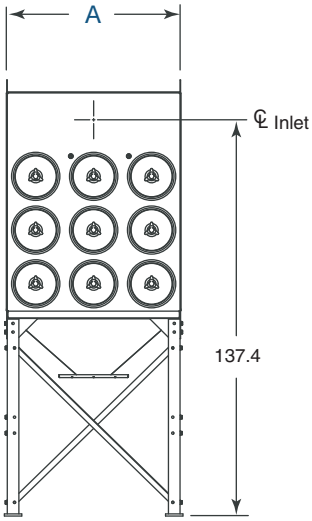

Front View
DFT 3-18
(3-Wide Models)

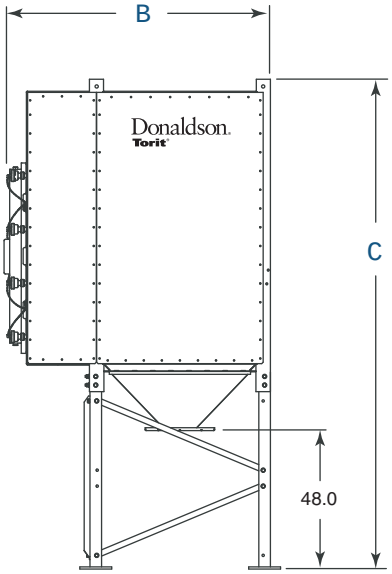

Left Side View
All Models

DFT Standard Operating Conditions			
Seismic Rating (zone)	4	Compressed Air Required (psig)	90-100
Wind Load Rating (mph)	100	Valves and controls	50/60 Khz
Housing Rating ("wg)	+15 / -20		

Downflo® II

Dimensions & Specifications

Model*	Nominal Airflow Range** (cfm)	No. of Filters	Ultra-Web Filter Area (ft^2)	No. of Valves	Shipping Weight (lbs)	Dimensions (inches) A	B	C
DFT 2 - 4	500-3,150	4	760	4	1,678	40.0	67.8	117.3
2 - 8	1,020-6,300	8	1,520	4	1,678	40.0	94.5	132.7
2 - 12	1,525-9,450	12	2,280	6	2,392	60.0	94.5	132.7
2 - 16	2,030-12,600	16	3,040	8	3,300	80.0	94.5	132.7
2 - 24	3,050-18,900	24	4,560	12	4,600	120.0	94.5	132.7
2 - 36	4,570-28,350	36	6,840	18	7,000	180.0	94.5	132.7
DFT 3 - 6	760-4,720	6	1,140	6	1,678	40.0	64.5	136.0
3 - 12	1,525-9,450	12	2,280	6	2,078	40.0	94.5	151.3
3 - 18	2,285-14,175	18	3,420	9	2,942	60.0	94.5	151.3
3 - 24	3,050-18,900	24	4,560	12	4,200	80.0	94.5	151.3
3 - 36	4,570-28,350	36	6,840	18	6,100	120.0	94.5	151.3
3 - 48	6,100-37,800	48	9,120	24	8,000	160.0	94.5	151.3
3 - 54	6,850-42,520	54	10,260	27	8,500	180.0	94.5	151.3
3 - 60	7,620-47,240	60	11,400	30	10,100	200.0	94.5	151.3
3 - 72	9,140-56,700	72	13,680	36	12,000	240.0	94.5	151.3
DFT 4 - 16	2,030-12,600	16	3,040	8	2,500	40.0	94.5	169.9
4 - 32	4,060-25,200	32	6,080	16	4,600	80.0	94.5	169.9
4 - 48	6,100-37,800	48	9,120	24	6,500	120.0	94.5	169.9
4 - 64	8,130-50,390	64	12,160	32	8,500	160.0	94.5	169.9
4 - 80	10,160-62,990	80	15,200	40	10,300	200.0	94.5	169.9
4 - 96	12,190-75,590	96	18,240	48	12,100	240.0	94.5	169.9
4 -112	14,220-88,190	112	21,280	56	14,500	280.0	94.5	169.9
4 -128	16,260-100,790	128	24,320	64	16,000	320.0	94.5	169.9

* The first number indicates number of filter rows, and the second number indicates number of cartridges.
** Based on clean filters.

Downflo® II

Cartridge Filter Technology

Ultra-Web® Nanofiber Filter Media The distinguishing factor in Donaldson Torit's cartridge filters is nanofiber filtration technology, which traps more dust on the surface of the filter than conventional depth loading types of filter media such as cellulose, polyester or cellulose/polyester blends. The resulting dust cake is easily cleaned off during the automated collector cleaning cycles providing cleaner air longer, with a minimum MERV* 13 efficiency rating based on ASHRAE 52.2 - 1999 test standards.

Nanofiber Media

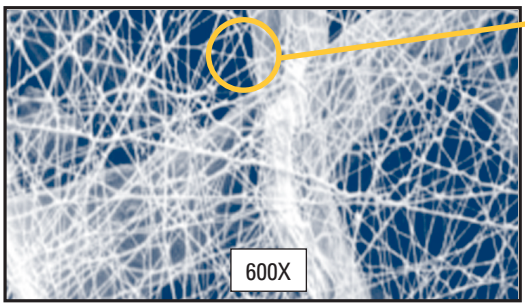

Nanofiber technology is available in all Ultra-Web and Fibra-Web filter cartridges.

10 micron

Commodity Filter Media

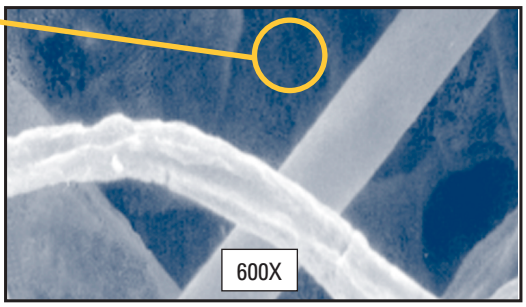

Conventional media has spaces of up to 60 microns between fibers, allowing dust to become deeply embedded thereby shortening filter life.

DFT Filter Media Pleats Shorter and stiffer filter pleats help minimize dust entrapment and simplify filter cleaning. A shorter pleat wall is less likely to collapse or bend, which can trap dust and prevent its release.

Downflo II Filter

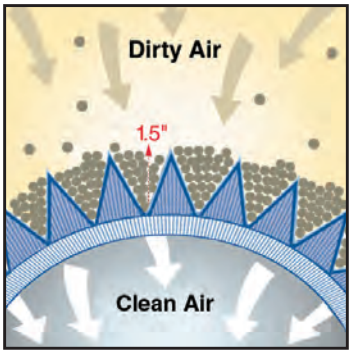

Standard Filter

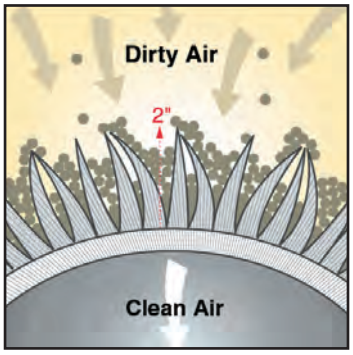

DFT Cartridge Filters DFT dust collectors' patented downward airflow design delivers highest filtration performance while using less energy. The DFT collector, its patented ExtraLife Filter Cleaning System, and Donaldson Torit's filter cartridges together are an unbeatable system. Choose from our superior line of filters to complete the most powerful dust collection solution available.

Downflo® II

Standard Features & Equipment Options

Collector Design	Standard	Optional
Mild Steel Construction	✗	
ExtraLife™ Filter Cleaning System	✗	
Inlets	✗	
Ledge-Free Hopper	✗	
Sprinkler Taps	✗	
Stainless Steel Construction		✗
High Temperature Construction		✗
Direct Drive Fans		✗
Chamber and Exhaust Silencers		✗
Abrasion Resistant (AR) Inlet		✗
Air Management Modules		✗
Extended Dirty Air Plenum		✗
Steep-Sided Hopper		✗
2-Mod Hopper		✗
Explosion Relief Vents		✗
Sprinkler Heads		✗
Service Platform (OSHA compliant)		✗
Damper Pack		✗
Drum Sentry™ Drum-Full Indicator		✗
Lined Clean Air Plenum		✗
Bag-Out Kit (Filter & Discharge)		✗
Bag-In/Bag-Out Kit (Filter & Discharge)		✗
Cartridge Filters		
Ultra-Web® (MERV* 13)	✗	
Ultra-Tek® (MERV 12) Thermo-Tek® (MERV 12) Fibra-Web® (MERV 14) Ultra-Web SB (MERV 15) Torit-Tex™ (MERV 16)		✗
HEPA/ASHRAE Afterfilters		✗

Paint System	Standard	Optional
Prime Coated Interior	✗	
Acrylic urethane finish over alkyd enamel primer. Paint system passes a 350-hr. salt spray test.	✗	
Custom Color		✗
Hostile Environment Coating		✗
Epoxy Coating		✗
Hopper Discharge		
Drum Cover and Hose		✗
Slide Gates		✗
Rotary Valves and Transitions		✗
Screw Conveyors		✗
Electrical Controls, Gauges and Enclosures		
Solid State Timer in NEMA 4 Enclosure	✗	
Magnehelic®** Gauge	✗	
Delta P Control, Delta P Plus Control		✗
Custom Panels		✗
Photohelic®** Gauge Standard & Weatherproof		✗
Basic Cold Climate Kit		✗
Heavy-Duty Cold Climate Kit		✗
Solenoid Enclosure (NEMA 7 & 9)		✗
Warranty		
10-Year Warranty	✗	

* The **Minimum Efficiency Reporting Value** (MERV) of this filter cartridge has been determined through independent laboratory testing using ASHRAE 52.2 (1999) test standards. The MERV rating was determined at a face velocity of 118 feet per minute and loading up to four inches water gauge. Actual efficiency of any filter cartridge will vary according to the specific application parameters. Dust concentration, airflow, particle characteristics, and pulse cleaning methods all affect filtration efficiency.

** Magnehelic and Photohelic are registered trademarks of Dwyer Instruments, Inc.

Information contained in this document is subject to change without notice.

Blue Heaven Technologies

2820 S. English Station Road - Louisville, KY 40299
Tel: (502) 357-0132 Fax (502) 267-8379

Date: 24-Jun-14 **TEST NO.** 14-1144

ASHRAE Standard 52.2-2012 TEST REPORT

Filter Description

Manufacturer	Donaldson Co.
Filter Model	DFO UW
Part Number	P191889
Generic Filter Type	Pleated
Nominal Dimensions (H x W x D)	14 1/4" (11.50") OD x 11" (8") ID x26" L (Oval)
Pocket / Pleat Quantity	Standard
Media Type	Ultra Web
Est. Gross Media Area	Standard
Adhesive Type	N/A

Test Conditions

Loading Dust Type	ASHRAE	Test Air Temp (degrees F.)	76
Barometric Pressure (In. Hg.)	29.41	Relative Humidity (%)	59

Test Results

Airflow Rate (CFM)	**932**
Nominal Face Velocity (fpm)	**N A**
Initial Resistance (in WG)	**0.83**
Final Resistance (in WG)	**4.00**
Dust Fed (gms) to Final Resistance	**851**
E1 (%) Composite Minimum Avg. Efficiency 0.30 - 1.0 um	**90**
E2 (%) Composite Minimum Avg. Efficiency 1.0 - 3.0 um	**99**
E3 (%) Composite Minimum Avg. Efficiency 3.0 - 10.0 um	**100**
Minimum Efficiency Reporting Value (MERV)	**MERV 15 @ 932 CFM**

Comments Tested For: Donaldson Co.

Final Pressure Drop ("w.c.)	4.00"w.c.
Dust Holding Capacity (gms)	851
Average Arrestance (%)	100.0

Test Performed by: JPS Approved By: RWCS Test Completed: 24-Jun-14

Cleaner Air Worldwide

Better Technology

- 550 engineers worldwide
- More than 500 patents
- Broad range of innovative collectors and filters
- 100's of media formulations

Experience & Service

- Technical expertise and support
- Ready-to-ship filters and parts within 24 hours
- 1,000,000+ dust, fume, & mist collectors installed

Global Support

- Facilities in 35 countries
- 37 manufacturing plants and 11 distribution centers
- Sales offices worldwide

Donaldson®
Filtration Solutions

Donaldson Company, Inc.
Industrial Air Filtration
P.O. Box 1299
Minneapolis, MN
55440-1299 U.S.A.

Tel 800.365.1331 (USA)
Tel 800.343.3639 (within Mexico)
dustmktg@mail.donaldson.com
www.donaldsontorit.com

Call Donaldson Torit to get Cleaner Air today 800-365-1331

ISO 9001:2000
FM 61768

Printed in USA

© Donaldson Company, 2003 Downflo II 12-2006

Donaldson® Torit®

ULTRA-WEB® CARTRIDGE

ENGINEERED FOR DUST COLLECTION

- Nanofiber technology ensures longer filter life at a significantly lower pressure drop
- Substrate media features increased rigidity, higher durability, and superior cleanability
- MERV* 15 filtration efficiency rating per ASHRAE 52.2-2007
- Superior particle release due to surface filtration
- Lower pressure drop saves energy
- Longer filter life reduces replacement and maintenance costs
- Lightweight and easy to install
- Flame retardant media available
- Stainless steel construction available

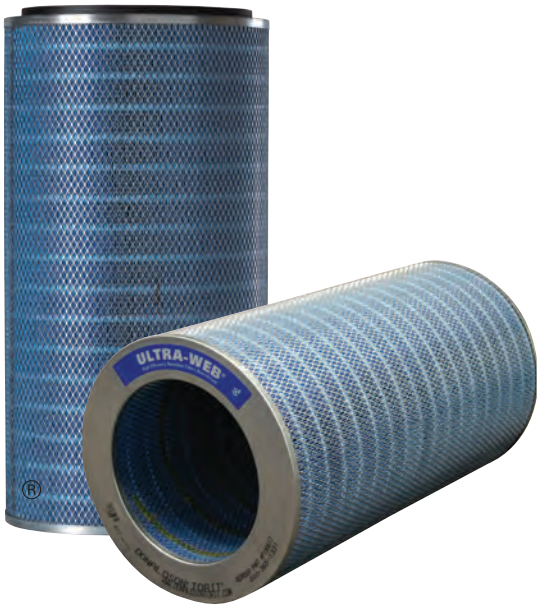

Ultra-Web® Cartridge

THE ULTRA-WEB ADVANTAGE IS CLEANER AIR

Ultra-Web® is proprietary and made with an electrospinning process that produces a very fine, continuous, resilient fiber of 0.2-0.3 micron in diameter to form a permanent web-like net. This nanofiber "web" with its very fine interfiber spaces is constructed onto tough cellulose substrate media, resulting in:

- A more robust media that captures even submicron dust on the surface
- Better pulse cleaning and lower pressure drop
- Cleaner air, longer filter life, and greater cost savings

APPLICATIONS

- Premium performance on extremely fine, dry, and nonfibrous dust
- Durable for more abrasive dust
- Outer liner available for most applications
- Outer liner removed for agglomerative dust applications

* Refer to Minimum Efficiency Reporting Value on page 4.

SEM† IMAGES

1 micron = 1/25,400 of an inch (1/1000 of a millimeter)

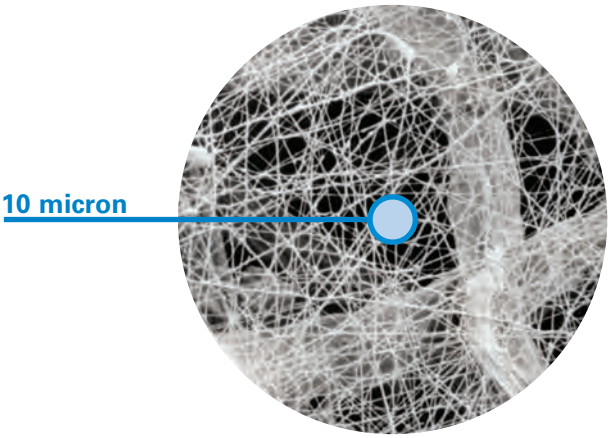

Ultra-Web (600x)
Featuring Nanofiber Technology

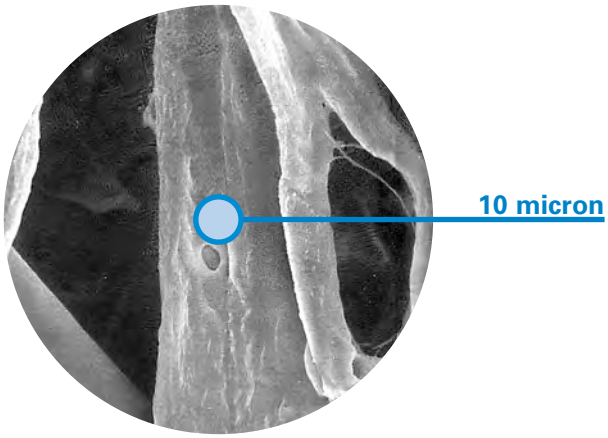

Cellulose Media (600x)

SPECIFICATIONS

MEDIA COMPOSITION	
Nanofiber Technology	Durable proprietary synthetic filter media fibers and polymer Mean fiber diameter of 0.2 µm
Substrate	Proprietary blend of cellulose fibers Flame retardant version per UL® Standard 558, TAPPI Standard T 461om-94, and DIN 53438 Part 3

MEDIA COMPATIBILITY DATA		
Temperature Resistance	180°F / 82°C	
Moisture Absorption*	Maximum 14% @ 70°F (21°C) and 65% RH	
Chemical Tolerance*	Acids→Poor Bases→Fair	Oxidants→Poor Solvents→Fair
Abrasion Resistance	Good per TAPPI 476 (Taber Method)	

CARTRIDGE CONSTRUCTION	
Standard Construction	Galvanized metal end caps Galvanized expanded metal liner 72% open area Urethane gasket
Options	Stainless steel liner and end caps No outer liner version EPDM gasket

MEDIA EFFICIENCY	
U.S. Efficiency Rating	MERV* 15 per ASHRAE 52.2-2007

* Refer to Minimum Efficiency Reporting Value on page 2.
† Scanning Electron Microscope

CONFIGURATIONS

Collector Models	Filter Area		Pleat Height		Dimensions		Ultra-Web				
	ft^2	m^2	in	mm	in	mm	Standard	FR	NL	SS	Beaded
AerBooth	170 226	15.8 21.0	1.5 2.0	38.1 50.8	11.74 x 26 12.74 x 26	298.2 x 660.4 323.6 x 660.4	• •	• •	• •	• •	• •
Ambient Air Tubesheets	226	21.0	2.0	50.8	12.74 x 26	323.6 x 660.4	•	•			
Bin Vent (TBV)	170 226	15.8 21.0	1.5 2.0	38.1 50.8	11.74 x 26 12.74 x 26	298.2 x 660.4 323.6 x 660.4	• •	• •	• •	• •	• •
CF Series	226	21.0	2.0	50.8	12.74 x 26	323.6 x 660.4		•			
CX Series	191 254	17.7 23.6	1.5 2.0	38.1 50.8	12.84 x 26 13.84 x 26	326.1 x 660.4 351.5 x 660.4	• •	• •	• •		• •
Downdraft Bench (DB)	191 254	17.7 23.6	1.5 2.0	38.1 50.8	12.84 x 26 13.84 x 26	326.1 x 660.4 351.5 x 660.4	• •	• •	• •		• •
Torit Downdraft Bench (TDDB)	226	21.0	2.0	50.8	12.74 x 26	323.6 x 660.4		•			
Downflo® (DF)	170 226	15.8 21.0	1.5 2.0	38.1 50.8	11.74 x 26 12.74 x 26	298.2 x 660.4 323.6 x 660.4	• •	• •	• •	• •	• •
Downflo II (DFT)	191 254	17.7 23.6	1.5 2.0	38.1 50.8	12.84 x 26 13.84 x 26	326.1 x 660.4 351.5 x 660.4	• •	• •	• •	• •	• •
Downflo Containment System (DCS)	190	17.7	1.5	38.1	11.4 x 14.4 x 26	289.6 x 365.8 x 660.4	•	•	•	•	
Downflo Oval (DFO)	190	17.7	1.5	38.1	11.4 x 14.4 x 26	289.6 x 365.8 x 660.4	•	•	•	•	
Downflo (SDF)	103	9.6	1.5	38.1	9.2 x 22.3	233.7 x 566.4	•	•			
Downflo WorkStation (DWS)	190	17.7	1.5	38.1	11.4 x 14.4 x 26	289.6 x 365.8 x 660.4	•	•	•	•	
Easy-Trunk™	103	9.6	1.5	38.1	9.2 x 22.3	233.7 x 566.4		•			
Environmental Control Booth™ (ECB)	170 226	15.8 21.0	1.5 2.0	38.1 50.8	11.74 x 26 12.74 x 26	298.2 x 660.4 323.6 x 660.4	• •	• •	• •	• •	• •
Mini-Trunk™	72	6.7	1.5	38.1	9.2 x 16	233.7 x 406.4		•			
MTD	170 226	15.8 21.0	1.5 2.0	38.1 50.8	11.74 x 26 12.74 x 26	298.2 x 660.4 323.6 x 660.4	• •	• •	• •	• •	• •
Porta-Trunk™	220	20.4	2.0	50.8	17.6 x 18	447.0 x 457.2		•			
ProBooth™	170 226	15.8 21.0	1.5 2.0	38.1 50.8	11.74 x 26 12.74 x 26	298.2 x 660.4 323.6 x 660.4	• •	• •	• •	• •	• •
TD Large	170 226	15.8 21.0	1.5 2.0	38.1 50.8	11.74 x 26 12.74 x 26	298.2 x 660.4 323.6 x 660.4	• •	• •	• •	• •	• •
TD Small	45 60	4.2 5.5	1.5 2.0	38.1 50.8	7.9 x 16 7.9 x 16	200.7 x 406.4 200.7 x 406.4	• •	• •	• •	• •	
Trunk 2000 (T-2000)	212	19.7	2.0	50.8	13.84 x 22	351.5 x 558.8		•			
WeldAir	103 220	9.6 20.4	2.0 2.0	50.8 50.8	9.2 x 22.3 17.6 x 18	233.7 x 566.4 447.0 x 457.2		• •			
Weld Bench	254	23.6	2.0	50.8	13.84 x 26	351.5 x 660.4		•			

MINIMUM EFFICIENCY REPORTING (MERV)

The Minimum Efficiency Reporting Value (MERV) of this filter cartridge has been determined through independent laboratory testing using ASHRAE 52.2 (2007) test standards. The MERV rating was determined at a face velocity of 118 feet per minute (36.0 meters per minute) and loading up to four inches (101.6 millimeters) water gauge. Actual efficiency of any filter cartridge will vary according to the specific application parameters. Dust concentration, airflow, particle characteristics, and pulse cleaning methods all affect filtration efficiency.

MOISTURE ABSORPTION

Environmental conditions involving combinations of high temperature, corrosive material, and moisture can reduce media strength. Reduction in media strength may compromise cartridge integrity and performance.

CHEMICAL TOLERANCE

A combination of chemicals may alter fiber resistance to the specified performance level. Chemical attack may compromise cartridge integrity and performance.

Significantly improve the performance of your collector with genuine Donaldson Torit replacement filters and parts. **Call Donaldson Torit today 800-365-1331.**

Donaldson® FILTRATION SOLUTIONS

Tel 800-365-1331 (USA)
Tel 800-343-3639 (within Mexico)

donaldsontorit@donaldson.com
donaldsontorit.com

Donaldson Company, Inc.
Torit
P.O. Box 1299
Minneapolis, MN
55440-1299 U.S.A.

EXACTLY WHAT YOU NEED.™

Ultra-Web Cartridge (04/14)
© 1999 Donaldson Co., Inc. All Rights Reserved. All products, product specifications, and data (airflow, capacity, dimensions, or availability) are subject to change without notice, and may vary by region or country. Donaldson Torit, Ultra-Web, and the color blue are registered trademarks of Donaldson Company, Inc. Contains Donaldson proprietary technology.

Appendix B

Material Composition Data (MSDS)

Material Safety Data Sheet

Akzo Nobel Coatings Inc. encourages and expects you to read and understand this entire MSDS, as there is important information throughout the document. Further, Akzo Nobel Coatings Inc. expects you to follow the precautions identified in this document unless your use conditions would necessitate other appropriate methods or actions.

To promote safe handling, each customer or recipient should: 1) Notify its employees, agents, contractors, and others whom it knows or believes will use this material of the information contained in this MSDS and any other information regarding hazards and safety; 2) Furnish this same information to each of its customers for the product; 3) Request its customers to notify their employees, customers, and other users of the product of this information; and 4) Notify its employees, agents, contractors, and others that the precautions identified for this product and any other products with which mixtures may be created are transferable and cumulative to the mixture.

Section 1. Chemical product and company identification

Manufacturer

Akzo Nobel Coatings Inc.
5555 Spalding Drive
Norcross, GA 30092
USA 1-800-618-1010

Canadian Supplier

Akzo Nobel Coatings Ltd.
110 Woodbine Downs Blvd.
Unit #4 Etobicoke, Ontario
Canada M9W 5S6 1-800-618-1010

IN CASE OF EMERGENCY (HEALTH OR SPILLS):
CHEMTREC (800) 424-9300 (Inside the US)
CHEMTREC International (703) 527-3887 (Outside the US, collect calls accepted)

Product code : 399179

Product name : 99U Black System 3.5

MSDS # : 399179UTE310151250EN61069

Date of issue : 11/15/2012.

Version : 1.07

Date of printing : 11/16/2012.

For the most recent update to this Material Safety Data Sheet, visit our website at http://www.akzonobelcarrefinishes.net
For additional information call the Akzo Nobel Car Refinishes Techline at 1-800-618-1010.

Section 2. Hazards identification

Emergency overview : WARNING!

FLAMMABLE LIQUID AND VAPOR. HARMFUL IF INHALED OR SWALLOWED. CAUSES RESPIRATORY TRACT, EYE AND SKIN IRRITATION. MAY BE HARMFUL IF ABSORBED THROUGH SKIN. CONTAINS MATERIAL THAT MAY CAUSE TARGET ORGAN DAMAGE, BASED ON ANIMAL DATA. POSSIBLE CANCER HAZARD - CONTAINS MATERIAL WHICH MAY CAUSE CANCER, BASED ON ANIMAL DATA. POSSIBLE BIRTH DEFECT HAZARD - CONTAINS MATERIAL WHICH MAY CAUSE BIRTH DEFECTS, BASED ON ANIMAL DATA.

Potential acute health effects

Inhalation : Toxic by inhalation. Irritating to respiratory system.

Ingestion : Toxic if swallowed.

Skin : Harmful in contact with skin. Severely irritating to the skin.

Eyes : Severely irritating to eyes. Risk of serious damage to eyes.

Potential chronic health effects

Chronic effects : Contains material that may cause target organ damage, based on animal data.

Carcinogenicity : Contains material which may cause cancer, based on animal data. Risk of cancer depends on duration and level of exposure.

Section 2. Hazards identification

Mutagenicity : No known significant effects or critical hazards.

Teratogenicity : Contains material which may cause birth defects, based on animal data.

Developmental effects : No known significant effects or critical hazards.

Fertility effects : No known significant effects or critical hazards.

Target organs : Contains material which may cause damage to the following organs: blood, kidneys, lungs, the nervous system, liver, peripheral nervous system, gastrointestinal tract, cardiovascular system, upper respiratory tract, skin, central nervous system (CNS), ears, eye, lens or cornea, nose/sinuses, throat.

Over-exposure signs/symptoms

Inhalation : Adverse symptoms may include the following:
respiratory tract irritation
coughing
reduced fetal weight
increase in fetal deaths
skeletal malformations

Ingestion : Adverse symptoms may include the following:
reduced fetal weight
increase in fetal deaths
skeletal malformations

Skin : Adverse symptoms may include the following:
irritation
redness
reduced fetal weight
increase in fetal deaths
skeletal malformations

Eyes : Adverse symptoms may include the following:
pain or irritation
watering
redness
reduced fetal weight
increase in fetal deaths
skeletal malformations

Medical conditions aggravated by over-exposure : Pre-existing disorders involving any target organs mentioned in this MSDS as being at risk may be aggravated by over-exposure to this product.

NOTICE: Reports have associated repeated and prolonged OVEREXPOSURE to solvents with permanent brain and nervous system damage. Intentional misuse by deliberately concentrating and inhaling the contents of this package may be harmful or fatal.

See toxicological information (Section 11)

Section 3. Composition/information on ingredients

United States

Name	CAS number	%
n-butyl acetate	123-86-4	10 - 25
ethyl 3-ethoxypropionate	763-69-9	5 - 10
4-methylpentan-2-one	108-10-1	1 - 5
acetone	67-64-1	1 - 5
xylene	1330-20-7	1 - 5
2-methoxy-1-methylethyl acetate	108-65-6	1 - 5
carbon black respirable	1333-86-4	1 - 5
isobutyric acid, monoester with 2,2,4-trimethylpentane-1,3-diol	25265-77-4	1 - 5
heptan-2-one	110-43-0	1 - 5
ethylbenzene	100-41-4	1 - 5

Section 3. Composition/information on ingredients

There are no additional ingredients present which, within the current knowledge of the supplier and in the concentrations applicable, are classified as hazardous to health or the environment and hence require reporting in this section.

Section 4. First aid measures

Eye contact : Check for and remove any contact lenses. Immediately flush eyes with plenty of water for at least 15 minutes, occasionally lifting the upper and lower eyelids. Get medical attention immediately.

Skin contact : In case of contact, immediately flush skin with plenty of water for at least 15 minutes while removing contaminated clothing and shoes. Wash clothing before reuse. Clean shoes thoroughly before reuse. Get medical attention immediately.

Inhalation : Move exposed person to fresh air. If not breathing, if breathing is irregular or if respiratory arrest occurs, provide artificial respiration or oxygen by trained personnel. Loosen tight clothing such as a collar, tie, belt or waistband. Get medical attention immediately.

Ingestion : Wash out mouth with water. Do not induce vomiting unless directed to do so by medical personnel. Never give anything by mouth to an unconscious person. Get medical attention immediately.

Protection of first-aiders : No action shall be taken involving any personal risk or without suitable training. If it is suspected that fumes are still present, the rescuer should wear an appropriate mask or self-contained breathing apparatus. It may be dangerous to the person providing aid to give mouth-to-mouth resuscitation. Wash contaminated clothing thoroughly with water before removing it, or wear gloves.

Notes to physician : No specific treatment. Treat symptomatically. Contact poison treatment specialist immediately if large quantities have been ingested or inhaled.

Section 5. Fire-fighting measures

Flammability of the product : Flammable liquid. In a fire or if heated, a pressure increase will occur and the container may burst, with the risk of a subsequent explosion. Runoff to sewer may create fire or explosion hazard.

Extinguishing media

Suitable : Use dry chemical, CO_2, water spray (fog) or foam.

Not suitable : Do not use water jet.

Special exposure hazards : Promptly isolate the scene by removing all persons from the vicinity of the incident if there is a fire. No action shall be taken involving any personal risk or without suitable training. Move containers from fire area if this can be done without risk. Use water spray to keep fire-exposed containers cool.

Hazardous thermal decomposition products : Decomposition products may include the following materials:
carbon dioxide
carbon monoxide

Special protective equipment for fire-fighters : Fire-fighters should wear appropriate protective equipment and self-contained breathing apparatus (SCBA) with a full face-piece operated in positive pressure mode.

Section 6. Accidental release measures

Personal precautions : No action shall be taken involving any personal risk or without suitable training. Evacuate surrounding areas. Keep unnecessary and unprotected personnel from entering. Do not touch or walk through spilled material. Shut off all ignition sources. No flares, smoking or flames in hazard area. Do not breathe vapor or mist. Provide adequate ventilation. Wear appropriate respirator when ventilation is inadequate. Put on appropriate personal protective equipment (see Section 8).

Environmental precautions : Avoid dispersal of spilled material and runoff and contact with soil, waterways, drains and sewers. Inform the relevant authorities if the product has caused environmental pollution (sewers, waterways, soil or air).

Section 6. Accidental release measures

Methods for cleaning up

Small spill : Stop leak if without risk. Move containers from spill area. Dilute with water and mop up if water-soluble. Alternatively, or if water-insoluble, absorb with an inert dry material and place in an appropriate waste disposal container. Use spark-proof tools and explosion-proof equipment. Dispose of via a licensed waste disposal contractor.

Large spill : Stop leak if without risk. Move containers from spill area. Approach release from upwind. Prevent entry into sewers, water courses, basements or confined areas. Wash spillages into an effluent treatment plant or proceed as follows. Contain and collect spillage with non-combustible, absorbent material e.g. sand, earth, vermiculite or diatomaceous earth and place in container for disposal according to local regulations (see section 13). Use spark-proof tools and explosion-proof equipment. Dispose of via a licensed waste disposal contractor. Contaminated absorbent material may pose the same hazard as the spilled product. Note: see section 1 for emergency contact information and section 13 for waste disposal.

Section 7. Handling and storage

Handling : Put on appropriate personal protective equipment (see Section 8). Eating, drinking and smoking should be prohibited in areas where this material is handled, stored and processed. Workers should wash hands and face before eating, drinking and smoking. Remove contaminated clothing and protective equipment before entering eating areas. Avoid exposure during pregnancy. Do not get in eyes or on skin or clothing. Do not breathe vapor or mist. Do not ingest. Use only with adequate ventilation. Wear appropriate respirator when ventilation is inadequate. Do not enter storage areas and confined spaces unless adequately ventilated. Keep in the original container or an approved alternative made from a compatible material, kept tightly closed when not in use. Store and use away from heat, sparks, open flame or any other ignition source. Use explosion-proof electrical (ventilating, lighting and material handling) equipment. Use non-sparking tools. Take precautionary measures against electrostatic discharges. To avoid fire or explosion, dissipate static electricity during transfer by grounding and bonding containers and equipment before transferring material. Empty containers retain product residue and can be hazardous. Do not reuse container.

Storage : Store in accordance with local regulations. Store in a segregated and approved area. Store in original container protected from direct sunlight in a dry, cool and well-ventilated area, away from incompatible materials (see section 10) and food and drink. Eliminate all ignition sources. Separate from oxidizing materials. Keep container tightly closed and sealed until ready for use. Containers that have been opened must be carefully resealed and kept upright to prevent leakage. Do not store in unlabeled containers. Use appropriate containment to avoid environmental contamination.

Section 8. Exposure controls/personal protection

Product name	Exposure limits
United States	
n-butyl acetate	**ACGIH TLV (United States, 3/2012).** STEL: 200 ppm 15 minute(s). TWA: 150 ppm 8 hour(s). **NIOSH REL (United States, 6/2009).** STEL: 950 mg/m³ 15 minute(s). STEL: 200 ppm 15 minute(s). TWA: 710 mg/m³ 10 hour(s). TWA: 150 ppm 10 hour(s). **OSHA PEL (United States, 6/2010).** TWA: 710 mg/m³ 8 hour(s). TWA: 150 ppm 8 hour(s).
4-methylpentan-2-one	**ACGIH TLV (United States, 3/2012).** STEL: 75 ppm 15 minute(s). TWA: 20 ppm 8 hour(s).

Section 8. Exposure controls/personal protection

	NIOSH REL (United States, 6/2009). STEL: 300 mg/m³ 15 minute(s). STEL: 75 ppm 15 minute(s). TWA: 205 mg/m³ 10 hour(s). TWA: 50 ppm 10 hour(s). **OSHA PEL (United States, 6/2010).** TWA: 410 mg/m³ 8 hour(s). TWA: 100 ppm 8 hour(s).
acetone	**ACGIH TLV (United States, 3/2012).** STEL: 1782 mg/m³ 15 minute(s). STEL: 750 ppm 15 minute(s). TWA: 1188 mg/m³ 8 hour(s). TWA: 500 ppm 8 hour(s). **NIOSH REL (United States, 6/2009).** TWA: 590 mg/m³ 10 hour(s). TWA: 250 ppm 10 hour(s). **OSHA PEL (United States, 6/2010).** TWA: 2400 mg/m³ 8 hour(s). TWA: 1000 ppm 8 hour(s).
xylene	**ACGIH TLV (United States, 3/2012).** STEL: 651 mg/m³ 15 minute(s). STEL: 150 ppm 15 minute(s). TWA: 434 mg/m³ 8 hour(s). TWA: 100 ppm 8 hour(s). **OSHA PEL (United States, 6/2010).** TWA: 435 mg/m³ 8 hour(s). TWA: 100 ppm 8 hour(s).
2-methoxy-1-methylethyl acetate	**AIHA WEEL (United States, 10/2011).** TWA: 50 ppm 8 hour(s).
carbon black respirable	**ACGIH TLV (United States, 3/2012).** TWA: 3 mg/m³ 8 hour(s). Form: Inhalable fraction **NIOSH REL (United States, 6/2009).** TWA: 3,5 mg/m³ 10 hour(s). TWA: 0,1 mg of PAHs/cm³ 10 hour(s). **OSHA PEL (United States, 6/2010).** TWA: 3,5 mg/m³ 8 hour(s).
heptan-2-one	**ACGIH TLV (United States, 3/2012).** TWA: 233 mg/m³ 8 hour(s). TWA: 50 ppm 8 hour(s). **NIOSH REL (United States, 6/2009).** TWA: 465 mg/m³ 10 hour(s). TWA: 100 ppm 10 hour(s). **OSHA PEL (United States, 6/2010).** TWA: 465 mg/m³ 8 hour(s). TWA: 100 ppm 8 hour(s).
ethylbenzene	**ACGIH TLV (United States, 3/2012).** TWA: 20 ppm 8 hour(s). **NIOSH REL (United States, 6/2009).** STEL: 545 mg/m³ 15 minute(s). STEL: 125 ppm 15 minute(s). TWA: 435 mg/m³ 10 hour(s). TWA: 100 ppm 10 hour(s). **OSHA PEL (United States, 6/2010).** TWA: 435 mg/m³ 8 hour(s). TWA: 100 ppm 8 hour(s).

Consult local authorities for acceptable exposure limits.

Section 8. Exposure controls/personal protection

Recommended monitoring procedures : If this product contains ingredients with exposure limits, personal, workplace atmosphere or biological monitoring may be required to determine the effectiveness of the ventilation or other control measures and/or the necessity to use respiratory protective equipment.

Engineering measures : Use only with adequate ventilation. Use process enclosures, local exhaust ventilation or other engineering controls to keep worker exposure to airborne contaminants below any recommended or statutory limits. The engineering controls also need to keep gas, vapor or dust concentrations below any lower explosive limits. Use explosion-proof ventilation equipment.

Hygiene measures : Wash hands, forearms and face thoroughly after handling chemical products, before eating, smoking and using the lavatory and at the end of the working period. Appropriate techniques should be used to remove potentially contaminated clothing. Wash contaminated clothing before reusing. Ensure that eyewash stations and safety showers are close to the workstation location.

Dry sanding, flame cutting and/or welding of the dry paint film will give rise to dust and/or hazardous fumes. Wet sanding/flatting should be used wherever possible. If exposure cannot be avoided by the provision of local exhaust ventilation, suitable respiratory protective equipment should be used.

Personal protection

Respiratory : Use a properly fitted, air-purifying or air-fed respirator complying with an approved standard if a risk assessment indicates this is necessary. Respirator selection must be based on known or anticipated exposure levels, the hazards of the product and the safe working limits of the selected respirator.

Hands : Chemical-resistant, impervious gloves complying with an approved standard should be worn at all times when handling chemical products if a risk assessment indicates this is necessary.

Eyes : Safety eyewear complying with an approved standard should be used when a risk assessment indicates this is necessary to avoid exposure to liquid splashes, mists or dusts.

Skin : Personal protective equipment for the body should be selected based on the task being performed and the risks involved and should be approved by a specialist before handling this product.

Environmental exposure controls : Emissions from ventilation or work process equipment should be checked to ensure they comply with the requirements of environmental protection legislation. In some cases, fume scrubbers, filters or engineering modifications to the process equipment will be necessary to reduce emissions to acceptable levels.

Section 9. Physical and chemical properties

Physical state : Liquid.

Flash point : Closed cup: 23,3°C (73,9°F)

Auto-ignition temperature : Not available.

Flammable limits : Not available.

Appearance : Not available.

Odor : Not available.

Odor threshold : Not available.

Specific gravity : 1,004

pH : Not available.

Boiling/condensation point : 56°C (132,8°F)

Melting/freezing point : Not available.

Vapor pressure : Not available.

Vapor density : Heavier than air

Density : 8,38 lbs per gal 1,004 g/cm^3

Weight Volatiles : 43.26% (w/w)

Section 9. Physical and chemical properties

Volume Volatiles : 49 %(v/v)

Weight Solids : 56,74 %(w/w)

Volume Solids : 51,00 %(v/v)

VOC : 3,62 lbs/gal (434 g/l)

Dispersibility properties : Not dispersible in the following materials: cold water.

Section 10. Stability and reactivity

Stability : The product is stable.

Hazardous polymerization : Under normal conditions of storage and use, hazardous polymerization will not occur.

Conditions to avoid : Avoid all possible sources of ignition (spark or flame). Do not pressurize, cut, weld, braze, solder, drill, grind or expose containers to heat or sources of ignition.

Materials to avoid : Reactive or incompatible with the following materials:
oxidizing materials

Hazardous decomposition products : Under normal conditions of storage and use, hazardous decomposition products should not be produced.

Conditions of reactivity : Highly flammable in the presence of the following materials or conditions: open flames, sparks and static discharge.
Flammable in the presence of the following materials or conditions: oxidizing materials.

Section 11. Toxicological information

United States

Acute toxicity

Product/ingredient name	Result	Species	Dose
n-butyl acetate	LD50 Dermal	Rabbit	>17600 mg/kg
	LD50 Oral	Rat	10768 mg/kg
	LC50 Inhalation Vapor	Rat	390 ppm
acetone	LD50 Intravenous	Rat	5500 mg/kg
	LD50 Oral	Rat	5800 mg/kg
	LDLo Dermal	Rabbit	20 mL/kg
	LDLo Intraperitoneal	Rat	500 mg/kg
	TDLo Intraperitoneal	Rat	1452 mg/kg
	TDLo Oral	Rat	5 mL/kg
xylene	LD50 Intraperitoneal	Rat	2459 mg/kg
	LD50 Oral	Rat	4300 mg/kg
	LD50 Subcutaneous	Rat	1700 mg/kg
	TDLo Dermal	Rabbit	4300 mg/kg
ethyl 3-ethoxypropionate	LD50 Dermal	Rabbit	10 mL/kg
	LD50 Oral	Rat	5 g/kg
	LD50 Oral	Rat	3200 mg/kg
2-methoxy-1-methylethyl acetate	LD50 Dermal	Rabbit	>5 g/kg
	LD50 Oral	Rat	9000 mg/kg
	LD50 Oral	Rat	8532 mg/kg
4-methylpentan-2-one	LD Dermal	Rabbit	>3 g/kg
	LD50 Intraperitoneal	Rat	400 mg/kg
	LD50 Oral	Rat	4600 mg/kg
	LD50 Oral	Rat	2080 mg/kg
	TDLo Oral	Rat	500 mg/kg
carbon black respirable	LD50 Oral	Rat	>15400 mg/kg
	TDLo Intratracheal	Rat	16 mg/kg
	TDLo Intratracheal	Rat	15 mg/kg
	TDLo Intratracheal	Rat	10 mg/kg
isobutyric acid, monoester with 2,2,4-trimethylpentane-1,3-diol	LD50 Oral	Rat	3200 mg/kg
heptan-2-one	LD50 Dermal	Rabbit	12600 uL/kg
	LD50 Intraperitoneal	Rat	800 mg/kg

Section 11. Toxicological information

	LD50 Oral	Rat	1670 mg/kg
	LD50 Oral	Rat	1600 mg/kg
ethylbenzene	LD50 Dermal	Rabbit	>5000 mg/kg
	LD50 Dermal	Rabbit	17800 uL/kg
	LD50 Oral	Rat	3500 mg/kg
	TDLo Dermal	Rat	0,08 mL/kg
	TDLo Intraperitoneal	Rat	1062 mg/kg

Conclusion/Summary : Not available.

Chronic toxicity

Conclusion/Summary : Not available.

Irritation/Corrosion

Product/ingredient name	Result	Species	Score	Exposure	Observation
n-butyl acetate	Eyes - Moderate irritant	Rabbit	-	100 milligrams	-
	Skin - Moderate irritant	Rabbit	-	24 hours 500 milligrams	-
acetone	Eyes - Mild irritant	Human	-	186300 parts per million	-
	Eyes - Mild irritant	Rabbit	-	10 microliters	-
	Eyes - Moderate irritant	Rabbit	-	24 hours 20 milligrams	-
	Eyes - Severe irritant	Rabbit	-	20 milligrams	-
	Skin - Mild irritant	Rabbit	-	24 hours 500 milligrams	-
	Skin - Mild irritant	Rabbit	-	395 milligrams	-
xylene	Eyes - Mild irritant	Rabbit	-	87 milligrams	-
	Eyes - Severe irritant	Rabbit	-	24 hours 5 milligrams	-
	Skin - Mild irritant	Rat	-	8 hours 60 microliters	-
	Skin - Moderate irritant	Rabbit	-	24 hours 500 milligrams	-
	Skin - Moderate irritant	Rabbit	-	100 Percent	-
ethyl 3-ethoxypropionate	Skin - Mild irritant	Rabbit	-	24 hours 500 milligrams	-
4-methylpentan-2-one	Eyes - Moderate irritant	Rabbit	-	24 hours 100 microliters	-
	Eyes - Severe irritant	Rabbit	-	40 milligrams	-
	Skin - Mild irritant	Rabbit	-	24 hours 500 milligrams	-
heptan-2-one	Skin - Mild irritant	Rabbit	-	24 hours 14 milligrams	-
ethylbenzene	Eyes - Severe irritant	Rabbit	-	500 milligrams	-
	Skin - Mild irritant	Rabbit	-	24 hours 15 milligrams	-

Conclusion/Summary : Not available.

Sensitizer

Conclusion/Summary : Not available.

Carcinogenicity

Conclusion/Summary : Not available.

Classification

Section 11. Toxicological information

Product/ingredient name	ACGIH	IARC	EPA	NIOSH	NTP	OSHA
n-butyl acetate	A4	-	-	None.	-	-
4-methylpentan-2-one	A3	-	-	None.	-	-
acetone	A4	-	-	None.	-	-
xylene	A4	-	-	None.	-	-
carbon black respirable	A3	2B	-	+	-	-
heptan-2-one	-	-	-	None.	-	-
ethylbenzene	A3	2B	-	None.	-	-

Mutagenicity

Conclusion/Summary : Not available.

Teratogenicity

Conclusion/Summary : Not available.

Reproductive toxicity

Conclusion/Summary : Not available.

Section 12. Ecological information

Environmental effects : No known significant effects or critical hazards.

Aquatic ecotoxicity : Not available.

Biodegradability : Not available.

:

Other adverse effects : No known significant effects or critical hazards.

Ecotoxicological data for one or more components are known and will be made available on request.

Section 13. Disposal considerations

Waste disposal : The generation of waste should be avoided or minimized wherever possible. Significant quantities of waste product residues should not be disposed of via the foul sewer but processed in a suitable effluent treatment plant. Dispose of surplus and non-recyclable products via a licensed waste disposal contractor. Disposal of this product, solutions and any by-products should at all times comply with the requirements of environmental protection and waste disposal legislation and any regional local authority requirements. Waste packaging should be recycled. Incineration or landfill should only be considered when recycling is not feasible. This material and its container must be disposed of in a safe way. Care should be taken when handling emptied containers that have not been cleaned or rinsed out. Empty containers or liners may retain some product residues. Vapor from product residues may create a highly flammable or explosive atmosphere inside the container. Do not cut, weld or grind used containers unless they have been cleaned thoroughly internally. Avoid dispersal of spilled material and runoff and contact with soil, waterways, drains and sewers.

Disposal should be in accordance with applicable regional, national and local laws and regulations.

Refer to Section 7: HANDLING AND STORAGE and Section 8: EXPOSURE CONTROLS/PERSONAL PROTECTION for additional handling information and protection of employees.

Section 14. Transport information

Consult your shipping specialist or supplier for appropriate assignment of the DOT information.

Section 15. Regulatory information

United States

OSHA/HCS status : This material is considered hazardous by the OSHA Hazard Communication Standard (29 CFR 1910.1200).

United States inventory (TSCA 8b) : All components are listed or exempted.

SARA 313

Form R - Reporting requirements :

Product name	CAS number	Concentration
4-methylpentan-2-one	108-10-1	4.89
xylene	1330-20-7	4.57
ethylbenzene	100-41-4	1.07

California Prop. 65 : WARNING: This product contains chemicals known to the State of California to cause cancer and birth defects or other reproductive harm.

Canada

WHMIS (Canada) : Class B-2: Flammable liquid
Class D-1B: Material causing immediate and serious toxic effects (Toxic).
Class D-2A: Material causing other toxic effects (Very toxic).
Class D-2B: Material causing other toxic effects (Toxic).

Canada inventory : All components are listed or exempted.

EU regulations

Hazard symbol or symbols : Not available.

Risk phrases
R10- Flammable.
R66- Repeated exposure may cause skin dryness or cracking.
R67- Vapors may cause drowsiness and dizziness.
R52/53- Harmful to aquatic organisms, may cause long-term adverse effects in the aquatic environment.

Safety phrases : S23- Do not breathe vapor or spray.
S38- In case of insufficient ventilation, wear suitable respiratory equipment.

International regulations

International lists : **Australia inventory (AICS)**: At least one component is not listed.
China inventory (IECSC): At least one component is not listed.
Japan inventory: At least one component is not listed.
Korea inventory: At least one component is not listed.
New Zealand Inventory of Chemicals (NZIoC): At least one component is not listed.
Philippines inventory (PICCS): At least one component is not listed.

Section 16. Other information

Notice to reader

To the best of our knowledge, the information contained herein is accurate. However, neither the above-named supplier, nor any of its subsidiaries, assumes any liability whatsoever for the accuracy or completeness of the information contained herein.
Final determination of suitability of any material is the sole responsibility of the user. All materials may present unknown hazards and should be used with caution. Although certain hazards are described herein, we cannot guarantee that these are the only hazards that exist.

Material Safety Data Sheet

Akzo Nobel Coatings Inc. encourages and expects you to read and understand this entire MSDS, as there is important information throughout the document. Further, Akzo Nobel Coatings Inc. expects you to follow the precautions identified in this document unless your use conditions would necessitate other appropriate methods or actions.

To promote safe handling, each customer or recipient should: 1) Notify its employees, agents, contractors, and others whom it knows or believes will use this material of the information contained in this MSDS and any other information regarding hazards and safety; 2) Furnish this same information to each of its customers for the product; 3) Request its customers to notify their employees, customers, and other users of the product of this information; and 4) Notify its employees, agents, contractors, and others that the precautions identified for this product and any other products with which mixtures may be created are transferable and cumulative to the mixture.

Section 1. Chemical product and company identification

Manufacturer

Akzo Nobel Coatings Inc.
5555 Spalding Drive
Norcross, GA 30092
USA 1-800-618-1010

Canadian Supplier

Akzo Nobel Coatings Ltd.
110 Woodbine Downs Blvd.
Unit #4 Etobicoke, Ontario
Canada M9W 5S6 1-800-618-1010

IN CASE OF EMERGENCY (HEALTH OR SPILLS):
CHEMTREC (800) 424-9300 (Inside the US)
CHEMTREC International (703) 527-3887 (Outside the US, collect calls accepted)

Product code : 483670

Product name : 998 ACCELERATOR

MSDS # : 483670UTE800164310EN63197

Date of issue : 6/11/2012.

Version : 1.01

Date of printing : 8/31/2012.

For the most recent update to this Material Safety Data Sheet, visit our website at http://www.akzonobelcarrefinishes.net
For additional information call the Akzo Nobel Car Refinishes Techline at 1-800-618-1010.

Section 2. Hazards identification

Emergency overview : WARNING!

FLAMMABLE LIQUID AND VAPOR. HARMFUL IF INHALED OR SWALLOWED. CAUSES RESPIRATORY TRACT, EYE AND SKIN IRRITATION. MAY BE HARMFUL IF ABSORBED THROUGH SKIN. CONTAINS MATERIAL THAT MAY CAUSE TARGET ORGAN DAMAGE, BASED ON ANIMAL DATA. POSSIBLE BIRTH DEFECT HAZARD - CONTAINS MATERIAL WHICH MAY CAUSE BIRTH DEFECTS, BASED ON ANIMAL DATA.

Potential acute health effects

Inhalation : Toxic by inhalation. Irritating to respiratory system. Exposure to decomposition products may cause a health hazard. Serious effects may be delayed following exposure.

Ingestion : Toxic if swallowed.

Skin : Harmful in contact with skin. Severely irritating to the skin.

Eyes : Severely irritating to eyes. Risk of serious damage to eyes.

Potential chronic health effects

Chronic effects : Contains material that may cause target organ damage, based on animal data.

Carcinogenicity : No known significant effects or critical hazards.

Section 2. Hazards identification

Mutagenicity : No known significant effects or critical hazards.

Teratogenicity : Contains material which may cause birth defects, based on animal data.

Developmental effects : No known significant effects or critical hazards.

Fertility effects : No known significant effects or critical hazards.

Target organs : Contains material which may cause damage to the following organs: blood, kidneys, lungs, liver, bladder, upper respiratory tract, skin, central nervous system (CNS), eye, lens or cornea.

Over-exposure signs/symptoms

Inhalation : Adverse symptoms may include the following:
respiratory tract irritation
coughing
reduced fetal weight
increase in fetal deaths
skeletal malformations

Ingestion : Adverse symptoms may include the following:
reduced fetal weight
increase in fetal deaths
skeletal malformations

Skin : Adverse symptoms may include the following:
irritation
redness
reduced fetal weight
increase in fetal deaths
skeletal malformations

Eyes : Adverse symptoms may include the following:
pain or irritation
watering
redness
reduced fetal weight
increase in fetal deaths
skeletal malformations

Medical conditions aggravated by over-exposure : Pre-existing disorders involving any target organs mentioned in this MSDS as being at risk may be aggravated by over-exposure to this product.

NOTICE: Reports have associated repeated and prolonged OVEREXPOSURE to solvents with permanent brain and nervous system damage. Intentional misuse by deliberately concentrating and inhaling the contents of this package may be harmful or fatal.

See toxicological information (Section 11)

Section 3. Composition/information on ingredients

United States

Name	CAS number	%
5-methylhexan-2-one	110-12-3	25 - 35
4-chloro-α,α,α-trifluorotoluene	98-56-6	10 - 25
acetone	67-64-1	10 - 25
dibutyltin dilaurate	77-58-7	10 - 25
n-butyl acetate	123-86-4	1 - 5

There are no additional ingredients present which, within the current knowledge of the supplier and in the concentrations applicable, are classified as hazardous to health or the environment and hence require reporting in this section.

Section 4. First aid measures

Eye contact : Check for and remove any contact lenses. Immediately flush eyes with plenty of water for at least 15 minutes, occasionally lifting the upper and lower eyelids. Get medical attention immediately.

Skin contact : In case of contact, immediately flush skin with plenty of water for at least 15 minutes while removing contaminated clothing and shoes. Wash clothing before reuse. Clean shoes thoroughly before reuse. Get medical attention immediately.

Inhalation : Move exposed person to fresh air. If not breathing, if breathing is irregular or if respiratory arrest occurs, provide artificial respiration or oxygen by trained personnel. Loosen tight clothing such as a collar, tie, belt or waistband. Get medical attention immediately.

Ingestion : Wash out mouth with water. Do not induce vomiting unless directed to do so by medical personnel. Never give anything by mouth to an unconscious person. Get medical attention immediately.

Protection of first-aiders : No action shall be taken involving any personal risk or without suitable training. If it is suspected that fumes are still present, the rescuer should wear an appropriate mask or self-contained breathing apparatus. It may be dangerous to the person providing aid to give mouth-to-mouth resuscitation. Wash contaminated clothing thoroughly with water before removing it, or wear gloves.

Notes to physician : No specific treatment. Treat symptomatically. Contact poison treatment specialist immediately if large quantities have been ingested or inhaled.

Section 5. Fire-fighting measures

Flammability of the product : Flammable liquid. In a fire or if heated, a pressure increase will occur and the container may burst, with the risk of a subsequent explosion. Runoff to sewer may create fire or explosion hazard.

Extinguishing media

Suitable : Use dry chemical, CO_2, water spray (fog) or foam.

Not suitable : Do not use water jet.

Special exposure hazards : Promptly isolate the scene by removing all persons from the vicinity of the incident if there is a fire. No action shall be taken involving any personal risk or without suitable training. Move containers from fire area if this can be done without risk. Use water spray to keep fire-exposed containers cool. Fire water contaminated with this material must be contained and prevented from being discharged to any waterway, sewer or drain.

Hazardous thermal decomposition products : Decomposition products may include the following materials:
carbon dioxide
carbon monoxide
halogenated compounds
carbonyl halides
metal oxide/oxides

Special protective equipment for fire-fighters : Fire-fighters should wear appropriate protective equipment and self-contained breathing apparatus (SCBA) with a full face-piece operated in positive pressure mode.

Section 6. Accidental release measures

Personal precautions : No action shall be taken involving any personal risk or without suitable training. Evacuate surrounding areas. Keep unnecessary and unprotected personnel from entering. Do not touch or walk through spilled material. Shut off all ignition sources. No flares, smoking or flames in hazard area. Do not breathe vapor or mist. Provide adequate ventilation. Wear appropriate respirator when ventilation is inadequate. Put on appropriate personal protective equipment (see Section 8).

Section 6. Accidental release measures

Environmental precautions : Avoid dispersal of spilled material and runoff and contact with soil, waterways, drains and sewers. Inform the relevant authorities if the product has caused environmental pollution (sewers, waterways, soil or air). Water polluting material. May be harmful to the environment if released in large quantities.

Methods for cleaning up

Small spill : Stop leak if without risk. Move containers from spill area. Dilute with water and mop up if water-soluble. Alternatively, or if water-insoluble, absorb with an inert dry material and place in an appropriate waste disposal container. Use spark-proof tools and explosion-proof equipment. Dispose of via a licensed waste disposal contractor.

Large spill : Stop leak if without risk. Move containers from spill area. Approach release from upwind. Prevent entry into sewers, water courses, basements or confined areas. Wash spillages into an effluent treatment plant or proceed as follows. Contain and collect spillage with non-combustible, absorbent material e.g. sand, earth, vermiculite or diatomaceous earth and place in container for disposal according to local regulations (see section 13). Use spark-proof tools and explosion-proof equipment. Dispose of via a licensed waste disposal contractor. Contaminated absorbent material may pose the same hazard as the spilled product. Note: see section 1 for emergency contact information and section 13 for waste disposal.

Section 7. Handling and storage

Handling : Put on appropriate personal protective equipment (see Section 8). Eating, drinking and smoking should be prohibited in areas where this material is handled, stored and processed. Workers should wash hands and face before eating, drinking and smoking. Remove contaminated clothing and protective equipment before entering eating areas. Avoid exposure during pregnancy. Do not get in eyes or on skin or clothing. Do not breathe vapor or mist. Do not ingest. Avoid release to the environment. Use only with adequate ventilation. Wear appropriate respirator when ventilation is inadequate. Do not enter storage areas and confined spaces unless adequately ventilated. Keep in the original container or an approved alternative made from a compatible material, kept tightly closed when not in use. Store and use away from heat, sparks, open flame or any other ignition source. Use explosion-proof electrical (ventilating, lighting and material handling) equipment. Use non-sparking tools. Take precautionary measures against electrostatic discharges. To avoid fire or explosion, dissipate static electricity during transfer by grounding and bonding containers and equipment before transferring material. Empty containers retain product residue and can be hazardous. Do not reuse container.

Storage : Store in accordance with local regulations. Store in a segregated and approved area. Store in original container protected from direct sunlight in a dry, cool and well-ventilated area, away from incompatible materials (see section 10) and food and drink. Eliminate all ignition sources. Separate from oxidizing materials. Keep container tightly closed and sealed until ready for use. Containers that have been opened must be carefully resealed and kept upright to prevent leakage. Do not store in unlabeled containers. Use appropriate containment to avoid environmental contamination.

Section 8. Exposure controls/personal protection

Product name	Exposure limits
United States	
5-methylhexan-2-one	**ACGIH TLV (United States, 2/2010).** TWA: 234 mg/m³ 8 hour(s). TWA: 50 ppm 8 hour(s). **NIOSH REL (United States, 6/2009).** TWA: 240 mg/m³ 10 hour(s). TWA: 50 ppm 10 hour(s). **OSHA PEL (United States, 6/2010).** TWA: 475 mg/m³ 8 hour(s). TWA: 100 ppm 8 hour(s).

Section 8. Exposure controls/personal protection

acetone	**ACGIH TLV (United States, 2/2010).** STEL: 1782 mg/m³ 15 minute(s). STEL: 750 ppm 15 minute(s). TWA: 1188 mg/m³ 8 hour(s). TWA: 500 ppm 8 hour(s). **NIOSH REL (United States, 6/2009).** TWA: 590 mg/m³ 10 hour(s). TWA: 250 ppm 10 hour(s). **OSHA PEL (United States, 6/2010).** TWA: 2400 mg/m³ 8 hour(s). TWA: 1000 ppm 8 hour(s).
dibutyltin dilaurate	**ACGIH TLV (United States, 2/2010). Absorbed through skin.** STEL: 0,2 mg/m³, (as Sn) 15 minute(s). TWA: 0,1 mg/m³, (as Sn) 8 hour(s). **NIOSH REL (United States, 6/2009). Absorbed through skin.** TWA: 0,1 mg/m³, (as Sn) 10 hour(s). **OSHA PEL (United States, 6/2010).** TWA: 0,1 mg/m³, (as Sn) 8 hour(s).
n-butyl acetate	**ACGIH TLV (United States, 2/2010).** STEL: 200 ppm 15 minute(s). TWA: 150 ppm 8 hour(s). **NIOSH REL (United States, 6/2009).** STEL: 950 mg/m³ 15 minute(s). STEL: 200 ppm 15 minute(s). TWA: 710 mg/m³ 10 hour(s). TWA: 150 ppm 10 hour(s). **OSHA PEL (United States, 6/2010).** TWA: 710 mg/m³ 8 hour(s). TWA: 150 ppm 8 hour(s).

Consult local authorities for acceptable exposure limits.

Recommended monitoring procedures : If this product contains ingredients with exposure limits, personal, workplace atmosphere or biological monitoring may be required to determine the effectiveness of the ventilation or other control measures and/or the necessity to use respiratory protective equipment.

Engineering measures : Use only with adequate ventilation. Use process enclosures, local exhaust ventilation or other engineering controls to keep worker exposure to airborne contaminants below any recommended or statutory limits. The engineering controls also need to keep gas, vapor or dust concentrations below any lower explosive limits. Use explosion-proof ventilation equipment.

Hygiene measures : Wash hands, forearms and face thoroughly after handling chemical products, before eating, smoking and using the lavatory and at the end of the working period. Appropriate techniques should be used to remove potentially contaminated clothing. Wash contaminated clothing before reusing. Ensure that eyewash stations and safety showers are close to the workstation location.

Dry sanding, flame cutting and/or welding of the dry paint film will give rise to dust and/or hazardous fumes. Wet sanding/flatting should be used wherever possible. If exposure cannot be avoided by the provision of local exhaust ventilation, suitable respiratory protective equipment should be used.

Personal protection

Respiratory : Use a properly fitted, air-purifying or air-fed respirator complying with an approved standard if a risk assessment indicates this is necessary. Respirator selection must be based on known or anticipated exposure levels, the hazards of the product and the safe working limits of the selected respirator.

Hands : Chemical-resistant, impervious gloves complying with an approved standard should be worn at all times when handling chemical products if a risk assessment indicates this is necessary.

Section 8. Exposure controls/personal protection

Eyes : Safety eyewear complying with an approved standard should be used when a risk assessment indicates this is necessary to avoid exposure to liquid splashes, mists or dusts.

Skin : Personal protective equipment for the body should be selected based on the task being performed and the risks involved and should be approved by a specialist before handling this product.

Environmental exposure controls : Emissions from ventilation or work process equipment should be checked to ensure they comply with the requirements of environmental protection legislation. In some cases, fume scrubbers, filters or engineering modifications to the process equipment will be necessary to reduce emissions to acceptable levels.

Section 9. Physical and chemical properties

Physical state : Liquid.

Flash point : Closed cup: 2,2°C (36°F)

Auto-ignition temperature : Not available.

Flammable limits : Not available.

Appearance : Not available.

Odor : Not available.

Odor threshold : Not available.

Specific gravity : 0,958

pH : Not available.

Boiling/condensation point : 56°C (132,8°F)

Melting/freezing point : Not available.

Vapor pressure : Not available.

Vapor density : Heavier than air

Density : 7.99 lbs per gal 0.958 g/cm^3

Weight Volatiles : 69.41% (w/w)

Volume Volatiles : 73.89 %(v/v)

Weight Solids : 30.59 %(w/w)

Volume Solids : 26.11 %(v/v)

VOC : 4.19 lbs/gal (502 g/l)

Dispersibility properties : Not dispersible in the following materials: cold water.

Section 10. Stability and reactivity

Stability : The product is stable.

Hazardous polymerization : Under normal conditions of storage and use, hazardous polymerization will not occur.

Conditions to avoid : Avoid all possible sources of ignition (spark or flame). Do not pressurize, cut, weld, braze, solder, drill, grind or expose containers to heat or sources of ignition.

Materials to avoid : Reactive or incompatible with the following materials:
oxidizing materials

Hazardous decomposition products : Under normal conditions of storage and use, hazardous decomposition products should not be produced.

Conditions of reactivity : Highly flammable in the presence of the following materials or conditions: open flames, sparks and static discharge.
Flammable in the presence of the following materials or conditions: oxidizing materials.

Section 11. Toxicological information

United States

Acute toxicity

Product/ingredient name	Result	Species	Dose
5-methylhexan-2-one	LD50 Dermal	Rabbit	10 mL/kg
	LD50 Oral	Rat	5657 mg/kg
	LD50 Oral	Rat	3200 mg/kg
	LDLo Intraperitoneal	Rat	400 mg/kg
4-chloro-α,α,α-trifluorotoluene	LD50 Dermal	Rabbit	>2700 mg/kg
	LD50 Dermal	Rabbit	>2700 mg/kg
	LD50 Oral	Rat	13 g/kg
	LD50 Oral	Rat	>6800 mg/kg
	LD50 Oral	Rat	>6800 mg/kg
	LC50 Inhalation Vapor	Rat	22000 mg/m³
	LC50 Inhalation Vapor	Rat	22000 mg/m³
acetone	LD50 Intravenous	Rat	5500 mg/kg
	LD50 Oral	Rat	5800 mg/kg
	LDLo Dermal	Rabbit	20 mL/kg
	LDLo Intraperitoneal	Rat	500 mg/kg
	TDLo Intraperitoneal	Rat	1452 mg/kg
	TDLo Oral	Rat	5 mL/kg
dibutyltin dilaurate	LD Dermal	Rabbit	>2 g/kg
	LD50 Intravenous	Rat	33 mg/kg
	LD50 Oral	Rat	175 mg/kg
	LDLo Intraperitoneal	Rat	85 mg/kg
n-butyl acetate	LD50 Dermal	Rabbit	>17600 mg/kg
	LD50 Oral	Rat	10768 mg/kg
	LC50 Inhalation Vapor	Rat	390 ppm

Conclusion/Summary : Not available.

Chronic toxicity

Conclusion/Summary : Not available.

Irritation/Corrosion

Product/ingredient name	Result	Species	Score	Exposure	Observation
5-methylhexan-2-one	Eyes - Mild irritant	Rabbit	-	24 hours 100 microliters	-
acetone	Eyes - Mild irritant	Human	-	186300 parts per million	-
	Eyes - Mild irritant	Rabbit	-	10 microliters	-
	Eyes - Moderate irritant	Rabbit	-	24 hours 20 milligrams	-
	Eyes - Severe irritant	Rabbit	-	20 milligrams	-
	Skin - Mild irritant	Rabbit	-	24 hours 500 milligrams	-
	Skin - Mild irritant	Rabbit	-	395 milligrams	-
dibutyltin dilaurate	Eyes - Moderate irritant	Rabbit	-	24 hours 100 milligrams	-
	Skin - Severe irritant	Rabbit	-	500 milligrams	-
n-butyl acetate	Eyes - Moderate irritant	Rabbit	-	100 milligrams	-
	Skin - Moderate irritant	Rabbit	-	24 hours 500 milligrams	-

Conclusion/Summary : Not available.

Sensitizer

Conclusion/Summary : Not available.

Carcinogenicity

Section 11. Toxicological information

Conclusion/Summary : Not available.

Classification

Product/ingredient name	ACGIH	IARC	EPA	NIOSH	NTP	OSHA
5-methylhexan-2-one	-	-	-	None.	-	-
acetone	A4	-	-	None.	-	-
dibutyltin dilaurate	A4	-	-	-	-	-
n-butyl acetate	A4	-	-	None.	-	-

Mutagenicity

Conclusion/Summary : Not available.

Teratogenicity

Conclusion/Summary : Not available.

Reproductive toxicity

Conclusion/Summary : Not available.

Section 12. Ecological information

Environmental effects : Water polluting material. May be harmful to the environment if released in large quantities.

Aquatic ecotoxicity : Not available.

Biodegradability : Not available.

:

Other adverse effects : No known significant effects or critical hazards.

Ecotoxicological data for one or more components are known and will be made available on request.

Section 13. Disposal considerations

Waste disposal : The generation of waste should be avoided or minimized wherever possible. Significant quantities of waste product residues should not be disposed of via the foul sewer but processed in a suitable effluent treatment plant. Dispose of surplus and non-recyclable products via a licensed waste disposal contractor. Disposal of this product, solutions and any by-products should at all times comply with the requirements of environmental protection and waste disposal legislation and any regional local authority requirements. Waste packaging should be recycled. Incineration or landfill should only be considered when recycling is not feasible. This material and its container must be disposed of in a safe way. Care should be taken when handling emptied containers that have not been cleaned or rinsed out. Empty containers or liners may retain some product residues. Vapor from product residues may create a highly flammable or explosive atmosphere inside the container. Do not cut, weld or grind used containers unless they have been cleaned thoroughly internally. Avoid dispersal of spilled material and runoff and contact with soil, waterways, drains and sewers.

Disposal should be in accordance with applicable regional, national and local laws and regulations.

Refer to Section 7: HANDLING AND STORAGE and Section 8: EXPOSURE CONTROLS/PERSONAL PROTECTION for additional handling information and protection of employees.

Section 14. Transport information

Consult your shipping specialist or supplier for appropriate assignment of the DOT information.

Section 15. Regulatory information

United States

OSHA/HCS status : This material is considered hazardous by the OSHA Hazard Communication Standard (29 CFR 1910.1200).

United States inventory (TSCA 8b) : All components are listed or exempted.

California Prop. 65 No products were found.

Canada

WHMIS (Canada) : Class B-2: Flammable liquid
Class D-1A: Material causing immediate and serious toxic effects (Very toxic).
Class D-2B: Material causing other toxic effects (Toxic).

Canada inventory : At least one component is not listed in DSL but all such components are listed in NDSL.

EU regulations

Hazard symbol or symbols :

Hazard symbol or symbols : Not available.

Risk phrases
R11- Highly flammable.
R68- Possible risk of irreversible effects.
R60- May impair fertility.
R61- May cause harm to the unborn child.
R48/25- Also toxic: danger of serious damage to health by prolonged exposure if swallowed.
R20- Also harmful by inhalation.
R34- Causes burns.
R43- May cause sensitization by skin contact.
R51/53- Toxic to aquatic organisms, may cause long-term adverse effects in the aquatic environment.

Safety phrases : S53- Avoid exposure - obtain special instructions before use.
S23- Do not breathe vapor or spray.
S26- In case of contact with eyes, rinse immediately with plenty of water and seek medical advice.
S36/37/39- Wear suitable protective clothing, gloves and eye/face protection.
S45- In case of accident or if you feel unwell, seek medical advice immediately (show the label where possible).
S61- Avoid release to the environment. Refer to special instructions/safety data sheet.

International regulations

International lists : **Australia inventory (AICS)**: At least one component is not listed.
China inventory (IECSC): At least one component is not listed.
Japan inventory: At least one component is not listed.
Korea inventory: At least one component is not listed.
New Zealand Inventory of Chemicals (NZIoC): At least one component is not listed.
Philippines inventory (PICCS): At least one component is not listed.

Section 16. Other information

Notice to reader

To the best of our knowledge, the information contained herein is accurate. However, neither the above-named supplier, nor any of its subsidiaries, assumes any liability whatsoever for the accuracy or completeness of the information contained herein.
Final determination of suitability of any material is the sole responsibility of the user. All materials may present unknown hazards and should be used with caution. Although certain hazards are described herein, we cannot guarantee that these are the only hazards that exist.

Material Safety Data Sheet

Akzo Nobel Coatings Inc. encourages and expects you to read and understand this entire MSDS, as there is important information throughout the document. Further, Akzo Nobel Coatings Inc. expects you to follow the precautions identified in this document unless your use conditions would necessitate other appropriate methods or actions.

To promote safe handling, each customer or recipient should: 1) Notify its employees, agents, contractors, and others whom it knows or believes will use this material of the information contained in this MSDS and any other information regarding hazards and safety; 2) Furnish this same information to each of its customers for the product; 3) Request its customers to notify their employees, customers, and other users of the product of this information; and 4) Notify its employees, agents, contractors, and others that the precautions identified for this product and any other products with which mixtures may be created are transferable and cumulative to the mixture.

Section 1. Chemical product and company identification

Manufacturer

Akzo Nobel Coatings Inc.
5555 Spalding Drive
Norcross, GA 30092
USA 1-800-618-1010

Canadian Supplier

Akzo Nobel Coatings Ltd.
110 Woodbine Downs Blvd.
Unit #4 Etobicoke, Ontario
Canada M9W 5S6 1-800-618-1010

IN CASE OF EMERGENCY (HEALTH OR SPILLS):
CHEMTREC (800) 424-9300 (Inside the US)
CHEMTREC International (703) 527-3887 (Outside the US, collect calls accepted)

Product code : 397426

Product name : Autocoat BT LV260 Hardener EP

MSDS # : 397426C01610764220EN64060

Date of issue : 14-10-2011.

Version : 3.12

Date of printing : 22-10-2011.

For the most recent update to this Material Safety Data Sheet, visit our website at http://www.akzonobelcarrefinishes.net
For additional information call the Akzo Nobel Car Refinishes Techline at 1-800-618-1010.

Section 2. Hazards identification

Emergency overview : DANGER!

FLAMMABLE LIQUID AND VAPOR. MAY BE FATAL IF SWALLOWED. CAUSES RESPIRATORY TRACT, EYE AND SKIN BURNS. MAY BE HARMFUL IF ABSORBED THROUGH SKIN. CONTAINS MATERIAL THAT CAN CAUSE TARGET ORGAN DAMAGE.

Potential acute health effects

Inhalation : Corrosive to the respiratory system. Exposure to decomposition products may cause a health hazard. Serious effects may be delayed following exposure.

Ingestion : Very toxic if swallowed. May cause burns to mouth, throat and stomach.

Skin : Corrosive to the skin. Causes burns. Harmful in contact with skin.

Eyes : Corrosive to eyes. Causes burns.

Potential chronic health effects

Chronic effects : Contains material that can cause target organ damage.

Carcinogenicity : No known significant effects or critical hazards.

Mutagenicity : No known significant effects or critical hazards.

Teratogenicity : No known significant effects or critical hazards.

Section 2. Hazards identification

Developmental effects : No known significant effects or critical hazards.

Fertility effects : No known significant effects or critical hazards.

Target organs : Contains material which causes damage to the following organs: eye, lens or cornea. Contains material which may cause damage to the following organs: blood, kidneys, liver, mucous membranes, peripheral nervous system, gastrointestinal tract, upper respiratory tract, skin, central nervous system (CNS), nose/sinuses, throat.

Over-exposure signs/symptoms

Inhalation : Adverse symptoms may include the following:
respiratory tract irritation
coughing

Ingestion : Adverse symptoms may include the following:
stomach pains

Skin : Adverse symptoms may include the following:
pain or irritation
redness
blistering may occur

Eyes : Adverse symptoms may include the following:
pain
watering
redness

Medical conditions aggravated by over-exposure : Pre-existing disorders involving any target organs mentioned in this MSDS as being at risk may be aggravated by over-exposure to this product.

NOTICE: Reports have associated repeated and prolonged OVEREXPOSURE to solvents with permanent brain and nervous system damage. Intentional misuse by deliberately concentrating and inhaling the contents of this package may be harmful or fatal.

See toxicological information (Section 11)

Section 3. Composition/information on ingredients

United States

Name	CAS number	%
4-chloro-α,α,α-trifluorotoluene	98-56-6	10 - 25
n-butanol	71-36-3	10 - 25
Methyl amyl ketone	110-43-0	10 - 25
xylene	1330-20-7	5 - 10
Isopropanol	67-63-0	5 - 10
1,2,4-trimethylbenzene	95-63-6	5 - 10
m-phenylenebis(methylamine)	1477-55-0	1 - 5
mesitylene	108-67-8	1 - 5

There are no additional ingredients present which, within the current knowledge of the supplier and in the concentrations applicable, are classified as hazardous to health or the environment and hence require reporting in this section.

Section 4. First aid measures

Eye contact : Check for and remove any contact lenses. Immediately flush eyes with plenty of water for at least 15 minutes, occasionally lifting the upper and lower eyelids. Get medical attention immediately.

Skin contact : In case of contact, immediately flush skin with plenty of water for at least 15 minutes while removing contaminated clothing and shoes. Wash clothing before reuse. Clean shoes thoroughly before reuse. Get medical attention immediately.

Inhalation : Move exposed person to fresh air. If not breathing, if breathing is irregular or if respiratory arrest occurs, provide artificial respiration or oxygen by trained personnel. Loosen tight clothing such as a collar, tie, belt or waistband. Get medical attention immediately.

Section 4. First aid measures

Ingestion : Call medical doctor or poison control center immediately. Wash out mouth with water. Do not induce vomiting unless directed to do so by medical personnel. Never give anything by mouth to an unconscious person. Get medical attention immediately.

Protection of first-aiders : No action shall be taken involving any personal risk or without suitable training. If it is suspected that fumes are still present, the rescuer should wear an appropriate mask or self-contained breathing apparatus. It may be dangerous to the person providing aid to give mouth-to-mouth resuscitation. Wash contaminated clothing thoroughly with water before removing it, or wear gloves.

Notes to physician : In case of inhalation of decomposition products in a fire, symptoms may be delayed. The exposed person may need to be kept under medical surveillance for 48 hours.

Section 5. Fire-fighting measures

Flammability of the product : Flammable liquid. In a fire or if heated, a pressure increase will occur and the container may burst, with the risk of a subsequent explosion. Runoff to sewer may create fire or explosion hazard.

Extinguishing media

Suitable : Use dry chemical, CO_2, water spray (fog) or foam.

Not suitable : Do not use water jet.

Special exposure hazards : Promptly isolate the scene by removing all persons from the vicinity of the incident if there is a fire. No action shall be taken involving any personal risk or without suitable training. Move containers from fire area if this can be done without risk. Use water spray to keep fire-exposed containers cool. Fire water contaminated with this material must be contained and prevented from being discharged to any waterway, sewer or drain.

Hazardous thermal decomposition products : Decomposition products may include the following materials:
carbon dioxide
carbon monoxide
nitrogen oxides
halogenated compounds
carbonyl halides

Special protective equipment for fire-fighters : Fire-fighters should wear appropriate protective equipment and self-contained breathing apparatus (SCBA) with a full face-piece operated in positive pressure mode.

Section 6. Accidental release measures

Personal precautions : No action shall be taken involving any personal risk or without suitable training. Evacuate surrounding areas. Keep unnecessary and unprotected personnel from entering. Do not touch or walk through spilled material. Shut off all ignition sources. No flares, smoking or flames in hazard area. Do not breathe vapor or mist. Provide adequate ventilation. Wear appropriate respirator when ventilation is inadequate. Put on appropriate personal protective equipment (see Section 8).

Environmental precautions : Avoid dispersal of spilled material and runoff and contact with soil, waterways, drains and sewers. Inform the relevant authorities if the product has caused environmental pollution (sewers, waterways, soil or air). Water polluting material. May be harmful to the environment if released in large quantities.

Methods for cleaning up

Small spill : Stop leak if without risk. Move containers from spill area. Dilute with water and mop up if water-soluble. Alternatively, or if water-insoluble, absorb with an inert dry material and place in an appropriate waste disposal container. Use spark-proof tools and explosion-proof equipment. Dispose of via a licensed waste disposal contractor.

Section 6. Accidental release measures

Large spill : Stop leak if without risk. Move containers from spill area. Approach release from upwind. Prevent entry into sewers, water courses, basements or confined areas. Wash spillages into an effluent treatment plant or proceed as follows. Contain and collect spillage with non-combustible, absorbent material e.g. sand, earth, vermiculite or diatomaceous earth and place in container for disposal according to local regulations (see section 13). Use spark-proof tools and explosion-proof equipment. Dispose of via a licensed waste disposal contractor. Contaminated absorbent material may pose the same hazard as the spilled product. Note: see section 1 for emergency contact information and section 13 for waste disposal.

Section 7. Handling and storage

Handling : Put on appropriate personal protective equipment (see Section 8). Eating, drinking and smoking should be prohibited in areas where this material is handled, stored and processed. Workers should wash hands and face before eating, drinking and smoking. Remove contaminated clothing and protective equipment before entering eating areas. Do not get in eyes or on skin or clothing. Do not breathe vapor or mist. Do not ingest. Avoid release to the environment. Use only with adequate ventilation. Wear appropriate respirator when ventilation is inadequate. Do not enter storage areas and confined spaces unless adequately ventilated. Keep in the original container or an approved alternative made from a compatible material, kept tightly closed when not in use. Store and use away from heat, sparks, open flame or any other ignition source. Use explosion-proof electrical (ventilating, lighting and material handling) equipment. Use non-sparking tools. Take precautionary measures against electrostatic discharges. To avoid fire or explosion, dissipate static electricity during transfer by grounding and bonding containers and equipment before transferring material. Empty containers retain product residue and can be hazardous. Do not reuse container.

Storage : Store in accordance with local regulations. Store in a segregated and approved area. Store in original container protected from direct sunlight in a dry, cool and well-ventilated area, away from incompatible materials (see section 10) and food and drink. Eliminate all ignition sources. Separate from oxidizing materials. Keep container tightly closed and sealed until ready for use. Containers that have been opened must be carefully resealed and kept upright to prevent leakage. Do not store in unlabeled containers. Use appropriate containment to avoid environmental contamination.

Section 8. Exposure controls/personal protection

Product name	Exposure limits
United States	
n-butanol	**ACGIH TLV (United States, 2/2010).** TWA: 20 ppm 8 hour(s). **NIOSH REL (United States, 6/2009). Absorbed through skin.** CEIL: 150 mg/m³ CEIL: 50 ppm **OSHA PEL (United States, 6/2010).** TWA: 300 mg/m³ 8 hour(s). TWA: 100 ppm 8 hour(s).
Methyl amyl ketone	**ACGIH TLV (United States, 2/2010).** TWA: 233 mg/m³ 8 hour(s). TWA: 50 ppm 8 hour(s). **NIOSH REL (United States, 6/2009).** TWA: 465 mg/m³ 10 hour(s). TWA: 100 ppm 10 hour(s). **OSHA PEL (United States, 6/2010).** TWA: 465 mg/m³ 8 hour(s). TWA: 100 ppm 8 hour(s).
xylene	**ACGIH TLV (United States, 1/2008).** STEL: 651 mg/m³ 15 minute(s). STEL: 150 ppm 15 minute(s). TWA: 434 mg/m³ 8 hour(s).

Section 8. Exposure controls/personal protection

	TWA: 100 ppm 8 hour(s). **OSHA PEL (United States, 11/2006).** TWA: 435 mg/m³ 8 hour(s). TWA: 100 ppm 8 hour(s).
Isopropanol	**ACGIH TLV (United States, 2/2010).** STEL: 400 ppm 15 minute(s). TWA: 200 ppm 8 hour(s). **NIOSH REL (United States, 6/2009).** STEL: 1225 mg/m³ 15 minute(s). STEL: 500 ppm 15 minute(s). TWA: 980 mg/m³ 10 hour(s). TWA: 400 ppm 10 hour(s). **OSHA PEL (United States, 6/2010).** TWA: 980 mg/m³ 8 hour(s). TWA: 400 ppm 8 hour(s).
1,2,4-trimethylbenzene	**ACGIH TLV (United States, 1/2008).** TWA: 123 mg/m³ 8 hour(s). TWA: 25 ppm 8 hour(s). **NIOSH REL (United States, 6/2008).** TWA: 125 mg/m³ 10 hour(s). TWA: 25 ppm 10 hour(s).
m-phenylenebis(methylamine)	**ACGIH TLV (United States, 2/2010). Absorbed through skin.** C: 0.1 mg/m³ **NIOSH REL (United States, 6/2009). Absorbed through skin.** CEIL: 0.1 mg/m³
mesitylene	**ACGIH TLV (United States, 1/2008).** TWA: 123 mg/m³ 8 hour(s). TWA: 25 ppm 8 hour(s). **NIOSH REL (United States, 6/2008).** TWA: 125 mg/m³ 10 hour(s). TWA: 25 ppm 10 hour(s).

Consult local authorities for acceptable exposure limits.

Recommended monitoring procedures : If this product contains ingredients with exposure limits, personal, workplace atmosphere or biological monitoring may be required to determine the effectiveness of the ventilation or other control measures and/or the necessity to use respiratory protective equipment.

Engineering measures : Use only with adequate ventilation. Use process enclosures, local exhaust ventilation or other engineering controls to keep worker exposure to airborne contaminants below any recommended or statutory limits. The engineering controls also need to keep gas, vapor or dust concentrations below any lower explosive limits. Use explosion-proof ventilation equipment.

Hygiene measures : Wash hands, forearms and face thoroughly after handling chemical products, before eating, smoking and using the lavatory and at the end of the working period. Appropriate techniques should be used to remove potentially contaminated clothing. Wash contaminated clothing before reusing. Ensure that eyewash stations and safety showers are close to the workstation location.

Dry sanding, flame cutting and/or welding of the dry paint film will give rise to dust and/or hazardous fumes. Wet sanding/flatting should be used wherever possible. If exposure cannot be avoided by the provision of local exhaust ventilation, suitable respiratory protective equipment should be used.

Personal protection

Respiratory : Use a properly fitted, air-purifying or air-fed respirator complying with an approved standard if a risk assessment indicates this is necessary. Respirator selection must be based on known or anticipated exposure levels, the hazards of the product and the safe working limits of the selected respirator.

Section 8. Exposure controls/personal protection

Hands : Chemical-resistant, impervious gloves complying with an approved standard should be worn at all times when handling chemical products if a risk assessment indicates this is necessary.

Eyes : Safety eyewear complying with an approved standard should be used when a risk assessment indicates this is necessary to avoid exposure to liquid splashes, mists or dusts.

Skin : Personal protective equipment for the body should be selected based on the task being performed and the risks involved and should be approved by a specialist before handling this product.

Environmental exposure controls : Emissions from ventilation or work process equipment should be checked to ensure they comply with the requirements of environmental protection legislation. In some cases, fume scrubbers, filters or engineering modifications to the process equipment will be necessary to reduce emissions to acceptable levels.

Section 9. Physical and chemical properties

Physical state : Liquid.

Flash point : Closed cup: 12°C (53.6°F)

Auto-ignition temperature : Not available.

Flammable limits : Not available.

Appearance : Not available.

Odor : Not available.

Odor threshold : Not available.

Specific gravity : 0.944

pH : Not available.

Boiling/condensation point : 82.5°C (180.5°F)

Melting/freezing point : Not available.

Vapor pressure : Not available.

Vapor density : Heavier than air

Density : 7.88 lbs per gal 0.944 g/cm^3

Weight Volatiles : 74.95% (w/w)

Volume Volatiles : 77.03 %(v/v)

Weight Solids : 25.05 %(w/w)

Volume Solids : 22.97 %(v/v)

VOC : 5.1 lbs/gal (611.2 g/l) [ISO 11890-1]

Dispersibility properties : Not dispersible in the following materials: cold water.

Section 10. Stability and reactivity

Stability : The product is stable.

Hazardous polymerization : Under normal conditions of storage and use, hazardous polymerization will not occur.

Conditions to avoid : Avoid all possible sources of ignition (spark or flame). Do not pressurize, cut, weld, braze, solder, drill, grind or expose containers to heat or sources of ignition.

Materials to avoid : Reactive or incompatible with the following materials:
oxidizing materials

Hazardous decomposition products : Under normal conditions of storage and use, hazardous decomposition products should not be produced.

Conditions of reactivity : Flammable in the presence of the following materials or conditions: open flames, sparks and static discharge and oxidizing materials.

Section 11. Toxicological information

United States

Acute toxicity

Product/ingredient name	Result	Species	Dose
4-chloro-α,α,α-trifluorotoluene	LD50 Dermal	Rabbit	>2700 mg/kg
	LD50 Dermal	Rabbit	>2700 mg/kg
	LD50 Oral	Rat	13 g/kg
	LD50 Oral	Rat	>6800 mg/kg
	LD50 Oral	Rat	>6800 mg/kg
	LC50 Inhalation Vapor	Rat	22000 mg/m³
	LC50 Inhalation Vapor	Rat	22000 mg/m³
n-butanol	LD50 Dermal	Rabbit	3400 mg/kg
	LD50 Intraperitoneal	Rat	200 mg/kg
	LD50 Intravenous	Rat	310 mg/kg
	LD50 Oral	Rat	4.36 g/kg
	LD50 Oral	Rat	0.79 g/kg
	LD50 Oral	Rat	790 mg/kg
	LDLo Dermal	Rabbit	5 mL/kg
	TDLo Intraperitoneal	Rat	400 mg/kg
Methyl amyl ketone	LD50 Dermal	Rabbit	12600 uL/kg
	LD50 Intraperitoneal	Rat	800 mg/kg
	LD50 Oral	Rat	1670 mg/kg
	LD50 Oral	Rat	1600 mg/kg
xylene	LD50 Dermal	Rabbit	>1700 mg/kg
	LD50 Intraperitoneal	Rat	2459 mg/kg
	LD50 Oral	Rat	4300 mg/kg
	LD50 Subcutaneous	Rat	1700 mg/kg
Isopropanol	LD50 Dermal	Rabbit	12800 mg/kg
	LD50 Intraperitoneal	Rat	2735 mg/kg
	LD50 Intravenous	Rat	1088 mg/kg
	LD50 Oral	Rat	5045 mg/kg
	LD50 Oral	Rat	5000 mg/kg
	TDLo Intraperitoneal	Rat	800 mg/kg
1,2,4-trimethylbenzene	LD50 Oral	Rat	5 g/kg
	LDLo Intraperitoneal	Rat	1752 mg/kg
m-phenylenebis(methylamine)	LD50 Dermal	Rabbit	2 g/kg
	LD50 Oral	Rat	930 mg/kg
mesitylene	LD50 Oral	Rat	5000 mg/kg
	TDLo Subcutaneous	Rat	12 mL/kg

Conclusion/Summary : Not available.

Chronic toxicity

Conclusion/Summary : Not available.

Irritation/Corrosion

Product/ingredient name	Result	Species	Score	Exposure	Observation
n-butanol	Eyes - Severe irritant	Rabbit	-	-	-
	Skin - Moderate irritant	Rabbit	-	-	-
Methyl amyl ketone	Skin - Mild irritant	Rabbit	-	-	-
Isopropanol	Eyes - Moderate irritant	Rabbit	-	-	-
	Eyes - Severe irritant	Rabbit	-	-	-
	Skin - Mild irritant	Rabbit	-	-	-
m-phenylenebis(methylamine)	Eyes - Severe irritant	Rabbit	-	-	-
	Skin - Severe irritant	Rabbit	-	-	-

Section 11. Toxicological information

Conclusion/Summary : Not available.

Sensitizer

Conclusion/Summary : Not available.

Carcinogenicity

Conclusion/Summary : Not available.

Classification

Product/ingredient name	ACGIH	IARC	EPA	NIOSH	NTP	OSHA
n-butanol	-	-	-	None.	-	-
Methyl amyl ketone	-	-	-	None.	-	-
xylene	A4	3	-	None.	-	-
Isopropanol	A4	3	-	None.	-	-
1,2,4-trimethylbenzene	-	-	-	None.	-	-
m-phenylenebis(methylamine)	-	-	-	None.	-	-
mesitylene	-	-	-	None.	-	-

Mutagenicity

Conclusion/Summary : Not available.

Teratogenicity

Conclusion/Summary : Not available.

Reproductive toxicity

Conclusion/Summary : Not available.

Section 12. Ecological information

Environmental effects : Water polluting material. May be harmful to the environment if released in large quantities.

Aquatic ecotoxicity : Not available.

Biodegradability : Not available.

:

Other adverse effects : No known significant effects or critical hazards.

Ecotoxicological data for one or more components are known and will be made available on request.

Section 13. Disposal considerations

Waste disposal : The generation of waste should be avoided or minimized wherever possible. Significant quantities of waste product residues should not be disposed of via the foul sewer but processed in a suitable effluent treatment plant. Dispose of surplus and non-recyclable products via a licensed waste disposal contractor. Disposal of this product, solutions and any by-products should at all times comply with the requirements of environmental protection and waste disposal legislation and any regional local authority requirements. Waste packaging should be recycled. Incineration or landfill should only be considered when recycling is not feasible. This material and its container must be disposed of in a safe way. Care should be taken when handling emptied containers that have not been cleaned or rinsed out. Empty containers or liners may retain some product residues. Vapor from product residues may create a highly flammable or explosive atmosphere inside the container. Do not cut, weld or grind used containers unless they have been cleaned thoroughly internally. Avoid dispersal of spilled material and runoff and contact with soil, waterways, drains and sewers.

Disposal should be in accordance with applicable regional, national and local laws and regulations.

Refer to Section 7: HANDLING AND STORAGE and Section 8: EXPOSURE CONTROLS/PERSONAL PROTECTION for additional handling information and protection of employees.

Section 14. Transport information

Consult your shipping specialist or supplier for appropriate assignment of the DOT information.

Section 15. Regulatory information

United States

OSHA/HCS status : This material is considered hazardous by the OSHA Hazard Communication Standard (29 CFR 1910.1200).

United States inventory (TSCA 8b) : All components are listed or exempted.

SARA 313

Form R - Reporting requirements :

Product name	CAS number	Concentration
n-butanol	71-36-3	17.83
xylene	1330-20-7	7.1536
Isopropanol	67-63-0	6.4827
1,2,4-trimethylbenzene	95-63-6	5.349

California Prop. 65 : WARNING: This product contains chemicals known to the State of California to cause cancer and birth defects or other reproductive harm.

Canada

WHMIS (Canada) : Class B-2: Flammable liquid
Class D-1B: Material causing immediate and serious toxic effects (Toxic).
Class D-2A: Material causing other toxic effects (Very toxic).
Class D-2B: Material causing other toxic effects (Toxic).
Class E: Corrosive material

Canada inventory : All components are listed or exempted.

EU regulations

Hazard symbol or symbols :

Hazard symbol or symbols : Not available.

Risk phrases
R11- Highly flammable.
R20/22- Harmful by inhalation and if swallowed.
R41- Risk of serious damage to eyes.
R37/38- Irritating to respiratory system and skin.
R43- May cause sensitization by skin contact.
R52/53- Harmful to aquatic organisms, may cause long-term adverse effects in the aquatic environment.

Safety phrases :
S23- Do not breathe vapor or spray.
S24- Avoid contact with skin.
S26- In case of contact with eyes, rinse immediately with plenty of water and seek medical advice.
S37/39- Wear suitable gloves and eye/face protection.
S38- In case of insufficient ventilation, wear suitable respiratory equipment.

International regulations

International lists :
Australia inventory (AICS): At least one component is not listed.
China inventory (IECSC): At least one component is not listed.
Japan inventory: At least one component is not listed.
Korea inventory: At least one component is not listed.
New Zealand Inventory of Chemicals (NZIoC): At least one component is not listed.
Philippines inventory (PICCS): At least one component is not listed.

Section 16. Other information

Notice to reader

To the best of our knowledge, the information contained herein is accurate. However, neither the above-named supplier, nor any of its subsidiaries, assumes any liability whatsoever for the accuracy or completeness of the information contained herein.
Final determination of suitability of any material is the sole responsibility of the user. All materials may present unknown hazards and should be used with caution. Although certain hazards are described herein, we cannot guarantee that these are the only hazards that exist.

Material Safety Data Sheet

Akzo Nobel Coatings Inc. encourages and expects you to read and understand this entire MSDS, as there is important information throughout the document. Further, Akzo Nobel Coatings Inc. expects you to follow the precautions identified in this document unless your use conditions would necessitate other appropriate methods or actions.

To promote safe handling, each customer or recipient should: 1) Notify its employees, agents, contractors, and others whom it knows or believes will use this material of the information contained in this MSDS and any other information regarding hazards and safety; 2) Furnish this same information to each of its customers for the product; 3) Request its customers to notify their employees, customers, and other users of the product of this information; and 4) Notify its employees, agents, contractors, and others that the precautions identified for this product and any other products with which mixtures may be created are transferable and cumulative to the mixture.

Section 1. Chemical product and company identification

Manufacturer

Akzo Nobel Coatings Inc.
5555 Spalding Drive
Norcross, GA 30092
USA 1-800-618-1010

Canadian Supplier

Akzo Nobel Coatings Ltd.
110 Woodbine Downs Blvd.
Unit #4 Etobicoke, Ontario
Canada M9W 5S6 1-800-618-1010

IN CASE OF EMERGENCY (HEALTH OR SPILLS):
CHEMTREC (800) 424-9300 (Inside the US)
CHEMTREC International (703) 527-3887 (Outside the US, collect calls accepted)

Product code : 397413

Product name : Autocoat BT LV260 Primer EP BUFF

MSDS # : 397413C01450764220EN64076

Date of issue : 7/27/2012.

Version : 2.01

Date of printing : 8/16/2012.

For the most recent update to this Material Safety Data Sheet, visit our website at http://www.akzonobelcarrefinishes.net
For additional information call the Akzo Nobel Car Refinishes Techline at 1-800-618-1010.

Section 2. Hazards identification

Emergency overview : WARNING!

FLAMMABLE LIQUID AND VAPOR. HARMFUL IF INHALED. CAUSES RESPIRATORY TRACT, EYE AND SKIN IRRITATION. MAY BE HARMFUL IF ABSORBED THROUGH SKIN OR IF SWALLOWED. CONTAINS MATERIAL THAT CAN CAUSE TARGET ORGAN DAMAGE. POSSIBLE CANCER HAZARD - CONTAINS MATERIAL WHICH MAY CAUSE CANCER, BASED ON ANIMAL DATA.

Potential acute health effects

Inhalation : Toxic by inhalation. Irritating to respiratory system.

Ingestion : Harmful if swallowed.

Skin : Harmful in contact with skin. Severely irritating to the skin.

Eyes : Irritating to eyes.

Potential chronic health effects

Chronic effects : Contains material that can cause target organ damage.

Carcinogenicity : Contains material which may cause cancer, based on animal data. Risk of cancer depends on duration and level of exposure.

Mutagenicity : No known significant effects or critical hazards.

Section 2. Hazards identification

Teratogenicity : No known significant effects or critical hazards.

Developmental effects : No known significant effects or critical hazards.

Fertility effects : No known significant effects or critical hazards.

Target organs : Contains material which causes damage to the following organs: upper respiratory tract, skin, central nervous system (CNS), eye, lens or cornea.
Contains material which may cause damage to the following organs: lungs, the nervous system, peripheral nervous system, nose/sinuses, throat.

Over-exposure signs/symptoms

Inhalation : Adverse symptoms may include the following:
respiratory tract irritation
coughing

Ingestion : No specific data.

Skin : Adverse symptoms may include the following:
irritation
redness

Eyes : Adverse symptoms may include the following:
pain or irritation
watering
redness

Medical conditions aggravated by over-exposure : Pre-existing disorders involving any target organs mentioned in this MSDS as being at risk may be aggravated by over-exposure to this product.

NOTICE: Reports have associated repeated and prolonged OVEREXPOSURE to solvents with permanent brain and nervous system damage. Intentional misuse by deliberately concentrating and inhaling the contents of this package may be harmful or fatal.

See toxicological information (Section 11)

Section 3. Composition/information on ingredients

United States

Name	CAS number	%
Phenol, 4,4'-(1-methylethylidene)bis-, polymer with 2,2'-[(1-methylethylidene)bis(4,1-phenyleneoxymethylene)]bis[oxirane]	25036-25-3	10 - 25
Rutile (TiO2)	1317-80-2	5 - 10
trizinc bis(orthophosphate)	7779-90-0	5 - 10
1-methoxy-2-propanol	107-98-2	5 - 10
reaction product: bisphenol-A-(epichlorhydrin); epoxy resin	25068-38-6	1 - 5
ethyl 3-ethoxypropionate	763-69-9	1 - 5
tert-butyl acetate	540-88-5	1 - 5
methyl acetate	79-20-9	1 - 5
Chlorite-group minerals	1318-59-8	1 - 5
heptan-2-one	110-43-0	1 - 5
aluminium orthophosphate	7784-30-7	1 - 5
n-butyl acetate	123-86-4	1 - 5
ethylbenzene	100-41-4	0.1 - 1

There are no additional ingredients present which, within the current knowledge of the supplier and in the concentrations applicable, are classified as hazardous to health or the environment and hence require reporting in this section.

Section 4. First aid measures

Eye contact : Check for and remove any contact lenses. Immediately flush eyes with plenty of water for at least 15 minutes, occasionally lifting the upper and lower eyelids. Get medical attention immediately.

Skin contact : In case of contact, immediately flush skin with plenty of water for at least 15 minutes while removing contaminated clothing and shoes. Wash clothing before reuse. Clean shoes thoroughly before reuse. Get medical attention immediately.

Inhalation : Move exposed person to fresh air. If not breathing, if breathing is irregular or if respiratory arrest occurs, provide artificial respiration or oxygen by trained personnel. Loosen tight clothing such as a collar, tie, belt or waistband. Get medical attention immediately.

Ingestion : Wash out mouth with water. Do not induce vomiting unless directed to do so by medical personnel. Never give anything by mouth to an unconscious person. Get medical attention immediately.

Protection of first-aiders : No action shall be taken involving any personal risk or without suitable training. If it is suspected that fumes are still present, the rescuer should wear an appropriate mask or self-contained breathing apparatus. It may be dangerous to the person providing aid to give mouth-to-mouth resuscitation. Wash contaminated clothing thoroughly with water before removing it, or wear gloves.

Notes to physician : No specific treatment. Treat symptomatically. Contact poison treatment specialist immediately if large quantities have been ingested or inhaled.

Section 5. Fire-fighting measures

Flammability of the product : Flammable liquid. In a fire or if heated, a pressure increase will occur and the container may burst, with the risk of a subsequent explosion. Runoff to sewer may create fire or explosion hazard.

Extinguishing media

Suitable : Use dry chemical, CO_2, water spray (fog) or foam.

Not suitable : Do not use water jet.

Special exposure hazards : Promptly isolate the scene by removing all persons from the vicinity of the incident if there is a fire. No action shall be taken involving any personal risk or without suitable training. Move containers from fire area if this can be done without risk. Use water spray to keep fire-exposed containers cool.

Hazardous thermal decomposition products : Decomposition products may include the following materials:
carbon dioxide
carbon monoxide
sulfur oxides
phosphorus oxides
halogenated compounds
metal oxide/oxides

Special protective equipment for fire-fighters : Fire-fighters should wear appropriate protective equipment and self-contained breathing apparatus (SCBA) with a full face-piece operated in positive pressure mode.

Section 6. Accidental release measures

Personal precautions : No action shall be taken involving any personal risk or without suitable training. Evacuate surrounding areas. Keep unnecessary and unprotected personnel from entering. Do not touch or walk through spilled material. Shut off all ignition sources. No flares, smoking or flames in hazard area. Do not breathe vapor or mist. Provide adequate ventilation. Wear appropriate respirator when ventilation is inadequate. Put on appropriate personal protective equipment (see Section 8).

Environmental precautions : Avoid dispersal of spilled material and runoff and contact with soil, waterways, drains and sewers. Inform the relevant authorities if the product has caused environmental pollution (sewers, waterways, soil or air).

Methods for cleaning up

Section 6. Accidental release measures

Small spill : Stop leak if without risk. Move containers from spill area. Dilute with water and mop up if water-soluble. Alternatively, or if water-insoluble, absorb with an inert dry material and place in an appropriate waste disposal container. Use spark-proof tools and explosion-proof equipment. Dispose of via a licensed waste disposal contractor.

Large spill : Stop leak if without risk. Move containers from spill area. Approach release from upwind. Prevent entry into sewers, water courses, basements or confined areas. Wash spillages into an effluent treatment plant or proceed as follows. Contain and collect spillage with non-combustible, absorbent material e.g. sand, earth, vermiculite or diatomaceous earth and place in container for disposal according to local regulations (see section 13). Use spark-proof tools and explosion-proof equipment. Dispose of via a licensed waste disposal contractor. Contaminated absorbent material may pose the same hazard as the spilled product. Note: see section 1 for emergency contact information and section 13 for waste disposal.

Section 7. Handling and storage

Handling : Put on appropriate personal protective equipment (see Section 8). Eating, drinking and smoking should be prohibited in areas where this material is handled, stored and processed. Workers should wash hands and face before eating, drinking and smoking. Remove contaminated clothing and protective equipment before entering eating areas. Do not get in eyes or on skin or clothing. Do not breathe vapor or mist. Do not ingest. Use only with adequate ventilation. Wear appropriate respirator when ventilation is inadequate. Do not enter storage areas and confined spaces unless adequately ventilated. Keep in the original container or an approved alternative made from a compatible material, kept tightly closed when not in use. Store and use away from heat, sparks, open flame or any other ignition source. Use explosion-proof electrical (ventilating, lighting and material handling) equipment. Use non-sparking tools. Take precautionary measures against electrostatic discharges. To avoid fire or explosion, dissipate static electricity during transfer by grounding and bonding containers and equipment before transferring material. Empty containers retain product residue and can be hazardous. Do not reuse container.

Storage : Store in accordance with local regulations. Store in a segregated and approved area. Store in original container protected from direct sunlight in a dry, cool and well-ventilated area, away from incompatible materials (see section 10) and food and drink. Eliminate all ignition sources. Separate from oxidizing materials. Keep container tightly closed and sealed until ready for use. Containers that have been opened must be carefully resealed and kept upright to prevent leakage. Do not store in unlabeled containers. Use appropriate containment to avoid environmental contamination.

Section 8. Exposure controls/personal protection

Product name	Exposure limits
United States	
1-methoxy-2-propanol	**ACGIH TLV (United States, 2/2010).** STEL: 553 mg/m³ 15 minute(s). STEL: 150 ppm 15 minute(s). TWA: 369 mg/m³ 8 hour(s). TWA: 100 ppm 8 hour(s). **NIOSH REL (United States, 6/2009).** STEL: 540 mg/m³ 15 minute(s). STEL: 150 ppm 15 minute(s). TWA: 360 mg/m³ 10 hour(s). TWA: 100 ppm 10 hour(s).
tert-butyl acetate	**ACGIH TLV (United States, 2/2010).** TWA: 200 ppm 8 hour(s). TWA: 950 mg/m³ 8 hour(s). **NIOSH REL (United States, 6/2009).** TWA: 200 ppm 10 hour(s). TWA: 950 mg/m³ 10 hour(s).

Section 8. Exposure controls/personal protection

	OSHA PEL (United States, 6/2010). TWA: 200 ppm 8 hour(s). TWA: 950 mg/m³ 8 hour(s).
methyl acetate	**ACGIH TLV (United States, 2/2010).** TWA: 200 ppm 8 hour(s). TWA: 606 mg/m³ 8 hour(s). STEL: 250 ppm 15 minute(s). STEL: 757 mg/m³ 15 minute(s). **NIOSH REL (United States, 6/2009).** TWA: 200 ppm 10 hour(s). TWA: 610 mg/m³ 10 hour(s). STEL: 250 ppm 15 minute(s). STEL: 760 mg/m³ 15 minute(s). **OSHA PEL (United States, 6/2010).** TWA: 200 ppm 8 hour(s). TWA: 610 mg/m³ 8 hour(s).
heptan-2-one	**ACGIH TLV (United States, 2/2010).** TWA: 233 mg/m³ 8 hour(s). TWA: 50 ppm 8 hour(s). **NIOSH REL (United States, 6/2009).** TWA: 465 mg/m³ 10 hour(s). TWA: 100 ppm 10 hour(s). **OSHA PEL (United States, 6/2010).** TWA: 465 mg/m³ 8 hour(s). TWA: 100 ppm 8 hour(s).
aluminium orthophosphate	**ACGIH TLV (United States, 2/2010).** TWA: 1 mg/m³ 8 hour(s). Form: Respirable fraction
n-butyl acetate	**ACGIH TLV (United States, 2/2010).** STEL: 200 ppm 15 minute(s). TWA: 150 ppm 8 hour(s). **NIOSH REL (United States, 6/2009).** STEL: 950 mg/m³ 15 minute(s). STEL: 200 ppm 15 minute(s). TWA: 710 mg/m³ 10 hour(s). TWA: 150 ppm 10 hour(s). **OSHA PEL (United States, 6/2010).** TWA: 710 mg/m³ 8 hour(s). TWA: 150 ppm 8 hour(s).
ethylbenzene	**ACGIH TLV (United States, 2/2010).** TWA: 20 ppm 8 hour(s). **NIOSH REL (United States, 6/2009).** STEL: 545 mg/m³ 15 minute(s). STEL: 125 ppm 15 minute(s). TWA: 435 mg/m³ 10 hour(s). TWA: 100 ppm 10 hour(s). **OSHA PEL (United States, 6/2010).** TWA: 435 mg/m³ 8 hour(s). TWA: 100 ppm 8 hour(s).

Consult local authorities for acceptable exposure limits.

Recommended monitoring procedures : If this product contains ingredients with exposure limits, personal, workplace atmosphere or biological monitoring may be required to determine the effectiveness of the ventilation or other control measures and/or the necessity to use respiratory protective equipment.

Engineering measures : Use only with adequate ventilation. Use process enclosures, local exhaust ventilation or other engineering controls to keep worker exposure to airborne contaminants below any recommended or statutory limits. The engineering controls also need to keep gas, vapor or dust concentrations below any lower explosive limits. Use explosion-proof ventilation equipment.

Section 8. Exposure controls/personal protection

Hygiene measures : Wash hands, forearms and face thoroughly after handling chemical products, before eating, smoking and using the lavatory and at the end of the working period. Appropriate techniques should be used to remove potentially contaminated clothing. Wash contaminated clothing before reusing. Ensure that eyewash stations and safety showers are close to the workstation location.

Dry sanding, flame cutting and/or welding of the dry paint film will give rise to dust and/or hazardous fumes. Wet sanding/flatting should be used wherever possible. If exposure cannot be avoided by the provision of local exhaust ventilation, suitable respiratory protective equipment should be used.

Personal protection

Respiratory : Use a properly fitted, air-purifying or air-fed respirator complying with an approved standard if a risk assessment indicates this is necessary. Respirator selection must be based on known or anticipated exposure levels, the hazards of the product and the safe working limits of the selected respirator.

Hands : Chemical-resistant, impervious gloves complying with an approved standard should be worn at all times when handling chemical products if a risk assessment indicates this is necessary.

Eyes : Safety eyewear complying with an approved standard should be used when a risk assessment indicates this is necessary to avoid exposure to liquid splashes, mists or dusts.

Skin : Personal protective equipment for the body should be selected based on the task being performed and the risks involved and should be approved by a specialist before handling this product.

Environmental exposure controls : Emissions from ventilation or work process equipment should be checked to ensure they comply with the requirements of environmental protection legislation. In some cases, fume scrubbers, filters or engineering modifications to the process equipment will be necessary to reduce emissions to acceptable levels.

Section 9. Physical and chemical properties

Physical state : Liquid.

Flash point : Closed cup: 15°C (59°F)

Auto-ignition temperature : Not available.

Flammable limits : Not available.

Appearance : Not available.

Odor : Not available.

Odor threshold : Not available.

Specific gravity : 1,775

pH : Not available.

Boiling/condensation point : 57°C (134,6°F)

Melting/freezing point : Not available.

Vapor pressure : Not available.

Vapor density : Heavier than air

Density : 14,81 lbs per gal 1,775 g/cm^3

Weight Volatiles : 21.13% (w/w)

Volume Volatiles : 41,52 %(v/v)

Weight Solids : 78,87 %(w/w)

Volume Solids : 58,48 %(v/v)

VOC : 2,45 lbs/gal (294 g/l)

Dispersibility properties : Not dispersible in the following materials: cold water.

Section 10. Stability and reactivity

Stability : The product is stable.

Hazardous polymerization : Under normal conditions of storage and use, hazardous polymerization will not occur.

Conditions to avoid : Avoid all possible sources of ignition (spark or flame). Do not pressurize, cut, weld, braze, solder, drill, grind or expose containers to heat or sources of ignition.

Materials to avoid : Reactive or incompatible with the following materials:
oxidizing materials

Hazardous decomposition products : Under normal conditions of storage and use, hazardous decomposition products should not be produced.

Conditions of reactivity : Highly flammable in the presence of the following materials or conditions: open flames, sparks and static discharge.
Flammable in the presence of the following materials or conditions: oxidizing materials.

Section 11. Toxicological information

United States

Acute toxicity

Product/ingredient name	Result	Species	Dose
methyl acetate	LD50 Dermal	Rabbit	>5 g/kg
	LD50 Dermal	Rabbit	>5000 mg/kg
	LD50 Oral	Rat	>5 g/kg
	LD50 Oral	Rat	>5000 mg/kg
	LDLo Subcutaneous	Rat	8 g/kg
	LC50 Inhalation Vapor	Rat	>16000 ppm
	LC50 Inhalation Vapor	Rat	>16000 ppm
trizinc bis(orthophosphate)	LD50 Intraperitoneal	Rat	551 mg/kg
	TDLo Intratracheal	Rat	250 mg/kg
1-methoxy-2-propanol	LD50 Dermal	Rabbit	13 g/kg
	LD50 Intraperitoneal	Rat	3720 mg/kg
	LD50 Intravenous	Rat	>4200 mg/kg
	LD50 Oral	Rat	6600 mg/kg
	LD50 Subcutaneous	Rat	7800 mg/kg
	LDLo Oral	Rat	3739 mg/kg
ethyl 3-ethoxypropionate	LD50 Dermal	Rabbit	10 mL/kg
	LD50 Oral	Rat	5 g/kg
	LD50 Oral	Rat	3200 mg/kg
tert-butyl acetate	LD50 Oral	Rat	4500 mg/kg
	LD50 Oral	Rat	4100 mg/kg
n-butyl acetate	LD50 Dermal	Rabbit	>17600 mg/kg
	LD50 Oral	Rat	10768 mg/kg
	LC50 Inhalation Vapor	Rat	390 ppm
heptan-2-one	LD50 Dermal	Rabbit	12600 uL/kg
	LD50 Intraperitoneal	Rat	800 mg/kg
	LD50 Oral	Rat	1670 mg/kg
	LD50 Oral	Rat	1600 mg/kg
aluminium orthophosphate	LDLo Oral	Rat	4640 mg/kg
ethylbenzene	LD50 Dermal	Rabbit	>5000 mg/kg
	LD50 Dermal	Rabbit	17800 uL/kg
	LD50 Oral	Rat	3500 mg/kg
	TDLo Dermal	Rat	0,08 mL/kg
	TDLo Intraperitoneal	Rat	1062 mg/kg

Conclusion/Summary : Not available.

Chronic toxicity

Conclusion/Summary : Not available.

Irritation/Corrosion

Product/ingredient name	Result	Species	Score	Exposure	Observation

Section 11. Toxicological information

methyl acetate	Eyes - Moderate irritant	Rabbit	-	24 hours 100 milligrams	-
	Skin - Mild irritant	Rabbit	-	24 hours 500 milligrams	-
	Skin - Moderate irritant	Rabbit	-	24 hours 20 milligrams	-
reaction product: bisphenol-A-(epichlorhydrin); epoxy resin	Eyes - Mild irritant	Rabbit	-	100 milligrams	-
	Eyes - Moderate irritant	Rabbit	-	24 hours 20 milligrams	-
	Eyes - Severe irritant	Rabbit	-	24 hours 5 milligrams	-
	Skin - Moderate irritant	Rabbit	-	24 hours 500 microliters	-
	Skin - Severe irritant	Rabbit	-	24 hours 2 milligrams	-
1-methoxy-2-propanol	Eyes - Mild irritant	Rabbit	-	24 hours 500 milligrams	-
	Skin - Mild irritant	Rabbit	-	500 milligrams	-
ethyl 3-ethoxypropionate	Skin - Mild irritant	Rabbit	-	24 hours 500 milligrams	-
tert-butyl acetate	Eyes - Mild irritant	Rabbit	-	100 microliters	-
	Skin - Mild irritant	Rabbit	-	24 hours 500 microliters	-
n-butyl acetate	Eyes - Moderate irritant	Rabbit	-	100 milligrams	-
	Skin - Moderate irritant	Rabbit	-	24 hours 500 milligrams	-
heptan-2-one	Skin - Mild irritant	Rabbit	-	24 hours 14 milligrams	-
ethylbenzene	Eyes - Severe irritant	Rabbit	-	500 milligrams	-
	Skin - Mild irritant	Rabbit	-	24 hours 15 milligrams	-

Conclusion/Summary : Not available.

Sensitizer

Conclusion/Summary : Not available.

Carcinogenicity

Conclusion/Summary : Not available.

Classification

Product/ingredient name	ACGIH	IARC	EPA	NIOSH	NTP	OSHA
trizinc bis(orthophosphate)	-	-	-	None.	-	-
heptan-2-one	-	-	-	None.	-	-
aluminium orthophosphate	A4	-	-	-	-	-
n-butyl acetate	A4	-	-	None.	-	-
ethylbenzene	A3	2B	-	None.	-	-

Mutagenicity

Conclusion/Summary : Not available.

Teratogenicity

Conclusion/Summary : Not available.

Reproductive toxicity

Conclusion/Summary : Not available.

Section 12. Ecological information

Environmental effects : No known significant effects or critical hazards.

Aquatic ecotoxicity : Not available.

Biodegradability : Not available.

:

Other adverse effects : No known significant effects or critical hazards.

Ecotoxicological data for one or more components are known and will be made available on request.

Section 13. Disposal considerations

Waste disposal : The generation of waste should be avoided or minimized wherever possible. Significant quantities of waste product residues should not be disposed of via the foul sewer but processed in a suitable effluent treatment plant. Dispose of surplus and non-recyclable products via a licensed waste disposal contractor. Disposal of this product, solutions and any by-products should at all times comply with the requirements of environmental protection and waste disposal legislation and any regional local authority requirements. Waste packaging should be recycled. Incineration or landfill should only be considered when recycling is not feasible. This material and its container must be disposed of in a safe way. Care should be taken when handling emptied containers that have not been cleaned or rinsed out. Empty containers or liners may retain some product residues. Vapor from product residues may create a highly flammable or explosive atmosphere inside the container. Do not cut, weld or grind used containers unless they have been cleaned thoroughly internally. Avoid dispersal of spilled material and runoff and contact with soil, waterways, drains and sewers.

Disposal should be in accordance with applicable regional, national and local laws and regulations.

Refer to Section 7: HANDLING AND STORAGE and Section 8: EXPOSURE CONTROLS/PERSONAL PROTECTION for additional handling information and protection of employees.

Section 14. Transport information

Consult your shipping specialist or supplier for appropriate assignment of the DOT information.

Section 15. Regulatory information

United States

OSHA/HCS status : This material is considered hazardous by the OSHA Hazard Communication Standard (29 CFR 1910.1200).

United States inventory (TSCA 8b) : All components are listed or exempted.

SARA 313

Form R - Reporting requirements :

Product name	CAS number	Concentration
trizinc bis(orthophosphate)	7779-90-0	6.47
ethylbenzene	100-41-4	0.10

California Prop. 65 : WARNING: This product contains a chemical known to the State of California to cause cancer.

Canada

WHMIS (Canada) : Class B-2: Flammable liquid
Class D-1B: Material causing immediate and serious toxic effects (Toxic).
Class D-2A: Material causing other toxic effects (Very toxic).
Class D-2B: Material causing other toxic effects (Toxic).

Canada inventory : All components are listed or exempted.

EU regulations

Section 15. Regulatory information

Hazard symbol or symbols :

Hazard symbol or symbols : Not available.

Risk phrases

R11- Highly flammable.
R36/38- Irritating to eyes and skin.
R43- May cause sensitization by skin contact.
R50/53- Very toxic to aquatic organisms, may cause long-term adverse effects in the aquatic environment.

Safety phrases :

S23- Do not breathe vapor or spray.
S24- Avoid contact with skin.
S37- Wear suitable gloves.
S38- In case of insufficient ventilation, wear suitable respiratory equipment.
S61- Avoid release to the environment. Refer to special instructions/safety data sheet.

International regulations

International lists :

Australia inventory (AICS): At least one component is not listed.
China inventory (IECSC): At least one component is not listed.
Japan inventory: At least one component is not listed.
Korea inventory: At least one component is not listed.
New Zealand Inventory of Chemicals (NZIoC): At least one component is not listed.
Philippines inventory (PICCS): At least one component is not listed.

Section 16. Other information

Notice to reader

To the best of our knowledge, the information contained herein is accurate. However, neither the above-named supplier, nor any of its subsidiaries, assumes any liability whatsoever for the accuracy or completeness of the information contained herein.
Final determination of suitability of any material is the sole responsibility of the user. All materials may present unknown hazards and should be used with caution. Although certain hazards are described herein, we cannot guarantee that these are the only hazards that exist.

Material Safety Data Sheet

Akzo Nobel Coatings Inc. encourages and expects you to read and understand this entire MSDS, as there is important information throughout the document. Further, Akzo Nobel Coatings Inc. expects you to follow the precautions identified in this document unless your use conditions would necessitate other appropriate methods or actions.

To promote safe handling, each customer or recipient should: 1) Notify its employees, agents, contractors, and others whom it knows or believes will use this material of the information contained in this MSDS and any other information regarding hazards and safety; 2) Furnish this same information to each of its customers for the product; 3) Request its customers to notify their employees, customers, and other users of the product of this information; and 4) Notify its employees, agents, contractors, and others that the precautions identified for this product and any other products with which mixtures may be created are transferable and cumulative to the mixture.

Section 1. Chemical product and company identification

Manufacturer

Akzo Nobel Coatings Inc.
5555 Spalding Drive
Norcross, GA 30092
USA 1-800-618-1010

Canadian Supplier

Akzo Nobel Coatings Ltd.
110 Woodbine Downs Blvd.
Unit #4 Etobicoke, Ontario
Canada M9W 5S6 1-800-618-1010

IN CASE OF EMERGENCY (HEALTH OR SPILLS):
CHEMTREC (800) 424-9300 (Inside the US)
CHEMTREC International (703) 527-3887 (Outside the US, collect calls accepted)

Product code : 483626

Product name : Intermix Tint U140 Black Deep

MSDS # : 483626UTE350181250EN62068

Date of issue : 7/11/2012.

Version : 1.08

Date of printing : 7/12/2012.

For the most recent update to this Material Safety Data Sheet, visit our website at http://www.akzonobelcarrefinishes.net
For additional information call the Akzo Nobel Car Refinishes Techline at 1-800-618-1010.

Section 2. Hazards identification

Emergency overview : WARNING!

FLAMMABLE LIQUID AND VAPOR. HARMFUL IF INHALED. CAUSES RESPIRATORY TRACT, EYE AND SKIN IRRITATION. MAY BE HARMFUL IF ABSORBED THROUGH SKIN OR IF SWALLOWED. CONTAINS MATERIAL THAT MAY CAUSE TARGET ORGAN DAMAGE, BASED ON ANIMAL DATA. POSSIBLE CANCER HAZARD - CONTAINS MATERIAL WHICH MAY CAUSE CANCER, BASED ON ANIMAL DATA.

Potential acute health effects

Inhalation : Toxic by inhalation. Irritating to respiratory system.

Ingestion : Harmful if swallowed.

Skin : Harmful in contact with skin. Irritating to skin.

Eyes : Irritating to eyes.

Potential chronic health effects

Chronic effects : Contains material that may cause target organ damage, based on animal data.

Carcinogenicity : Contains material which may cause cancer, based on animal data. Risk of cancer depends on duration and level of exposure.

Section 2. Hazards identification

Mutagenicity : No known significant effects or critical hazards.

Teratogenicity : No known significant effects or critical hazards.

Developmental effects : No known significant effects or critical hazards.

Fertility effects : No known significant effects or critical hazards.

Target organs : Contains material which may cause damage to the following organs: blood, lungs, peripheral nervous system, upper respiratory tract, skin, central nervous system (CNS), eye, lens or cornea, nose/sinuses, testes, throat.

Over-exposure signs/symptoms

Inhalation : Adverse symptoms may include the following:
respiratory tract irritation
coughing

Ingestion : No specific data.

Skin : Adverse symptoms may include the following:
irritation
redness

Eyes : Adverse symptoms may include the following:
pain or irritation
watering
redness

Medical conditions aggravated by over-exposure : Pre-existing disorders involving any target organs mentioned in this MSDS as being at risk may be aggravated by over-exposure to this product.

NOTICE: Reports have associated repeated and prolonged OVEREXPOSURE to solvents with permanent brain and nervous system damage. Intentional misuse by deliberately concentrating and inhaling the contents of this package may be harmful or fatal.

See toxicological information (Section 11)

Section 3. Composition/information on ingredients

United States

Name	CAS number	%
n-butyl acetate	123-86-4	10 - 25
heptan-2-one	110-43-0	5 - 10
2-methoxy-1-methylethyl acetate	108-65-6	5 - 10
Carbon black, hydroxy- and 4-sulfophenyl-modified, sodium salts	481066-70-0	1 - 5
Solvent naphtha (petroleum), light arom.	64742-95-6	1 - 5
1,2,4-trimethylbenzene	95-63-6	1 - 5

There are no additional ingredients present which, within the current knowledge of the supplier and in the concentrations applicable, are classified as hazardous to health or the environment and hence require reporting in this section.

Section 4. First aid measures

Eye contact : Check for and remove any contact lenses. Immediately flush eyes with plenty of water for at least 15 minutes, occasionally lifting the upper and lower eyelids. Get medical attention immediately.

Skin contact : In case of contact, immediately flush skin with plenty of water for at least 15 minutes while removing contaminated clothing and shoes. Wash clothing before reuse. Clean shoes thoroughly before reuse. Get medical attention immediately.

Inhalation : Move exposed person to fresh air. If not breathing, if breathing is irregular or if respiratory arrest occurs, provide artificial respiration or oxygen by trained personnel. Loosen tight clothing such as a collar, tie, belt or waistband. Get medical attention immediately.

Section 4. First aid measures

Ingestion : Wash out mouth with water. Do not induce vomiting unless directed to do so by medical personnel. Never give anything by mouth to an unconscious person. Get medical attention immediately.

Protection of first-aiders : No action shall be taken involving any personal risk or without suitable training. If it is suspected that fumes are still present, the rescuer should wear an appropriate mask or self-contained breathing apparatus. It may be dangerous to the person providing aid to give mouth-to-mouth resuscitation. Wash contaminated clothing thoroughly with water before removing it, or wear gloves.

Notes to physician : No specific treatment. Treat symptomatically. Contact poison treatment specialist immediately if large quantities have been ingested or inhaled.

Section 5. Fire-fighting measures

Flammability of the product : Flammable liquid. In a fire or if heated, a pressure increase will occur and the container may burst, with the risk of a subsequent explosion. Runoff to sewer may create fire or explosion hazard.

Extinguishing media

Suitable : Use dry chemical, CO_2, water spray (fog) or foam.

Not suitable : Do not use water jet.

Special exposure hazards : Promptly isolate the scene by removing all persons from the vicinity of the incident if there is a fire. No action shall be taken involving any personal risk or without suitable training. Move containers from fire area if this can be done without risk. Use water spray to keep fire-exposed containers cool.

Hazardous thermal decomposition products : Decomposition products may include the following materials:
carbon dioxide
carbon monoxide
halogenated compounds
metal oxide/oxides

Special protective equipment for fire-fighters : Fire-fighters should wear appropriate protective equipment and self-contained breathing apparatus (SCBA) with a full face-piece operated in positive pressure mode.

Section 6. Accidental release measures

Personal precautions : No action shall be taken involving any personal risk or without suitable training. Evacuate surrounding areas. Keep unnecessary and unprotected personnel from entering. Do not touch or walk through spilled material. Shut off all ignition sources. No flares, smoking or flames in hazard area. Do not breathe vapor or mist. Provide adequate ventilation. Wear appropriate respirator when ventilation is inadequate. Put on appropriate personal protective equipment (see Section 8).

Environmental precautions : Avoid dispersal of spilled material and runoff and contact with soil, waterways, drains and sewers. Inform the relevant authorities if the product has caused environmental pollution (sewers, waterways, soil or air).

Methods for cleaning up

Small spill : Stop leak if without risk. Move containers from spill area. Dilute with water and mop up if water-soluble. Alternatively, or if water-insoluble, absorb with an inert dry material and place in an appropriate waste disposal container. Use spark-proof tools and explosion-proof equipment. Dispose of via a licensed waste disposal contractor.

Large spill : Stop leak if without risk. Move containers from spill area. Approach release from upwind. Prevent entry into sewers, water courses, basements or confined areas. Wash spillages into an effluent treatment plant or proceed as follows. Contain and collect spillage with non-combustible, absorbent material e.g. sand, earth, vermiculite or diatomaceous earth and place in container for disposal according to local regulations (see section 13). Use spark-proof tools and explosion-proof equipment. Dispose of via a licensed waste disposal contractor. Contaminated absorbent material may pose the same hazard as the spilled product. Note: see section 1 for emergency contact information and section 13 for waste disposal.

Section 6. Accidental release measures

Handling : Put on appropriate personal protective equipment (see Section 8). Eating, drinking and smoking should be prohibited in areas where this material is handled, stored and processed. Workers should wash hands and face before eating, drinking and smoking. Remove contaminated clothing and protective equipment before entering eating areas. Do not get in eyes or on skin or clothing. Do not breathe vapor or mist. Do not ingest. Use only with adequate ventilation. Wear appropriate respirator when ventilation is inadequate. Do not enter storage areas and confined spaces unless adequately ventilated. Keep in the original container or an approved alternative made from a compatible material, kept tightly closed when not in use. Store and use away from heat, sparks, open flame or any other ignition source. Use explosion-proof electrical (ventilating, lighting and material handling) equipment. Use non-sparking tools. Take precautionary measures against electrostatic discharges. To avoid fire or explosion, dissipate static electricity during transfer by grounding and bonding containers and equipment before transferring material. Empty containers retain product residue and can be hazardous. Do not reuse container.

Storage : Store in accordance with local regulations. Store in a segregated and approved area. Store in original container protected from direct sunlight in a dry, cool and well-ventilated area, away from incompatible materials (see section 10) and food and drink. Eliminate all ignition sources. Separate from oxidizing materials. Keep container tightly closed and sealed until ready for use. Containers that have been opened must be carefully resealed and kept upright to prevent leakage. Do not store in unlabeled containers. Use appropriate containment to avoid environmental contamination.

Section 8. Exposure controls/personal protection

Product name	Exposure limits
United States	
n-Butyl acetate	**ACGIH TLV (United States, 2/2010).** STEL: 200 ppm 15 minute(s). TWA: 150 ppm 8 hour(s). **NIOSH REL (United States, 6/2009).** STEL: 950 mg/m³ 15 minute(s). STEL: 200 ppm 15 minute(s). TWA: 710 mg/m³ 10 hour(s). TWA: 150 ppm 10 hour(s). **OSHA PEL (United States, 6/2010).** TWA: 710 mg/m³ 8 hour(s). TWA: 150 ppm 8 hour(s).
Methyl amyl ketone	**ACGIH TLV (United States, 2/2010).** TWA: 233 mg/m³ 8 hour(s). TWA: 50 ppm 8 hour(s). **NIOSH REL (United States, 6/2009).** TWA: 465 mg/m³ 10 hour(s). TWA: 100 ppm 10 hour(s). **OSHA PEL (United States, 6/2010).** TWA: 465 mg/m³ 8 hour(s). TWA: 100 ppm 8 hour(s).
2-methoxy-1-methylethyl ace-tate	**AIHA WEEL (United States, 5/2010).** TWA: 50 ppm 8 hour(s).
1,2,4-trimethylbenzene	**ACGIH TLV (United States, 1/2008).** TWA: 123 mg/m³ 8 hour(s). TWA: 25 ppm 8 hour(s). **NIOSH REL (United States, 6/2008).** TWA: 125 mg/m³ 10 hour(s). TWA: 25 ppm 10 hour(s).

Consult local authorities for acceptable exposure limits.

Section 8. Exposure controls/personal protection

Recommended monitoring procedures : If this product contains ingredients with exposure limits, personal, workplace atmosphere or biological monitoring may be required to determine the effectiveness of the ventilation or other control measures and/or the necessity to use respiratory protective equipment.

Engineering measures : Use only with adequate ventilation. Use process enclosures, local exhaust ventilation or other engineering controls to keep worker exposure to airborne contaminants below any recommended or statutory limits. The engineering controls also need to keep gas, vapor or dust concentrations below any lower explosive limits. Use explosion-proof ventilation equipment.

Hygiene measures : Wash hands, forearms and face thoroughly after handling chemical products, before eating, smoking and using the lavatory and at the end of the working period. Appropriate techniques should be used to remove potentially contaminated clothing. Wash contaminated clothing before reusing. Ensure that eyewash stations and safety showers are close to the workstation location.

Dry sanding, flame cutting and/or welding of the dry paint film will give rise to dust and/or hazardous fumes. Wet sanding/flatting should be used wherever possible. If exposure cannot be avoided by the provision of local exhaust ventilation, suitable respiratory protective equipment should be used.

Personal protection

Respiratory : Use a properly fitted, air-purifying or air-fed respirator complying with an approved standard if a risk assessment indicates this is necessary. Respirator selection must be based on known or anticipated exposure levels, the hazards of the product and the safe working limits of the selected respirator.

Hands : Chemical-resistant, impervious gloves complying with an approved standard should be worn at all times when handling chemical products if a risk assessment indicates this is necessary.

Eyes : Safety eyewear complying with an approved standard should be used when a risk assessment indicates this is necessary to avoid exposure to liquid splashes, mists or dusts.

Skin : Personal protective equipment for the body should be selected based on the task being performed and the risks involved and should be approved by a specialist before handling this product.

Environmental exposure controls : Emissions from ventilation or work process equipment should be checked to ensure they comply with the requirements of environmental protection legislation. In some cases, fume scrubbers, filters or engineering modifications to the process equipment will be necessary to reduce emissions to acceptable levels.

Section 9. Physical and chemical properties

Physical state : Liquid.

Flash point : Closed cup: 27°C (80,6°F)

Auto-ignition temperature : Not available.

Flammable limits : Not available.

Appearance : Not available.

Odor : Not available.

Odor threshold : Not available.

Specific gravity : 1,04

pH : Not available.

Boiling/condensation point : 126°C (258,8°F)

Melting/freezing point : Not available.

Vapor pressure : Not available.

Vapor density : Heavier than air

Density : 8.68 lbs per gal 1.04 g/cm^3

Weight Volatiles : 35.73% (w/w)

Section 9. Physical and chemical properties

Volume Volatiles : 42.21 %(v/v)

Weight Solids : 64.27 %(w/w)

Volume Solids : 57.79 %(v/v)

VOC : 3.09 lbs/gal (370 g/l) [ISO 11890-1]

Dispersibility properties : Not dispersible in the following materials: cold water.

Section 10. Stability and reactivity

Stability : The product is stable.

Hazardous polymerization : Under normal conditions of storage and use, hazardous polymerization will not occur.

Conditions to avoid : Avoid all possible sources of ignition (spark or flame). Do not pressurize, cut, weld, braze, solder, drill, grind or expose containers to heat or sources of ignition.

Materials to avoid : Reactive or incompatible with the following materials:
oxidizing materials

Hazardous decomposition products : Under normal conditions of storage and use, hazardous decomposition products should not be produced.

Conditions of reactivity : Highly flammable in the presence of the following materials or conditions: open flames, sparks and static discharge.
Flammable in the presence of the following materials or conditions: oxidizing materials.

Section 11. Toxicological information

United States

Acute toxicity

Product/ingredient name	Result	Species	Dose
Methyl amyl ketone	LD50 Dermal	Rabbit	12600 uL/kg
	LD50 Intraperitoneal	Rat	800 mg/kg
	LD50 Oral	Rat	1670 mg/kg
	LD50 Oral	Rat	1600 mg/kg
n-Butyl acetate	LD50 Dermal	Rabbit	>17600 mg/kg
	LD50 Oral	Rat	10768 mg/kg
	LC50 Inhalation Vapor	Rat	390 ppm
1,2,4-trimethylbenzene	LD50 Oral	Rat	5 g/kg
	LDLo Intraperitoneal	Rat	1752 mg/kg
2-methoxy-1-methylethyl ace-tate	LD50 Dermal	Rabbit	>5 g/kg
	LD50 Oral	Rat	8532 mg/kg

Conclusion/Summary : Not available.

Chronic toxicity

Conclusion/Summary : Not available.

Irritation/Corrosion

Product/ingredient name	Result	Species	Score	Exposure	Observation
heptan-2-one	Skin - Mild irritant	Rabbit	-	24 hours 14 milligrams	-
n-butyl acetate	Eyes - Moderate irritant	Rabbit	-	100 milligrams	-
	Skin - Moderate irritant	Rabbit	-	24 hours 500 milligrams	-
Solvent naphtha (petroleum), light arom.	Eyes - Mild irritant	Rabbit	-	24 hours 100 microliters	-

Conclusion/Summary : Not available.

Sensitizer

Conclusion/Summary : Not available.

Carcinogenicity

Conclusion/Summary : Not available.

Section 11. Toxicological information

Classification

Product/ingredient name	ACGIH	IARC	EPA	NIOSH	NTP	OSHA
n-butyl acetate	A4	-	-	None.	-	-
heptan-2-one	-	-	-	None.	-	-
Carbon black, hydroxy- and 4-sulfophenyl-modified, sodium salts	-	2B	-	-	-	-
1,2,4-trimethylbenzene	-	-	-	None.	-	-

Mutagenicity

Conclusion/Summary : Not available.

Teratogenicity

Conclusion/Summary : Not available.

Reproductive toxicity

Conclusion/Summary : Not available.

Section 12. Ecological information

Environmental effects : No known significant effects or critical hazards.

Aquatic ecotoxicity : Not available.

Biodegradability : Not available.

:

Other adverse effects : No known significant effects or critical hazards.

Ecotoxicological data for one or more components are known and will be made available on request.

Section 13. Disposal considerations

Waste disposal : The generation of waste should be avoided or minimized wherever possible. Significant quantities of waste product residues should not be disposed of via the foul sewer but processed in a suitable effluent treatment plant. Dispose of surplus and non-recyclable products via a licensed waste disposal contractor. Disposal of this product, solutions and any by-products should at all times comply with the requirements of environmental protection and waste disposal legislation and any regional local authority requirements. Waste packaging should be recycled. Incineration or landfill should only be considered when recycling is not feasible. This material and its container must be disposed of in a safe way. Care should be taken when handling emptied containers that have not been cleaned or rinsed out. Empty containers or liners may retain some product residues. Vapor from product residues may create a highly flammable or explosive atmosphere inside the container. Do not cut, weld or grind used containers unless they have been cleaned thoroughly internally. Avoid dispersal of spilled material and runoff and contact with soil, waterways, drains and sewers.

Disposal should be in accordance with applicable regional, national and local laws and regulations.

Refer to Section 7: HANDLING AND STORAGE and Section 8: EXPOSURE CONTROLS/PERSONAL PROTECTION for additional handling information and protection of employees.

Section 14. Transport information

Consult your shipping specialist or supplier for appropriate assignment of the DOT information.

Section 15. Regulatory information

United States

OSHA/HCS status : This material is considered hazardous by the OSHA Hazard Communication Standard (29 CFR 1910.1200).

United States inventory (TSCA 8b) : All components are listed or exempted.

SARA 313

Section 15. Regulatory information

	Product name	CAS number	Concentration
Form R - Reporting requirements :	1,2,4-trimethylbenzene	95-63-6	1.7243

California Prop. 65 : WARNING: This product contains chemicals known to the State of California to cause cancer and birth defects or other reproductive harm.

Canada

WHMIS (Canada) : Class B-2: Flammable liquid
Class D-1B: Material causing immediate and serious toxic effects (Toxic).
Class D-2A: Material causing other toxic effects (Very toxic).
Class D-2B: Material causing other toxic effects (Toxic).

Canada inventory : All components are listed or exempted.

EU regulations

Hazard symbol or symbols : Not available.

Risk phrases
R10- Flammable.
R66- Repeated exposure may cause skin dryness or cracking.
R67- Vapors may cause drowsiness and dizziness.
R52/53- Harmful to aquatic organisms, may cause long-term adverse effects in the aquatic environment.

Safety phrases : S23- Do not breathe vapor or spray.
S38- In case of insufficient ventilation, wear suitable respiratory equipment.

International regulations

International lists : **Australia inventory (AICS)**: All components are listed or exempted.
China inventory (IECSC): At least one component is not listed.
Japan inventory: At least one component is not listed.
Korea inventory: At least one component is not listed.
New Zealand Inventory of Chemicals (NZIoC): All components are listed or exempted.
Philippines inventory (PICCS): All components are listed or exempted.

Section 16. Other information

Notice to reader

To the best of our knowledge, the information contained herein is accurate. However, neither the above-named supplier, nor any of its subsidiaries, assumes any liability whatsoever for the accuracy or completeness of the information contained herein.
Final determination of suitability of any material is the sole responsibility of the user. All materials may present unknown hazards and should be used with caution. Although certain hazards are described herein, we cannot guarantee that these are the only hazards that exist.

SAFETY DATA SHEET

Autocoat BT LV260 Epoxy Primer Hardener Fast

Section 1. Identification

GHS product identifier : **Autocoat BT LV260 Epoxy Primer Hardener Fast**
Other means of identification : 384116

Relevant identified uses of the substance or mixture and uses advised against
: FOR INDUSTRIAL USE ONLY

Supplier/Manufacturer : Akzo Nobel Coatings, Inc.
1845 Maxwell
Troy, MI, 48084
USA
(800) 618-1010

Canadian Supplier : Akzo Nobel Coatings Ltd.
110 Woodbine Downs Blvd.
Unit #4 Etobicoke, Ontario
Canada M9W 5S6
+1 (800) 618-1010

Emergency telephone number : CHEMTREC +1 (800) 424-9300 (Inside the US)
CHEMTREC International +1 (703) 527-3887 (Outside the US, collect calls accepted)

Date of issue / Date of revision : 5 November 2015
Safety Data Sheet Version : 16.06
Date of printing : 5 November 2015

Akzo Nobel Coatings Inc. encourages and expects you to read and understand this entire MSDS, as there is important information throughout the document. Further, Akzo Nobel Coatings Inc. expects you to follow the precautions identified in this document unless your use conditions would necessitate other appropriate methods or actions.

To promote safe handling, each customer or recipient should: 1) Notify its employees, agents, contractors, and others whom it knows or believes will use this material of the information contained in this MSDS and any other information regarding hazards and safety; 2) Furnish this same information to each of its customers for the product; 3) Request its customers to notify their employees, customers, and other users of the product of this information; and 4) Notify its employees, agents, contractors, and others that the precautions identified for this product and any other products with which mixtures may be created are transferable and cumulative to the mixture.

Section 2. Hazards identification

OSHA/HCS status : This material is considered hazardous by the OSHA Hazard Communication Standard (29 CFR 1910.1200).

Classification of the substance or mixture : FLAMMABLE LIQUIDS - Category 3
ACUTE TOXICITY (oral) - Category 4
ACUTE TOXICITY (inhalation) - Category 4
SKIN CORROSION/IRRITATION - Category 2
SERIOUS EYE DAMAGE/ EYE IRRITATION - Category 1
CARCINOGENICITY - Category 2
SPECIFIC TARGET ORGAN TOXICITY (SINGLE EXPOSURE) (Respiratory tract

Section 2. Hazards identification

irritation and Narcotic effects) - Category 3
SPECIFIC TARGET ORGAN TOXICITY (REPEATED EXPOSURE) - Category 2
Percentage of the mixture consisting of ingredient(s) of unknown toxicity: 26.5%

GHS label elements

Hazard pictograms :

Signal word : Danger

Hazard statements : Flammable liquid and vapour.
Harmful if swallowed or if inhaled.
Causes serious eye damage.
Causes skin irritation.
Suspected of causing cancer.
May cause respiratory irritation.
May cause drowsiness or dizziness.
May cause damage to organs through prolonged or repeated exposure.

Precautionary statements

Prevention : Obtain special instructions before use. Do not handle until all safety precautions have been read and understood. Use personal protective equipment as required. Wear protective gloves. Wear eye or face protection. Keep away from heat, hot surfaces, sparks, open flames and other ignition sources. No smoking. Use explosion-proof electrical, ventilating, lighting and all material-handling equipment. Use only non-sparking tools. Take precautionary measures against static discharge. Keep container tightly closed. Use only outdoors or in a well-ventilated area. Do not breathe vapor. Do not eat, drink or smoke when using this product. Wash hands thoroughly after handling.

Response : Get medical attention if you feel unwell. IF exposed or concerned: Get medical attention. IF INHALED: Remove victim to fresh air and keep at rest in a position comfortable for breathing. Call a POISON CENTER or physician if you feel unwell. IF SWALLOWED: Call a POISON CENTER or physician if you feel unwell. Rinse mouth. IF ON SKIN (or hair): Take off immediately all contaminated clothing. Rinse skin with water or shower. IF ON SKIN: Wash with plenty of soap and water. Take off contaminated clothing. If skin irritation occurs: Get medical attention. IF IN EYES: Rinse cautiously with water for several minutes. Remove contact lenses, if present and easy to do. Continue rinsing. Immediately call a POISON CENTER or physician.

Storage : Store locked up. Store in a well-ventilated place. Keep cool.

Disposal : Dispose of contents and container in accordance with all local, regional, national and international regulations.

Hazards not otherwise classified : None known.

Section 3. Composition/information on ingredients

Substance/mixture : Mixture

Ingredient name	%	CAS number
butan-1-ol	30 - 35	71-36-3
Solvent naphtha (petroleum), light arom.	15 - 20	64742-95-6
xylene	10 - 15	1330-20-7
1,2,4-trimethylbenzene	5 - 10	95-63-6
ethylbenzene	1 - 5	100-41-4
mesitylene	1 - 5	108-67-8
cumene	1 - 5	98-82-8

Occupational exposure limits, if available, are listed in Section 8.

Section 4. First aid measures

Description of necessary first aid measures

Eye contact : Get medical attention immediately. Call a poison center or physician. Immediately flush eyes with plenty of water, occasionally lifting the upper and lower eyelids. Check for and remove any contact lenses. Continue to rinse for at least 10 minutes. Chemical burns must be treated promptly by a physician.

Inhalation : Get medical attention immediately. Call a poison center or physician. Remove victim to fresh air and keep at rest in a position comfortable for breathing. If it is suspected that fumes are still present, the rescuer should wear an appropriate mask or self-contained breathing apparatus. If not breathing, if breathing is irregular or if respiratory arrest occurs, provide artificial respiration or oxygen by trained personnel. It may be dangerous to the person providing aid to give mouth-to-mouth resuscitation. If unconscious, place in recovery position and get medical attention immediately. Maintain an open airway. Loosen tight clothing such as a collar, tie, belt or waistband.

Skin contact : Get medical attention immediately. Call a poison center or physician. Flush contaminated skin with plenty of water. Remove contaminated clothing and shoes. Wash contaminated clothing thoroughly with water before removing it, or wear gloves. Continue to rinse for at least 10 minutes. Chemical burns must be treated promptly by a physician. Wash clothing before reuse. Clean shoes thoroughly before reuse.

Ingestion : Get medical attention immediately. Call a poison center or physician. Wash out mouth with water. Remove dentures if any. Remove victim to fresh air and keep at rest in a position comfortable for breathing. If material has been swallowed and the exposed person is conscious, give small quantities of water to drink. Stop if the exposed person feels sick as vomiting may be dangerous. Do not induce vomiting unless directed to do so by medical personnel. If vomiting occurs, the head should be kept low so that vomit does not enter the lungs. Chemical burns must be treated promptly by a physician. Never give anything by mouth to an unconscious person. If unconscious, place in recovery position and get medical attention immediately. Maintain an open airway. Loosen tight clothing such as a collar, tie, belt or waistband.

Most important symptoms/effects, acute and delayed

Potential acute health effects

Eye contact : Causes serious eye damage.

Inhalation : Harmful if inhaled. Can cause central nervous system (CNS) depression. May cause drowsiness or dizziness. May cause respiratory irritation.

Skin contact : Causes skin irritation.

Section 4. First aid measures

Ingestion : Harmful if swallowed. Can cause central nervous system (CNS) depression. May cause burns to mouth, throat and stomach.

Over-exposure signs/symptoms

Eye contact : Adverse symptoms may include the following:
pain
watering
redness

Inhalation : Adverse symptoms may include the following:
respiratory tract irritation
coughing
nausea or vomiting
headache
drowsiness/fatigue
dizziness/vertigo
unconsciousness

Skin contact : Adverse symptoms may include the following:
pain or irritation
redness
blistering may occur

Ingestion : Adverse symptoms may include the following:
stomach pains

Indication of immediate medical attention and special treatment needed, if necessary

Notes to physician : Treat symptomatically. Contact poison treatment specialist immediately if large quantities have been ingested or inhaled.

Specific treatments : No specific treatment.

Protection of first-aiders : No action shall be taken involving any personal risk or without suitable training. If it is suspected that fumes are still present, the rescuer should wear an appropriate mask or self-contained breathing apparatus. It may be dangerous to the person providing aid to give mouth-to-mouth resuscitation. Wash contaminated clothing thoroughly with water before removing it, or wear gloves.

See toxicological information (Section 11)

Section 5. Fire-fighting measures

Extinguishing media

Suitable extinguishing media : Use dry chemical, CO_2, water spray (fog) or foam.

Unsuitable extinguishing media : Do not use water jet.

Specific hazards arising from the chemical : Flammable liquid and vapour. In a fire or if heated, a pressure increase will occur and the container may burst, with the risk of a subsequent explosion. Runoff to sewer may create fire or explosion hazard. Fire water contaminated with this material must be contained and prevented from being discharged to any waterway, sewer or drain.

Hazardous thermal decomposition products : Decomposition products may include the following materials:
carbon dioxide
carbon monoxide

Section 5. Fire-fighting measures

Special protective actions for fire-fighters : Promptly isolate the scene by removing all persons from the vicinity of the incident if there is a fire. No action shall be taken involving any personal risk or without suitable training. Move containers from fire area if this can be done without risk. Use water spray to keep fire-exposed containers cool.

Special protective equipment for fire-fighters : Fire-fighters should wear appropriate protective equipment and self-contained breathing apparatus (SCBA) with a full face-piece operated in positive pressure mode.

Section 6. Accidental release measures

Personal precautions, protective equipment and emergency procedures

For non-emergency personnel : No action shall be taken involving any personal risk or without suitable training. Evacuate surrounding areas. Keep unnecessary and unprotected personnel from entering. Do not touch or walk through spilled material. Shut off all ignition sources. No flares, smoking or flames in hazard area. Do not breathe vapor or mist. Provide adequate ventilation. Wear appropriate respirator when ventilation is inadequate. Put on appropriate personal protective equipment.

For emergency responders : If specialised clothing is required to deal with the spillage, take note of any information in Section 8 on suitable and unsuitable materials. See also the information in "For non-emergency personnel".

Environmental precautions : Avoid dispersal of spilled material and runoff and contact with soil, waterways, drains and sewers. Inform the relevant authorities if the product has caused environmental pollution (sewers, waterways, soil or air). Water polluting material. May be harmful to the environment if released in large quantities.

Methods and materials for containment and cleaning up

Small spill : Stop leak if without risk. Move containers from spill area. Use spark-proof tools and explosion-proof equipment. Dilute with water and mop up if water-soluble. Alternatively, or if water-insoluble, absorb with an inert dry material and place in an appropriate waste disposal container. Dispose of via a licensed waste disposal contractor.

Large spill : Stop leak if without risk. Move containers from spill area. Use spark-proof tools and explosion-proof equipment. Approach release from upwind. Prevent entry into sewers, water courses, basements or confined areas. Wash spillages into an effluent treatment plant or proceed as follows. Contain and collect spillage with non-combustible, absorbent material e.g. sand, earth, vermiculite or diatomaceous earth and place in container for disposal according to local regulations (see Section 13). Dispose of via a licensed waste disposal contractor. Contaminated absorbent material may pose the same hazard as the spilled product. Note: see Section 1 for emergency contact information and Section 13 for waste disposal.

Section 7. Handling and storage

Precautions for safe handling

Protective measures : Put on appropriate personal protective equipment (see Section 8). Avoid exposure - obtain special instructions before use. Do not handle until all safety precautions have been read and understood. Do not get in eyes or on skin or clothing. Do not breathe vapor or mist. Do not ingest. Avoid release to the environment. Use only with adequate ventilation. Wear appropriate respirator when ventilation is inadequate. Do not enter storage areas and confined spaces unless adequately ventilated. Keep in the original container or an approved alternative made from a compatible material, kept

Section 7. Handling and storage

tightly closed when not in use. Store and use away from heat, sparks, open flame or any other ignition source. Use explosion-proof electrical (ventilating, lighting and material handling) equipment. Use only non-sparking tools. Take precautionary measures against electrostatic discharges. Empty containers retain product residue and can be hazardous. Do not reuse container.

Advice on general occupational hygiene : Eating, drinking and smoking should be prohibited in areas where this material is handled, stored and processed. Workers should wash hands and face before eating, drinking and smoking. Remove contaminated clothing and protective equipment before entering eating areas. See also Section 8 for additional information on hygiene measures.

Conditions for safe storage, including any incompatibilities : Store in accordance with local regulations. Store in a segregated and approved area. Store in original container protected from direct sunlight in a dry, cool and well-ventilated area, away from incompatible materials (see Section 10) and food and drink. Store locked up. Eliminate all ignition sources. Separate from oxidizing materials. Keep container tightly closed and sealed until ready for use. Containers that have been opened must be carefully resealed and kept upright to prevent leakage. Do not store in unlabeled containers. Use appropriate containment to avoid environmental contamination.

Section 8. Exposure controls/personal protection

Control parameters

Occupational exposure limits

Ingredient name	Exposure limits
butan-1-ol	**ACGIH TLV (United States, 3/2015).** TWA: 20 ppm 8 hours. **NIOSH REL (United States, 10/2013).** **Absorbed through skin.** CEIL: 150 mg/m³ CEIL: 50 ppm **OSHA PEL (United States, 2/2013).** TWA: 300 mg/m³ 8 hours. TWA: 100 ppm 8 hours.
xylene	**ACGIH TLV (United States, 3/2015).** STEL: 651 mg/m³ 15 minutes. STEL: 150 ppm 15 minutes. TWA: 434 mg/m³ 8 hours. TWA: 100 ppm 8 hours. **OSHA PEL (United States, 2/2013).** TWA: 435 mg/m³ 8 hours. TWA: 100 ppm 8 hours.
1,2,4-trimethylbenzene	**ACGIH TLV (United States, 3/2015).** TWA: 123 mg/m³ 8 hours. TWA: 25 ppm 8 hours. **NIOSH REL (United States, 10/2013).** TWA: 125 mg/m³ 10 hours. TWA: 25 ppm 10 hours.
ethylbenzene	**ACGIH TLV (United States, 3/2015).** TWA: 20 ppm 8 hours. **NIOSH REL (United States, 10/2013).** STEL: 545 mg/m³ 15 minutes.

Section 8. Exposure controls/personal protection

	STEL: 125 ppm 15 minutes. TWA: 435 mg/m³ 10 hours. TWA: 100 ppm 10 hours. **OSHA PEL (United States, 2/2013).** TWA: 435 mg/m³ 8 hours. TWA: 100 ppm 8 hours.
mesitylene	**ACGIH TLV (United States, 3/2015).** TWA: 123 mg/m³ 8 hours. TWA: 25 ppm 8 hours. **NIOSH REL (United States, 10/2013).** TWA: 125 mg/m³ 10 hours. TWA: 25 ppm 10 hours.
cumene	**ACGIH TLV (United States, 3/2015).** TWA: 50 ppm 8 hours. **NIOSH REL (United States, 10/2013).** **Absorbed through skin.** TWA: 245 mg/m³ 10 hours. TWA: 50 ppm 10 hours. **OSHA PEL (United States, 2/2013).** **Absorbed through skin.** TWA: 245 mg/m³ 8 hours. TWA: 50 ppm 8 hours.

Appropriate engineering controls : Use only with adequate ventilation. Use process enclosures, local exhaust ventilation or other engineering controls to keep worker exposure to airborne contaminants below any recommended or statutory limits. The engineering controls also need to keep gas, vapor or dust concentrations below any lower explosive limits. Use explosion-proof ventilation equipment.

Environmental exposure controls : Emissions from ventilation or work process equipment should be checked to ensure they comply with the requirements of environmental protection legislation. In some cases, fume scrubbers, filters or engineering modifications to the process equipment will be necessary to reduce emissions to acceptable levels.

Individual protection measures

Hygiene measures : Wash hands, forearms and face thoroughly after handling chemical products, before eating, smoking and using the lavatory and at the end of the working period. Appropriate techniques should be used to remove potentially contaminated clothing. Wash contaminated clothing before reusing. Ensure that eyewash stations and safety showers are close to the workstation location.

Eye/face protection : Safety eyewear complying with an approved standard should be used when a risk assessment indicates this is necessary to avoid exposure to liquid splashes, mists, gases or dusts. If contact is possible, the following protection should be worn, unless the assessment indicates a higher degree of protection: chemical splash goggles and/ or face shield. If inhalation hazards exist, a full-face respirator may be required instead.

Skin protection

Section 8. Exposure controls/personal protection

Hand protection : Chemical-resistant, impervious gloves complying with an approved standard should be worn at all times when handling chemical products if a risk assessment indicates this is necessary. Considering the parameters specified by the glove manufacturer, check during use that the gloves are still retaining their protective properties. It should be noted that the time to breakthrough for any glove material may be different for different glove manufacturers. In the case of mixtures, consisting of several substances, the protection time of the gloves cannot be accurately estimated.

Body protection : Personal protective equipment for the body should be selected based on the task being performed and the risks involved and should be approved by a specialist before handling this product. When there is a risk of ignition from static electricity, wear anti-static protective clothing. For the greatest protection from static discharges, clothing should include anti-static overalls, boots and gloves.

Other skin protection : Appropriate footwear and any additional skin protection measures should be selected based on the task being performed and the risks involved and should be approved by a specialist before handling this product.

Respiratory protection : Use a properly fitted, air-purifying or air-fed respirator complying with an approved standard if a risk assessment indicates this is necessary. Respirator selection must be based on known or anticipated exposure levels, the hazards of the product and the safe working limits of the selected respirator.

Section 9. Physical and chemical properties

Appearance

Physical state : Liquid.

Color : Not available.

Odor : Not available.

Odor threshold : Not available.

pH : Not available.

Melting/freezing point : Not available.

Boiling point : 117.8°C (244°F)

boiling range : Not available.

Flash point : Closed cup: 29°C (84.2°F)

Evaporation rate : Not available.

Flammability (solid, gas) : Not available.

Upper/lower flammability or explosive limits

Upper: : Not determined.

Lower: : Not determined.

Vapor pressure : Not available.

Vapor density : Not available.

Relative density : 0.905

Density : 7.55 lbs/gal 0.905 g/cm³

Solubility : Not available.

Solubility in water : Not available.

Partition coefficient: n-octanol/water : Not available.

Auto-ignition temperature : Not available.

Section 9. Physical and chemical properties

Decomposition temperature : Not available.

Viscosity : Kinematic (room temperature): 1.104712 cm^2/s (110.4712 cSt)

Weight Volatiles : 73.52% (w/w)

Volume Volatiles : 79.13 %(v/v)

Weight Solids : 26.48 %(w/w)

Volume Solids : 20.87 %(v/v)

Regulatory VOC : 5.6 lbs/gal (671 g/l) minus water and exempt solvents

Section 10. Stability and reactivity

Reactivity : No specific test data related to reactivity available for this product or its ingredients.

Chemical stability : The product is stable.

Possibility of hazardous reactions : Under normal conditions of storage and use, hazardous reactions will not occur.

Conditions to avoid : Avoid all possible sources of ignition (spark or flame). Do not pressurize, cut, weld, braze, solder, drill, grind or expose containers to heat or sources of ignition.

Incompatible materials : Reactive or incompatible with the following materials: oxidizing materials

Hazardous decomposition products : Under normal conditions of storage and use, hazardous decomposition products should not be produced.

Section 11. Toxicological information

Information on toxicological effects

Acute toxicity

Product/ingredient name	Result	Species	Dose	Exposure
butan-1-ol	LD50 Dermal	Rabbit	3400 mg/kg	-
	LD50 Oral	Rat	790 mg/kg	-
Solvent naphtha (petroleum), light arom.	LD50 Oral	Rat	8400 mg/kg	-
xylene	LD50 Oral	Rat	4300 mg/kg	-
1,2,4-trimethylbenzene	LD50 Oral	Rat	5 g/kg	-
ethylbenzene	LD50 Dermal	Rabbit	>5000 mg/kg	-
	LD50 Oral	Rat	3500 mg/kg	-
mesitylene	LD50 Oral	Rat	5000 mg/kg	-
cumene	LD50 Oral	Rat	1400 mg/kg	-

Irritation/Corrosion

Section 11. Toxicological information

Product/ingredient name	Result	Species	Score	Exposure	Observation
butan-1-ol	Eyes - Severe irritant	Rabbit	-	24 hours 2 milligrams	-
	Eyes - Severe irritant	Rabbit	-	0.005 Mililiters	-
	Skin - Moderate irritant	Rabbit	-	24 hours 20 milligrams	-
Solvent naphtha (petroleum), light arom.	Eyes - Mild irritant	Rabbit	-	24 hours 100 microliters	-
xylene	Eyes - Mild irritant	Rabbit	-	87 milligrams	-
	Eyes - Severe irritant	Rabbit	-	24 hours 5 milligrams	-
	Skin - Mild irritant	Rat	-	8 hours 60 microliters	-
	Skin - Moderate irritant	Rabbit	-	24 hours 500 milligrams	-
	Skin - Moderate irritant	Rabbit	-	100 Percent	-
ethylbenzene	Eyes - Severe irritant	Rabbit	-	500 milligrams	-
	Skin - Mild irritant	Rabbit	-	24 hours 15 milligrams	-
mesitylene	Eyes - Mild irritant	Rabbit	-	24 hours 500 milligrams	-
	Skin - Moderate irritant	Rabbit	-	24 hours 20 milligrams	-
cumene	Eyes - Mild irritant	Rabbit	-	24 hours 500 milligrams	-
	Eyes - Mild irritant	Rabbit	-	86 milligrams	-
	Skin - Mild irritant	Rabbit	-	24 hours 10 milligrams	-
	Skin - Moderate irritant	Rabbit	-	24 hours 100 milligrams	-

Sensitization

Not available.

Mutagenicity

Not available.

Carcinogenicity

Not available.

Classification

Product/ingredient name	OSHA	IARC	NTP
ethylbenzene	-	2B	-

Reproductive toxicity

Not available.

Teratogenicity

Not available.

Specific target organ toxicity (single exposure)

Section 11. Toxicological information

Name	Category	Route of exposure	Target organs
butan-1-ol	Category 3	Not applicable.	Respiratory tract irritation and Narcotic effects
Solvent naphtha (petroleum), light arom.	Category 3	Not applicable.	Respiratory tract irritation and Narcotic effects
1,2,4-trimethylbenzene	Category 3	Not applicable.	Respiratory tract irritation
mesitylene	Category 3	Not applicable.	Respiratory tract irritation
cumene	Category 3	Not applicable.	Respiratory tract irritation

Specific target organ toxicity (repeated exposure)

Name	Category	Route of exposure	Target organs
ethylbenzene	Category 2	Inhalation	Not determined

Aspiration hazard

Name	Result
Solvent naphtha (petroleum), light arom.	ASPIRATION HAZARD - Category 1
ethylbenzene	ASPIRATION HAZARD - Category 1
cumene	ASPIRATION HAZARD - Category 1

Information on the likely routes of exposure : Not available.

Potential acute health effects

Eye contact : Causes serious eye damage.

Inhalation : Harmful if inhaled. Can cause central nervous system (CNS) depression. May cause drowsiness or dizziness. May cause respiratory irritation.

Skin contact : Causes skin irritation.

Ingestion : Harmful if swallowed. Can cause central nervous system (CNS) depression. May cause burns to mouth, throat and stomach.

Symptoms related to the physical, chemical and toxicological characteristics

Eye contact : Adverse symptoms may include the following:
pain
watering
redness

Inhalation : Adverse symptoms may include the following:
respiratory tract irritation
coughing
nausea or vomiting
headache
drowsiness/fatigue
dizziness/vertigo

Section 11. Toxicological information

unconsciousness

Skin contact : Adverse symptoms may include the following:
pain or irritation
redness
blistering may occur

Ingestion : Adverse symptoms may include the following:
stomach pains

Delayed and immediate effects and also chronic effects from short and long term exposure

Short term exposure

Potential immediate effects : Not available.

Potential delayed effects : Not available.

Long term exposure

Potential immediate effects : Not available.

Potential delayed effects : Not available.

Potential chronic health effects

Not available.

General : May cause damage to organs through prolonged or repeated exposure.

Carcinogenicity : Suspected of causing cancer. Risk of cancer depends on duration and level of exposure.

Mutagenicity : No known significant effects or critical hazards.

Teratogenicity : No known significant effects or critical hazards.

Developmental effects : No known significant effects or critical hazards.

Fertility effects : No known significant effects or critical hazards.

Numerical measures of toxicity

Acute toxicity estimates

Route	ATE value
Oral	1586.8 mg/kg
Dermal	3786.5 mg/kg
Inhalation (gases)	15155.5 ppm
Inhalation (vapors)	37.05 mg/l
Inhalation (dusts and mists)	5.052 mg/l

Section 12. Ecological information

Toxicity

Product/ingredient name	Result	Species	Exposure
butan-1-ol	Acute EC50 1983000 to 2072000 µg/l Fresh water	Daphnia - Daphnia magna	48 hours
	Acute LC50 1910000 µg/l Fresh water	Fish - Pimephales promelas - Juvenile (Fledgling, Hatchling, Weanling)	96 hours
xylene	Acute LC50 8500 µg/l Marine water	Crustaceans - Palaemonetes pugio	48 hours
	Acute LC50 13400 µg/l Fresh water	Fish - Pimephales promelas	96 hours
1,2,4-trimethylbenzene	Acute LC50 4910 µg/l Marine water	Crustaceans - Elasmopus pectenicrus - Adult	48 hours
	Acute LC50 22.4 mg/l Fresh water	Fish - Tilapia zillii	96 hours
ethylbenzene	Acute EC50 4600 µg/l Fresh water	Algae - Pseudokirchneriella subcapitata	72 hours
	Acute EC50 3600 µg/l Fresh water	Algae - Pseudokirchneriella subcapitata	96 hours
	Acute EC50 2930 to 4400 µg/l Fresh water	Daphnia - Daphnia magna - Neonate	48 hours
	Acute LC50 40000 µg/l Marine water	Crustaceans - Cancer magister - Zoea	48 hours
	Acute LC50 4200 µg/l Fresh water	Fish - Oncorhynchus mykiss	96 hours
mesitylene	Acute LC50 13000 µg/l Marine water	Crustaceans - Cancer magister - Zoea	48 hours
	Acute LC50 12520 to 15050 µg/l Fresh water	Fish - Carassius auratus	96 hours
	Chronic NOEC 400 µg/l Fresh water	Daphnia - Daphnia magna	21 days
cumene	Acute EC50 2600 µg/l Fresh water	Algae - Pseudokirchneriella subcapitata	72 hours
	Acute EC50 7400 to 11290 µg/l Fresh water	Crustaceans - Artemia sp. - Nauplii	48 hours
	Acute LC50 30500 µg/l Fresh water	Daphnia - Daphnia magna - Neonate	48 hours
	Acute LC50 2700 µg/l Fresh water	Fish - Oncorhynchus mykiss	96 hours

Persistence and degradability

Not available.

Bioaccumulative potential

Product/ingredient name	$LogP_{ow}$	BCF	Potential
butan-1-ol	1	-	low
Solvent naphtha (petroleum), light arom.	-	10 to 2500	high
xylene	3.12	8.1 to 25.9	low
1,2,4-trimethylbenzene	3.63	243	low
ethylbenzene	3.6	-	low
mesitylene	3.42	161	low
cumene	3.55	94.69	low

Section 12. Ecological information

Mobility in soil

Soil/water partition coefficient (K_{OC}) : Not available.

Other adverse effects : No known significant effects or critical hazards.

Section 13. Disposal considerations

Disposal methods : The generation of waste should be avoided or minimized wherever possible. Disposal of this product, solutions and any by-products should at all times comply with the requirements of environmental protection and waste disposal legislation and any regional local authority requirements. Dispose of surplus and non-recyclable products via a licensed waste disposal contractor. Waste should not be disposed of untreated to the sewer unless fully compliant with the requirements of all authorities with jurisdiction. Waste packaging should be recycled. Incineration or landfill should only be considered when recycling is not feasible. This material and its container must be disposed of in a safe way. Care should be taken when handling emptied containers that have not been cleaned or rinsed out. Empty containers or liners may retain some product residues. Vapor from product residues may create a highly flammable or explosive atmosphere inside the container. Do not cut, weld or grind used containers unless they have been cleaned thoroughly internally. Avoid dispersal of spilled material and runoff and contact with soil, waterways, drains and sewers.

Section 14. Transport information

Special precautions for user : The actual shipping description for this product may vary based several factors including, but not limited to, the volume of material, size of the container, mode of transport and use of exemptions or exceptions found in the applicable regulations. The information provided in Section 14 is one possible shipping description for this product. Consult your shipping specialist or supplier for appropriate assignment of the DOT information.

Transport within user's premises: always transport in closed containers that are upright and secure. Ensure that persons transporting the product know what to do in the event of an accident or spillage.

	DOT Classification	TDG Classification	Mexico Classification	IMDG	IATA
UN number	UN1263	UN1263	UN1263	UN1263	UN1263
UN proper shipping name	PAINT RELATED MATERIAL	PAINT RELATED MATERIAL	PAINT RELATED MATERIAL	PAINT RELATED MATERIAL	PAINT RELATED MATERIAL
Transport hazard class(es)	3	3	3	3	3
Packing group	III	III	III	III	III

Section 14. Transport information

Environmental hazards	No.	No.	No.	No	No.

Section 15. Regulatory information

U.S. Federal regulations

United States inventory (TSCA 8b) : All components are listed or exempted.

SARA 311/312

Classification : Fire hazard
Immediate (acute) health hazard
Delayed (chronic) health hazard

SARA 313

	Product name	CAS number	%
Form R - Reporting requirements	butan-1-ol xylene 1,2,4-trimethylbenzene ethylbenzene cumene	71-36-3 1330-20-7 95-63-6 100-41-4 98-82-8	30 - 35 10 - 15 5 - 10 1 - 5 1 - 5

SARA 313 notifications must not be detached from the SDS and any copying and redistribution of the SDS shall include copying and redistribution of the notice attached to copies of the SDS subsequently redistributed.

California Prop. 65

WARNING: This product contains a chemical known to the State of California to cause cancer.
WARNING: This product contains less than 1% of a chemical known to the State of California to cause birth defects or other reproductive harm.

International lists

National inventory

Australia : All components are listed or exempted.
Canada : At least one component is not listed in DSL but all such components are listed in NDSL.
China : All components are listed or exempted.
Europe : All components are listed or exempted.
Japan : At least one component is not listed.
Malaysia : At least one component is not listed.
New Zealand : At least one component is not listed.
Philippines : At least one component is not listed.
Republic of Korea : All components are listed or exempted.
Taiwan : At least one component is not listed.

Section 16. Other information

Hazardous Material Information System (U.S.A.)

Health	*	2
Flammability		3
Physical hazards		0

Caution: HMIS® ratings are based on a 0-4 rating scale, with 0 representing minimal hazards or risks, and 4 representing significant hazards or risks Although HMIS® ratings are not required on SDSs under 29 CFR 1910.1200, the preparer may choose to provide them. HMIS® ratings are to be used with a fully implemented HMIS® program. HMIS® is a registered mark of the National Paint & Coatings Association (NPCA). HMIS® materials may be purchased exclusively from J. J. Keller (800) 327-6868.

The customer is responsible for determining the PPE code for this material.

National Fire Protection Association (U.S.A.)

Reprinted with permission from NFPA 704-2001, Identification of the Hazards of Materials for Emergency Response Copyright ©1997, National Fire Protection Association, Quincy, MA 02269. This reprinted material is not the complete and official position of the National Fire Protection Association, on the referenced subject which is represented only by the standard in its entirety.

Copyright ©2001, National Fire Protection Association, Quincy, MA 02269. This warning system is intended to be interpreted and applied only by properly trained individuals to identify fire, health and reactivity hazards of chemicals. The user is referred to certain limited number of chemicals with recommended classifications in NFPA 49 and NFPA 325, which would be used as a guideline only. Whether the chemicals are classified by NFPA or not, anyone using the 704 systems to classify chemicals does so at their own risk.

History

Date of issue/Date of revision : 5 November 2015

Version : 16.06

MSDS # : R27610
0007

Key to abbreviations : ATE = Acute Toxicity Estimate
BCF = Bioconcentration Factor
GHS = Globally Harmonized System of Classification and Labelling of Chemicals
IATA = International Air Transport Association
IBC = Intermediate Bulk Container
IMDG = International Maritime Dangerous Goods
LogPow = logarithm of the octanol/water partition coefficient
MARPOL 73/78 = International Convention for the Prevention of Pollution From Ships, 1973 as modified by the Protocol of 1978. ("Marpol" = marine pollution)
UN = United Nations

Notice to reader

Section 16. Other information

To the best of our knowledge, the information contained herein is accurate. However, neither the above-named supplier, nor any of its subsidiaries, assumes any liability whatsoever for the accuracy or completeness of the information contained herein.
Final determination of suitability of any material is the sole responsibility of the user. All materials may present unknown hazards and should be used with caution. Although certain hazards are described herein, we cannot guarantee that these are the only hazards that exist.

Material Safety Data Sheet

Akzo Nobel Coatings Inc. encourages and expects you to read and understand this entire MSDS, as there is important information throughout the document. Further, Akzo Nobel Coatings Inc. expects you to follow the precautions identified in this document unless your use conditions would necessitate other appropriate methods or actions.

To promote safe handling, each customer or recipient should: 1) Notify its employees, agents, contractors, and others whom it knows or believes will use this material of the information contained in this MSDS and any other information regarding hazards and safety; 2) Furnish this same information to each of its customers for the product; 3) Request its customers to notify their employees, customers, and other users of the product of this information; and 4) Notify its employees, agents, contractors, and others that the precautions identified for this product and any other products with which mixtures may be created are transferable and cumulative to the mixture.

Section 1. Chemical product and company identification

Manufacturer

Akzo Nobel Coatings Inc.
5555 Spalding Drive
Norcross, GA 30092
USA 1-800-618-1010

Canadian Supplier

Akzo Nobel Coatings Ltd.
110 Woodbine Downs Blvd.
Unit #4 Etobicoke, Ontario
Canada M9W 5S6 1-800-618-1010

IN CASE OF EMERGENCY (HEALTH OR SPILLS):
CHEMTREC (800) 424-9300 (Inside the US)
CHEMTREC International (703) 527-3887 (Outside the US, collect calls accepted)

Product code : 399146

Product name : R200 Medium Reducer

MSDS # : 399146UTE720177310EN60095

Date of issue : 12/20/2011.

Version : 2.01

Date of printing : 3/6/2012.

For the most recent update to this Material Safety Data Sheet, visit our website at http://www.akzonobelcarrefinishes.net
For additional information call the Akzo Nobel Car Refinishes Techline at 1-800-618-1010.

Section 2. Hazards identification

Emergency overview : WARNING!

FLAMMABLE LIQUID AND VAPOR. CAUSES EYE AND SKIN IRRITATION. MAY BE HARMFUL IF ABSORBED THROUGH SKIN OR IF SWALLOWED. MAY CAUSE RESPIRATORY TRACT IRRITATION. CONTAINS MATERIAL THAT MAY CAUSE TARGET ORGAN DAMAGE, BASED ON ANIMAL DATA.

Potential acute health effects

Inhalation : Slightly irritating to the respiratory system.

Ingestion : Harmful if swallowed.

Skin : Harmful in contact with skin. Severely irritating to the skin.

Eyes : Severely irritating to eyes. Risk of serious damage to eyes.

Potential chronic health effects

Chronic effects : Contains material that may cause target organ damage, based on animal data.

Carcinogenicity : No known significant effects or critical hazards.

Mutagenicity : No known significant effects or critical hazards.

Teratogenicity : No known significant effects or critical hazards.

Developmental effects : No known significant effects or critical hazards.

Section 2. Hazards identification

Fertility effects : No known significant effects or critical hazards.

Target organs : Contains material which may cause damage to the following organs: lungs, peripheral nervous system, upper respiratory tract, skin, central nervous system (CNS), eye, lens or cornea, nose/sinuses, throat.

Over-exposure signs/symptoms

Inhalation : Adverse symptoms may include the following:
respiratory tract irritation
coughing

Ingestion : No specific data.

Skin : Adverse symptoms may include the following:
irritation
redness

Eyes : Adverse symptoms may include the following:
pain or irritation
watering
redness

Medical conditions aggravated by over-exposure : Pre-existing disorders involving any target organs mentioned in this MSDS as being at risk may be aggravated by over-exposure to this product.

NOTICE: Reports have associated repeated and prolonged OVEREXPOSURE to solvents with permanent brain and nervous system damage. Intentional misuse by deliberately concentrating and inhaling the contents of this package may be harmful or fatal.

See toxicological information (Section 11)

Section 3. Composition/information on ingredients

United States

Name	CAS number	%
Methyl amyl ketone	110-43-0	45 - 55
ethyl 3-ethoxypropionate	763-69-9	25 - 35
butanone	78-93-3	10 - 25

There are no additional ingredients present which, within the current knowledge of the supplier and in the concentrations applicable, are classified as hazardous to health or the environment and hence require reporting in this section.

Section 4. First aid measures

Eye contact : Check for and remove any contact lenses. Immediately flush eyes with plenty of water for at least 15 minutes, occasionally lifting the upper and lower eyelids. Get medical attention immediately.

Skin contact : In case of contact, immediately flush skin with plenty of water for at least 15 minutes while removing contaminated clothing and shoes. Wash clothing before reuse. Clean shoes thoroughly before reuse. Get medical attention immediately.

Inhalation : Move exposed person to fresh air. If not breathing, if breathing is irregular or if respiratory arrest occurs, provide artificial respiration or oxygen by trained personnel. Loosen tight clothing such as a collar, tie, belt or waistband. Get medical attention immediately.

Ingestion : Wash out mouth with water. Do not induce vomiting unless directed to do so by medical personnel. Never give anything by mouth to an unconscious person. Get medical attention immediately.

Protection of first-aiders : No action shall be taken involving any personal risk or without suitable training. It may be dangerous to the person providing aid to give mouth-to-mouth resuscitation. Wash contaminated clothing thoroughly with water before removing it, or wear gloves.

Notes to physician : No specific treatment. Treat symptomatically. Contact poison treatment specialist immediately if large quantities have been ingested or inhaled.

Section 5. Fire-fighting measures

Flammability of the product : Flammable liquid. In a fire or if heated, a pressure increase will occur and the container may burst, with the risk of a subsequent explosion. Runoff to sewer may create fire or explosion hazard.

Extinguishing media

Suitable : Use dry chemical, CO_2, water spray (fog) or foam.

Not suitable : Do not use water jet.

Special exposure hazards : Promptly isolate the scene by removing all persons from the vicinity of the incident if there is a fire. No action shall be taken involving any personal risk or without suitable training. Move containers from fire area if this can be done without risk. Use water spray to keep fire-exposed containers cool.

Hazardous thermal decomposition products : Decomposition products may include the following materials:
carbon dioxide
carbon monoxide

Special protective equipment for fire-fighters : Fire-fighters should wear appropriate protective equipment and self-contained breathing apparatus (SCBA) with a full face-piece operated in positive pressure mode.

Section 6. Accidental release measures

Personal precautions : No action shall be taken involving any personal risk or without suitable training. Evacuate surrounding areas. Keep unnecessary and unprotected personnel from entering. Do not touch or walk through spilled material. Shut off all ignition sources. No flares, smoking or flames in hazard area. Avoid breathing vapor or mist. Provide adequate ventilation. Wear appropriate respirator when ventilation is inadequate. Put on appropriate personal protective equipment (see Section 8).

Environmental precautions : Avoid dispersal of spilled material and runoff and contact with soil, waterways, drains and sewers. Inform the relevant authorities if the product has caused environmental pollution (sewers, waterways, soil or air).

Methods for cleaning up

Small spill : Stop leak if without risk. Move containers from spill area. Dilute with water and mop up if water-soluble. Alternatively, or if water-insoluble, absorb with an inert dry material and place in an appropriate waste disposal container. Use spark-proof tools and explosion-proof equipment. Dispose of via a licensed waste disposal contractor.

Large spill : Stop leak if without risk. Move containers from spill area. Approach release from upwind. Prevent entry into sewers, water courses, basements or confined areas. Wash spillages into an effluent treatment plant or proceed as follows. Contain and collect spillage with non-combustible, absorbent material e.g. sand, earth, vermiculite or diatomaceous earth and place in container for disposal according to local regulations (see section 13). Use spark-proof tools and explosion-proof equipment. Dispose of via a licensed waste disposal contractor. Contaminated absorbent material may pose the same hazard as the spilled product. Note: see section 1 for emergency contact information and section 13 for waste disposal.

Section 7. Handling and storage

Handling : Put on appropriate personal protective equipment (see Section 8). Eating, drinking and smoking should be prohibited in areas where this material is handled, stored and processed. Workers should wash hands and face before eating, drinking and smoking. Remove contaminated clothing and protective equipment before entering eating areas. Do not ingest. Avoid contact with eyes, skin and clothing. Avoid breathing vapor or mist. Use only with adequate ventilation. Wear appropriate respirator when ventilation is inadequate. Do not enter storage areas and confined spaces unless adequately ventilated. Keep in the original container or an approved alternative made from a compatible material, kept tightly closed when not in use. Store and use away from heat, sparks, open flame or any other ignition source. Use explosion-proof electrical (ventilating, lighting and material handling) equipment. Use non-sparking tools. Take precautionary measures against electrostatic discharges. To avoid fire or explosion,

Section 7. Handling and storage

dissipate static electricity during transfer by grounding and bonding containers and equipment before transferring material. Empty containers retain product residue and can be hazardous. Do not reuse container.

Storage : Store in accordance with local regulations. Store in a segregated and approved area. Store in original container protected from direct sunlight in a dry, cool and well-ventilated area, away from incompatible materials (see section 10) and food and drink. Eliminate all ignition sources. Separate from oxidizing materials. Keep container tightly closed and sealed until ready for use. Containers that have been opened must be carefully resealed and kept upright to prevent leakage. Do not store in unlabeled containers. Use appropriate containment to avoid environmental contamination.

Section 8. Exposure controls/personal protection

Product name	Exposure limits
United States	
Methyl amyl ketone	**ACGIH TLV (United States, 2/2010).** TWA: 233 mg/m³ 8 hour(s). TWA: 50 ppm 8 hour(s). **NIOSH REL (United States, 6/2009).** TWA: 465 mg/m³ 10 hour(s). TWA: 100 ppm 10 hour(s). **OSHA PEL (United States, 6/2010).** TWA: 465 mg/m³ 8 hour(s). TWA: 100 ppm 8 hour(s).
butanone	**ACGIH TLV (United States, 2/2010).** STEL: 885 mg/m³ 15 minute(s). STEL: 300 ppm 15 minute(s). TWA: 590 mg/m³ 8 hour(s). TWA: 200 ppm 8 hour(s). **NIOSH REL (United States, 6/2009).** STEL: 885 mg/m³ 15 minute(s). STEL: 300 ppm 15 minute(s). TWA: 590 mg/m³ 10 hour(s). TWA: 200 ppm 10 hour(s). **OSHA PEL (United States, 6/2010).** TWA: 590 mg/m³ 8 hour(s). TWA: 200 ppm 8 hour(s).

Consult local authorities for acceptable exposure limits.

Recommended monitoring procedures : If this product contains ingredients with exposure limits, personal, workplace atmosphere or biological monitoring may be required to determine the effectiveness of the ventilation or other control measures and/or the necessity to use respiratory protective equipment.

Engineering measures : Use only with adequate ventilation. Use process enclosures, local exhaust ventilation or other engineering controls to keep worker exposure to airborne contaminants below any recommended or statutory limits. The engineering controls also need to keep gas, vapor or dust concentrations below any lower explosive limits. Use explosion-proof ventilation equipment.

Hygiene measures : Wash hands, forearms and face thoroughly after handling chemical products, before eating, smoking and using the lavatory and at the end of the working period. Appropriate techniques should be used to remove potentially contaminated clothing. Wash contaminated clothing before reusing. Ensure that eyewash stations and safety showers are close to the workstation location.

Dry sanding, flame cutting and/or welding of the dry paint film will give rise to dust and/or hazardous fumes. Wet sanding/flatting should be used wherever possible. If exposure cannot be avoided by the provision of local exhaust ventilation, suitable respiratory protective equipment should be used.

Personal protection

Section 8. Exposure controls/personal protection

Respiratory : Use a properly fitted, air-purifying or air-fed respirator complying with an approved standard if a risk assessment indicates this is necessary. Respirator selection must be based on known or anticipated exposure levels, the hazards of the product and the safe working limits of the selected respirator.

Hands : Chemical-resistant, impervious gloves complying with an approved standard should be worn at all times when handling chemical products if a risk assessment indicates this is necessary.

Eyes : Safety eyewear complying with an approved standard should be used when a risk assessment indicates this is necessary to avoid exposure to liquid splashes, mists or dusts.

Skin : Personal protective equipment for the body should be selected based on the task being performed and the risks involved and should be approved by a specialist before handling this product.

Environmental exposure controls : Emissions from ventilation or work process equipment should be checked to ensure they comply with the requirements of environmental protection legislation. In some cases, fume scrubbers, filters or engineering modifications to the process equipment will be necessary to reduce emissions to acceptable levels.

Section 9. Physical and chemical properties

Physical state : Liquid.

Flash point : Closed cup: 32,8°C (91°F)

Auto-ignition temperature : Not available.

Flammable limits : Not available.

Appearance : Not available.

Odor : Not available.

Odor threshold : Not available.

Specific gravity : 0.855

pH : Not available.

Boiling/condensation point : 79.6°C (175.3°F)

Melting/freezing point : Not available.

Vapor pressure : Not available.

Vapor density : Heavier than air

Density : 7.14 lbs per gal 0.855 g/cm^3

Weight Volatiles : 100% (w/w)

Volume Volatiles : 100 %(v/v)

Weight Solids : 0.00 %(w/w)

Volume Solids : 0.00 %(v/v)

VOC : 7.13 lbs/gal (855 g/l)

Dispersibility properties : Not dispersible in the following materials: cold water.

Section 10. Stability and reactivity

Stability : The product is stable.

Hazardous polymerization : Under normal conditions of storage and use, hazardous polymerization will not occur.

Conditions to avoid : Avoid all possible sources of ignition (spark or flame). Do not pressurize, cut, weld, braze, solder, drill, grind or expose containers to heat or sources of ignition.

Materials to avoid : Reactive or incompatible with the following materials:
oxidizing materials

Hazardous decomposition products : Under normal conditions of storage and use, hazardous decomposition products should not be produced.

Section 11. Toxicological information

United States

Acute toxicity

Product/ingredient name	Result	Species	Dose
Methyl amyl ketone	LD50 Dermal	Rabbit	12600 uL/kg
	LD50 Intraperitoneal	Rat	800 mg/kg
	LD50 Oral	Rat	1670 mg/kg
	LD50 Oral	Rat	1600 mg/kg
ethyl 3-ethoxypropionate	LD50 Dermal	Rabbit	10 mL/kg
	LD50 Oral	Rat	5 g/kg
	LD50 Oral	Rat	3200 mg/kg
butanone	LD50 Dermal	Rabbit	6480 mg/kg
	LD50 Intraperitoneal	Rat	607 mg/kg
	LD50 Oral	Rat	2737 mg/kg

Conclusion/Summary : Not available.

Chronic toxicity

Conclusion/Summary : Not available.

Irritation/Corrosion

Product/ingredient name	Result	Species	Score	Exposure	Observation
Methyl amyl ketone	Skin - Mild irritant	Rabbit	-	-	-
ethyl 3-ethoxypropionate	Skin - Mild irritant	Rabbit	-	-	-
butanone	Skin - Mild irritant	Rabbit	-	-	-
	Skin - Moderate irritant	Rabbit	-	-	-

Conclusion/Summary : Not available.

Sensitizer

Conclusion/Summary : Not available.

Carcinogenicity

Conclusion/Summary : Not available.

Classification

Product/ingredient name	ACGIH	IARC	EPA	NIOSH	NTP	OSHA
Methyl amyl ketone	-	-	-	None.	-	-
butanone	-	-	-	None.	-	-

Mutagenicity

Conclusion/Summary : Not available.

Teratogenicity

Conclusion/Summary : Not available.

Reproductive toxicity

Conclusion/Summary : Not available.

Section 12. Ecological information

Environmental effects : No known significant effects or critical hazards.

Aquatic ecotoxicity : Not available.

Biodegradability : Not available.

:

Other adverse effects : No known significant effects or critical hazards.

Ecotoxicological data for one or more components are known and will be made available on request.

Section 13. Disposal considerations

Waste disposal : The generation of waste should be avoided or minimized wherever possible. Significant quantities of waste product residues should not be disposed of via the foul sewer but processed in a suitable effluent treatment plant. Dispose of surplus and non-recyclable products via a licensed waste disposal contractor. Disposal of this product, solutions and any by-products should at all times comply with the requirements of environmental protection and waste disposal legislation and any regional local authority requirements. Waste packaging should be recycled. Incineration or landfill should only be considered when recycling is not feasible. This material and its container must be disposed of in a safe way. Care should be taken when handling emptied containers that have not been cleaned or rinsed out. Empty containers or liners may retain some product residues. Vapor from product residues may create a highly flammable or explosive atmosphere inside the container. Do not cut, weld or grind used containers unless they have been cleaned thoroughly internally. Avoid dispersal of spilled material and runoff and contact with soil, waterways, drains and sewers.

Disposal should be in accordance with applicable regional, national and local laws and regulations.

Refer to Section 7: HANDLING AND STORAGE and Section 8: EXPOSURE CONTROLS/PERSONAL PROTECTION for additional handling information and protection of employees.

Section 14. Transport information

Consult your shipping specialist or supplier for appropriate assignment of the DOT information.

Section 15. Regulatory information

United States

OSHA/HCS status : This material is considered hazardous by the OSHA Hazard Communication Standard (29 CFR 1910.1200).

United States inventory (TSCA 8b) : All components are listed or exempted.

SARA 313

Form R - Reporting requirements :

Product name	CAS number	Concentration
butanone	78-93-3	18.34

California Prop. 65 : No products were found.

Canada

WHMIS (Canada) : Class B-2: Flammable liquid
Class D-2B: Material causing other toxic effects (Toxic).

Canada inventory : All components are listed or exempted.

EU regulations

Hazard symbol or symbols :

Hazard symbol or symbols : Not available.

Risk phrases
R10- Flammable.
R20/22- Harmful by inhalation and if swallowed.
R66- Repeated exposure may cause skin dryness or cracking.
R52- Harmful to aquatic organisms.

International regulations

Section 15. Regulatory information

International lists : **Australia inventory (AICS)**: All components are listed or exempted.
China inventory (IECSC): All components are listed or exempted.
Japan inventory: All components are listed or exempted.
Korea inventory: All components are listed or exempted.
New Zealand Inventory of Chemicals (NZIoC): All components are listed or exempted.
Philippines inventory (PICCS): All components are listed or exempted.

Section 16. Other information

Notice to reader

To the best of our knowledge, the information contained herein is accurate. However, neither the above-named supplier, nor any of its subsidiaries, assumes any liability whatsoever for the accuracy or completeness of the information contained herein.
Final determination of suitability of any material is the sole responsibility of the user. All materials may present unknown hazards and should be used with caution. Although certain hazards are described herein, we cannot guarantee that these are the only hazards that exist.

Material Safety Data Sheet

Akzo Nobel Coatings Inc. encourages and expects you to read and understand this entire MSDS, as there is important information throughout the document. Further, Akzo Nobel Coatings Inc. expects you to follow the precautions identified in this document unless your use conditions would necessitate other appropriate methods or actions.

To promote safe handling, each customer or recipient should: 1) Notify its employees, agents, contractors, and others whom it knows or believes will use this material of the information contained in this MSDS and any other information regarding hazards and safety; 2) Furnish this same information to each of its customers for the product; 3) Request its customers to notify their employees, customers, and other users of the product of this information; and 4) Notify its employees, agents, contractors, and others that the precautions identified for this product and any other products with which mixtures may be created are transferable and cumulative to the mixture.

Section 1. Chemical product and company identification

Manufacturer

Akzo Nobel Coatings Inc.
5555 Spalding Drive
Norcross, GA 30092
USA 1-800-618-1010

Canadian Supplier

Akzo Nobel Coatings Ltd.
110 Woodbine Downs Blvd.
Unit #4 Etobicoke, Ontario
Canada M9W 5S6 1-800-618-1010

IN CASE OF EMERGENCY (HEALTH OR SPILLS):
CHEMTREC (800) 424-9300 (Inside the US)
CHEMTREC International (703) 527-3887 (Outside the US, collect calls accepted)

Product code : 399149

Product name : R200 Slow Reducer

MSDS # : 399149UTE720177310EN60096

Date of issue : 12/15/2011.

Version : 2.01

Date of printing : 12/15/2011.

For the most recent update to this Material Safety Data Sheet, visit our website at http://www.akzonobelcarrefinishes.net
For additional information call the Akzo Nobel Car Refinishes Techline at 1-800-618-1010.

Section 2. Hazards identification

Emergency overview : WARNING!

FLAMMABLE LIQUID AND VAPOR. COMBUSTIBLE. CAUSES SKIN IRRITATION. MAY BE HARMFUL IF SWALLOWED. MAY CAUSE RESPIRATORY TRACT AND EYE IRRITATION. CONTAINS MATERIAL THAT MAY CAUSE TARGET ORGAN DAMAGE, BASED ON ANIMAL DATA.

Potential acute health effects

Inhalation : Slightly irritating to the respiratory system.

Ingestion : Harmful if swallowed.

Skin : Irritating to skin.

Eyes : Slightly irritating to the eyes.

Potential chronic health effects

Chronic effects : Contains material that may cause target organ damage, based on animal data.

Carcinogenicity : No known significant effects or critical hazards.

Mutagenicity : No known significant effects or critical hazards.

Teratogenicity : No known significant effects or critical hazards.

Developmental effects : No known significant effects or critical hazards.

Section 2. Hazards identification

Fertility effects : No known significant effects or critical hazards.

Target organs : Contains material which may cause damage to the following organs: peripheral nervous system, upper respiratory tract, skin, central nervous system (CNS), eye, lens or cornea, nose/sinuses, throat.

Over-exposure signs/symptoms

Inhalation : Adverse symptoms may include the following:
respiratory tract irritation
coughing

Ingestion : No specific data.

Skin : Adverse symptoms may include the following:
irritation
redness

Eyes : Adverse symptoms may include the following:
irritation
watering
redness

Medical conditions aggravated by over-exposure : Pre-existing disorders involving any target organs mentioned in this MSDS as being at risk may be aggravated by over-exposure to this product.

NOTICE: Reports have associated repeated and prolonged OVEREXPOSURE to solvents with permanent brain and nervous system damage. Intentional misuse by deliberately concentrating and inhaling the contents of this package may be harmful or fatal.

See toxicological information (Section 11)

Section 3. Composition/information on ingredients

United States

Name	CAS number	%
Methyl amyl ketone	110-43-0	55 - 65
ethyl 3-ethoxypropionate	763-69-9	35 - 45

There are no additional ingredients present which, within the current knowledge of the supplier and in the concentrations applicable, are classified as hazardous to health or the environment and hence require reporting in this section.

Section 4. First aid measures

Eye contact : Check for and remove any contact lenses. Immediately flush eyes with plenty of water for at least 15 minutes, occasionally lifting the upper and lower eyelids. Get medical attention immediately.

Skin contact : In case of contact, immediately flush skin with plenty of water for at least 15 minutes while removing contaminated clothing and shoes. Wash clothing before reuse. Clean shoes thoroughly before reuse. Get medical attention immediately.

Inhalation : Move exposed person to fresh air. If not breathing, if breathing is irregular or if respiratory arrest occurs, provide artificial respiration or oxygen by trained personnel. Loosen tight clothing such as a collar, tie, belt or waistband. Get medical attention immediately.

Ingestion : Wash out mouth with water. Do not induce vomiting unless directed to do so by medical personnel. Never give anything by mouth to an unconscious person. Get medical attention immediately.

Protection of first-aiders : No action shall be taken involving any personal risk or without suitable training. It may be dangerous to the person providing aid to give mouth-to-mouth resuscitation.

Notes to physician : No specific treatment. Treat symptomatically. Contact poison treatment specialist immediately if large quantities have been ingested or inhaled.

Section 5. Fire-fighting measures

Flammability of the product : Flammable liquid. In a fire or if heated, a pressure increase will occur and the container may burst, with the risk of a subsequent explosion. Runoff to sewer may create fire or explosion hazard.

Extinguishing media

Suitable : Use dry chemical, CO_2, water spray (fog) or foam.

Not suitable : Do not use water jet.

Special exposure hazards : Promptly isolate the scene by removing all persons from the vicinity of the incident if there is a fire. No action shall be taken involving any personal risk or without suitable training. Move containers from fire area if this can be done without risk. Use water spray to keep fire-exposed containers cool.

Hazardous thermal decomposition products : Decomposition products may include the following materials:
carbon dioxide
carbon monoxide

Special protective equipment for fire-fighters : Fire-fighters should wear appropriate protective equipment and self-contained breathing apparatus (SCBA) with a full face-piece operated in positive pressure mode.

Section 6. Accidental release measures

Personal precautions : No action shall be taken involving any personal risk or without suitable training. Evacuate surrounding areas. Keep unnecessary and unprotected personnel from entering. Do not touch or walk through spilled material. Shut off all ignition sources. No flares, smoking or flames in hazard area. Avoid breathing vapor or mist. Provide adequate ventilation. Wear appropriate respirator when ventilation is inadequate. Put on appropriate personal protective equipment (see Section 8).

Environmental precautions : Avoid dispersal of spilled material and runoff and contact with soil, waterways, drains and sewers. Inform the relevant authorities if the product has caused environmental pollution (sewers, waterways, soil or air).

Methods for cleaning up

Small spill : Stop leak if without risk. Move containers from spill area. Dilute with water and mop up if water-soluble. Alternatively, or if water-insoluble, absorb with an inert dry material and place in an appropriate waste disposal container. Use spark-proof tools and explosion-proof equipment. Dispose of via a licensed waste disposal contractor.

Large spill : Stop leak if without risk. Move containers from spill area. Approach release from upwind. Prevent entry into sewers, water courses, basements or confined areas. Wash spillages into an effluent treatment plant or proceed as follows. Contain and collect spillage with non-combustible, absorbent material e.g. sand, earth, vermiculite or diatomaceous earth and place in container for disposal according to local regulations (see section 13). Use spark-proof tools and explosion-proof equipment. Dispose of via a licensed waste disposal contractor. Contaminated absorbent material may pose the same hazard as the spilled product. Note: see section 1 for emergency contact information and section 13 for waste disposal.

Section 7. Handling and storage

Handling : Put on appropriate personal protective equipment (see Section 8). Eating, drinking and smoking should be prohibited in areas where this material is handled, stored and processed. Workers should wash hands and face before eating, drinking and smoking. Remove contaminated clothing and protective equipment before entering eating areas. Do not ingest. Avoid contact with eyes, skin and clothing. Avoid breathing vapor or mist. Use only with adequate ventilation. Wear appropriate respirator when ventilation is inadequate. Do not enter storage areas and confined spaces unless adequately ventilated. Keep in the original container or an approved alternative made from a compatible material, kept tightly closed when not in use. Store and use away from heat, sparks, open flame or any other ignition source. Use explosion-proof electrical (ventilating, lighting and material handling) equipment. Use non-sparking tools. Take precautionary measures against electrostatic discharges. To avoid fire or explosion,

Section 7. Handling and storage

dissipate static electricity during transfer by grounding and bonding containers and equipment before transferring material. Empty containers retain product residue and can be hazardous. Do not reuse container.

Storage : Store in accordance with local regulations. Store in a segregated and approved area. Store in original container protected from direct sunlight in a dry, cool and well-ventilated area, away from incompatible materials (see section 10) and food and drink. Eliminate all ignition sources. Separate from oxidizing materials. Keep container tightly closed and sealed until ready for use. Containers that have been opened must be carefully resealed and kept upright to prevent leakage. Do not store in unlabeled containers. Use appropriate containment to avoid environmental contamination.

Section 8. Exposure controls/personal protection

Product name	Exposure limits
United States	
Methyl amyl ketone	**ACGIH TLV (United States, 2/2010).** TWA: 233 mg/m³ 8 hour(s). TWA: 50 ppm 8 hour(s). **NIOSH REL (United States, 6/2009).** TWA: 465 mg/m³ 10 hour(s). TWA: 100 ppm 10 hour(s). **OSHA PEL (United States, 6/2010).** TWA: 465 mg/m³ 8 hour(s). TWA: 100 ppm 8 hour(s).

Consult local authorities for acceptable exposure limits.

Recommended monitoring procedures : If this product contains ingredients with exposure limits, personal, workplace atmosphere or biological monitoring may be required to determine the effectiveness of the ventilation or other control measures and/or the necessity to use respiratory protective equipment.

Engineering measures : Use only with adequate ventilation. Use process enclosures, local exhaust ventilation or other engineering controls to keep worker exposure to airborne contaminants below any recommended or statutory limits. The engineering controls also need to keep gas, vapor or dust concentrations below any lower explosive limits. Use explosion-proof ventilation equipment.

Hygiene measures : Wash hands, forearms and face thoroughly after handling chemical products, before eating, smoking and using the lavatory and at the end of the working period. Appropriate techniques should be used to remove potentially contaminated clothing. Wash contaminated clothing before reusing. Ensure that eyewash stations and safety showers are close to the workstation location.

Dry sanding, flame cutting and/or welding of the dry paint film will give rise to dust and/or hazardous fumes. Wet sanding/flatting should be used wherever possible. If exposure cannot be avoided by the provision of local exhaust ventilation, suitable respiratory protective equipment should be used.

Personal protection

Respiratory : Use a properly fitted, air-purifying or air-fed respirator complying with an approved standard if a risk assessment indicates this is necessary. Respirator selection must be based on known or anticipated exposure levels, the hazards of the product and the safe working limits of the selected respirator.

Hands : Chemical-resistant, impervious gloves complying with an approved standard should be worn at all times when handling chemical products if a risk assessment indicates this is necessary.

Eyes : Safety eyewear complying with an approved standard should be used when a risk assessment indicates this is necessary to avoid exposure to liquid splashes, mists or dusts.

Skin : Personal protective equipment for the body should be selected based on the task being performed and the risks involved and should be approved by a specialist before handling this product.

Section 8. Exposure controls/personal protection

Environmental exposure controls : Emissions from ventilation or work process equipment should be checked to ensure they comply with the requirements of environmental protection legislation. In some cases, fume scrubbers, filters or engineering modifications to the process equipment will be necessary to reduce emissions to acceptable levels.

Section 9. Physical and chemical properties

Physical state : Liquid.
Flash point : Closed cup: 49.4°C (120.9°F)
Auto-ignition temperature : Not available.
Flammable limits : Not available.
Appearance : Not available.
Odor : Not available.
Odor threshold : Not available.
Specific gravity : 0.87
pH : Not available.
Boiling/condensation point : 151.1°C (304°F)
Melting/freezing point : Not available.
Vapor pressure : Not available.
Vapor density : Heavier than air
Density : 7.26 lbs per gal 0.87 g/cm^3
Weight Volatiles : 100% (w/w)
Volume Volatiles : 100 %(v/v)
Weight Solids : 0.00 %(w/w)
Volume Solids : 0.00 %(v/v)
VOC : 7.28 lbs/gal (871.8 g/l) [ISO 11890-1]
Dispersibility properties : Not dispersible in the following materials: cold water.

Section 10. Stability and reactivity

Stability : The product is stable.
Hazardous polymerization : Under normal conditions of storage and use, hazardous polymerization will not occur.
Conditions to avoid : Avoid all possible sources of ignition (spark or flame). Do not pressurize, cut, weld, braze, solder, drill, grind or expose containers to heat or sources of ignition.
Materials to avoid : Reactive or incompatible with the following materials:
oxidizing materials
Hazardous decomposition products : Under normal conditions of storage and use, hazardous decomposition products should not be produced.

Section 11. Toxicological information

United States

Acute toxicity

Product/ingredient name	Result	Species	Dose
Methyl amyl ketone	LD50 Dermal	Rabbit	12600 uL/kg
	LD50 Intraperitoneal	Rat	800 mg/kg
	LD50 Oral	Rat	1670 mg/kg
	LD50 Oral	Rat	1600 mg/kg
ethyl 3-ethoxypropionate	LD50 Dermal	Rabbit	10 mL/kg
	LD50 Oral	Rat	5 g/kg
	LD50 Oral	Rat	3200 mg/kg

Conclusion/Summary : Not available.

Chronic toxicity

Section 11. Toxicological information

Conclusion/Summary : Not available.

Irritation/Corrosion

Product/ingredient name	Result	Species	Score	Exposure	Observation
Methyl amyl ketone	Skin - Mild irritant	Rabbit	-	-	-
ethyl 3-ethoxypropionate	Skin - Mild irritant	Rabbit	-	-	-

Conclusion/Summary : Not available.

Sensitizer

Conclusion/Summary : Not available.

Carcinogenicity

Conclusion/Summary : Not available.

Classification

Product/ingredient name	ACGIH	IARC	EPA	NIOSH	NTP	OSHA
Methyl amyl ketone	-	-	-	None.	-	-

Mutagenicity

Conclusion/Summary : Not available.

Teratogenicity

Conclusion/Summary : Not available.

Reproductive toxicity

Conclusion/Summary : Not available.

Section 12. Ecological information

Environmental effects : No known significant effects or critical hazards.

Aquatic ecotoxicity : Not available.

Biodegradability : Not available.

:

Other adverse effects : No known significant effects or critical hazards.

Ecotoxicological data for one or more components are known and will be made available on request.

Section 13. Disposal considerations

Waste disposal : The generation of waste should be avoided or minimized wherever possible. Significant quantities of waste product residues should not be disposed of via the foul sewer but processed in a suitable effluent treatment plant. Dispose of surplus and non-recyclable products via a licensed waste disposal contractor. Disposal of this product, solutions and any by-products should at all times comply with the requirements of environmental protection and waste disposal legislation and any regional local authority requirements. Waste packaging should be recycled. Incineration or landfill should only be considered when recycling is not feasible. This material and its container must be disposed of in a safe way. Care should be taken when handling emptied containers that have not been cleaned or rinsed out. Empty containers or liners may retain some product residues. Vapor from product residues may create a highly flammable or explosive atmosphere inside the container. Do not cut, weld or grind used containers unless they have been cleaned thoroughly internally. Avoid dispersal of spilled material and runoff and contact with soil, waterways, drains and sewers.

Disposal should be in accordance with applicable regional, national and local laws and regulations.

Refer to Section 7: HANDLING AND STORAGE and Section 8: EXPOSURE CONTROLS/PERSONAL PROTECTION for additional handling information and protection of employees.

Section 14. Transport information

Consult your shipping specialist or supplier for appropriate assignment of the DOT information.

Section 15. Regulatory information

United States

OSHA/HCS status : This material is considered hazardous by the OSHA Hazard Communication Standard (29 CFR 1910.1200).

United States inventory (TSCA 8b) : All components are listed or exempted.

California Prop. 65 No products were found.

Canada

WHMIS (Canada) : Class B-3: Combustible liquid with a flash point between 37.8°C (100°F) and 93.3°C (200°F).
Class D-2B: Material causing other toxic effects (Toxic).

Canada inventory : All components are listed or exempted.

EU regulations

Hazard symbol or symbols :

Hazard symbol or symbols : Not available.

Risk phrases
R10- Flammable.
R20/22- Harmful by inhalation and if swallowed.
R66- Repeated exposure may cause skin dryness or cracking.
R52- Harmful to aquatic organisms.

International regulations

International lists : **Australia inventory (AICS)**: All components are listed or exempted.
China inventory (IECSC): All components are listed or exempted.
Japan inventory: All components are listed or exempted.
Korea inventory: All components are listed or exempted.
New Zealand Inventory of Chemicals (NZIoC): All components are listed or exempted.
Philippines inventory (PICCS): All components are listed or exempted.

Section 16. Other information

Notice to reader

To the best of our knowledge, the information contained herein is accurate. However, neither the above-named supplier, nor any of its subsidiaries, assumes any liability whatsoever for the accuracy or completeness of the information contained herein.
Final determination of suitability of any material is the sole responsibility of the user. All materials may present unknown hazards and should be used with caution. Although certain hazards are described herein, we cannot guarantee that these are the only hazards that exist.

Material Safety Data Sheet

Akzo Nobel Coatings Inc. encourages and expects you to read and understand this entire MSDS, as there is important information throughout the document. Further, Akzo Nobel Coatings Inc. expects you to follow the precautions identified in this document unless your use conditions would necessitate other appropriate methods or actions.

To promote safe handling, each customer or recipient should: 1) Notify its employees, agents, contractors, and others whom it knows or believes will use this material of the information contained in this MSDS and any other information regarding hazards and safety; 2) Furnish this same information to each of its customers for the product; 3) Request its customers to notify their employees, customers, and other users of the product of this information; and 4) Notify its employees, agents, contractors, and others that the precautions identified for this product and any other products with which mixtures may be created are transferable and cumulative to the mixture.

Section 1. Chemical product and company identification

Manufacturer

Akzo Nobel Coatings Inc.
5555 Spalding Drive
Norcross, GA 30092
USA 1-800-618-1010

Canadian Supplier

Akzo Nobel Coatings Ltd.
110 Woodbine Downs Blvd.
Unit #4 Etobicoke, Ontario
Canada M9W 5S6 1-800-618-1010

IN CASE OF EMERGENCY (HEALTH OR SPILLS):
CHEMTREC (800) 424-9300 (Inside the US)
CHEMTREC International (703) 527-3887 (Outside the US, collect calls accepted)

Product code : 380833

Product name : SRA Reducer

MSDS # : 380833S01700074130EN27556

Date of issue : 7/14/2012.

Version : 1.05

Date of printing : 7/15/2012.

For the most recent update to this Material Safety Data Sheet, visit our website at http://www.akzonobelcarrefinishes.net
For additional information call the Akzo Nobel Car Refinishes Techline at 1-800-618-1010.

Section 2. Hazards identification

Emergency overview : WARNING!

FLAMMABLE LIQUID AND VAPOR. HARMFUL IF INHALED. CAUSES RESPIRATORY TRACT, EYE AND SKIN IRRITATION. MAY BE HARMFUL IF ABSORBED THROUGH SKIN OR IF SWALLOWED. CONTAINS MATERIAL THAT MAY CAUSE TARGET ORGAN DAMAGE, BASED ON ANIMAL DATA. POSSIBLE BIRTH DEFECT HAZARD - CONTAINS MATERIAL WHICH MAY CAUSE BIRTH DEFECTS, BASED ON ANIMAL DATA.

Potential acute health effects

Inhalation : Toxic by inhalation. Irritating to respiratory system.

Ingestion : Harmful if swallowed.

Skin : Harmful in contact with skin. Irritating to skin.

Eyes : Severely irritating to eyes. Risk of serious damage to eyes.

Potential chronic health effects

Chronic effects : Contains material that may cause target organ damage, based on animal data.

Carcinogenicity : No known significant effects or critical hazards.

Mutagenicity : No known significant effects or critical hazards.

Section 2. Hazards identification

Teratogenicity : Contains material which may cause birth defects, based on animal data.

Developmental effects : No known significant effects or critical hazards.

Fertility effects : No known significant effects or critical hazards.

Target organs : Contains material which may cause damage to the following organs: kidneys, lungs, the reproductive system, liver, upper respiratory tract, skin, central nervous system (CNS), eye, lens or cornea.

Over-exposure signs/symptoms

Inhalation : Adverse symptoms may include the following:
respiratory tract irritation
coughing
reduced fetal weight
increase in fetal deaths
skeletal malformations

Ingestion : Adverse symptoms may include the following:
reduced fetal weight
increase in fetal deaths
skeletal malformations

Skin : Adverse symptoms may include the following:
irritation
redness
reduced fetal weight
increase in fetal deaths
skeletal malformations

Eyes : Adverse symptoms may include the following:
pain or irritation
watering
redness
reduced fetal weight
increase in fetal deaths
skeletal malformations

Medical conditions aggravated by over-exposure : Pre-existing disorders involving any target organs mentioned in this MSDS as being at risk may be aggravated by over-exposure to this product.

NOTICE: Reports have associated repeated and prolonged OVEREXPOSURE to solvents with permanent brain and nervous system damage. Intentional misuse by deliberately concentrating and inhaling the contents of this package may be harmful or fatal.

See toxicological information (Section 11)

Section 3. Composition/information on ingredients

United States

Name	CAS number	%
n-butyl acetate	123-86-4	35 - 45
2-methoxy-1-methylethyl acetate	108-65-6	35 - 45
toluene	108-88-3	10 - 25

There are no additional ingredients present which, within the current knowledge of the supplier and in the concentrations applicable, are classified as hazardous to health or the environment and hence require reporting in this section.

Section 4. First aid measures

Eye contact : Check for and remove any contact lenses. Immediately flush eyes with plenty of water for at least 15 minutes, occasionally lifting the upper and lower eyelids. Get medical attention immediately.

Skin contact : In case of contact, immediately flush skin with plenty of water for at least 15 minutes while removing contaminated clothing and shoes. Wash clothing before reuse. Clean shoes thoroughly before reuse. Get medical attention immediately.

Inhalation : Move exposed person to fresh air. If not breathing, if breathing is irregular or if respiratory arrest occurs, provide artificial respiration or oxygen by trained personnel. Loosen tight clothing such as a collar, tie, belt or waistband. Get medical attention immediately.

Ingestion : Wash out mouth with water. Do not induce vomiting unless directed to do so by medical personnel. Never give anything by mouth to an unconscious person. Get medical attention immediately.

Protection of first-aiders : No action shall be taken involving any personal risk or without suitable training. If it is suspected that fumes are still present, the rescuer should wear an appropriate mask or self-contained breathing apparatus. It may be dangerous to the person providing aid to give mouth-to-mouth resuscitation. Wash contaminated clothing thoroughly with water before removing it, or wear gloves.

Notes to physician : No specific treatment. Treat symptomatically. Contact poison treatment specialist immediately if large quantities have been ingested or inhaled.

Section 5. Fire-fighting measures

Flammability of the product : Flammable liquid. In a fire or if heated, a pressure increase will occur and the container may burst, with the risk of a subsequent explosion. Runoff to sewer may create fire or explosion hazard.

Extinguishing media

Suitable : Use dry chemical, CO_2, water spray (fog) or foam.

Not suitable : Do not use water jet.

Special exposure hazards : Promptly isolate the scene by removing all persons from the vicinity of the incident if there is a fire. No action shall be taken involving any personal risk or without suitable training. Move containers from fire area if this can be done without risk. Use water spray to keep fire-exposed containers cool.

Hazardous thermal decomposition products : Decomposition products may include the following materials:
carbon dioxide
carbon monoxide

Special protective equipment for fire-fighters : Fire-fighters should wear appropriate protective equipment and self-contained breathing apparatus (SCBA) with a full face-piece operated in positive pressure mode.

Section 6. Accidental release measures

Personal precautions : No action shall be taken involving any personal risk or without suitable training. Evacuate surrounding areas. Keep unnecessary and unprotected personnel from entering. Do not touch or walk through spilled material. Shut off all ignition sources. No flares, smoking or flames in hazard area. Do not breathe vapor or mist. Provide adequate ventilation. Wear appropriate respirator when ventilation is inadequate. Put on appropriate personal protective equipment (see Section 8).

Environmental precautions : Avoid dispersal of spilled material and runoff and contact with soil, waterways, drains and sewers. Inform the relevant authorities if the product has caused environmental pollution (sewers, waterways, soil or air).

Methods for cleaning up

Small spill : Stop leak if without risk. Move containers from spill area. Dilute with water and mop up if water-soluble. Alternatively, or if water-insoluble, absorb with an inert dry material and place in an appropriate waste disposal container. Use spark-proof tools and explosion-proof equipment. Dispose of via a licensed waste disposal contractor.

Section 6. Accidental release measures

Large spill : Stop leak if without risk. Move containers from spill area. Approach release from upwind. Prevent entry into sewers, water courses, basements or confined areas. Wash spillages into an effluent treatment plant or proceed as follows. Contain and collect spillage with non-combustible, absorbent material e.g. sand, earth, vermiculite or diatomaceous earth and place in container for disposal according to local regulations (see section 13). Use spark-proof tools and explosion-proof equipment. Dispose of via a licensed waste disposal contractor. Contaminated absorbent material may pose the same hazard as the spilled product. Note: see section 1 for emergency contact information and section 13 for waste disposal.

Section 7. Handling and storage

Handling : Put on appropriate personal protective equipment (see Section 8). Eating, drinking and smoking should be prohibited in areas where this material is handled, stored and processed. Workers should wash hands and face before eating, drinking and smoking. Remove contaminated clothing and protective equipment before entering eating areas. Avoid exposure during pregnancy. Do not get in eyes or on skin or clothing. Do not breathe vapor or mist. Do not ingest. Use only with adequate ventilation. Wear appropriate respirator when ventilation is inadequate. Do not enter storage areas and confined spaces unless adequately ventilated. Keep in the original container or an approved alternative made from a compatible material, kept tightly closed when not in use. Store and use away from heat, sparks, open flame or any other ignition source. Use explosion-proof electrical (ventilating, lighting and material handling) equipment. Use non-sparking tools. Take precautionary measures against electrostatic discharges. To avoid fire or explosion, dissipate static electricity during transfer by grounding and bonding containers and equipment before transferring material. Empty containers retain product residue and can be hazardous. Do not reuse container.

Storage : Store in accordance with local regulations. Store in a segregated and approved area. Store in original container protected from direct sunlight in a dry, cool and well-ventilated area, away from incompatible materials (see section 10) and food and drink. Eliminate all ignition sources. Separate from oxidizing materials. Keep container tightly closed and sealed until ready for use. Containers that have been opened must be carefully resealed and kept upright to prevent leakage. Do not store in unlabeled containers. Use appropriate containment to avoid environmental contamination.

Section 8. Exposure controls/personal protection

Product name	Exposure limits
United States	
n-butyl acetate	**ACGIH TLV (United States, 2/2010).** STEL: 200 ppm 15 minute(s). TWA: 150 ppm 8 hour(s). **NIOSH REL (United States, 6/2009).** STEL: 950 mg/m³ 15 minute(s). STEL: 200 ppm 15 minute(s). TWA: 710 mg/m³ 10 hour(s). TWA: 150 ppm 10 hour(s). **OSHA PEL (United States, 6/2010).** TWA: 710 mg/m³ 8 hour(s). TWA: 150 ppm 8 hour(s).
2-methoxy-1-methylethyl acetate	**AIHA WEEL (United States, 5/2010).** TWA: 50 ppm 8 hour(s).
toluene	**NIOSH REL (United States, 6/2009).** STEL: 560 mg/m³ 15 minute(s). STEL: 150 ppm 15 minute(s). TWA: 375 mg/m³ 10 hour(s). TWA: 100 ppm 10 hour(s). **OSHA PEL Z2 (United States, 11/2006).** AMP: 500 ppm 10 minute(s). CEIL: 300 ppm

Section 8. Exposure controls/personal protection

TWA: 200 ppm 8 hour(s).

ACGIH TLV (United States, 2/2010).

TWA: 20 ppm 8 hour(s).

Consult local authorities for acceptable exposure limits.

Recommended monitoring procedures : If this product contains ingredients with exposure limits, personal, workplace atmosphere or biological monitoring may be required to determine the effectiveness of the ventilation or other control measures and/or the necessity to use respiratory protective equipment.

Engineering measures : Use only with adequate ventilation. Use process enclosures, local exhaust ventilation or other engineering controls to keep worker exposure to airborne contaminants below any recommended or statutory limits. The engineering controls also need to keep gas, vapor or dust concentrations below any lower explosive limits. Use explosion-proof ventilation equipment.

Hygiene measures : Wash hands, forearms and face thoroughly after handling chemical products, before eating, smoking and using the lavatory and at the end of the working period. Appropriate techniques should be used to remove potentially contaminated clothing. Wash contaminated clothing before reusing. Ensure that eyewash stations and safety showers are close to the workstation location.

Dry sanding, flame cutting and/or welding of the dry paint film will give rise to dust and/or hazardous fumes. Wet sanding/flatting should be used wherever possible. If exposure cannot be avoided by the provision of local exhaust ventilation, suitable respiratory protective equipment should be used.

Personal protection

Respiratory : Use a properly fitted, air-purifying or air-fed respirator complying with an approved standard if a risk assessment indicates this is necessary. Respirator selection must be based on known or anticipated exposure levels, the hazards of the product and the safe working limits of the selected respirator.

Hands : Chemical-resistant, impervious gloves complying with an approved standard should be worn at all times when handling chemical products if a risk assessment indicates this is necessary.

Eyes : Safety eyewear complying with an approved standard should be used when a risk assessment indicates this is necessary to avoid exposure to liquid splashes, mists or dusts.

Skin : Personal protective equipment for the body should be selected based on the task being performed and the risks involved and should be approved by a specialist before handling this product.

Environmental exposure controls : Emissions from ventilation or work process equipment should be checked to ensure they comply with the requirements of environmental protection legislation. In some cases, fume scrubbers, filters or engineering modifications to the process equipment will be necessary to reduce emissions to acceptable levels.

Section 9. Physical and chemical properties

Physical state : Liquid.

Flash point : Closed cup: 27°C (80,6°F)

Auto-ignition temperature : Not available.

Flammable limits : Not available.

Appearance : Not available.

Odor : Not available.

Odor threshold : Not available.

Specific gravity : 0,91

pH : Not available.

Boiling/condensation point : 111°C (231,8°F)

Melting/freezing point : Not available.

Section 9. Physical and chemical properties

Vapor pressure : Not available.

Vapor density : Heavier than air

Density : 7,59 lbs per gal 0,91 g/cm^3

Weight Volatiles : 100% (w/w)

Volume Volatiles : 99,97 %(v/v)

Weight Solids : 0,00 %(w/w)

Volume Solids : 0,03 %(v/v)

VOC : 7,6 lbs/gal (910,4 g/l) [ISO 11890-1]

Dispersibility properties : Not dispersible in the following materials: cold water.

Section 10. Stability and reactivity

Stability : The product is stable.

Hazardous polymerization : Under normal conditions of storage and use, hazardous polymerization will not occur.

Conditions to avoid : Avoid all possible sources of ignition (spark or flame). Do not pressurize, cut, weld, braze, solder, drill, grind or expose containers to heat or sources of ignition.

Materials to avoid : Reactive or incompatible with the following materials:
oxidizing materials

Hazardous decomposition products : Under normal conditions of storage and use, hazardous decomposition products should not be produced.

Conditions of reactivity : Highly flammable in the presence of the following materials or conditions: open flames, sparks and static discharge.
Flammable in the presence of the following materials or conditions: oxidizing materials.

Section 11. Toxicological information

United States

Acute toxicity

Product/ingredient name	Result	Species	Dose
n-butyl acetate	LD50 Dermal	Rabbit	>17600 mg/kg
	LD50 Oral	Rat	10768 mg/kg
	LC50 Inhalation Vapor	Rat	390 ppm
toluene	LD50 Dermal	Rabbit	14100 uL/kg
	LD50 Intraperitoneal	Rat	1332 mg/kg
	LD50 Intravenous	Rat	1960 mg/kg
	LD50 Oral	Rat	636 mg/kg
	LD50 Unreported	Rat	6900 mg/kg
	LDLo Intraperitoneal	Rat	2,5 mL/kg
	TDLo Dermal	Rat	26,4 mg/kg
	TDLo Intraperitoneal	Rat	1 g/kg
	TDLo Intraperitoneal	Rat	900 mg/kg
	TDLo Intraperitoneal	Rat	750 mg/kg
	TDLo Intraperitoneal	Rat	600 mg/kg
	TDLo Intraperitoneal	Rat	250 mg/kg
	TDLo Oral	Rat	1200 mg/kg
	TDLo Oral	Rat	1000 mg/kg
	TDLo Oral	Rat	800 mg/kg
	TDLo Oral	Rat	650 mg/kg
	TDLo Oral	Rat	400 mg/kg
2-methoxy-1-methylethyl acetate	LD50 Dermal	Rabbit	>5 g/kg
	LD50 Oral	Rat	9000 mg/kg
	LD50 Oral	Rat	8532 mg/kg

Conclusion/Summary : Not available.

Chronic toxicity

Conclusion/Summary : Not available.

Section 11. Toxicological information

Irritation/Corrosion

Product/ingredient name	Result	Species	Score	Exposure	Observation
n-butyl acetate	Eyes - Moderate irritant	Rabbit	-	100 milligrams	-
	Skin - Moderate irritant	Rabbit	-	24 hours 500 milligrams	-
toluene	Eyes - Mild irritant	Rabbit	-	0,5 minutes 100 milligrams	-
	Eyes - Mild irritant	Rabbit	-	870 Micrograms	-
	Eyes - Severe irritant	Rabbit	-	24 hours 2 milligrams	-
	Skin - Mild irritant	Pig	-	24 hours 250 microliters	-
	Skin - Mild irritant	Rabbit	-	435 milligrams	-
	Skin - Moderate irritant	Rabbit	-	24 hours 20 milligrams	-
	Skin - Moderate irritant	Rabbit	-	500 milligrams	-

Conclusion/Summary : Not available.

Sensitizer

Conclusion/Summary : Not available.

Carcinogenicity

Conclusion/Summary : Not available.

Classification

Product/ingredient name	ACGIH	IARC	EPA	NIOSH	NTP	OSHA
n-butyl acetate	A4	-	-	None.	-	-
toluene	A4	-	-	None.	-	-

Mutagenicity

Conclusion/Summary : Not available.

Teratogenicity

Conclusion/Summary : Not available.

Reproductive toxicity

Conclusion/Summary : Not available.

Section 12. Ecological information

Environmental effects : No known significant effects or critical hazards.

Aquatic ecotoxicity : Not available.

Biodegradability : Not available.

:

Other adverse effects : No known significant effects or critical hazards.

Ecotoxicological data for one or more components are known and will be made available on request.

Section 13. Disposal considerations

Waste disposal : The generation of waste should be avoided or minimized wherever possible. Significant quantities of waste product residues should not be disposed of via the foul sewer but processed in a suitable effluent treatment plant. Dispose of surplus and non-recyclable products via a licensed waste disposal contractor. Disposal of this product, solutions and any by-products should at all times comply with the requirements of environmental protection and waste disposal legislation and any regional local authority requirements. Waste packaging should be recycled. Incineration or landfill should only be considered when recycling is not feasible. This material and its container must be disposed of in a safe way. Care should be taken when handling emptied containers that have not been cleaned or rinsed out. Empty containers or liners may retain some product residues. Vapor from product residues may create a highly flammable or explosive atmosphere inside the container. Do not cut, weld or grind used containers unless they have been cleaned thoroughly internally. Avoid dispersal of spilled material and runoff and contact with soil, waterways, drains and sewers.

Disposal should be in accordance with applicable regional, national and local laws and regulations.

Refer to Section 7: HANDLING AND STORAGE and Section 8: EXPOSURE CONTROLS/PERSONAL PROTECTION for additional handling information and protection of employees.

Section 14. Transport information

Consult your shipping specialist or supplier for appropriate assignment of the DOT information.

Section 15. Regulatory information

United States

OSHA/HCS status : This material is considered hazardous by the OSHA Hazard Communication Standard (29 CFR 1910.1200).

United States inventory (TSCA 8b) : All components are listed or exempted.

SARA 313

Form R - Reporting requirements :

Product name	CAS number	Concentration
toluene	108-88-3	18.20

California Prop. 65 : WARNING: This product contains chemicals known to the State of California to cause cancer and birth defects or other reproductive harm.

Canada

WHMIS (Canada) : Class B-2: Flammable liquid
Class D-1B: Material causing immediate and serious toxic effects (Toxic).
Class D-2A: Material causing other toxic effects (Very toxic).
Class D-2B: Material causing other toxic effects (Toxic).

Canada inventory : All components are listed or exempted.

EU regulations

Hazard symbol or symbols :

Hazard symbol or symbols : Not available.

Section 15. Regulatory information

Risk phrases

R10- Flammable.
R63- Possible risk of harm to the unborn child.
R48/20- Harmful: danger of serious damage to health by prolonged exposure through inhalation.
R66- Repeated exposure may cause skin dryness or cracking.
R67- Vapors may cause drowsiness and dizziness.

Safety phrases : S36/37- Wear suitable protective clothing and gloves.

International regulations

International lists : **Australia inventory (AICS)**: All components are listed or exempted.
China inventory (IECSC): All components are listed or exempted.
Japan inventory: All components are listed or exempted.
Korea inventory: All components are listed or exempted.
New Zealand Inventory of Chemicals (NZIoC): All components are listed or exempted.
Philippines inventory (PICCS): All components are listed or exempted.

Section 16. Other information

Notice to reader

To the best of our knowledge, the information contained herein is accurate. However, neither the above-named supplier, nor any of its subsidiaries, assumes any liability whatsoever for the accuracy or completeness of the information contained herein.
Final determination of suitability of any material is the sole responsibility of the user. All materials may present unknown hazards and should be used with caution. Although certain hazards are described herein, we cannot guarantee that these are the only hazards that exist.

SAFETY DATA SHEET

U99 Reducer

Section 1. Identification

GHS product identifier : **U99 Reducer**
Other means of identification :

Relevant identified uses of the substance or mixture and uses advised against
: FOR INDUSTRIAL USE ONLY

Supplier/Manufacturer : Akzo Nobel Coatings, Inc.
1845 Maxwell
Troy, MI, 48084
USA
(800) 618-1010

Canadian Supplier : Akzo Nobel Coatings Ltd.
110 Woodbine Downs Blvd.
Unit #4 Etobicoke, Ontario
Canada M9W 5S6
+1 (800) 618-1010

Emergency telephone number : CHEMTREC +1 (800) 424-9300 (Inside the US)
CHEMTREC International +1 (703) 527-3887 (Outside the US, collect calls accepted)

Date of issue / Date of revision : 22 January 2016
Safety Data Sheet Version : 16.14
Date of printing : 22 January 2016

Akzo Nobel Coatings Inc. encourages and expects you to read and understand this entire MSDS, as there is important information throughout the document. Further, Akzo Nobel Coatings Inc. expects you to follow the precautions identified in this document unless your use conditions would necessitate other appropriate methods or actions.

To promote safe handling, each customer or recipient should: 1) Notify its employees, agents, contractors, and others whom it knows or believes will use this material of the information contained in this MSDS and any other information regarding hazards and safety; 2) Furnish this same information to each of its customers for the product; 3) Request its customers to notify their employees, customers, and other users of the product of this information; and 4) Notify its employees, agents, contractors, and others that the precautions identified for this product and any other products with which mixtures may be created are transferable and cumulative to the mixture.

Section 2. Hazards identification

OSHA/HCS status : This material is considered hazardous by the OSHA Hazard Communication Standard (29 CFR 1910.1200).

Classification of the substance or mixture : FLAMMABLE LIQUIDS - Category 3
ACUTE TOXICITY (inhalation) - Category 4
SERIOUS EYE DAMAGE/ EYE IRRITATION - Category 2A
SPECIFIC TARGET ORGAN TOXICITY (REPEATED EXPOSURE) - Category 1

GHS label elements

Section 2. Hazards identification

Hazard pictograms :

Signal word : Danger

Hazard statements : Flammable liquid and vapour.
Harmful if inhaled.
Causes serious eye irritation.
Causes damage to organs through prolonged or repeated exposure.

Precautionary statements

Prevention : Wear protective gloves. Wear eye or face protection. Keep away from heat, hot surfaces, sparks, open flames and other ignition sources. No smoking. Use explosion-proof electrical, ventilating, lighting and all material-handling equipment. Use only non-sparking tools. Take precautionary measures against static discharge. Keep container tightly closed. Use only outdoors or in a well-ventilated area. Do not breathe vapor. Do not eat, drink or smoke when using this product. Wash hands thoroughly after handling.

Response : Get medical attention if you feel unwell. IF INHALED: Remove person to fresh air and keep comfortable for breathing. Call a POISON CENTER or physician if you feel unwell. IF ON SKIN (or hair): Take off immediately all contaminated clothing. Rinse skin with water or shower. IF IN EYES: Rinse cautiously with water for several minutes. Remove contact lenses, if present and easy to do. Continue rinsing. If eye irritation persists: Get medical attention.

Storage : Store in a well-ventilated place. Keep cool.

Disposal : Dispose of contents and container in accordance with all local, regional, national and international regulations.

Hazards not otherwise classified : None known.

Section 3. Composition/information on ingredients

Substance/mixture : Mixture

Ingredient name	%	CAS number
2-butoxyethyl acetate	45 - 50	112-07-2
heptan-2-one	20 - 25	110-43-0
5-methylhexan-2-one	10 - 15	110-12-3
n-butyl acetate	1 - 5	123-86-4
benzoic acid	1 - 5	65-85-0

Any concentration shown as a range is to protect confidentiality or is due to batch variation.

There are no additional ingredients present which, within the current knowledge of the supplier and in the concentrations applicable, are classified as hazardous to health or the environment and hence require reporting in this section.

Occupational exposure limits, if available, are listed in Section 8.

Section 4. First aid measures

Description of necessary first aid measures

Eye contact : Immediately flush eyes with plenty of water, occasionally lifting the upper and lower eyelids. Check for and remove any contact lenses. Continue to rinse for at least 10 minutes. Get medical attention.

Inhalation : Remove victim to fresh air and keep at rest in a position comfortable for breathing. If it is suspected that fumes are still present, the rescuer should wear an appropriate mask or self-contained breathing apparatus. If not breathing, if breathing is irregular or if respiratory arrest occurs, provide artificial respiration or oxygen by trained personnel. It may be dangerous to the person providing aid to give mouth-to-mouth resuscitation. Get medical attention following exposure or if feeling unwell. If necessary, call a poison center or physician. If unconscious, place in recovery position and get medical attention immediately. Maintain an open airway. Loosen tight clothing such as a collar, tie, belt or waistband.

Skin contact : Flush contaminated skin with plenty of water. Remove contaminated clothing and shoes. Continue to rinse for at least 10 minutes. Get medical attention following exposure or if feeling unwell. Wash clothing before reuse. Clean shoes thoroughly before reuse.

Ingestion : Wash out mouth with water. Remove dentures if any. Remove victim to fresh air and keep at rest in a position comfortable for breathing. If material has been swallowed and the exposed person is conscious, give small quantities of water to drink. Stop if the exposed person feels sick as vomiting may be dangerous. Do not induce vomiting unless directed to do so by medical personnel. If vomiting occurs, the head should be kept low so that vomit does not enter the lungs. Get medical attention following exposure or if feeling unwell. Never give anything by mouth to an unconscious person. If unconscious, place in recovery position and get medical attention immediately. Maintain an open airway. Loosen tight clothing such as a collar, tie, belt or waistband.

Most important symptoms/effects, acute and delayed

Potential acute health effects

Eye contact : Causes serious eye irritation.

Inhalation : Harmful if inhaled.

Skin contact : No known significant effects or critical hazards.

Ingestion : No known significant effects or critical hazards.

Over-exposure signs/symptoms

Eye contact : Adverse symptoms may include the following:
pain or irritation
watering
redness

Inhalation : No specific data.

Skin contact : No specific data.

Ingestion : No specific data.

Indication of immediate medical attention and special treatment needed, if necessary

Notes to physician : Treat symptomatically. Contact poison treatment specialist immediately if large quantities have been ingested or inhaled.

Specific treatments : No specific treatment.

Section 4. First aid measures

Protection of first-aiders : No action shall be taken involving any personal risk or without suitable training. If it is suspected that fumes are still present, the rescuer should wear an appropriate mask or self-contained breathing apparatus. It may be dangerous to the person providing aid to give mouth-to-mouth resuscitation.

See toxicological information (Section 11)

Section 5. Fire-fighting measures

Extinguishing media

Suitable extinguishing media : Use dry chemical, CO_2, water spray (fog) or foam.

Unsuitable extinguishing media : Do not use water jet.

Specific hazards arising from the chemical : Flammable liquid and vapour. In a fire or if heated, a pressure increase will occur and the container may burst, with the risk of a subsequent explosion. Runoff to sewer may create fire or explosion hazard.

Hazardous thermal decomposition products : Decomposition products may include the following materials:
carbon dioxide
carbon monoxide

Special protective actions for fire-fighters : Promptly isolate the scene by removing all persons from the vicinity of the incident if there is a fire. No action shall be taken involving any personal risk or without suitable training. Move containers from fire area if this can be done without risk. Use water spray to keep fire-exposed containers cool.

Special protective equipment for fire-fighters : Fire-fighters should wear appropriate protective equipment and self-contained breathing apparatus (SCBA) with a full face-piece operated in positive pressure mode.

Section 6. Accidental release measures

Personal precautions, protective equipment and emergency procedures

For non-emergency personnel : No action shall be taken involving any personal risk or without suitable training. Evacuate surrounding areas. Keep unnecessary and unprotected personnel from entering. Do not touch or walk through spilled material. Shut off all ignition sources. No flares, smoking or flames in hazard area. Avoid breathing vapor or mist. Provide adequate ventilation. Wear appropriate respirator when ventilation is inadequate. Put on appropriate personal protective equipment.

For emergency responders : If specialised clothing is required to deal with the spillage, take note of any information in Section 8 on suitable and unsuitable materials. See also the information in "For non-emergency personnel".

Environmental precautions : Avoid dispersal of spilled material and runoff and contact with soil, waterways, drains and sewers. Inform the relevant authorities if the product has caused environmental pollution (sewers, waterways, soil or air).

Methods and materials for containment and cleaning up

Section 6. Accidental release measures

Small spill : Stop leak if without risk. Move containers from spill area. Use spark-proof tools and explosion-proof equipment. Dilute with water and mop up if water-soluble. Alternatively, or if water-insoluble, absorb with an inert dry material and place in an appropriate waste disposal container. Dispose of via a licensed waste disposal contractor.

Large spill : Stop leak if without risk. Move containers from spill area. Use spark-proof tools and explosion-proof equipment. Approach release from upwind. Prevent entry into sewers, water courses, basements or confined areas. Wash spillages into an effluent treatment plant or proceed as follows. Contain and collect spillage with non-combustible, absorbent material e.g. sand, earth, vermiculite or diatomaceous earth and place in container for disposal according to local regulations (see Section 13). Dispose of via a licensed waste disposal contractor. Contaminated absorbent material may pose the same hazard as the spilled product. Note: see Section 1 for emergency contact information and Section 13 for waste disposal.

Section 7. Handling and storage

Precautions for safe handling

Protective measures : Put on appropriate personal protective equipment (see Section 8). Do not breathe vapor or mist. Do not ingest. Avoid contact with eyes, skin and clothing. Use only with adequate ventilation. Wear appropriate respirator when ventilation is inadequate. Do not enter storage areas and confined spaces unless adequately ventilated. Keep in the original container or an approved alternative made from a compatible material, kept tightly closed when not in use. Store and use away from heat, sparks, open flame or any other ignition source. Use explosion-proof electrical (ventilating, lighting and material handling) equipment. Use only non-sparking tools. Take precautionary measures against electrostatic discharges. Empty containers retain product residue and can be hazardous. Do not reuse container.

Advice on general occupational hygiene : Eating, drinking and smoking should be prohibited in areas where this material is handled, stored and processed. Workers should wash hands and face before eating, drinking and smoking. Remove contaminated clothing and protective equipment before entering eating areas. See also Section 8 for additional information on hygiene measures.

Conditions for safe storage, including any incompatibilities : Store in accordance with local regulations. Store in a segregated and approved area. Store in original container protected from direct sunlight in a dry, cool and well-ventilated area, away from incompatible materials (see Section 10) and food and drink. Eliminate all ignition sources. Separate from oxidizing materials. Keep container tightly closed and sealed until ready for use. Containers that have been opened must be carefully resealed and kept upright to prevent leakage. Do not store in unlabeled containers. Use appropriate containment to avoid environmental contamination.

Section 8. Exposure controls/personal protection

Control parameters

Occupational exposure limits

Section 8. Exposure controls/personal protection

Ingredient name	Exposure limits
2-butoxyethyl acetate	**ACGIH TLV (United States, 3/2015).** TWA: 20 ppm 8 hours. **NIOSH REL (United States, 10/2013).** TWA: 33 mg/m³ 10 hours. TWA: 5 ppm 10 hours.
heptan-2-one	**ACGIH TLV (United States, 3/2015).** TWA: 233 mg/m³ 8 hours. TWA: 50 ppm 8 hours. **NIOSH REL (United States, 10/2013).** TWA: 465 mg/m³ 10 hours. TWA: 100 ppm 10 hours. **OSHA PEL (United States, 2/2013).** TWA: 465 mg/m³ 8 hours. TWA: 100 ppm 8 hours.
5-methylhexan-2-one	**ACGIH TLV (United States, 3/2015).** TWA: 93 mg/m³ 8 hours. TWA: 20 ppm 8 hours. STEL: 50 ppm 15 minutes. STEL: 234 mg/m³ 15 minutes. **NIOSH REL (United States, 10/2013).** TWA: 240 mg/m³ 10 hours. TWA: 50 ppm 10 hours. **OSHA PEL (United States, 2/2013).** TWA: 475 mg/m³ 8 hours. TWA: 100 ppm 8 hours.
n-butyl acetate	**ACGIH TLV (United States, 3/2015).** STEL: 200 ppm 15 minutes. TWA: 150 ppm 8 hours. **NIOSH REL (United States, 10/2013).** STEL: 950 mg/m³ 15 minutes. STEL: 200 ppm 15 minutes. TWA: 710 mg/m³ 10 hours. TWA: 150 ppm 10 hours. **OSHA PEL (United States, 2/2013).** TWA: 710 mg/m³ 8 hours. TWA: 150 ppm 8 hours.
benzoic acid	None.

Appropriate engineering controls : Use only with adequate ventilation. Use process enclosures, local exhaust ventilation or other engineering controls to keep worker exposure to airborne contaminants below any recommended or statutory limits. The engineering controls also need to keep gas, vapor or dust concentrations below any lower explosive limits. Use explosion-proof ventilation equipment.

Environmental exposure controls : Emissions from ventilation or work process equipment should be checked to ensure they comply with the requirements of environmental protection legislation. In some cases, fume scrubbers, filters or engineering modifications to the process equipment will be necessary to reduce emissions to acceptable levels.

Individual protection measures

Section 8. Exposure controls/personal protection

Hygiene measures : Wash hands, forearms and face thoroughly after handling chemical products, before eating, smoking and using the lavatory and at the end of the working period. Appropriate techniques should be used to remove potentially contaminated clothing. Wash contaminated clothing before reusing. Ensure that eyewash stations and safety showers are close to the workstation location.

Eye/face protection : Safety eyewear complying with an approved standard should be used when a risk assessment indicates this is necessary to avoid exposure to liquid splashes, mists, gases or dusts. If contact is possible, the following protection should be worn, unless the assessment indicates a higher degree of protection: chemical splash goggles.

Skin protection

Hand protection : Chemical-resistant, impervious gloves complying with an approved standard should be worn at all times when handling chemical products if a risk assessment indicates this is necessary. Considering the parameters specified by the glove manufacturer, check during use that the gloves are still retaining their protective properties. It should be noted that the time to breakthrough for any glove material may be different for different glove manufacturers. In the case of mixtures, consisting of several substances, the protection time of the gloves cannot be accurately estimated.

Body protection : Personal protective equipment for the body should be selected based on the task being performed and the risks involved and should be approved by a specialist before handling this product. When there is a risk of ignition from static electricity, wear anti-static protective clothing. For the greatest protection from static discharges, clothing should include anti-static overalls, boots and gloves.

Other skin protection : Appropriate footwear and any additional skin protection measures should be selected based on the task being performed and the risks involved and should be approved by a specialist before handling this product.

Respiratory protection : Use a properly fitted, air-purifying or air-fed respirator complying with an approved standard if a risk assessment indicates this is necessary. Respirator selection must be based on known or anticipated exposure levels, the hazards of the product and the safe working limits of the selected respirator.

Section 9. Physical and chemical properties

Appearance

Physical state : Liquid.

Color : Not available.

Odor : NOT AVAILABLE. (CAPITAL-PERIOD)

Odor threshold : Not available.

pH : Not available.

Melting/freezing point : Not available.

Boiling point : 126°C (258.8°F)

boiling range : Not available.

Flash point : Closed cup: 25°C (77°F)

Evaporation rate : Not available.

Flammability (solid, gas) : Not available.

Upper/lower flammability or explosive limits

Upper: : Not determined.

Lower: : Not determined.

Vapor pressure : Not available.

Section 9. Physical and chemical properties

Vapor density	:	Not available.
Relative density	:	0.907
Density	:	7.57 lbs/gal 0.907 g/cm³
Solubility	:	Not available.
Solubility in water	:	Not available.
Partition coefficient: n-octanol/water	:	Not available.
Auto-ignition temperature	:	Not available.
Decomposition temperature	:	Not available.
Viscosity	:	Kinematic (room temperature): 0.22 cm^2/s (22 cSt) Kinematic (40°C (104°F)): 0.07 cm^2/s (7 cSt)
Weight Volatiles	:	84.54% (w/w)
Volume Volatiles	:	87.37 %(v/v)
Weight Solids	:	15.46 %(w/w)
Volume Solids	:	12.63 %(v/v)
Regulatory VOC	:	6.4 lbs/gal (767 g/l) minus water and exempt solvents

Section 10. Stability and reactivity

Reactivity	:	No specific test data related to reactivity available for this product or its ingredients.
Chemical stability	:	The product is stable.
Possibility of hazardous reactions	:	Under normal conditions of storage and use, hazardous reactions will not occur.
Conditions to avoid	:	Avoid all possible sources of ignition (spark or flame). Do not pressurize, cut, weld, braze, solder, drill, grind or expose containers to heat or sources of ignition.
Incompatible materials	:	Reactive or incompatible with the following materials: oxidizing materials
Hazardous decomposition products	:	Under normal conditions of storage and use, hazardous decomposition products should not be produced.

Section 11. Toxicological information

Information on toxicological effects

Acute toxicity

Section 11. Toxicological information

Product/ingredient name	Result	Species	Dose	Exposure
2-butoxyethyl acetate	LD50 Dermal	Rabbit	1500 mg/kg	-
	LD50 Oral	Rat	2400 mg/kg	-
heptan-2-one	LD50 Oral	Rat	1600 mg/kg	-
5-methylhexan-2-one	LD50 Oral	Rat	3200 mg/kg	-
n-butyl acetate	LC50 Inhalation Vapor	Rat	390 ppm	4 hours
	LD50 Dermal	Rabbit	>17600 mg/kg	-
	LD50 Oral	Rat	10768 mg/kg	-
benzoic acid	LD50 Oral	Rat - Male	1700 mg/kg	-

Irritation/Corrosion

Product/ingredient name	Result	Species	Score	Exposure	Observation
2-butoxyethyl acetate	Eyes - Mild irritant	Rabbit	-	24 hours 500 milligrams	-
	Skin - Mild irritant	Rabbit	-	500 milligrams	-
heptan-2-one	Skin - Mild irritant	Rabbit	-	24 hours 14 milligrams	-
5-methylhexan-2-one	Eyes - Mild irritant	Rabbit	-	24 hours 100 microliters	-
n-butyl acetate	Eyes - Moderate irritant	Rabbit	-	100 milligrams	-
	Skin - Moderate irritant	Rabbit	-	24 hours 500 milligrams	-
benzoic acid	Skin - Mild irritant	Human	-	40 minutes 0. 76 Percent	-
	Skin - Moderate irritant	Human	-	72 hours 22 milligrams Intermittent	-

Sensitization

Not available.

Mutagenicity

Not available.

Carcinogenicity

Not available.

Reproductive toxicity

Not available.

Teratogenicity

Not available.

Specific target organ toxicity (single exposure)

Name	Category	Route of exposure	Target organs
n-butyl acetate	Category 3	Not applicable.	Narcotic effects

Specific target organ toxicity (repeated exposure)

Section 11. Toxicological information

Name	Category	Route of exposure	Target organs
benzoic acid	Category 1	Inhalation	Not determined

Aspiration hazard

Not available.

Information on the likely routes of exposure : Not available.

Potential acute health effects

Eye contact : Causes serious eye irritation.

Inhalation : Harmful if inhaled.

Skin contact : No known significant effects or critical hazards.

Ingestion : No known significant effects or critical hazards.

Symptoms related to the physical, chemical and toxicological characteristics

Eye contact : Adverse symptoms may include the following:
pain or irritation
watering
redness

Inhalation : No specific data.

Skin contact : No specific data.

Ingestion : No specific data.

Delayed and immediate effects and also chronic effects from short and long term exposure

Short term exposure

Potential immediate effects : Not available.

Potential delayed effects : Not available.

Long term exposure

Potential immediate effects : Not available.

Potential delayed effects : Not available.

Potential chronic health effects

Not available.

General : Causes damage to organs through prolonged or repeated exposure.

Carcinogenicity : No known significant effects or critical hazards.

Mutagenicity : No known significant effects or critical hazards.

Teratogenicity : No known significant effects or critical hazards.

Developmental effects : No known significant effects or critical hazards.

Fertility effects : No known significant effects or critical hazards.

Numerical measures of toxicity

Section 11. Toxicological information

Acute toxicity estimates

Route	ATE value
Oral	2229.2 mg/kg
Dermal	2848.1 mg/kg
Inhalation (gases)	4695 ppm
Inhalation (vapors)	11.48 mg/l
Inhalation (dusts and mists)	1.565 mg/l

Section 12. Ecological information

Toxicity

Product/ingredient name	Result	Species	Exposure
heptan-2-one	Acute LC50 131000 to 137000 µg/l Fresh water	Fish - Pimephales promelas	96 hours
5-methylhexan-2-one	Acute LC50 159000 µg/l Fresh water	Fish - Pimephales promelas	96 hours
n-butyl acetate	Acute LC50 32000 µg/l Marine water	Crustaceans - Artemia salina - Nauplii	48 hours
	Acute LC50 62000 µg/l	Fish - Danio rerio	96 hours
benzoic acid	Acute EC50 860 mg/l Fresh water	Daphnia - Daphnia magna - Neonate	48 hours
	Acute LC50 180 ppm Fresh water	Fish - Gambusia affinis - Adult	96 hours

Persistence and degradability

Not available.

Bioaccumulative potential

Product/ingredient name	$LogP_{ow}$	BCF	Potential
2-butoxyethyl acetate	1.51	-	low
heptan-2-one	2.26	-	low
5-methylhexan-2-one	1.88	-	low
n-butyl acetate	2.3	-	low
benzoic acid	1.88	-	low

Mobility in soil

Soil/water partition coefficient (K_{oc}) : Not available.

Other adverse effects : No known significant effects or critical hazards.

Section 13. Disposal considerations

Disposal methods : The generation of waste should be avoided or minimized wherever possible. Disposal of this product, solutions and any by-products should at all times comply with the requirements of environmental protection and waste disposal legislation and any regional local authority requirements. Dispose of surplus and non-recyclable products via a licensed waste disposal contractor. Waste should not be disposed of untreated to the sewer unless fully compliant with the requirements of all authorities with jurisdiction. Waste packaging should be recycled. Incineration or landfill should only be considered when recycling is not feasible. This material and its container must be disposed of in a safe way. Care should be taken when handling emptied containers that have not been cleaned or rinsed out. Empty containers or liners may retain some product residues. Vapor from product residues may create a highly flammable or explosive atmosphere inside the container. Do not cut, weld or grind used containers unless they have been cleaned thoroughly internally. Avoid dispersal of spilled material and runoff and contact with soil, waterways, drains and sewers.

Section 14. Transport information

Special precautions for user : The actual shipping description for this product may vary based several factors including, but not limited to, the volume of material, size of the container, mode of transport and use of exemptions or exceptions found in the applicable regulations. The information provided in Section 14 is one possible shipping description for this product. Consult your shipping specialist or supplier for appropriate assignment of the DOT information.

Transport within user's premises: always transport in closed containers that are upright and secure. Ensure that persons transporting the product know what to do in the event of an accident or spillage.

	DOT Classification	TDG Classification	Mexico Classification	IMDG	IATA
UN number	UN1263	UN1263	UN1263	UN1263	UN1263
UN proper shipping name	PAINT RELATED MATERIAL	PAINT RELATED MATERIAL	PAINT RELATED MATERIAL	PAINT RELATED MATERIAL	PAINT RELATED MATERIAL
Transport hazard class(es)	3	3	3	3	3
Packing group	III	III	III	III	III
Environmental hazards	No.	No.	No.	No.	No.

Section 15. Regulatory information

U.S. Federal regulations

United States inventory (TSCA 8b): All components are listed or exempted.

SARA 311/312

Classification : Fire hazard
Immediate (acute) health hazard
Delayed (chronic) health hazard

SARA 313

	Product name	CAS number	%
Form R - Reporting requirements	2-butoxyethyl acetate	112-07-2	45 - 50

SARA 313 notifications must not be detached from the SDS and any copying and redistribution of the SDS shall include copying and redistribution of the notice attached to copies of the SDS subsequently redistributed.

International lists

National inventory

Australia : All components are listed or exempted.
Canada : All components are listed or exempted.
China : All components are listed or exempted.
Europe : All components are listed or exempted.
Japan : All components are listed or exempted.
Malaysia : At least one component is not listed.
New Zealand : All components are listed or exempted.
Philippines : All components are listed or exempted.
Republic of Korea : All components are listed or exempted.
Taiwan : At least one component is not listed.

Section 16. Other information

Hazardous Material Information System (U.S.A.)

Health	*	2
Flammability		3
Physical hazards		0

Caution: HMIS® ratings are based on a 0-4 rating scale, with 0 representing minimal hazards or risks, and 4 representing significant hazards or risks Although HMIS® ratings are not required on SDSs under 29 CFR 1910.1200, the preparer may choose to provide them. HMIS® ratings are to be used with a fully implemented HMIS® program. HMIS® is a registered mark of the National Paint & Coatings Association (NPCA). HMIS® materials may be purchased exclusively from J. J. Keller (800) 327-6868.

The customer is responsible for determining the PPE code for this material.

National Fire Protection Association (U.S.A.)

Section 16. Other information

Reprinted with permission from NFPA 704-2001, Identification of the Hazards of Materials for Emergency Response Copyright ©1997, National Fire Protection Association, Quincy, MA 02269. This reprinted material is not the complete and official position of the National Fire Protection Association, on the referenced subject which is represented only by the standard in its entirety.

Copyright ©2001, National Fire Protection Association, Quincy, MA 02269. This warning system is intended to be interpreted and applied only by properly trained individuals to identify fire, health and reactivity hazards of chemicals. The user is referred to certain limited number of chemicals with recommended classifications in NFPA 49 and NFPA 325, which would be used as a guideline only. Whether the chemicals are classified by NFPA or not, anyone using the 704 systems to classify chemicals does so at their own risk.

History

Date of issue/Date of revision	:	22 January 2016
Version	:	16.14
MSDS #	:	R29025 0003
Key to abbreviations	:	ATE = Acute Toxicity Estimate BCF = Bioconcentration Factor GHS = Globally Harmonized System of Classification and Labelling of Chemicals IATA = International Air Transport Association IBC = Intermediate Bulk Container IMDG = International Maritime Dangerous Goods LogPow = logarithm of the octanol/water partition coefficient MARPOL 73/78 = International Convention for the Prevention of Pollution From Ships, 1973 as modified by the Protocol of 1978. ("Marpol" = marine pollution) UN = United Nations

Notice to reader

To the best of our knowledge, the information contained herein is accurate. However, neither the above-named supplier, nor any of its subsidiaries, assumes any liability whatsoever for the accuracy or completeness of the information contained herein.
Final determination of suitability of any material is the sole responsibility of the user. All materials may present unknown hazards and should be used with caution. Although certain hazards are described herein, we cannot guarantee that these are the only hazards that exist.

SAFETY DATA SHEET

U280 / U350 Hardener

Section 1. Identification

GHS product identifier : **U280 / U350 Hardener**
Other means of identification :

Relevant identified uses of the substance or mixture and uses advised against
: FOR INDUSTRIAL USE ONLY

Supplier/Manufacturer : Akzo Nobel Coatings, Inc.
1845 Maxwell
Troy, MI, 48084
USA
(800) 618-1010

Canadian Supplier : Akzo Nobel Coatings Ltd.
110 Woodbine Downs Blvd.
Unit #4 Etobicoke, Ontario
Canada M9W 5S6
+1 (800) 618-1010

Emergency telephone number : CHEMTREC +1 (800) 424-9300 (Inside the US)
CHEMTREC International +1 (703) 527-3887 (Outside the US, collect calls accepted)

Date of issue / Date of revision : 20 October 2015
Safety Data Sheet Version : 16.01
Date of printing : 20 October 2015

Akzo Nobel Coatings Inc. encourages and expects you to read and understand this entire MSDS, as there is important information throughout the document. Further, Akzo Nobel Coatings Inc. expects you to follow the precautions identified in this document unless your use conditions would necessitate other appropriate methods or actions.

To promote safe handling, each customer or recipient should: 1) Notify its employees, agents, contractors, and others whom it knows or believes will use this material of the information contained in this MSDS and any other information regarding hazards and safety; 2) Furnish this same information to each of its customers for the product; 3) Request its customers to notify their employees, customers, and other users of the product of this information; and 4) Notify its employees, agents, contractors, and others that the precautions identified for this product and any other products with which mixtures may be created are transferable and cumulative to the mixture.

Section 2. Hazards identification

OSHA/HCS status :

Classification of the substance or mixture : FLAMMABLE LIQUIDS - Category 3
ACUTE TOXICITY: INHALATION - Category 4
SKIN CORROSION/IRRITATION - Category 2
SERIOUS EYE DAMAGE/ EYE IRRITATION - Category 2A
RESPIRATORY SENSITIZATION - Category 1
SKIN SENSITIZATION - Category 1
SPECIFIC TARGET ORGAN TOXICITY (SINGLE EXPOSURE) [Respiratory tract irritation] - Category 3

Section 2. Hazards identification

GHS label elements

Hazard pictograms :

Signal word :

Hazard statements :

Precautionary statements

Prevention :

Response :

Storage :

Disposal :

Supplemental label elements :

Hazards not otherwise classified :

Section 3. Composition/information on ingredients

Substance/mixture : Mixture

There are no ingredients present which, within the current knowledge of the supplier and in the concentrations applicable, are classified as hazardous to health or the environment and hence require reporting in this section.

Occupational exposure limits, if available, are listed in Section 8.

Section 4. First aid measures

Description of necessary first aid measures

Eye contact :

Inhalation :

Skin contact :

Ingestion :

Most important symptoms/effects, acute and delayed

Potential acute health effects

Eye contact :

Inhalation :

Skin contact :

Ingestion :

Over-exposure signs/symptoms

Eye contact :

Inhalation :

Skin contact :

Section 4. First aid measures

Ingestion :

Indication of immediate medical attention and special treatment needed, if necessary

Notes to physician :

Specific treatments :

Protection of first-aiders :

See toxicological information (Section 11)

Section 5. Fire-fighting measures

Extinguishing media

Suitable extinguishing media :

Unsuitable extinguishing media :

Specific hazards arising from the chemical :

Hazardous thermal decomposition products :

Special protective actions for fire-fighters :

Special protective equipment for fire-fighters :

Section 6. Accidental release measures

Personal precautions, protective equipment and emergency procedures

For non-emergency personnel :

For emergency responders :

Environmental precautions :

Methods and materials for containment and cleaning up

Small spill :

Large spill :

Section 7. Handling and storage

Precautions for safe handling

Protective measures :

Advice on general occupational hygiene :

Conditions for safe storage, including any incompatibilities :

Section 8. Exposure controls/personal protection

Control parameters

Occupational exposure limits

None.

Appropriate engineering controls :

Environmental exposure controls :

Individual protection measures

Hygiene measures :

Eye/face protection :

Skin protection

Hand protection :

Body protection :

Other skin protection :

Respiratory protection :

Section 9. Physical and chemical properties

Appearance

Physical state : Liquid.

Color : Not available.

Odor : NOT AVAILABLE. (CAPITAL-PERIOD)

Odor threshold : Not available.

pH : Not available.

Melting/freezing point : Not available.

Boiling point : 139°C (282.2°F)

boiling range : Not available.

Flash point : Closed cup: 41°C (105.8°F)

Evaporation rate : Not available.

Flammability (solid, gas) : Not available.

Upper/lower flammability or explosive limits

Section 9. Physical and chemical properties

Upper:	: Not determined.
Lower:	: Not determined.
Vapor pressure	: Not available.
Vapor density	: Not available.
Relative density	: 1.23
Density	: 10.26 lbs/gal 1.23 g/cm³
Solubility	: Not available.
Solubility in water	: Not available.
Partition coefficient: n-octanol/water	: Not available.
Auto-ignition temperature	: Not available.
Decomposition temperature	: Not available.
Viscosity	: Kinematic (room temperature): 0.323829 cm^2/s (32.3829 cSt)
Weight Volatiles	: 42.69% (w/w)
Volume Volatiles	: 39.22 %(v/v)
Weight Solids	: 57.31 %(w/w)
Volume Solids	: 60.78 %(v/v)
Regulatory VOC	: 0 lbs/gal (0 g/l) minus water and exempt solvents

Section 10. Stability and reactivity

Reactivity	:
Chemical stability	:
Possibility of hazardous reactions	:
Conditions to avoid	:
Incompatible materials	:
Hazardous decomposition products	:

Section 11. Toxicological information

Information on toxicological effects

Acute toxicity

Not available.

Irritation/Corrosion

Not available.

Sensitization

Section 11. Toxicological information

Not available.

Mutagenicity

Not available.

Carcinogenicity

Not available.

Reproductive toxicity

Not available.

Teratogenicity

Not available.

Specific target organ toxicity (single exposure)

Not available.

Specific target organ toxicity (repeated exposure)

Not available.

Aspiration hazard

Not available.

Information on the likely routes of exposure : Not available.

Potential acute health effects

Eye contact :

Inhalation :

Skin contact :

Ingestion :

Symptoms related to the physical, chemical and toxicological characteristics

Eye contact :

Inhalation :

Skin contact :

Ingestion :

Delayed and immediate effects and also chronic effects from short and long term exposure

Short term exposure

Potential immediate effects : Not available.

Potential delayed effects : Not available.

Long term exposure

Potential immediate effects : Not available.

Potential delayed effects : Not available.

Potential chronic health effects

Section 11. Toxicological information

Not available.

General :

Carcinogenicity :

Mutagenicity :

Teratogenicity :

Developmental effects :

Fertility effects :

Numerical measures of toxicity

Acute toxicity estimates

Not available.

Section 12. Ecological information

Toxicity

Not available.

Persistence and degradability

Not available.

Bioaccumulative potential

Not available.

Mobility in soil

Soil/water partition coefficient (K_{OC}) : Not available.

Other adverse effects :

Section 13. Disposal considerations

Disposal methods :

Section 14. Transport information

Special precautions for user : The actual shipping description for this product may vary based several factors including, but not limited to, the volume of material, size of the container, mode of transport and use of exemptions or exceptions found in the applicable regulations. The information provided in Section 14 is one possible shipping description for this product. Consult your shipping specialist or supplier for appropriate assignment of the DOT information.

Section 14. Transport information

Transport within user's premises: always transport in closed containers that are upright and secure. Ensure that persons transporting the product know what to do in the event of an accident or spillage.

	DOT Classification	TDG Classification	Mexico Classification	IMDG	IATA
UN number	UN1263			UN1263	UN1263
UN proper shipping name	PAINT RELATED MATERIAL			PAINT RELATED MATERIAL	PAINT RELATED MATERIAL
Transport hazard class(es)	3			3	3
Packing group	III			III	III
Environmental hazards	No.			No.	No.

Section 15. Regulatory information

U.S. Federal regulations

United States inventory (TSCA 8b) : All components are listed or exempted.

SARA 311/312

Classification :

International lists

National inventory

Australia : All components are listed or exempted.
Canada : All components are listed or exempted.
China : All components are listed or exempted.
Europe : All components are listed or exempted.
Japan : All components are listed or exempted.
Malaysia : At least one component is not listed.
New Zealand : All components are listed or exempted.
Philippines : All components are listed or exempted.
Republic of Korea : All components are listed or exempted.
Taiwan : At least one component is not listed.

Section 16. Other information

Hazardous Material Information System (U.S.A.)

Health	*	2
Flammability		2
Physical hazards		0

Caution: HMIS® ratings are based on a 0-4 rating scale, with 0 representing minimal hazards or risks, and 4 representing significant hazards or risks Although HMIS® ratings are not required on SDSs under 29 CFR 1910.1200, the preparer may choose to provide them. HMIS® ratings are to be used with a fully implemented HMIS® program. HMIS® is a registered mark of the National Paint & Coatings Association (NPCA). HMIS® materials may be purchased exclusively from J. J. Keller (800) 327-6868.

The customer is responsible for determining the PPE code for this material.

National Fire Protection Association (U.S.A.)

Reprinted with permission from NFPA 704-2001, Identification of the Hazards of Materials for Emergency Response Copyright ©1997, National Fire Protection Association, Quincy, MA 02269. This reprinted material is not the complete and official position of the National Fire Protection Association, on the referenced subject which is represented only by the standard in its entirety.

Copyright ©2001, National Fire Protection Association, Quincy, MA 02269. This warning system is intended to be interpreted and applied only by properly trained individuals to identify fire, health and reactivity hazards of chemicals. The user is referred to certain limited number of chemicals with recommended classifications in NFPA 49 and NFPA 325, which would be used as a guideline only. Whether the chemicals are classified by NFPA or not, anyone using the 704 systems to classify chemicals does so at their own risk.

History

Date of issue/Date of revision : 20 October 2015

Version : 16.01

MSDS # : R62278
0002

Key to abbreviations : ATE = Acute Toxicity Estimate
BCF = Bioconcentration Factor
GHS = Globally Harmonized System of Classification and Labelling of Chemicals
IATA = International Air Transport Association
IBC = Intermediate Bulk Container
IMDG = International Maritime Dangerous Goods
LogPow = logarithm of the octanol/water partition coefficient
MARPOL 73/78 = International Convention for the Prevention of Pollution From Ships, 1973 as modified by the Protocol of 1978. ("Marpol" = marine pollution)
UN = United Nations

Notice to reader

Section 16. Other information

To the best of our knowledge, the information contained herein is accurate. However, neither the above-named supplier, nor any of its subsidiaries, assumes any liability whatsoever for the accuracy or completeness of the information contained herein.
Final determination of suitability of any material is the sole responsibility of the user. All materials may present unknown hazards and should be used with caution. Although certain hazards are described herein, we cannot guarantee that these are the only hazards that exist.

SAFETY DATA SHEET

U350 Binder

Section 1. Identification

GHS product identifier : **U350 Binder**
Other means of identification :

Relevant identified uses of the substance or mixture and uses advised against
: FOR INDUSTRIAL USE ONLY

Supplier/Manufacturer : Akzo Nobel Coatings, Inc.
1845 Maxwell
Troy, MI, 48084
USA
(800) 618-1010

Canadian Supplier : Akzo Nobel Coatings Ltd.
110 Woodbine Downs Blvd.
Unit #4 Etobicoke, Ontario
Canada M9W 5S6
+1 (800) 618-1010

Emergency telephone number : CHEMTREC +1 (800) 424-9300 (Inside the US)
CHEMTREC International +1 (703) 527-3887 (Outside the US, collect calls accepted)

Date of issue / Date of revision : 21 January 2016
Safety Data Sheet Version : 16.01
Date of printing : 21 January 2016

Akzo Nobel Coatings Inc. encourages and expects you to read and understand this entire MSDS, as there is important information throughout the document. Further, Akzo Nobel Coatings Inc. expects you to follow the precautions identified in this document unless your use conditions would necessitate other appropriate methods or actions.

To promote safe handling, each customer or recipient should: 1) Notify its employees, agents, contractors, and others whom it knows or believes will use this material of the information contained in this MSDS and any other information regarding hazards and safety; 2) Furnish this same information to each of its customers for the product; 3) Request its customers to notify their employees, customers, and other users of the product of this information; and 4) Notify its employees, agents, contractors, and others that the precautions identified for this product and any other products with which mixtures may be created are transferable and cumulative to the mixture.

Section 2. Hazards identification

OSHA/HCS status : This material is considered hazardous by the OSHA Hazard Communication Standard (29 CFR 1910.1200).

Classification of the substance or mixture : FLAMMABLE LIQUIDS - Category 2
ACUTE TOXICITY (inhalation) - Category 4
SKIN CORROSION/IRRITATION - Category 2
SERIOUS EYE DAMAGE/ EYE IRRITATION - Category 2A
SKIN SENSITIZATION - Category 1
CARCINOGENICITY - Category 2
SPECIFIC TARGET ORGAN TOXICITY (SINGLE EXPOSURE) (Narcotic effects) - Category 3

Section 2. Hazards identification

GHS label elements

Hazard pictograms :

Signal word : Danger

Hazard statements : Highly flammable liquid and vapor.
Harmful if inhaled.
Causes serious eye irritation.
Causes skin irritation.
May cause an allergic skin reaction.
Suspected of causing cancer.
May cause drowsiness or dizziness.

Precautionary statements

Prevention : Obtain special instructions before use. Do not handle until all safety precautions have been read and understood. Wear protective gloves. Wear eye or face protection. Wear protective clothing. Keep away from heat, hot surfaces, sparks, open flames and other ignition sources. No smoking. Use explosion-proof electrical, ventilating, lighting and all material-handling equipment. Use only non-sparking tools. Take precautionary measures against static discharge. Keep container tightly closed. Use only outdoors or in a well-ventilated area. Avoid breathing vapor. Wash hands thoroughly after handling. Contaminated work clothing must not be allowed out of the workplace.

Response : IF exposed or concerned: Get medical attention. IF INHALED: Remove person to fresh air and keep comfortable for breathing. Call a POISON CENTER or physician if you feel unwell. IF ON SKIN (or hair): Take off immediately all contaminated clothing. Rinse skin with water or shower. IF ON SKIN: Wash with plenty of soap and water. Wash contaminated clothing before reuse. If skin irritation or rash occurs: Get medical attention. IF IN EYES: Rinse cautiously with water for several minutes. Remove contact lenses, if present and easy to do. Continue rinsing. If eye irritation persists: Get medical attention.

Storage : Store locked up. Store in a well-ventilated place. Keep cool.

Disposal : Dispose of contents and container in accordance with all local, regional, national and international regulations.

Hazards not otherwise classified : None known.

Section 3. Composition/information on ingredients

Substance/mixture : Mixture

Ingredient name	%	CAS number
heptan-2-one	15 - 20	110-43-0
n-butyl acetate	10 - 15	123-86-4
acetone	10 - 15	67-64-1
4-methylpentan-2-one	5 - 10	108-10-1
4-chloro-α,α,α-trifluorotoluene	1 - 5	98-56-6
bis(1,2,2,6,6-pentamethyl-4-piperidyl) sebacate	0 - 1	41556-26-7
methyl 1,2,2,6,6-pentamethyl-4-piperidyl sebacate	0 - 1	82919-37-7

Section 3. Composition/information on ingredients

Any concentration shown as a range is to protect confidentiality or is due to batch variation.

There are no additional ingredients present which, within the current knowledge of the supplier and in the concentrations applicable, are classified as hazardous to health or the environment and hence require reporting in this section.

Occupational exposure limits, if available, are listed in Section 8.

Section 4. First aid measures

Description of necessary first aid measures

Eye contact : Immediately flush eyes with plenty of water, occasionally lifting the upper and lower eyelids. Check for and remove any contact lenses. Continue to rinse for at least 10 minutes. Get medical attention.

Inhalation : Remove victim to fresh air and keep at rest in a position comfortable for breathing. If it is suspected that fumes are still present, the rescuer should wear an appropriate mask or self-contained breathing apparatus. If not breathing, if breathing is irregular or if respiratory arrest occurs, provide artificial respiration or oxygen by trained personnel. It may be dangerous to the person providing aid to give mouth-to-mouth resuscitation. Get medical attention. If necessary, call a poison center or physician. If unconscious, place in recovery position and get medical attention immediately. Maintain an open airway. Loosen tight clothing such as a collar, tie, belt or waistband. In case of inhalation of decomposition products in a fire, symptoms may be delayed. The exposed person may need to be kept under medical surveillance for 48 hours.

Skin contact : Wash with plenty of soap and water. Remove contaminated clothing and shoes. Wash contaminated clothing thoroughly with water before removing it, or wear gloves. Continue to rinse for at least 10 minutes. Get medical attention. In the event of any complaints or symptoms, avoid further exposure. Wash clothing before reuse. Clean shoes thoroughly before reuse.

Ingestion : Wash out mouth with water. Remove dentures if any. Remove victim to fresh air and keep at rest in a position comfortable for breathing. If material has been swallowed and the exposed person is conscious, give small quantities of water to drink. Stop if the exposed person feels sick as vomiting may be dangerous. Do not induce vomiting unless directed to do so by medical personnel. If vomiting occurs, the head should be kept low so that vomit does not enter the lungs. Get medical attention. If necessary, call a poison center or physician. Never give anything by mouth to an unconscious person. If unconscious, place in recovery position and get medical attention immediately. Maintain an open airway. Loosen tight clothing such as a collar, tie, belt or waistband.

Most important symptoms/effects, acute and delayed

Potential acute health effects

Eye contact : Causes serious eye irritation.

Inhalation : Harmful if inhaled. Can cause central nervous system (CNS) depression. May cause drowsiness or dizziness.

Skin contact : Causes skin irritation. May cause an allergic skin reaction.

Ingestion : Can cause central nervous system (CNS) depression.

Over-exposure signs/symptoms

Eye contact : Adverse symptoms may include the following:
pain or irritation
watering
redness

Section 4. First aid measures

Inhalation : Adverse symptoms may include the following:
nausea or vomiting
headache
drowsiness/fatigue
dizziness/vertigo
unconsciousness

Skin contact : Adverse symptoms may include the following:
irritation
redness

Ingestion : No specific data.

Indication of immediate medical attention and special treatment needed, if necessary

Notes to physician : In case of inhalation of decomposition products in a fire, symptoms may be delayed. The exposed person may need to be kept under medical surveillance for 48 hours.

Specific treatments : No specific treatment.

Protection of first-aiders : No action shall be taken involving any personal risk or without suitable training. If it is suspected that fumes are still present, the rescuer should wear an appropriate mask or self-contained breathing apparatus. It may be dangerous to the person providing aid to give mouth-to-mouth resuscitation. Wash contaminated clothing thoroughly with water before removing it, or wear gloves.

See toxicological information (Section 11)

Section 5. Fire-fighting measures

Extinguishing media

Suitable extinguishing media : Use dry chemical, CO_2, water spray (fog) or foam.

Unsuitable extinguishing media : Do not use water jet.

Specific hazards arising from the chemical : Highly flammable liquid and vapor. In a fire or if heated, a pressure increase will occur and the container may burst, with the risk of a subsequent explosion. Runoff to sewer may create fire or explosion hazard.

Hazardous thermal decomposition products : Decomposition products may include the following materials:
carbon dioxide
carbon monoxide
halogenated compounds
carbonyl halides

Special protective actions for fire-fighters : Promptly isolate the scene by removing all persons from the vicinity of the incident if there is a fire. No action shall be taken involving any personal risk or without suitable training. Move containers from fire area if this can be done without risk. Use water spray to keep fire-exposed containers cool.

Special protective equipment for fire-fighters : Fire-fighters should wear appropriate protective equipment and self-contained breathing apparatus (SCBA) with a full face-piece operated in positive pressure mode.

Section 6. Accidental release measures

Personal precautions, protective equipment and emergency procedures

For non-emergency personnel : No action shall be taken involving any personal risk or without suitable training. Evacuate surrounding areas. Keep unnecessary and unprotected personnel from entering. Do not touch or walk through spilled material. Shut off all ignition sources. No flares, smoking or flames in hazard area. Avoid breathing vapor or mist. Provide adequate ventilation. Wear appropriate respirator when ventilation is inadequate. Put on appropriate personal protective equipment.

For emergency responders : If specialised clothing is required to deal with the spillage, take note of any information in Section 8 on suitable and unsuitable materials. See also the information in "For non-emergency personnel".

Environmental precautions : Avoid dispersal of spilled material and runoff and contact with soil, waterways, drains and sewers. Inform the relevant authorities if the product has caused environmental pollution (sewers, waterways, soil or air).

Methods and materials for containment and cleaning up

Small spill : Stop leak if without risk. Move containers from spill area. Use spark-proof tools and explosion-proof equipment. Dilute with water and mop up if water-soluble. Alternatively, or if water-insoluble, absorb with an inert dry material and place in an appropriate waste disposal container. Dispose of via a licensed waste disposal contractor.

Large spill : Stop leak if without risk. Move containers from spill area. Use spark-proof tools and explosion-proof equipment. Approach release from upwind. Prevent entry into sewers, water courses, basements or confined areas. Wash spillages into an effluent treatment plant or proceed as follows. Contain and collect spillage with non-combustible, absorbent material e.g. sand, earth, vermiculite or diatomaceous earth and place in container for disposal according to local regulations (see Section 13). Dispose of via a licensed waste disposal contractor. Contaminated absorbent material may pose the same hazard as the spilled product. Note: see Section 1 for emergency contact information and Section 13 for waste disposal.

Section 7. Handling and storage

Precautions for safe handling

Protective measures : Put on appropriate personal protective equipment (see Section 8). Persons with a history of skin sensitization problems should not be employed in any process in which this product is used. Avoid exposure - obtain special instructions before use. Do not handle until all safety precautions have been read and understood. Do not get in eyes or on skin or clothing. Do not ingest. Avoid breathing vapor or mist. Use only with adequate ventilation. Wear appropriate respirator when ventilation is inadequate. Do not enter storage areas and confined spaces unless adequately ventilated. Keep in the original container or an approved alternative made from a compatible material, kept tightly closed when not in use. Store and use away from heat, sparks, open flame or any other ignition source. Use explosion-proof electrical (ventilating, lighting and material handling) equipment. Use only non-sparking tools. Take precautionary measures against electrostatic discharges. Empty containers retain product residue and can be hazardous. Do not reuse container.

Advice on general occupational hygiene : Eating, drinking and smoking should be prohibited in areas where this material is handled, stored and processed. Workers should wash hands and face before eating, drinking and smoking. Remove contaminated clothing and protective equipment before entering eating areas. See also Section 8 for additional information on hygiene measures.

Section 7. Handling and storage

Conditions for safe storage, including any incompatibilities : Store in accordance with local regulations. Store in a segregated and approved area. Store in original container protected from direct sunlight in a dry, cool and well-ventilated area, away from incompatible materials (see Section 10) and food and drink. Store locked up. Eliminate all ignition sources. Separate from oxidizing materials. Keep container tightly closed and sealed until ready for use. Containers that have been opened must be carefully resealed and kept upright to prevent leakage. Do not store in unlabeled containers. Use appropriate containment to avoid environmental contamination.

Section 8. Exposure controls/personal protection

Control parameters

Occupational exposure limits

Ingredient name	Exposure limits
heptan-2-one	**ACGIH TLV (United States, 3/2015).** TWA: 233 mg/m³ 8 hours. TWA: 50 ppm 8 hours. **NIOSH REL (United States, 10/2013).** TWA: 465 mg/m³ 10 hours. TWA: 100 ppm 10 hours. **OSHA PEL (United States, 2/2013).** TWA: 465 mg/m³ 8 hours. TWA: 100 ppm 8 hours.
n-butyl acetate	**ACGIH TLV (United States, 3/2015).** STEL: 200 ppm 15 minutes. TWA: 150 ppm 8 hours. **NIOSH REL (United States, 10/2013).** STEL: 950 mg/m³ 15 minutes. STEL: 200 ppm 15 minutes. TWA: 710 mg/m³ 10 hours. TWA: 150 ppm 10 hours. **OSHA PEL (United States, 2/2013).** TWA: 710 mg/m³ 8 hours. TWA: 150 ppm 8 hours.
acetone	**ACGIH TLV (United States, 3/2015).** STEL: 500 ppm 15 minutes. TWA: 250 ppm 8 hours. **NIOSH REL (United States, 10/2013).** TWA: 590 mg/m³ 10 hours. TWA: 250 ppm 10 hours. **OSHA PEL (United States, 2/2013).** TWA: 2400 mg/m³ 8 hours. TWA: 1000 ppm 8 hours.
4-methylpentan-2-one	**ACGIH TLV (United States, 3/2015).** STEL: 75 ppm 15 minutes. TWA: 20 ppm 8 hours. **NIOSH REL (United States, 10/2013).** STEL: 300 mg/m³ 15 minutes. STEL: 75 ppm 15 minutes. TWA: 205 mg/m³ 10 hours. TWA: 50 ppm 10 hours.

Section 8. Exposure controls/personal protection

	OSHA PEL (United States, 2/2013). TWA: 410 mg/m³ 8 hours. TWA: 100 ppm 8 hours.
4-chloro-α,α,α-trifluorotoluene	None.
bis(1,2,2,6,6-pentamethyl-4-piperidyl) sebacate	None.
methyl 1,2,2,6,6-pentamethyl-4-piperidyl sebacate	None.

Appropriate engineering controls : Use only with adequate ventilation. Use process enclosures, local exhaust ventilation or other engineering controls to keep worker exposure to airborne contaminants below any recommended or statutory limits. The engineering controls also need to keep gas, vapor or dust concentrations below any lower explosive limits. Use explosion-proof ventilation equipment.

Environmental exposure controls : Emissions from ventilation or work process equipment should be checked to ensure they comply with the requirements of environmental protection legislation. In some cases, fume scrubbers, filters or engineering modifications to the process equipment will be necessary to reduce emissions to acceptable levels.

Individual protection measures

Hygiene measures : Wash hands, forearms and face thoroughly after handling chemical products, before eating, smoking and using the lavatory and at the end of the working period. Appropriate techniques should be used to remove potentially contaminated clothing. Contaminated work clothing should not be allowed out of the workplace. Wash contaminated clothing before reusing. Ensure that eyewash stations and safety showers are close to the workstation location.

Eye/face protection : Safety eyewear complying with an approved standard should be used when a risk assessment indicates this is necessary to avoid exposure to liquid splashes, mists, gases or dusts. If contact is possible, the following protection should be worn, unless the assessment indicates a higher degree of protection: chemical splash goggles.

Skin protection

Hand protection : Chemical-resistant, impervious gloves complying with an approved standard should be worn at all times when handling chemical products if a risk assessment indicates this is necessary. Considering the parameters specified by the glove manufacturer, check during use that the gloves are still retaining their protective properties. It should be noted that the time to breakthrough for any glove material may be different for different glove manufacturers. In the case of mixtures, consisting of several substances, the protection time of the gloves cannot be accurately estimated.

Body protection : Personal protective equipment for the body should be selected based on the task being performed and the risks involved and should be approved by a specialist before handling this product. When there is a risk of ignition from static electricity, wear anti-static protective clothing. For the greatest protection from static discharges, clothing should include anti-static overalls, boots and gloves.

Other skin protection : Appropriate footwear and any additional skin protection measures should be selected based on the task being performed and the risks involved and should be approved by a specialist before handling this product.

Respiratory protection : Use a properly fitted, air-purifying or air-fed respirator complying with an approved standard if a risk assessment indicates this is necessary. Respirator selection must be based on known or anticipated exposure levels, the hazards of the product and the safe working limits of the selected respirator.

Section 9. Physical and chemical properties

Appearance

Physical state	: Liquid.
Color	: Not available.
Odor	: NOT AVAILABLE. (CAPITAL-PERIOD)
Odor threshold	: Not available.
pH	: Not available.
Melting/freezing point	: Not available.
Boiling point	: 56°C (132.8°F)
boiling range	: Not available.
Flash point	: Closed cup: -18°C (-0.4°F)
Evaporation rate	: Not available.
Flammability (solid, gas)	: Not available.
Upper/lower flammability or explosive limits	
Upper:	: Not determined.
Lower:	: Not determined.
Vapor pressure	: Not available.
Vapor density	: Not available.
Relative density	: 0.938
Density	: 7.83 lbs/gal 0.938 g/cm³
Solubility	: Not available.
Solubility in water	: Not available.
Partition coefficient: n-octanol/water	: Not available.
Auto-ignition temperature	: Not available.
Decomposition temperature	: Not available.
Viscosity	: Kinematic (room temperature): 2.13 cm^2/s (213 cSt)
Weight Volatiles	: 54.17% (w/w)
Volume Volatiles	: 60.89 %(v/v)
Weight Solids	: 45.83 %(w/w)
Volume Solids	: 39.11 %(v/v)
Regulatory VOC	: 3.77 lbs/gal (452 g/l) minus water and exempt solvents

Section 10. Stability and reactivity

Reactivity	: No specific test data related to reactivity available for this product or its ingredients.
Chemical stability	: The product is stable.
Possibility of hazardous reactions	: Under normal conditions of storage and use, hazardous reactions will not occur.
Conditions to avoid	: Avoid all possible sources of ignition (spark or flame). Do not pressurize, cut, weld, braze, solder, drill, grind or expose containers to heat or sources of ignition.

Section 10. Stability and reactivity

Incompatible materials : Reactive or incompatible with the following materials: oxidizing materials

Hazardous decomposition products : Under normal conditions of storage and use, hazardous decomposition products should not be produced.

Section 11. Toxicological information

Information on toxicological effects

Acute toxicity

Product/ingredient name	Result	Species	Dose	Exposure
heptan-2-one	LD50 Oral	Rat	1600 mg/kg	-
n-butyl acetate	LC50 Inhalation Vapor	Rat	390 ppm	4 hours
	LD50 Dermal	Rabbit	>17600 mg/kg	-
	LD50 Oral	Rat	10768 mg/kg	-
acetone	LD50 Oral	Rat	5800 mg/kg	-
4-methylpentan-2-one	LD50 Oral	Rat	2080 mg/kg	-
4-chloro-α,α,α-trifluorotoluene	LC50 Inhalation Vapor	Rat	22000 mg/m³	4 hours
	LD50 Dermal	Rabbit	>2700 mg/kg	-
	LD50 Oral	Rat	13 g/kg	-
	LD50 Oral	Rat	>6800 mg/kg	-

Irritation/Corrosion

Product/ingredient name	Result	Species	Score	Exposure	Observation
heptan-2-one	Skin - Mild irritant	Rabbit	-	24 hours 14 milligrams	-
n-butyl acetate	Eyes - Moderate irritant	Rabbit	-	100 milligrams	-
	Skin - Moderate irritant	Rabbit	-	24 hours 500 milligrams	-
acetone	Eyes - Mild irritant	Human	-	186300 parts per million	-
	Eyes - Mild irritant	Rabbit	-	10 microliters	-
	Eyes - Moderate irritant	Rabbit	-	24 hours 20 milligrams	-
	Eyes - Severe irritant	Rabbit	-	20 milligrams	-
	Skin - Mild irritant	Rabbit	-	24 hours 500 milligrams	-
	Skin - Mild irritant	Rabbit	-	395 milligrams	-
4-methylpentan-2-one	Eyes - Moderate irritant	Rabbit	-	24 hours 100 microliters	-
	Eyes - Severe irritant	Rabbit	-	40 milligrams	-
	Skin - Mild irritant	Rabbit	-	24 hours 500 milligrams	-

Sensitization

Not available.

Mutagenicity

Section 11. Toxicological information

Not available.

Carcinogenicity

Not available.

Classification

Product/ingredient name	OSHA	IARC	NTP
4-methylpentan-2-one	-	2B	-

Reproductive toxicity

Not available.

Teratogenicity

Not available.

Specific target organ toxicity (single exposure)

Name	Category	Route of exposure	Target organs
n-butyl acetate acetone 4-methylpentan-2-one	Category 3 Category 3 Category 3	Not applicable. Not applicable. Not applicable.	Narcotic effects Narcotic effects Respiratory tract irritation

Specific target organ toxicity (repeated exposure)

Not available.

Aspiration hazard

Not available.

Information on the likely routes of exposure : Not available.

Potential acute health effects

Eye contact : Causes serious eye irritation.

Inhalation : Harmful if inhaled. Can cause central nervous system (CNS) depression. May cause drowsiness or dizziness.

Skin contact : Causes skin irritation. May cause an allergic skin reaction.

Ingestion : Can cause central nervous system (CNS) depression.

Symptoms related to the physical, chemical and toxicological characteristics

Eye contact : Adverse symptoms may include the following:
pain or irritation
watering
redness

Inhalation : Adverse symptoms may include the following:
nausea or vomiting
headache
drowsiness/fatigue
dizziness/vertigo
unconsciousness

Section 11. Toxicological information

Skin contact : Adverse symptoms may include the following:
irritation
redness

Ingestion : No specific data.

Delayed and immediate effects and also chronic effects from short and long term exposure

Short term exposure

Potential immediate effects : Not available.

Potential delayed effects : Not available.

Long term exposure

Potential immediate effects : Not available.

Potential delayed effects : Not available.

Potential chronic health effects

Not available.

General : Once sensitized, a severe allergic reaction may occur when subsequently exposed to very low levels.

Carcinogenicity : Suspected of causing cancer. Risk of cancer depends on duration and level of exposure.

Mutagenicity : No known significant effects or critical hazards.

Teratogenicity : No known significant effects or critical hazards.

Developmental effects : No known significant effects or critical hazards.

Fertility effects : No known significant effects or critical hazards.

Numerical measures of toxicity

Acute toxicity estimates

Route	ATE value
Oral	3808.3 mg/kg
Inhalation (gases)	10001.2 ppm
Inhalation (vapors)	24.45 mg/l
Inhalation (dusts and mists)	3.334 mg/l

Section 12. Ecological information

Toxicity

Section 12. Ecological information

Product/ingredient name	Result	Species	Exposure
heptan-2-one	Acute LC50 131000 to 137000 µg/l Fresh water	Fish - Pimephales promelas	96 hours
n-butyl acetate	Acute LC50 32000 µg/l Marine water	Crustaceans - Artemia salina - Nauplii	48 hours
	Acute LC50 62000 µg/l	Fish - Danio rerio	96 hours
acetone	Acute EC50 20.565 mg/l Marine water	Algae - Ulva pertusa	96 hours
	Acute LC50 6000000 µg/l Fresh water	Crustaceans - Gammarus pulex	48 hours
	Acute LC50 10000 µg/l Fresh water	Daphnia - Daphnia magna	48 hours
	Acute LC50 5600 ppm Fresh water	Fish - Poecilia reticulata	96 hours
	Chronic NOEC 4.95 mg/l Marine water	Algae - Ulva pertusa	96 hours
	Chronic NOEC 0.016 ml/L Fresh water	Crustaceans - Daphniidae	21 days
	Chronic NOEC 0.1 ml/L Fresh water	Daphnia - Daphnia magna - Neonate	21 days
	Chronic NOEC 5 µg/l Marine water	Fish - Gasterosteus aculeatus - Larvae	42 days
4-methylpentan-2-one	Acute LC50 505000 to 514000 µg/l Fresh water	Fish - Pimephales promelas	96 hours
	Chronic NOEC 78 mg/l Fresh water	Daphnia - Daphnia magna	21 days
	Chronic NOEC 168 mg/l Fresh water	Fish - Pimephales promelas - Embryo	33 days

Persistence and degradability

Not available.

Bioaccumulative potential

Product/ingredient name	$LogP_{ow}$	BCF	Potential
heptan-2-one	2.26	-	low
n-butyl acetate	2.3	-	low
acetone	-0.23	-	low
4-methylpentan-2-one	1.9	-	low

Mobility in soil

Soil/water partition coefficient (K_{OC}) : Not available.

Other adverse effects : No known significant effects or critical hazards.

Section 13. Disposal considerations

Disposal methods : The generation of waste should be avoided or minimized wherever possible. Disposal of this product, solutions and any by-products should at all times comply with the requirements of environmental protection and waste disposal legislation and any regional local authority requirements. Dispose of surplus and non-recyclable products via a licensed waste disposal contractor. Waste should not be disposed of untreated to the sewer unless fully compliant with the requirements of all authorities with jurisdiction. Waste packaging should be recycled. Incineration or landfill should only be considered when recycling is not feasible. This material and its container must be disposed of in a safe way. Care should be taken when handling emptied containers that have not been

Section 13. Disposal considerations

cleaned or rinsed out. Empty containers or liners may retain some product residues. Vapor from product residues may create a highly flammable or explosive atmosphere inside the container. Do not cut, weld or grind used containers unless they have been cleaned thoroughly internally. Avoid dispersal of spilled material and runoff and contact with soil, waterways, drains and sewers.

Section 14. Transport information

Special precautions for user : The actual shipping description for this product may vary based several factors including, but not limited to, the volume of material, size of the container, mode of transport and use of exemptions or exceptions found in the applicable regulations. The information provided in Section 14 is one possible shipping description for this product. Consult your shipping specialist or supplier for appropriate assignment of the DOT information.

Transport within user's premises: always transport in closed containers that are upright and secure. Ensure that persons transporting the product know what to do in the event of an accident or spillage.

	DOT Classification	TDG Classification	Mexico Classification	IMDG	IATA
UN number	UN1263	UN1263	UN1263	UN1263	UN1263
UN proper shipping name	PAINT	PAINT	PAINT	PAINT	PAINT
Transport hazard class(es)	3	3	3	3	3
Packing group	II	II	II	II	II
Environmental hazards	No.	Yes.	No.	No.	No.

Section 15. Regulatory information

U.S. Federal regulations

United States inventory (TSCA 8b): All components are listed or exempted.

SARA 311/312

Classification : Fire hazard
Immediate (acute) health hazard
Delayed (chronic) health hazard

SARA 313

Section 15. Regulatory information

	Product name	CAS number	%
Form R - Reporting requirements	4-methylpentan-2-one	108-10-1	5 - 10

SARA 313 notifications must not be detached from the SDS and any copying and redistribution of the SDS shall include copying and redistribution of the notice attached to copies of the SDS subsequently redistributed.

California Prop. 65

WARNING: This product contains a chemical known to the State of California to cause cancer.
WARNING: This product contains less than 1% of a chemical known to the State of California to cause birth defects or other reproductive harm.

International lists

National inventory

Australia	:	At least one component is not listed.
Canada	:	All components are listed or exempted.
China	:	At least one component is not listed.
Europe	:	At least one component is not listed.
Japan	:	At least one component is not listed.
Malaysia	:	At least one component is not listed.
New Zealand	:	All components are listed or exempted.
Philippines	:	All components are listed or exempted.
Republic of Korea	:	At least one component is not listed.
Taiwan	:	At least one component is not listed.

Section 16. Other information

Hazardous Material Information System (U.S.A.)

Health	*	2
Flammability		3
Physical hazards		0

Caution: HMIS® ratings are based on a 0-4 rating scale, with 0 representing minimal hazards or risks, and 4 representing significant hazards or risks Although HMIS® ratings are not required on SDSs under 29 CFR 1910.1200, the preparer may choose to provide them. HMIS® ratings are to be used with a fully implemented HMIS® program. HMIS® is a registered mark of the National Paint & Coatings Association (NPCA). HMIS® materials may be purchased exclusively from J. J. Keller (800) 327-6868.

The customer is responsible for determining the PPE code for this material.

National Fire Protection Association (U.S.A.)

Section 16. Other information

Reprinted with permission from NFPA 704-2001, Identification of the Hazards of Materials for Emergency Response Copyright ©1997, National Fire Protection Association, Quincy, MA 02269. This reprinted material is not the complete and official position of the National Fire Protection Association, on the referenced subject which is represented only by the standard in its entirety.

Copyright ©2001, National Fire Protection Association, Quincy, MA 02269. This warning system is intended to be interpreted and applied only by properly trained individuals to identify fire, health and reactivity hazards of chemicals. The user is referred to certain limited number of chemicals with recommended classifications in NFPA 49 and NFPA 325, which would be used as a guideline only. Whether the chemicals are classified by NFPA or not, anyone using the 704 systems to classify chemicals does so at their own risk.

History

Date of issue/Date of revision	:	21 January 2016
Version	:	16.01
MSDS #	:	001410 0006
Key to abbreviations	:	ATE = Acute Toxicity Estimate BCF = Bioconcentration Factor GHS = Globally Harmonized System of Classification and Labelling of Chemicals IATA = International Air Transport Association IBC = Intermediate Bulk Container IMDG = International Maritime Dangerous Goods LogPow = logarithm of the octanol/water partition coefficient MARPOL 73/78 = International Convention for the Prevention of Pollution From Ships, 1973 as modified by the Protocol of 1978. ("Marpol" = marine pollution) UN = United Nations

Notice to reader

To the best of our knowledge, the information contained herein is accurate. However, neither the above-named supplier, nor any of its subsidiaries, assumes any liability whatsoever for the accuracy or completeness of the information contained herein.
Final determination of suitability of any material is the sole responsibility of the user. All materials may present unknown hazards and should be used with caution. Although certain hazards are described herein, we cannot guarantee that these are the only hazards that exist.

MATERIAL SAFETY DATA SHEET

ERVIN INDUSTRIES, INC.
3893 RESEARCH PARK DRIVE
ANN ARBOR, MI 48108-2217

TELEPHONE: (734) 769-4600
FAX: (734) 663-0136

Revision Date: 12/5/2012 | Replaces Date: 12/9/2009 | Revision Level: **T**

PREPARED BY: Mark Hash | Ervin Industries

SECTION I — PRODUCT IDENTIFICATION

Product Name		Chemical Family
AMASTEEL SHOT	**AMABRASIVE**	**FERROUS**
AMASTEEL GRIT	**(SHOT / GRIT MIX)**	

SECTION II — COMPOSITION / INGREDIENTS

Chemical Name	CAS Registry No	% Weight	ACGIH - TLV (mg/m^3)	OSHA - PEL (mg/m^3)
Iron - Fe	7439-89-6	>96		
Oxide fume as Fe			5	10
Carbon - C	7440-44-0	<1.2	none estab.	none estab.
Manganese - Mn	7439-96-5	<1.3		
Elemental, Inorganic Compounds as Mn			0.2	5 (ceiling)
Fume as Mn			none estab.	5 (ceiling)
Silicon - Si	7440-21-3	<1.2		
as total dust			10	15
Respirable fraction			none estab.	5
Chromium - Cr	7440-47-3	<0.25		
Elemental, Inorganic Compounds as Cr metal			0.5	1
Cr II compounds - as Cr			none estab.	0.5
Cr III compounds - as Cr			0.5	0.5
Cr VI compounds - water soluble			0.05	5 ug
Cr VI compounds - insoluble			0.01	5 ug
Chromic Acid and Chromates as CrO_3			none estab.	0.1 (ceiling)
Cr VI (hexavalent chromium) in product as shipped		**Not detected**	0.05 & 0.01	5 ug /2.5 action
Copper – Cu	7440-50-8	<0.25		
Fume			0.2	0.1
Dust & mists			1	1
Nickel - Ni	7440-02-0	<0.20		
Elemental metal			1.5	
Insoluble as Ni			0.1	1
Soluble compounds as Ni			0.2	1

SECTION III — PHYSICAL DATA

Cast steel shot and grit are non-hazardous as received. Fine metallic dust is generated as the abrasive breaks down from impact and wear during normal use. Since the ferrous content is >96%, dust or fumes will consist mainly of iron or iron oxide. In addition, the fine steel dust created can be a mild explosion hazard (see section V).

Boiling Point - 2850-3150 Degrees C	Melting Point - 1371-1483 Degrees C
Specific Gravity (at 60 Degrees F) >7.6	Vapor Pressure - Not Applicable
% Volatile by Volume - Not Applicable	pH - Not Applicable
Appearance and Odor - Spherical - no odor	Percent Solid by Weight - 100%

SECTION IV — REACTIVITY DATA

Stability – Stable | Hazardous decomposition products – None | Hazardous Polymerization - will not occur

Shot will break down into progressively smaller particles and dust during normal use.

MATERIAL SAFETY DATA SHEET

ERVIN

SECTION V — FIRE AND EXPLOSION HAZARD DATA

Flash Point - Not Applicable	Auto Ignition Temperature (solid iron exposed to Oxygen) -930 degree C
Flammability Limits - Not Applicable	Cast steel shot will not burn or explode

A mild fire or explosion hazard situation may be created from fine metal dust. Fire Extinguishing method for dust created due to use - use Class D extinguishing agents or dry sand to exclude air. Do not use water or other liquids, or foam.

NFPA Hazard Rating: 0 = Insignificant 1 = Slight 2 = Moderate 3 = High 4 = Extreme

Health (blue) = 0 Flammability (red) = 0 Reactivity (yellow) = 0 Special (colorless)

SECTION VI — HEALTH HAZARD DATA

Emergency and First Aid Procedure - If inhaled, move out of area into fresh air. Flush eyes with running water, have any remaining particles removed from eyes by a qualified medical person; call 911 for immediate medical assistance.

The end user should have an industrial hygiene evaluation to determine the proper personal protective equipment for each application or blasting operation. Threshold Limit Values - Permissible Exposure Limits - see Section II

Primary Routes of entry - inhalation of dust or dust particles in eyes. Target Organs - Lung for chromium and lung & nasal for Nickel. Metallic Nickel is reasonably anticipated to be a human carcinogen.

Over exposure to dust and fumes may cause mouth, eye, and nose irritation. Prolonged overexposure to manganese dust or fume affects the central nervous system. Prolonged overexposure to iron oxide fume can cause siderosis, or "iron pigmentation" of the lung. It can be seen on a chest x-ray but causes little or no disability.

Fumes generated by welding or flame cutting a surface containing new or used abrasive or the dust created by use of the abrasive may convert a small portion of chromium to hexavalent chromium. IARC reports welding fumes are possibly carcinogenic to humans.

SECTION VII — PERSONAL PROTECTION INFORMATION

Ventilation - General ventilation and local exhaust should be provided to keep the dust levels below the limits shown in Section II.

Respiratory protection – If an industrial hygiene evaluation shows dust exceeds OSHA PEL's indicated in Section II, a NIOSH approved respirator with appropriate filters should be worn as determined by the end user.

Eye protection - Approved safety glasses w/side shields should always be worn. Other protective equipment determined by the end user.

SECTION VIII — SPILL / LEAK PROCEDURES AND WASTE DETERMINATION

Shot spilled or leaked onto floors can create hazardous walking conditions. When cleaning up quantities of dust; if exceeding OSHA permissible exposure limits, an approved respirator with appropriate filters should be used.

Dust from blasting or peening operations always contain contaminants. The dust must be tested to determine if it is hazardous or non-hazardous waste. After such determination, the dust must be disposed of according to appropriate local, State or Federal regulations.

SECTION IX — SPECIAL PRECAUTIONS

Precautions to be taken in handling and storing - Keep dry to reduce rusting. **Observe maximum floor loading limitations**.

SECTION X — TRANSPORTATION

DOT Classification - Not a regulated material Proper Shipping Name - N/A DOT ID # - Not regulated

SECTION XI — REGULATORY

a) CERCLA Hazardous Substance	_____ **yes**	__X__**no**
b) SARA, Title III, Extremely Hazardous Substance	_____ **yes**	__X__**no**
c) Toxic Chemical Release Report	__X__ **yes**	_____**no**

Nickel & Manganese are subject to requirements of Section 313 of the Community Right-to-know Act of 1986 & 40CFR Part 372.

The information presented here has been compiled from sources considered to be reliable and accurate to the best of our knowledge and belief, but is not guaranteed to be so.

Mr. Sandman Inc.
The Surface Preparation Specialists
• Service
• Sales
• Rentals
697 Ahua Street, Honolulu, HI 96819-2002

MATERIAL SAFETY DATA SHEET

MATERIAL SAFETY DATA SHEET - May be used to comply with OSHA's Hazard Communication Standard, 29 CFR 1910.1200. Standard must be consulted for specific requirements.

Date : 9/25/12

Ballotini Impact Beads
Glass Beads

1. CHEMICAL PRODUCT AND COMPANY IDENTIFICATION

PRODUCT NAME: Ballotini Impact Beads, Soda Lime Glass
CHEMICAL NAME: Glass, Glass Oxide

COMPANY IDENTIFICATION
Potters Industries, Inc.
P.O. Box 840
Valley Forge, PA 19482-0840

EMERGENCY / TECHNICAL NUMBERS
(610) 651-4700
(201) 507-4204 (info)
CHEMTREC:
(800) 424-9300

PRODUCT INFORMATION: MSDS Requests and Product Information: (201) 507-4204
SPECIAL NOTES:

2. COMPOSITION / INFORMATION INGREDIENTS

COMPONENTS	CAS No.	OSHA Exposure Limits (PEL)	ACGIH Recommended Limits (TLV)	Percent by Weight
Glass Oxide	65997-17-3			100
Nuisance Dust (particles not otherwise classified)		15 mg/m³	10 mg/m³	
Nuisance Dust (respirable fraction)		5 mg/m³	5 mg/m³	

COMPOSITION COMMENTS:
Contains no free silica. All components are amorphous/noncrystalline. Amount of dust depends on particle size.

3. HAZARDS IDENTIFICATION

POTENTIAL HEALTH EFFECTS
EYE: Irritation may result if recommended exposure limits are exceeded.
SKIN: Not absorbed through the skin.
INGESTION: No known adverse effects, but ingestion is not recommended.
INHALATION: Irritation may result if recommended exposure limits are exceeded.
CHRONIC EFFECTS: Chronic lung conditions may be aggravated by exposure to high concentrations of dust.

4. FIRST AID MEASURES

EYE: Flush with large amounts of water. Get medical attention if needed.
SKIN: Wash with water. Obtain first aid or medical assistance if needed.
INGESTION: If swallowed, seek medical attention.
INHALATION: Remove to fresh air, apply artificial respiration as needed. Get medical attention if needed.

5. FIRE FIGHTING MEASURES

FLAMMABLE PROPERTIES: Nonflammable
FLASH POINT: None
METHOD USED: N/A
LEL: None
UEL: None
EXTINGUISHING MEDIA: Nonflammable
FIRE FIGHTING INSTRUCTIONS: None
SPECIAL FIRE FIGHTING PROCEDURES: None

6. ACCIDENTAL RELEASE MEASURES

PERSONAL PRECAUTIONS: Wear protective equipment. See Section 8.
CLEANUP MEASURES: Sweep up and discard. Avoid excessive dusting. May be disposed of in approved landfill in accordance with Federal, State and Local regulations.
OTHER PRECAUTIONS: This material is not a SARA Title III reportable substance.

7. HANDLING AND STORAGE

NORMAL STORAGE: General dry storage, ambient air temperature and pressure.
HANDLING: Use standard good manufacturing practices when handling material. Spillage may result in slippery conditions. When transferring material, care should be taken to avoid dusting.

8. EXPOSURE CONTROLS / PERSONAL PROTECTION

ENGINEERING CONTROLS: Provide sufficient local exhaust ventilation to maintain exposures below PELs or TLVs.
RESPIRATORY PROTECTION: (Specify Type) NIOSH approved dust mask, if recommended exposure limits are exceeded.
EYE AND FACE PROTECTION: Use NIOSH approved safety glasses with side shields. If there is potential for exposure to particles which could cause mechanical injury to the eye, wear NIOSH approved goggles.
SKIN AND HAND PROTECTION: Gloves as desired by user.

9. PHYSICAL AND CHEMICAL PROPERTIES

PHYSICAL DESCRIPTION: White Powder
ODOR: Odorless
VAPOR PRESSURE: N/A
BOILING POINT: N/A
SOLUBILITY: Insoluble in water.
EVAPORATION RATE (Butyl Acetate = 1): N/A
pH: N/A
FLASH POINT: None
VAPOR DENSITY (AIR = 1): N/A
SOFTENING POINT: 730°C
SPECIFIC GRAVITY: 2.46 - 2.49 g/cc

10. STABILITY AND REACTIVITY

HAZARDOUS DECOMPOSITION PRODUCTS: None known.
CHEMICAL STABILITY: Stable.
CONDITIONS TO AVOID: Material is stable.
INCOMPATIBILITY WITH OTHER MATERIALS: Hydrofluoric Acid.
HAZARDOUS POLYMERIZATION: Polymerization will not occur.

11. TOXICOLOGICAL INFORMATION

CARCINOGENICITY

NTP: Not listed.

IARC MONOGRAPHS: Not listed.

OSHA REGULATIONS: Not listed.

12. ECOLOGICAL INFORMATION

Not Available.

13. DISPOSAL CONSIDERATIONS

May be disposed of in an approved landfill in accordance with all local, state and federal regulations.

14. TRANSPORTATION INFORMATION

Not Available.

15. REGULATORY INFORMATION

This material is not a SARA Title III reportable substance.

Originally prepared by: R. A. Schleifstein, Director of Product Applications, Potters Industries, Inc., Feb. 16, 1995.

This information is furnished without warranty, representation, inducement or license of any kind, except that it is accurate to the best of Potters Industries, Inc. knowledge, or obtained from sources believed by Potters to be accurate, and Potters does not assume any legal responsibility for use or reliance upon same. Customers are encouraged to conduct their own tests. Before using any products, read its label.

1. Identification of the substance/mixture and of the company/undertaking

Manufacturer: Axalta Coating Systems, LLC
Applied Corporate Center
50 Applied Card Way, Suite 300
Glen Mills, PA 19342

Telephone: Product information: (855) 6-AXALTA
Medical emergency: (855) 274-5698
Transportation emergency: (800) 424-9300 (CHEMTREC)

Product: **Lacquer Thinners and Cleaning Solvents**

DOT Shipping Name: See DOT Addendum.

Hazardous Materials Information: See Section 10.

Copyright 2014, Axalta Coating Systems, LLC and all affiliates. All rights reserved. Copies may be made only for those using Axalta Coating Systems products.

2. Composition/information on ingredients

INGREDIENTS	CAS #	VAPOR PRESSURE	EXPOSURE LIMITS
1,2,4-trimethyl benzene	95-63-6	7.0@44.4 °C	A 25.0 ppm, O 25.0 ppm
1,3,5-trimethyl benzene	108-67-8	None	A 25.0 ppm, O None
2,2,4-trimethylpentane	540-84-1	None	A 300.0 ppm, O 500.0 ppm
4-chlorobenzotrifluoride	98-56-6	7.6@25.0 °C	D 20.0 ppm 8 & 12 hour TWA, A None, O None
Acetic acid	64-19-7	15.4	A 15.0 ppm 15 min STEL, A 10.0 ppm, O 10.0 ppm, D 10.0 ppm 8 & 12 hour TWA
Acetone	67-64-1	247.0@68.0 °F	A 750.0 ppm 15 min STEL, A 500.0 ppm, O 1000.0 ppm, D 500.0 ppm 8 & 12 hour TWA
Aliphatic hydrocarbon	64742-47-8	1.0	A 200.0 mg/m3 particulate Skin, O None
Aliphatic hydrocarbon/aliphatic ester/surf	Not Avail	0.2@25.0 °C	A None, O None
Alkyloxy polyethylene oxyethanol	84133-50-6	0.0	A None, O None
Aromatic hydrocarbon-A	64742-94-5	10.0	D 100.0 ppm 8 & 12 hour TWA, A None, O None
Aromatic hydrocarbon-B	64742-95-6	10.0@25.0 °C	D 50.0 ppm 8 & 12 hour TWA, A None, O None
Cumene	98-82-8	3.7	A 50.0 ppm, O 50.0 ppm Skin
Cyclohexane, methyl-	108-87-2	None	A 400.0 ppm, O 400.0 ppm
Dimethyl glutarate	1119-40-0	0.2	D 10.0 mg/m3 8 & 12 hour TWA, A None, O None
Ethyl 3-ethoxy propionate	763-69-9	2.3	A None, O None
Ethylbenzene	100-41-4	9.5	A 20.0 ppm, O 100.0 ppm, D 25.0 ppm 8 & 12 hour TWA
Ethylene glycol monobutyl ether	111-76-2	0.6	A 20.0 ppm, O 50.0 ppm Skin, D 20.0 ppm 8 & 12 hour TWA
Ethylene glycol monobutyl ether acetate	112-07-2	0.3	A 20.0 ppm, D 20.0 ppm 8 & 12 hour TWA, O None
Heptane	142-82-5	45.0@66.0 °F	A 500.0 ppm 15 min STEL, A 400.0 ppm, O 500.0 ppm
Hydrotreated heavy naphtha (petroleum)-A	64742-47-8	3.3@68.0 °F	A None, O None
Hydrotreated heavy naphtha (petroleum)-B	64742-48-9	0.3@68.0 °F	A 100.0 ppm, O 500.0 ppm, D 100.0 ppm
Isopropyl alcohol	67-63-0	60.2	A None, O None
Methyl alcohol	67-56-1	127.7@21.2 °C	A 250.0 ppm 15 min STEL Skin, A 200.0 ppm Skin, O 200.0 ppm, D 200.0 ppm 8 & 12 hour TWA Skin
Methyl amyl ketone	110-43-0	3.4	A 50.0 ppm, O 100.0 ppm
Methyl isoamyl ketone	110-12-3	5.3	A 20.0 ppm, O None
N-butyl alcohol	71-36-3	6.0@68.0 °F	A 20.0 ppm, O 100.0 ppm, D 50.0 ppm 15 min TWA, D 25.0 ppm 8 & 12 hour TWA
Naphthalene	91-20-3	1.0@52.6 °C	A 15.0 ppm CEIL Skin, A 10.0 ppm Skin, O 10.0 ppm, D 0.1 ppm 8 & 12 hour TWA
Propylene glycol monomethyl ether acetate	108-65-6	3.8	D 30.0 ppm 15 min TWA, A None, O None
Toluene	108-88-3	22.0	A 20.0 ppm, O 300.0 ppm CEIL, O 500.0 ppm 10 min TWA, O 200.0 ppm, D 50.0 ppm 8 & 12 hour TWA Skin
Vm&p naphtha	8032-32-4	17.9@68.0 °F	A 300.0 ppm, D 100.0 ppm, O None
Water	7732-18-5	23.6	A None, O None
Xylene	1330-20-7	8.0@25.0 °C	A 150.0 ppm 15 min STEL, A 100.0 ppm, O 100.0 ppm, D 100.0 ppm 8 & 12 hour TWA

***A=ACGIH, O=OSHA, D=DuPont, S=Suppliers. Limits are 8 hour TWA unless otherwise specified. Vapor pressure @ 20° C unless otherwise noted. D=DuPont, Results obtained from E. I. du Pont de Nemours and Company.**

Copyright 2014, Axalta Coating Systems, LLC and all affiliates. All rights reserved. Copies may be made only for those using Axalta Coating Systems products.

3. Hazards identification

Potential Health Effects:

Inhalation:

May cause nose and throat irritation. May cause nervous system depression characterized by the following progressive steps: headache, dizziness, nausea, staggering gait, confusion, unconsciousness. Reports have associated repeated and prolonged overexposure to solvents with permanent brain and nervous system damage.

Ingestion:

May result in gastrointestinal distress.

Skin or eye contact:

May cause irritation or burning of the eyes. Repeated or prolonged liquid contact may cause skin irritation with discomfort and dermatitis.

Other Potential Health Effects in addition to those listed above:

4-chlorobenzotrifluoride

Increased susceptibility to the effects of this material may be observed in people with preexisting disease of any of the following: skin. Prolonged or repeated exposure may cause damage to any of the following organs/systems: kidneys, liver, thyroid. Potential skin sensitizer that may cause allergic reactions and contact dermatitis resulting in severe irritation, dryness, and cracking of the skin. Ingestion may cause any of the following: gastrointestinal irritation. Eye contact may cause any of the following: permanent eye injury. Inhalation may cause any of the following: stupor (central nervous system depression), respiratory tract irritation.

Acetic acid

Ingestion may cause any of the following: burns to mouth and stomach. Skin or eye contact may cause any of the following: irritation, burns.

Acetone

The following medical conditions may be aggravated by exposure: lung disease, eye disorders, skin disorders. Overexposure may cause damage to any of the following organs/systems: blood, central nervous system, eyes, kidneys, liver, respiratory system, skin.

Aliphatic hydrocarbon

Laboratory studies with rats have shown that petroleum distillates can cause kidney damage and kidney or liver tumors. These effects were not seen in similar studies with guinea pigs, dogs, or monkeys. Several studies evaluating petroleum workers have not shown a significant increase of kidney damage or an increase in kidney or liver tumors.

Aromatic hydrocarbon-A

Laboratory studies with rats have shown that petroleum distillates can cause kidney damage and kidney or liver tumors. These effects were not seen in similar studies with guinea pigs, dogs, or monkeys. Several studies evaluating petroleum workers have not shown a significant increase of kidney damage or an increase in kidney or liver tumors.

Aromatic hydrocarbon-B

The following medical conditions may be aggravated by exposure: skin disorders. Laboratory studies with rats have shown that petroleum distillates can cause kidney damage and kidney or liver tumors. These effects were not seen in similar studies with guinea pigs, dogs, or monkeys. Several studies evaluating petroleum workers have not shown a significant increase of kidney damage or an increase in kidney or liver tumors.

Cumene

WARNING: This chemical is known to the State of California to cause cancer.

Ethylbenzene

Is an IARC, NTP or OSHA carcinogen. Increased susceptibility to the effects of this material may be observed in people with preexisting disease of any of the following: central nervous system, kidneys, liver, lungs. Recurrent overexposure may result in liver and kidney injury. Studies in laboratory animals have shown reproductive, embryotoxic and developmental effects. WARNING: This chemical is known to the State of California to cause cancer.

Ethylene glycol monobutyl ether

Increased susceptibility to the effects of this material may be observed in people with preexisting disease of any of the following: bone marrow, central nervous system, eyes, gastrointestinal system, kidneys, liver, respiratory system, skin. May cause injury to the kidneys, liver, blood and/or bone marrow. Repeated overexposure may result in damage to the blood. Eye contact may cause corneal injury. If absorbed through the skin, may be: harmful.

Ethylene glycol monobutyl ether acetate

May destroy red blood cells. May cause abnormal kidney function. May cause temporary upper respiratory and/or lung irritation with cough, difficult breathing, or shortness of breath. The following medical conditions may be aggravated by exposure: central nervous system, gastrointestinal system, kidneys, liver, dermatitis. Can be absorbed through the skin in harmful amounts. Overexposure may cause damage to any of the following organs/systems: blood, kidneys, liver. Ingestion may cause headache, nausea, vomiting, dizziness, and drowsiness.

Heptane

Increased susceptibility to the effects of this material may be observed in people with preexisting disease of any of the following: central nervous system, respiratory system, skin. May cause central nervous system effects such as dizziness, headache, nausea, and loss of consciousness. Laboratory studies with rats have shown that petroleum distillates can cause kidney damage and kidney or liver tumors. These effects were not seen in similar studies with guinea pigs, dogs, or monkeys. Several studies evaluating petroleum workers have not shown a significant increase of kidney damage or an increase in kidney or liver tumors. Aspiration may occur during swallowing or vomiting, resulting in lung damage.

Hydrotreated heavy naphtha (petroleum)-A

Laboratory studies with rats have shown that petroleum distillates can cause kidney damage and kidney or liver tumors. These effects were not seen in similar studies with guinea pigs, dogs, or monkeys. Several studies evaluating petroleum workers have not shown a significant increase of kidney damage or an increase in kidney or liver tumors.

Copyright 2014, Axalta Coating Systems, LLC and all affiliates. All rights reserved. Copies may be made only for those using Axalta Coating Systems products.

Hydrotreated heavy naphtha (petroleum)-B
Laboratory studies with rats have shown that petroleum distillates can cause kidney damage and kidney or liver tumors. These effects were not seen in similar studies with guinea pigs, dogs, or monkeys. Several studies evaluating petroleum workers have not shown a significant increase of kidney damage or an increase in kidney or liver tumors.

Isopropyl alcohol
The following medical conditions may be aggravated by exposure: dermatitis, respiratory disease. Developmental toxicity was seen in rat's offspring at doses that were maternally toxic. Contact may cause skin irritation with discomfort or rash. Can be absorbed through the skin in harmful amounts. Contact will cause moderate to severe redness and swelling, itching, tingling sensation, painful burning. May cause injury to the cornea of the eyes. Prolonged or repeated exposure may cause damage to any of the following organs/systems: liver. Ingestion studies on laboratory animals showed that very high oral doses caused increased liver and kidney weights. Aspiration may occur during swallowing or vomiting, resulting in lung damage. May cause central nervous system depression with headache, stupor, uncoordinated or strange behavior, or unconsciousness. Irritating to the mouth, throat and stomach. May cause irritation of the respiratory tract, experienced as nasal discomfort and discharge, coughing and possibly accompanied by chest pain. Prolonged or repeated skin contact may cause drying, cracking, or irritation. Ingestion may cause headache, nausea, vomiting, dizziness, and drowsiness. Swallowing significant amounts of substance could cause serious injury, even death.

Methyl alcohol
Increased susceptibility to the effects of this material may be observed in people with preexisting disease of any of the following: eyes, kidneys, liver, skin. Excessive human exposure to methanol may lead to: fatigue, headache, anaesthetic, neurologic effects, and visual difficulties including blindness or death. Recurrent overexposure may result in liver and kidney injury. Ingestion may cause any of the following: blindness. Eye contact may cause any of the following: conjunctivitis, mild irritation, corneal opacity. Studies in laboratory animals have shown embryotoxic and developmental effects. WARNING: This chemical is known to the State of California to cause birth defects or other reproductive harm.

N-butyl alcohol
May cause abnormal blood forming function with anemia. Liquid splashes in the eye may result in chemical burns.

Naphthalene
Is an IARC, NTP or OSHA carcinogen. Tests in some laboratory animals demonstrate carcinogenic activity. Increased susceptibility to the effects of this material may be observed in people with preexisting disease of any of the following: kidneys, liver. Recurrent overexposure may result in liver and kidney injury. WARNING: This chemical is known to the State of California to cause cancer.

Propylene glycol monomethyl ether acetate
Recurrent overexposure may result in liver and kidney injury.

Toluene
Increased susceptibility to the effects of this material may be observed in people with preexisting disease of any of the following: central nervous system, kidneys, liver, respiratory system, skin. Can be absorbed through the skin in harmful amounts. Recurrent overexposure may result in liver and kidney injury. High airborne levels have produced irregular heart beats in animals and occasional palpitations in humans. Rats exposed to very high airborne levels have exhibited high frequency hearing deficits. The significance of this to man is unknown. WARNING: This chemical is known to the State of California to cause birth defects or other reproductive harm.

Vm&p naphtha
Increased susceptibility to the effects of this material may be observed in people with preexisting disease of any of the following: central nervous system, kidneys, liver, lungs, respiratory system, skin. This substance may cause damage to any of the following organs/systems: central nervous system, kidneys, liver, lungs, skin and eyes. Material may be harmful or fatal if swallowed.

Xylene
Increased susceptibility to the effects of this material may be observed in people with preexisting disease of any of the following: bone marrow, cardiovascular system, central nervous system, kidneys, liver, lungs. Recurrent overexposure may result in liver and kidney injury. High exposures may produce irregular heart beats. Canada classifies Xylene as a developmental toxin as high exposures to xylenes in some animal studies have been reported to cause health effects on the developing fetus/embryo. These effects were often at levels toxic to the adult animal. The significance of these effects to humans is not known. Repeated or prolonged skin contact may cause any of the following: irritation, dryness, cracking of the skin.

4. First aid measures

First Aid Procedures:

Inhalation:
If affected by inhalation of vapor or spray mist, move to fresh air. If not breathing, give artificial respiration, preferably mouth-to-mouth. If breathing difficulty persists, or occurs later, consult a physician.

Ingestion:
In the unlikely event of ingestion, DO NOT INDUCE VOMITING. Call a physician immediately and have names of ingredients available.

Skin or eye contact:
In case of eye contact, immediately flush with plenty of water for at least 15 minutes; call a physician. In case of skin contact, wash thoroughly with soap and water. If irritation occurs, contact a physician.

5. Firefighting measures

Flash Point (Closed Cup):
See Section 11 for exact values.

Flammable Limits: LFL 0.5 % UFL 36.5 %

Copyright 2014, Axalta Coating Systems, LLC and all affiliates. All rights reserved. Copies may be made only for those using Axalta Coating Systems products.

Extinguishing Media:
Universal aqueous film-forming foam, carbon dioxide, dry chemical.

Fire Fighting Procedures:
Full protective equipment, including self-contained breathing apparatus, is recommended. Water from fog nozzles may be used to prevent pressure build-up.

Fire and Explosion Hazards:
For flammable liquids, vapor/air will ignite when an ignition source is present. In other cases, when heated above the flash point, emits flammable vapors which, when mixed with air, can burn or be explosive. Fine mists or sprays may be flammable at temperatures below the flash point.

6. Accidental release measures

Procedures for cleaning up spills or leaks:
Ventilate area. Remove sources of ignition. Prevent skin and eye contact and breathing of vapor. If material does not contain or is not mixed with an isocyanate activator/hardener: Wear a properly fitted air-purifying respirator with organic vapor cartridges (NIOSH approved TC-23C), eye protection, gloves and protective clothing. Confine, remove with inert absorbent, and dispose of properly.

Ecological information:
There is no data available on the product. The product should not be allowed to enter drains, water courses or the soil.

7. Handling and storage

Precautions to be taken in handling and storing:
Observe label precautions. If combustible (flashpoint between 38-93 deg C or 100 - 200 deg F), keep away from heat, sparks and flame. If flammable (flashpoint less than 38 deg C or 100 deg F), also keep away from static discharges and other sources of ignition. If material is extremely flammable (flashpoint less than - 8 deg C or 20 deg F) or flammable, VAPORS MAY IGNITE EXPLOSIVELY OR CAUSE FLASH FIRE, respectively. Vapors may spread long distances. Prevent buildup of vapors. Close container after each use. Ground containers when pouring. Wash thoroughly after handling and before eating or smoking. Do not store above 49 deg C or 120 deg F. If product is waterbased, do not freeze.

Other precautions:
If material is a coating: do not sand, flame cut, braze or weld dry coating without a NIOSH approved air purifying respirator with particulate filters or appropriate ventilation, and gloves. Combustible dust clouds may be created where operations produce fine material (dust). Avoid formation of significant deposits of material as they may become airborne and form combustible dust clouds. Handling and processing operations should be conducted in accordance with best practices (e.g.NFPA-654).

8. Exposure controls/personal protection

Ventilation:
Provide sufficient ventilation in volume and pattern to keep contaminants below applicable exposure limits.

Respiratory protection:
Do not breathe vapors or mists. Wear a properly fitted air-purifying respirator with organic vapor cartridges (NIOSH approved TC-23C) and particulate filter (NIOSH TC-84A) during application and until all vapors and spray mists are exhausted. In confined spaces, or in situations where continuous spray operations are typical, or if proper air-purifying respirator fit is not possible, wear a positive pressure, supplied-air respirator (NIOSH TC-19C). In all cases, follow respirator manufacturer's directions for respirator use. Do not permit anyone without protection in the painting area.

Protective equipment:
Personal protective equipment should be worn to prevent contact with eyes, skin or clothing.

Skin and body protection:
Neoprene gloves and coveralls are recommended.
Desirable in all industrial situations. Goggles are preferred to prevent eye irritation. If safety glasses are substituted, include splash guard or side shields.

9. Physical and chemical properties

Evapouration rate	Slower than Ether
Water solubility	NIL
Vapour density	Heavier than air
Approx. Boiling Range (°C)	56 – 154 °C
Approx. Freezing Range (°C)	-134 – -65 °C
Gallon Weight (lbs/gal)	6.06711 - 9.11318
Specific Gravity	0.73 - 1.09
Percent Volatile By Volume	99.86 - 100.00
Percent Volatile By Weight	0.00 - 100.00
Percent Solids By Volume	0.00 - 0.14
Percent Solids By Weight	0.00 - 0.14

10. Stability and reactivity

Stability:
Stable

Incompatibility (materials to avoid):
None reasonably foreseeable

Copyright 2014, Axalta Coating Systems, LLC and all affiliates. All rights reserved. Copies may be made only for those using Axalta Coating Systems products.

Hazardous decomposition products:
CO, CO2, smoke, and oxides of any heavy metals that are reported in “Composition, Information on Ingredients” section.

Hazardous Polymerization:
Will not occur.

Sensitivity to Static Discharge:
For flammable materials (flashpoint less than 38 deg C or 100 deg F) and combustibles (flashpoint between 38- 93 deg C or 100-200 deg F) if heated above the flashpoint, solvent vapors in air may explode if static grounding and bonding is not used during transfer of this product.

Sensitivity to Mechanical Impact:
None known.

11. Additional Information

105™ Acetone, Ethylbenzene(2.0%*@), Methyl alcohol(50%*@), Toluene(19%*@), Vm&p naphtha, Xylene(8%*@) **GAL WT: 6.78 WT PCT SOLIDS: 0.00 VOL PCT SOLIDS: 0.00 SOLVENT DENSITY: 6.78 VOC LE: 6.8 VOC AP: 5.4 FLASH POINT: 20 °F to below 73 °F H: 2 F: 3 R: 0 OSHA STORAGE: IB TSCA STATUS: In Compliance PHOTOCHEMICALLY REACTIVE: YES**

106™ Acetone, Ethylbenzene(0.8%*@), Methyl alcohol(20%*@), Toluene(30%*@), Vm&p naphtha, Xylene(3%*@) **GAL WT: 6.78 WT PCT SOLIDS: 0.00 VOL PCT SOLIDS: 0.00 SOLVENT DENSITY: 6.78 VOC LE: 6.9 VOC AP: 4.4 FLASH POINT: Below 20 °F H: 2 F: 3 R: 0 OSHA STORAGE: IB TSCA STATUS: In Compliance PHOTOCHEMICALLY REACTIVE: YES**

107™ Acetone, Vm&p naphtha **GAL WT: 6.60 WT PCT SOLIDS: 0.00 VOL PCT SOLIDS: 0.00 SOLVENT DENSITY: 6.60 VOC LE: 6.2 VOC AP: 0.2 FLASH POINT: Below 20 °F H: 2 F: 3 R: 0 OSHA STORAGE: IB TSCA STATUS: In Compliance PHOTOCHEMICALLY REACTIVE: NO**

130™ Acetone **GAL WT: 6.61 WT PCT SOLIDS: 0.00 VOL PCT SOLIDS: 0.00 SOLVENT DENSITY: 6.61 VOC LE: 0.0 VOC AP: 0.0 FLASH POINT: Below 20 °F H: 2 F: 3 R: 0 OSHA STORAGE: IB TSCA STATUS: In Compliance PHOTOCHEMICALLY REACTIVE: NO**

139™ 4-chlorobenzotrifluoride, Hydrotreated heavy naphtha (petroleum)-B **GAL WT: 9.11 WT PCT SOLIDS: 0.00 VOL PCT SOLIDS: 0.00 SOLVENT DENSITY: 9.11 VOC LE: 6.6 VOC AP: 2.9 FLASH POINT: 73 °F to below 100 °F H: 2 F: 3 R: 1 OSHA STORAGE: IC TSCA STATUS: In Compliance PHOTOCHEMICALLY REACTIVE: NO**

2319S™ Acetic acid, Isopropyl alcohol, Water **GAL WT: 6.94 WT PCT SOLIDS: 0.00 VOL PCT SOLIDS: 0.00 SOLVENT DENSITY: 6.93 VOC LE: 6.7 VOC AP: 5.5 FLASH POINT: 20 °F to below 73 °F H: 2 F: 3 R: 0 OSHA STORAGE: IB TSCA STATUS: In Compliance PHOTOCHEMICALLY REACTIVE: NO**

2320S™ Isopropyl alcohol, Methyl amyl ketone, Vm&p naphtha **GAL WT: 6.54 WT PCT SOLIDS: 0.00 VOL PCT SOLIDS: 0.00 SOLVENT DENSITY: 6.55 VOC LE: 6.5 VOC AP: 6.5 FLASH POINT: 20 °F to below 73 °F H: 2 F: 3 R: 0 OSHA STORAGE: IB TSCA STATUS: In Compliance PHOTOCHEMICALLY REACTIVE: NO**

3602S™ 1,2,4-trimethyl benzene(2%*), Acetone, Aromatic hydrocarbon-B, Cumene(0.1%*@), Ethyl 3-ethoxy propionate, Heptane, Isopropyl alcohol, Methyl alcohol(4%*@), Methyl isoamyl ketone, N-butyl alcohol(17%*), Toluene(8%*@), Vm&p naphtha **GAL WT: 6.64 WT PCT SOLIDS: 0.00 VOL PCT SOLIDS: 0.00 SOLVENT DENSITY: 6.64 VOC LE: 6.6 VOC AP: 5.4 FLASH POINT: Below 20 °F H: 2 F: 3 R: 0 OSHA STORAGE: IB TSCA STATUS: In Compliance PHOTOCHEMICALLY REACTIVE: NO**

3608S™ 1,2,4-trimethyl benzene(2%*), Acetone, Aromatic hydrocarbon-B, Cumene(0.1%*@), Ethyl 3-ethoxy propionate, Heptane, Isopropyl alcohol, Methyl alcohol(4%*@), Toluene(13%*@) **GAL WT: 6.57 WT PCT SOLIDS: 0.00 VOL PCT SOLIDS: 0.00 SOLVENT DENSITY: 6.57 VOC LE: 6.6 VOC AP: 4.6 FLASH POINT: Below 20 °F H: 2 F: 3 R: 0 OSHA STORAGE: IB TSCA STATUS: In Compliance PHOTOCHEMICALLY REACTIVE: NO**

3613S™ Acetone, Heptane, Isopropyl alcohol, Methyl alcohol(4%*@), Toluene(22%*@) **GAL WT: 6.60 WT PCT SOLIDS: 0.00 VOL PCT SOLIDS: 0.00 SOLVENT DENSITY: 6.60 VOC LE: 6.6 VOC AP: 3.2 FLASH POINT: Below 20 °F H: 2 F: 3 R: 0 OSHA STORAGE: IB TSCA STATUS: In Compliance PHOTOCHEMICALLY REACTIVE: YES**

3661S™ Acetone, Aromatic hydrocarbon-A, Cumene(0.1%*@), Ethyl 3-ethoxy propionate, Heptane, Isopropyl alcohol, Methyl alcohol(4%*@), N-butyl alcohol(6%*), Naphthalene(0.5%*@), Toluene(13%*@), Vm&p naphtha **GAL WT: 6.61 WT PCT SOLIDS: 0.00 VOL PCT SOLIDS: 0.00 SOLVENT DENSITY: 6.61 VOC LE: 6.6 VOC AP: 5.1 FLASH POINT: Below 20 °F H: 2 F: 3 R: 0 OSHA STORAGE: IB TSCA STATUS: In Compliance PHOTOCHEMICALLY REACTIVE: NO**

3696S™ 1,2,4-trimethyl benzene(2%*), Acetone, Aromatic hydrocarbon-B, Cumene(0.1%*@), Dimethyl glutarate, Ethyl 3-ethoxy propionate, Heptane, Isopropyl alcohol, Methyl alcohol(4%*@), Methyl isoamyl ketone, Toluene(9%*@) **GAL WT: 6.63 WT PCT SOLIDS: 0.00 VOL PCT SOLIDS: 0.00 SOLVENT DENSITY: 6.63 VOC LE: 6.6 VOC AP: 5.4 FLASH POINT: 20 °F to below 73 °F H: 2 F: 3 R: 1 OSHA STORAGE: IB TSCA STATUS: In Compliance PHOTOCHEMICALLY REACTIVE: NO**

3900S™ 1,2,4-trimethyl benzene(8%*), 1,3,5-trimethyl benzene, 2,2,4-trimethylpentane(1%@), Aromatic hydrocarbon-B, Cumene(0.4%*@), Heptane, Hydrotreated heavy naphtha (petroleum)-B, Isopropyl alcohol, Toluene(1%*@), Vm&p naphtha **GAL WT: 6.49 WT PCT SOLIDS: 0.00 VOL PCT SOLIDS: 0.00 SOLVENT DENSITY: 6.49 VOC LE: 6.5 VOC AP: 6.5 FLASH POINT: 20 °F to below 73 °F H: 2 F: 3 R: 0 OSHA STORAGE: IB TSCA STATUS: In Compliance PHOTOCHEMICALLY REACTIVE: YES**

3901S™ Cyclohexane, methyl-, Heptane, Toluene(12%*@), Vm&p naphtha **GAL WT: 6.07 WT PCT SOLIDS: 0.00 VOL PCT SOLIDS: 0.00 SOLVENT DENSITY: 6.07 VOC LE: 6.1 VOC AP: 6.1 FLASH POINT: 20 °F to below 73 °F H: 2 F: 3 R: 0 OSHA STORAGE: IB TSCA STATUS: In Compliance PHOTOCHEMICALLY REACTIVE: NO**

3909S™ Alkyloxy polyethylene oxyethanol, Dimethyl glutarate, Ethylene glycol monobutyl ether(3%*), Water **GAL WT: 8.31 WT PCT SOLIDS: 0.03 VOL PCT SOLIDS: 0.03 SOLVENT DENSITY: 8.32 VOC LE: 8.2 VOC AP: 0.5 FLASH POINT: Above 200 °F H: 0 F: 1 R: 0 OSHA STORAGE: IIIB TSCA STATUS: In Compliance**

Copyright 2014, Axalta Coating Systems, LLC and all affiliates. All rights reserved. Copies may be made only for those using Axalta Coating Systems products.

PHOTOCHEMICALLY REACTIVE: NO

3919S™ 1,2,4-trimethyl benzene(1%*), Cumene(0.2%*@), Ethylbenzene(0.2%*@), Hydrotreated heavy naphtha (petroleum)-A, Hydrotreated heavy naphtha (petroleum)-B **GAL WT: 6.51 WT PCT SOLIDS: 0.00 VOL PCT SOLIDS: 0.00 SOLVENT DENSITY: 6.51 VOC LE: 6.5 VOC AP: 6.5 FLASH POINT: 73 °F to below 100 °F H: 2 F: 3 R: 0 OSHA STORAGE: IC TSCA STATUS: In Compliance PHOTOCHEMICALLY REACTIVE: YES**

3924S™ Acetone, Heptane, Isopropyl alcohol, Toluene(23%*@) **GAL WT: 6.44 WT PCT SOLIDS: 0.00 VOL PCT SOLIDS: 0.00 SOLVENT DENSITY: 6.44 VOC LE: 6.4 VOC AP: 4.5 FLASH POINT: Below 20 °F H: 2 F: 3 R: 0 OSHA STORAGE: IB TSCA STATUS: In Compliance PHOTOCHEMICALLY REACTIVE: YES**

3939S™ 1,2,4-trimethyl benzene(2%*), Aromatic hydrocarbon-B, Cumene(0.2%*@), Ethylbenzene(0.2%*@), Heptane, Hydrotreated heavy naphtha (petroleum)-B, Naphthalene(0.1%*@), Toluene(8%*@) **GAL WT: 6.49 WT PCT SOLIDS: 0.00 VOL PCT SOLIDS: 0.00 SOLVENT DENSITY: 6.49 VOC LE: 6.5 VOC AP: 6.5 FLASH POINT: 20 °F to below 73 °F H: 2 F: 3 R: 0 OSHA STORAGE: IB TSCA STATUS: In Compliance PHOTOCHEMICALLY REACTIVE: NO**

3949S™ Aliphatic hydrocarbon/aliphatic ester/surf, Water **GAL WT: 8.25 WT PCT SOLIDS: 0.14 VOL PCT SOLIDS: 0.14 SOLVENT DENSITY: 8.25 VOC LE: 6.9 VOC AP: 0.4 FLASH POINT: Above 200 °F H: 0 F: 1 R: 0 OSHA STORAGE: IIIB TSCA STATUS: In Compliance PHOTOCHEMICALLY REACTIVE: NO**

3979S™ Aliphatic hydrocarbon, Aromatic hydrocarbon-A, Cumene(0.1%*@), Ethylene glycol monobutyl ether acetate(30%*@), Naphthalene(0.5%*@), Propylene glycol monomethyl ether acetate **GAL WT: 7.78 WT PCT SOLIDS: 0.00 VOL PCT SOLIDS: 0.00 SOLVENT DENSITY: 7.78 VOC LE: 7.8 VOC AP: 7.8 FLASH POINT: 100 °F - 141 °F H: 2 F: 2 R: 0 OSHA STORAGE: II TSCA STATUS: In Compliance PHOTOCHEMICALLY REACTIVE: NO**

50™ Acetone, Ethylbenzene(0.8%*@), Methyl alcohol(20%*@), Toluene(30%*@), Vm&p naphtha, Xylene(3%*@) **GAL WT: 6.78 WT PCT SOLIDS: 0.00 VOL PCT SOLIDS: 0.00 SOLVENT DENSITY: 6.78 VOC LE: 6.9 VOC AP: 4.4 FLASH POINT: Below 20 °F H: 2 F: 3 R: 0 OSHA STORAGE: IB TSCA STATUS: In Compliance PHOTOCHEMICALLY REACTIVE: YES**

PS3909S™ Alkyloxy polyethylene oxyethanol, Dimethyl glutarate, Ethylene glycol monobutyl ether(3%*), Water **GAL WT: 8.31 WT PCT SOLIDS: 0.03 VOL PCT SOLIDS: 0.03 SOLVENT DENSITY: 8.32 VOC LE: 8.2 VOC AP: 0.5 FLASH POINT: Above 200 °F H: 0 F: 1 R: 0 OSHA STORAGE: IIIB TSCA STATUS: In Compliance PHOTOCHEMICALLY REACTIVE: NO**

PS3970S™ Cyclohexane, methyl-, Ethylbenzene(0.1%*@), Heptane, Hydrotreated heavy naphtha (petroleum)-B, Toluene(12%*@), Vm&p naphtha **GAL WT: 6.18 WT PCT SOLIDS: 0.00 VOL PCT SOLIDS: 0.00 SOLVENT DENSITY: 6.18 VOC LE: 6.2 VOC AP: 6.2 FLASH POINT: 20 °F to below 73 °F H: 2 F: 3 R: 0 OSHA STORAGE: IB TSCA STATUS: In Compliance PHOTOCHEMICALLY REACTIVE: NO**

PS3990S™ 1,2,4-trimethyl benzene(1%*), Cumene(0.2%*@), Ethylbenzene(0.2%*@), Heptane, Hydrotreated heavy naphtha (petroleum)-B, Toluene(13%*@), Vm&p naphtha **GAL WT: 6.41 WT PCT SOLIDS: 0.00 VOL PCT SOLIDS: 0.00 SOLVENT DENSITY: 6.41 VOC LE: 6.4 VOC AP: 6.4 FLASH POINT: 20 °F to below 73 °F H: 2 F: 3 R: 0 OSHA STORAGE: IB TSCA STATUS: In Compliance PHOTOCHEMICALLY REACTIVE: NO**

TP20212™ 4-chlorobenzotrifluoride, Hydrotreated heavy naphtha (petroleum)-B **GAL WT: 9.11 WT PCT SOLIDS: 0.00 VOL PCT SOLIDS: 0.00 SOLVENT DENSITY: 9.11 VOC LE: 6.6 VOC AP: 2.9 FLASH POINT: 73 °F to below 100 °F H: 2 F: 3 R: 1 OSHA STORAGE: IC TSCA STATUS: In Compliance PHOTOCHEMICALLY REACTIVE: NO**

TP33364™ Acetone, N-butyl alcohol(22%*), Vm&p naphtha **GAL WT: 6.63 WT PCT SOLIDS: 0.00 VOL PCT SOLIDS: 0.00 SOLVENT DENSITY: 6.63 VOC LE: 6.6 VOC AP: 1.7 FLASH POINT: Below 20 °F H: 2 F: 3 R: 0 OSHA STORAGE: IB TSCA STATUS: In Compliance PHOTOCHEMICALLY REACTIVE: NO**

V-3921S™ Acetone, Ethylene glycol monobutyl ether(1%*), Water **GAL WT: 8.01 WT PCT SOLIDS: 0.01 VOL PCT SOLIDS: 0.01 SOLVENT DENSITY: 8.01 VOC LE: 8.2 VOC AP: 0.2 FLASH POINT: 20 °F to below 73 °F H: 2 F: 3 R: 0 OSHA STORAGE: IB TSCA STATUS: In Compliance PHOTOCHEMICALLY REACTIVE: NO**

Footnotes:
TSCA: in compliance In compliance with TSCA Inventory requirements for commercial purposes.
ACGIH American Conference of Governmental Industrial Hygienists.
IARC International Agency for Research on Cancer.
NTP National Toxicology Program.
OSHA Occupational Safety and Health Administration.
PNOR Particles not otherwise regulated.
PNOC Particles not otherwise classified.
STEL Short term exposure limit.
TWA Time-weighted average.

* VOC less exempt (theoretical) and VOC as packaged (theoretical) are based upon the VOC of the packaged material at the point of manufacture.
All products denoted with TM or R are trademarks or registered trademarks of Axalta Coating Systems, LLC and all affiliates.
***** = Section 313 Supplier Notification: These chemicals are subject to the reporting requirements of Section 313 of the Emergency planning and Right-to-Know act of 1986 and of 40 CFR 372.
@ = Listed as a Clean Air Act Hazardous Air Pollutant.
# = EPCRA Section 302 - Extremely hazardous substances.

Notice:
The information on this Material Safety Data Sheet relates only to the specific material designated herein and does not relate to use in combination with any other material or in any process.
Product Manager: Refinish Sales
Prepared by: Y. B. Yarbrough

Copyright 2014, Axalta Coating Systems, LLC and all affiliates. All rights reserved. Copies may be made only for those using Axalta Coating Systems products.

(M)SDS Format : ANSI

PDF for Print | Print | E-mail

SAINT-GOBAIN

View (M)SDS Section : 1 2 3 4 5 6 7 8 9 10 11 12 13 14 15 16

SECTION 1 : PRODUCT AND COMPANY IDENTIFICATION

NFPA

0
0 1

Product Name:	**Vitrified Abrasive Product**
MSDS Manufacturer Number:	983593_BA_Vit
Manufacturer Name:	Saint-Gobain Abrasives, Inc.
Address:	1 New Bond Street Worcester, MA 01615
Website:	www.Nortonabrasives.com
General Phone Number:	508-795-5000
Emergency Phone Number:	508-795-5000

HMIS

Health Hazard	**1**
Fire Hazard	**0**
Reactivity	**1**
Personal Protection	**X**

SECTION 2 : COMPOSITION/INFORMATION ON INGREDIENTS

Chemical Name	CAS#	Ingredient Percent	EC Num.
Silicon carbide	409-21-2	60 - 100 by weight	206-991-8
Amorphous Silica, Fused	60676-86-0	10 - 30 by weight	262-373-8

SECTION 3 : HAZARDS IDENTIFICATION

Potential Health Effects:

Eye:	Dust may cause slight irritation.
Skin:	Dust from this product may cause temporary mechanical irritation.
Inhalation:	Dusts from this product may cause mechanical irritation of the nose, throat and respiratory tract.
Ingestion:	Ingestion of this product is unlikely. However, ingestion of product may produce gastrointestinal irritation and disturbances.
Chronic Health Effects:	May affect breathing capacity.

SECTION 4 : FIRST AID MEASURES

Eye Contact:	Immediately flush eyes with plenty of water for at least 15 to 20 minutes. Ensure adequate flushing of the eyes by separating the eyelids with fingers. Get medical attention, if irritation or symptoms of overexposure persists.
Skin Contact:	Immediately wash skin with soap and plenty of water. Get medical attention if irritation develops or persists.
Inhalation:	If dust from cutting or drilling is inhaled, remove the affected person to fresh air. If symptoms persist, get medical attention.
Ingestion:	Accidental ingestion of this material is unlikely. If this does occur, watch person for several days to make sure intestinal blockage does not occur. If symptoms persist, call a physician.
Note to Physicians:	No information available.

SECTION 5 : FIRE FIGHTING MEASURES

Flammable Properties:	Non Flammable.
Flash Point:	Does not apply.
Auto Ignition Temperature:	Not determined.
Lower Flammable/Explosive Limit:	Not available.
Upper Flammable/Explosive Limit:	Not available.
Extinguishing Media:	Use any extinguishing media appropriate for the surrounding fires.
Unsuitable Media:	None.
Protective Equipment:	As in any fire, wear self-contained breathing apparatus pressure-demand, MSHA/NIOSH (approved or equivalent) and full protective gear.

NFPA Ratings:

NFPA Health:	0
NFPA Flammability:	0
NFPA Reactivity:	1
NFPA Other:	

SECTION 6 : ACCIDENTAL RELEASE MEASURES

Methods for containment:	Containment of this material should not be necessary.
Methods for cleanup:	Shovel or sweep up for re-use or disposal. Avoid creating dusty conditions. Evaluate residue to determine if it is a hazardous waste by characteristic. Dispose of in accordance with Local, State, Federal and Provincial regulations.

SECTION 7 : HANDLING and STORAGE

Handling:	Always HANDLE AND STORE wheels in a CAREFUL manner. Always VISUALLY INSPECT all wheels before mounting. Always CHECK MACHINE SPEED against the established maximum safe operating speed MARKED ON THE WHEEL. Always CHECK MOUNTING FLANGES for equal and correct diameter. Always USE MOUNTING BLOTTERS. Always be sure WORK REST is properly adjusted. Always USE A SAFETY GUARD covering at least one-half of the grinding wheel. Always allow NEWLY MOUNTED WHEELS to run at operating speed, with guard in place, for at least one minute before grinding. Always TURN OFF COOLANT before stopping wheel to avoid creating an out-of-balance wheel.
Storage:	No special storage conditions required.
Hygiene Practices:	Wear suitable gloves and eye/face protection.

SECTION 8 : EXPOSURE CONTROLS, PERSONAL PROTECTION - EXPOSURE GUIDELINES

Engineering Controls:	General dilution ventilation and/or local exhaust ventilation should be provided as necessary to maintain exposures below occupational exposure limits.
Eye/Face Protection:	Always WEAR SAFETY GLASSES or some type of eye protection when grinding.
Skin Protection Description:	Protective gloves. Long sleeved shirt and long pants.
Respiratory Protection:	When workers are facing airborne particulate/dust concentrations above the exposure limit they must use appropriate certified respirators. A properly fitted NIOSH approved disposable N 95 type dust respirator or better is recommended.
Other Protective:	Use of this product may create elevated sound levels. Hearing protection should be worn where required (see OSHA 29 CFR 1910.134 and other applicable regulations).
General Hygiene Considerations:	Handle in accordance with good industrial hygiene and safety practice. Remove and wash contaminated clothing before re-use. Avoid getting dust into boots and gloves through wrist bands and pant tucks.

EXPOSURE GUIDELINES

Ingredient	Guideline OSHA	Guideline NIOSH	Guideline ACGIH	Quebec Canada	Ontario Canada
Silicon carbide	PEL-TWA: 15 mg/m3 Total particulate/dust (T) PEL-TWA: 5 mg/m3 Respirable fraction (R)		TLV-TWA: 10 mg/m3 Inhalable fraction (I) TLV-TWA: 3 mg/m3 Respirable fraction (R) TLV-TWA: 0.1 f/cc Respirable fraction (R)	VEMP-TWA: 10 mg/m3 Total particulate/dust (T)	OEL-TWAEV: 10 mg/m3 Total particulate/dust (T) OEL-TWAEV: 3 mg/m3 Respirable fraction (R) OEL-TWAEV: 10 mg/m3 Inhalable fraction (I) OEL-TWAEV: 0.1 f/cc Respirable fraction (R)
Amorphous Silica, Fused	OSHA PEL-TWA 0.1 mg/m3	REL-TWA: 0.05 mg/m3 (Respirable)	ACGIH TLV-TWA 0.1 mg/m3	VEMP-TWA: 0.1 mg/m3 Respirable fraction (R)	OEL-TWAEV: 0.1 mg/m3 Respirable fraction (R)

Ingredient	Alberta Canada	Mexico	British Columbia Canada		
Silicon carbide	OEL-TWA: 10 mg/m3	LMPE-PPT: 10 mg/m3 LMPE-CT: 20 mg/m3	OEL-TWA: 10 mg/m3 Inhalable fraction (I) OEL-TWA: 3 mg/m3 Respirable fraction (R) OEL-TWA: 0.1 f/cc Respirable fraction (R)		
Amorphous Silica, Fused	OEL-TWA: 0.1 mg/m3 Respirable fraction (R)	MPE-PPT: 0.1 mg/m3 Respirable fraction (R)			

SECTION 9 : PHYSICAL and CHEMICAL PROPERTIES

Physical State Appearance:	Solid article.
Odor:	Odorless.
Flash Point:	Does not apply.
Auto Ignition Temperature:	Not determined.

SECTION 10 : STABILITY and REACTIVITY

Chemical Stability:	Stable under normal conditions.
Hazardous Polymerization:	Hazardous polymerization does not occur.
Special Decomposition Products:	In use, dust and decomposing odors may be generated. In most cases, the material removed from the workplace will be significantly greater than the grinding wheel components. Coolants may produce other decomposition products.

SECTION 11 : TOXICOLOGICAL INFORMATION

Acute Toxicity:	This product has not been tested for its toxicity.

Carcinogens:							
	ACGIH	NIOSH	OSHA	IARC	NTP		
Silicon carbide	Not listed						

Amorphous Silica, Fused	No Data	NIOSH carcinogen	No Data	No Data	No Data		

Silicon carbide :

RTECS Number: VW0450000

Inhalation: No Data

Amorphous Silica, Fused :

RTECS Number: VV7328000

Inhalation: Inhalation - Rat TCLo: 197 mg/m3/6H/26W (Intermittent) [Lungs, Thorax, or Respiration - Changes in lung weight] (RTECS)

SECTION 12 : ECOLOGICAL INFORMATION

Biodegradation: No environmental information found for this product.

SECTION 13 : DISPOSAL CONSIDERATIONS

Waste Disposal: Use standard landfill methods consistent with applicable Federal, State, Provincial and local laws.

SECTION 14 : TRANSPORT INFORMATION

DOT Shipping Name: Not regulated as hazardous material for transportation.

DOT UN Number: Not regulated as hazardous material for transportation.

IATA Shipping Name: Not regulated as hazardous material for transportation.

Canadian Shipping Name: This product is Not Regulated under the Transportation of Dangerous Goods Act. (CAN).

SECTION 15 : REGULATORY INFORMATION

Silicon carbide :

TSCA Inventory Status: Listed

Massachusetts: Listed

Pennsylvania: Listed

Canada DSL: Listed

EC Number: 206-991-8

Amorphous Silica, Fused :

TSCA Inventory Status: Listed

EINECS Number: 262-373-8

Massachusetts: Listed

Rhode Island: Listed

Canada DSL: Listed

Canada IDL: Identified under the Canadian Hazardous Products Act Ingredient Disclosure List: 0.1%.1404(1487)

EC Number: 262-373-8

SECTION 16 : ADDITIONAL INFORMATION

MSDS Creation Date:	December 15, 2010
MSDS Revision Date:	July 01, 2013
SDS Format:	ANSI

Copyright© 1996-2015 Actio Corporation. All Rights Reserved.

(M)SDS Format : ANSI

PDF for Print | Print | E-mail

SAINT-GOBAIN

View (M)SDS Section : 1 2 3 4 5 6 7 8 9 10 11 12 13 14 15 16

SECTION 1 : PRODUCT AND COMPANY IDENTIFICATION

NFPA

0

1 1

Product Name:	**Super Abrasive**
MSDS Manufacturer Number:	SAAII
Manufacturer Name:	Saint-Gobain Abrasives, Inc.
Address:	1 New Bond Street Worcester, MA 01615
Website:	www.Nortonabrasives.com
General Phone Number:	508-795-5000
Emergency Phone Number:	508-795-5000

HMIS

Health Hazard	1
Fire Hazard	0
Reactivity	0
Personal Protection	X

SECTION 2 : COMPOSITION/INFORMATION ON INGREDIENTS

Chemical Name	CAS#	Ingredient Percent	EC Num.
Diamond	7782-40-3	1 - 5 by weight	
Aluminum Oxide, Non-fibrous	1344-28-1	10 - 30 by weight	215-691-6
Silicon carbide	409-21-2	1 - 5 by weight	206-991-8
Phenol formaldehyde polymer	9003-35-4	1 - 5 by weight	
Aluminum	7429-90-5	60 - 100 by weight	231-072-3

SECTION 3 : HAZARDS IDENTIFICATION

Potential Health Effects:

Eye:	Dust may cause slight irritation.
Skin:	Dust from this product may cause temporary mechanical irritation.
Inhalation:	Dusts from this product may cause mechanical irritation of the nose, throat and respiratory tract.
Ingestion:	Ingestion of this product is unlikely. However, ingestion of product may produce gastrointestinal irritation and disturbances.

Chronic Health Effects:	Chronic health effects are not expected as long as good hygiene and proper safety precautions are practiced.

Phenol formaldehyde polymer

Chronic Health Effects:	Dust generated from intended use may contain trace amounts of phenol and formaldehyde which under excessive exposure may cause skin sensitization and airway obstruction.

SECTION 4 : FIRST AID MEASURES

Eye Contact:	Immediately flush eyes with plenty of water for at least 15 to 20 minutes. Ensure adequate flushing of the eyes by separating the eyelids with fingers. Get medical attention, if irritation or symptoms of overexposure persists.
Skin Contact:	Immediately wash skin with soap and plenty of water. Get medical attention if irritation develops or persists.
Inhalation:	If dust from cutting or drilling is inhaled, remove the affected person to fresh air. If symptoms persist, get medical attention.
Ingestion:	Accidental ingestion of this material is unlikely. If this does occur, watch person for several days to make sure intestinal blockage does not occur. If symptoms persist, call a physician.
Note to Physicians:	No information available.

SECTION 5 : FIRE FIGHTING MEASURES

Flammable Properties:	Non Flammable.
Flash Point:	Does not apply.
Auto Ignition Temperature:	Not determined.
Lower Flammable/Explosive Limit:	Not available.
Upper Flammable/Explosive Limit:	Not available.
Extinguishing Media:	Use any extinguishing media appropriate for the surrounding fires.
Unsuitable Media:	None.
Protective Equipment:	As in any fire, wear self-contained breathing apparatus pressure-demand, MSHA/NIOSH (approved or equivalent) and full protective gear.

NFPA Ratings:

NFPA Health:	1
NFPA Flammability:	0
NFPA Reactivity:	1
NFPA Other:	

SECTION 6 : ACCIDENTAL RELEASE MEASURES

Methods for containment:	Containment of this material should not be necessary.
Methods for cleanup:	Shovel or sweep up for re-use or disposal. Avoid creating dusty conditions. Evaluate residue to determine if it is a hazardous waste by characteristic. Dispose of in accordance with Local, State, Federal and Provincial regulations.

SECTION 7 : HANDLING and STORAGE

Handling:	Always HANDLE AND STORE wheels in a CAREFUL manner. Always VISUALLY INSPECT all wheels before mounting. Always CHECK MACHINE SPEED against the established maximum safe operating speed MARKED ON THE WHEEL.

Storage:	No special storage conditions required.
Hygiene Practices:	Wear suitable gloves and eye/face protection.

SECTION 8 : EXPOSURE CONTROLS, PERSONAL PROTECTION - EXPOSURE GUIDELINES

Engineering Controls:	General dilution ventilation and/or local exhaust ventilation should be provided as necessary to maintain exposures below occupational exposure limits.
Eye/Face Protection:	Always WEAR SAFETY GLASSES or some type of eye protection when grinding.
Skin Protection Description:	Protective gloves. Long sleeved shirt and long pants.
Respiratory Protection:	When workers are facing airborne particulate/dust concentrations above the exposure limit they must use appropriate certified respirators. A properly fitted NIOSH approved disposable N 95 type dust respirator or better is recommended.
Other Protective:	Use of this product may create elevated sound levels. Hearing protection should be worn where required (see OSHA 29 CFR 1910.134 and other applicable regulations).
General Hygiene Considerations:	Handle in accordance with good industrial hygiene and safety practice. Remove and wash contaminated clothing before re-use. Avoid getting dust into boots and gloves through wrist bands and pant tucks.

EXPOSURE GUIDELINES

Ingredient	GERMAN MAK	Guideline OSHA	Guideline NIOSH	Guideline ACGIH	Quebec Canada
Aluminum Oxide, Non-fibrous		PEL-TWA: 5 mg/m3 Respirable fraction (R) PEL-TWA: 15 mg/m3 Total particulate/dust (T)		TLV-TWA: 10 mg/m3	VEMP-TWA: 10 mg/m3 Total particulate/dust (T)
Silicon carbide		PEL-TWA: 15 mg/m3 Total particulate/dust (T) PEL-TWA: 5 mg/m3 Respirable fraction (R)		TLV-TWA: 10 mg/m3 Inhalable fraction (I) TLV-TWA: 3 mg/m3 Respirable fraction (R) TLV-TWA: 0.1 f/cc Respirable fraction (R)	VEMP-TWA: 10 mg/m3 Total particulate/dust (T)
Aluminum	MAK-TWA: 1.5 mg/m3 Respirable fraction (R)	PEL-TWA: 15 mg/m3 Total particulate/dust (T) PEL-TWA: 5 mg/m3 Respirable fraction (R)	REL-TWA: 10 mg/m3 Total particulate/dust (T)	TLV-TWA: 1 mg/m3 Respirable fraction (R) TLV-TWA: 1 mg/m3 Respirable fraction (R) TLV-TWA: 2 mg/m3 TLV-TWA: 10 mg/m3 TLV-TWA: 5 mg/m3 TLV-TWA: 2 mg/m3	VEMP-TWA: 2 mg/m3 VEMP-TWA: 10 mg/m3 VEMP-TWA: 5 mg/m3 VEMP-TWA: 2 mg/m3 VEMP-TWA: 5 mg/m3

Ingredient	Poland	Ontario Canada	Alberta Canada	Mexico	British Columbia Canada
Aluminum Oxide, Non-fibrous		OEL-TWAEV: 10 mg/m3 Total particulate/dust (T)	OEL-TWA: 10 mg/m3	MPE-PPT: 0.1 mg/m3 Respirable fraction (R)	OEL-TWA: 3 mg/m3 Respirable fraction (R) OEL-TWA: 10 mg/m3 OEL-TWA: 10 mg/m3 Total particulate/dust (T) OEL-STEL: 20 mg/m3 Total particulate/dust (T)
Silicon carbide		OEL-TWAEV: 10 mg/m3 Total particulate/dust (T) OEL-TWAEV: 3 mg/m3 Respirable fraction (R) OEL-TWAEV: 10 mg/m3 Inhalable fraction (I) OEL-TWAEV: 0.1 f/cc Respirable fraction (R)	OEL-TWA: 10 mg/m3	LMPE-PPT: 10 mg/m3 LMPE-CT: 20 mg/m3	OEL-TWA: 10 mg/m3 Inhalable fraction (I) OEL-TWA: 3 mg/m3 Respirable fraction (R) OEL-TWA: 0.1 f/cc Respirable fraction (R)
Aluminum	MAC-TWA: 1.2 mg/m3 Respirable fraction (R)		OEL-TWA: 2 mg/m3 OEL-TWA: 10 mg/m3 OEL-TWA: 5 mg/m3 OEL-TWA: 2 mg/m3 OEL-TWA: 5 mg/m3	LMPE-PPT: 2 mg/m3 LMPE-PPT: 10 mg/m3 LMPE-PPT: 5 mg/m3 LMPE-PPT: 2 mg/m3 LMPE-PPT: 5 mg/m3	OEL-TWA: 2 mg/m3 OEL-TWA: 3 mg/m3 Respirable fraction (R) OEL-TWA: 10 mg/m3 Total particulate/dust (T) OEL-TWA: 5 mg/m3 OEL-TWA: 2 mg/m3

SECTION 9 : PHYSICAL and CHEMICAL PROPERTIES

Physical State Appearance:	Solid article.
Odor:	Odorless.

Flash Point:	Does not apply.
Auto Ignition Temperature:	Not determined.

SECTION 10 : STABILITY and REACTIVITY

Chemical Stability:	Stable under normal conditions.
Hazardous Polymerization:	Hazardous polymerization does not occur.
Conditions to Avoid:	Keep away from heat, sparks, or open flame.
Special Decomposition Products:	In use, dust and decomposing odors may be generated. In most cases, the material removed from the workplace will be significantly greater than the grinding wheel components. Coolants may produce other decomposition products.

SECTION 11 : TOXICOLOGICAL INFORMATION

Acute Toxicity:	This product has not been tested for its toxicity.

Aluminum Oxide, Non-fibrous :

NIOSH:	No Data
OSHA:	No Data
IARC:	No Data
NTP:	No Data

Aluminum Oxide, Non-fibrous :

RTECS Number:	BD1200000
Inhalation:	Inhalation - Rat TCLo: 200 mg/m3/5H/28W (Intermittent) [Lungs, Thorax, or Respiration - Structural or functional change in trachea or bronchi; Lungs, Thorax, or Respiration - Chronic pulmonary edema; Related to Chronic Data - death] (RTECS)

Silicon carbide :

RTECS Number:	VW0450000
Inhalation:	No Data

Phenol formaldehyde polymer :

RTECS Number:	SM8542500
Skin:	Administration onto the skin - Rat LD50 : >2 gm/kg [Details of toxic effects not reported other than lethal dose value] (RTECS)
Ingestion:	Oral - Rat LD50 : >5 gm/kg [Details of toxic effects not reported other than lethal dose value] (RTECS)

Aluminum :

RTECS Number:	BD1020000

SECTION 12 : ECOLOGICAL INFORMATION

Biodegradation:	In harsh environments, metal bonded products will decay similar to their metallic components.

SECTION 13 : DISPOSAL CONSIDERATIONS

Waste Disposal:	Use standard landfill methods consistent with applicable Federal, State, Provincial and local laws.

SECTION 14 : TRANSPORT INFORMATION

DOT Shipping Name:	Not regulated as hazardous material for transportation.
DOT UN Number:	Not regulated as hazardous material for transportation.
IATA Shipping Name:	Not regulated as hazardous material for transportation.
Canadian Shipping Name:	This product is Not Regulated under the Transportation of Dangerous Goods Act. (CAN).

SECTION 15 : REGULATORY INFORMATION

Inventory Status

	EINECS Number	Canada DSL	TSCA Inventory Status		
Aluminum Oxide, Non-fibrous	215-691-6	Listed	Listed		
Silicon carbide	206-991-8	Listed	Listed		
Phenol formaldehyde polymer		Listed	Listed		
Aluminum		Listed	Listed		

Aluminum Oxide, Non-fibrous :

Canada IDL: Identified under the Canadian Hazardous Products Act Ingredient Disclosure List: 0.1%.50(1298)

Aluminum :

Canada IDL: Identified under the Canadian Hazardous Products Act Ingredient Disclosure List: 0.1%.47(197)

Section 313: EPCRA - 40 CFR Part 372 - (SARA Title III) Section 313 Listed Chemical.

Aluminum Oxide, Non-fibrous :

EC Number: 215-691-6

Silicon carbide :

EC Number: 206-991-8

Aluminum :

EC Number: 231-072-3

State Right To Know

	PA	MA	NJ		
Aluminum Oxide, Non-fibrous	Listed	Listed	Listed: NJ Hazardous List; Substance Number: 2891		
Silicon carbide	Listed	Listed			
Aluminum	Listed	Listed	Listed: NJ Hazardous List; Substance Number: 0054		

SECTION 16 : ADDITIONAL INFORMATION

MSDS Creation Date:	July 27, 2011
MSDS Revision Date:	July 01, 2013

Copyright© 1996-2015 Actio Corporation. All Rights Reserved.

SAFETY DATA SHEET

1. PRODUCT AND COMPANY IDENTIFICATION

Product Name: 308L Stainless Steel Welding Wire
Product Size: All diameters

Other means of identification

SDS number: 200000003712

Recommended use and restriction on use

Recommended use: GMAW (Gas Metal Arc Welding), GTAW (Gas Tungsten Arc Welding)
Restrictions on use: Not known. Read this SDS before using this product.

Manufacturer/Importer/Supplier/Distributor Information

Manufacturer/Supplier:
The Harris Products Group
4501 Quality Place
Mason, OH 45040-1971 USA
Phone: +1 (513) 754-2000

Safety Data Sheet Questions: SDS@lincolnelectric.com

Arc Welding Safety Information: www.lincolnelectric.com/safety

24-Hour Emergency Response Telephone Numbers:

Area	Telephone
USA/Canada/Mexico	+1 (888) 609-1762
Americas/Europe	+1 (216) 383-8962
Asia Pacific	+1 (216) 383-8966
Middle East/Africa	+1 (216) 383-8969

3E Company Access Code: 333988

2. HAZARDS IDENTIFICATION

Classified according to the criteria of the Globally Harmonized System of Classification and Labeling of Chemicals (GHS), OSHA Hazard Communication Standard (29 CFR 1910.1200) and the Canadian Controlled Products Regulations.

Hazard Classification Not classified as hazardous according to applicable GHS hazard classification criteria.

Label Elements

Hazard Symbol: No symbol

Signal Word: No signal word.

Hazard Statement Not applicable

Precautionary Statement Not applicable

Other hazards which do not result in GHS classification:

Electrical Shock can kill. If welding must be performed in damp locations or with wet clothing, on metal structures or when in cramped positions such as sitting, kneeling or lying, or if there is a high risk of unavoidable or accidental contact with work piece, use the following equipment: Semiautomatic DC Welder, DC Manual (Stick) Welder, or AC Welder with Reduced Voltage Control.

Arc rays can injure eyes and burn skin. Welding arc and sparks can ignite combustibles and flammable materials. Overexposure to welding fumes and gases can be hazardous. Read and understand the manufacturer's instructions, Safety Data Sheets and the precautionary labels before using this product. Refer to Section 8.

Substance(s) formed under the conditions of use:

The welding fume produced from this welding electrode may contain the following constituent(s) and/or their complex metallic oxides as well as solid particles or other constituents from the consumables, base metal, or base metal coating not listed below:

Chemical Identity	CAS-No.
Carbon dioxide	124-38-9
Carbon monoxide	630-08-0
Nitrogen dioxide	10102-44-0
Ozone	10028-15-6
Manganese	7439-96-5
Nickel	7440-02-0
Chromium oxide	1308-38-9

3. COMPOSITION / INFORMATION ON INGREDIENTS

Reportable Hazardous Ingredients

Chemical Identity	CAS number	Content in percent (%)*
Iron	7439-89-6	60 - 100%
Chromium and chromium alloys or compounds (as Cr)	7440-47-3	15 - 40%
Nickel	7440-02-0	7 - 13%
Manganese	7439-96-5	1 - 5%
Silicon	7440-21-3	0.1 - 1%
Molybdenum	7439-98-7	0.1 - 1%
Cobalt and compounds (as Co)	7440-48-4	0.1 - 1%

* All concentrations are percent by weight unless ingredient is a gas. Gas concentrations are in percent by volume.

Composition Comments:

The term "Hazardous Ingredients" should be interpreted as a term defined in Hazard Communication standards and does not necessarily imply the existence of a welding hazard. The product may contain additional non-hazardous ingredients or may form additional compounds under the condition of use. Refer to Sections 2 and 8 for more information.

4. FIRST AID MEASURES

Ingestion: Unlikely due to form of product, except for granular materials. Avoid hand, clothing, food, and drink contact with metal fume or powder which can cause ingestion of particulate during hand to mouth activities such as drinking, eating, smoking, etc. If ingested, do not induce vomiting. Contact a poison control center. Unless the poison control center advises otherwise, wash out mouth thoroughly with water. If symptoms develop, seek medical attention at once.

Inhalation: Move to fresh air if breathing is difficult. If breathing has stopped, perform artificial respiration and obtain medical assistance at once.

Skin Contact: Remove contaminated clothing and wash the skin thoroughly with soap and water. For reddened or blistered skin, or thermal burns, obtain medical assistance at once.

Eye contact: Dust or fume from this product should be flushed from the eyes with copious amounts of clean, tepid water until transported to an emergency medical facility. Do not allow victim to rub or keep eyes tightly closed. Obtain medical assistance at once.

Arc rays can injure eyes. If exposed to arc rays, move victim to dark room, remove contact lenses as necessary for treatment, cover eyes with a padded dressing and rest. Obtain medical assistance if symptoms persist.

Most important symptoms/effects, acute and delayed

Symptoms: Short-term (acute) overexposure to welding fumes may result in discomfort such as metal fume fever, dizziness, nausea, or dryness or irritation of nose, throat, or eyes. May aggravate pre-existing respiratory problems (e.g. asthma, emphysema).

Long-term (chronic) overexposure to welding fumes can lead to siderosis (iron deposits in lung), central nervous system effects, bronchitis and other pulmonary effects. Refer to Section 11 for more information.

Hazards: Welding hazards are complex and may include physical and health hazards such as but not limited to electric shock, physical strains, radiation burns (eye flash), thermal burns due to hot metal or spatter and potential health effects of overexposure to welding fume or dust. Refer to Section 11 for more information.

Indication of immediate medical attention and special treatment needed

Treatment: Treat symptomatically.

5. FIRE-FIGHTING MEASURES

General Fire Hazards: As shipped, this product is nonflammable. However, welding arc and sparks can ignite combustibles and flammable products. Read and understand American National Standard Z49.1, "Safety In Welding, Cutting and Allied Processes" and National Fire Protection Association NFPA 51B, "Standard for Fire Prevention During Welding, Cutting and Other Hot Work" before using this product.

Suitable (and unsuitable) extinguishing media

Suitable extinguishing media:	As shipped, the product will not burn. In case of fire in the surroundings: use appropriate extinguishing agent.
Unsuitable extinguishing media:	None known.
Specific hazards arising from the chemical:	Welding arc and sparks can ignite combustibles and flammable products.

Special protective equipment and precautions for firefighters

Special fire fighting procedures:	Use standard firefighting procedures and consider the hazards of other involved materials.
Special protective equipment for fire-fighters:	Selection of respiratory protection for fire fighting: follow the general fire precautions indicated in the workplace. Self-contained breathing apparatus and full protective clothing must be worn in case of fire.

6. ACCIDENTAL RELEASE MEASURES

Personal precautions, protective equipment and emergency procedures	If airborne dust and/or fume is present, use adequate engineering controls and, if needed, personal protection to prevent overexposure. Refer to recommendations in Section 8.
Methods and material for containment and cleaning up	Clean up spills immediately, observing precautions in the personal protective equipment in Section 8. Avoid generating dust. Prevent product from entering any drains, sewers or water sources. Refer to Section 13 for proper disposal.
Environmental Precautions:	Avoid release to the environment. Prevent further leakage or spillage if safe to do so.

7. HANDLING AND STORAGE

Precautions for safe handling:	Keep formation of airborne dusts to a minimum. Provide appropriate exhaust ventilation at places where dust is formed. Read and understand the manufacturer's instruction and the precautionary label on the product. Refer to Lincoln Safety Publications at www.lincolnelectric.com/safety. See American National Standard Z49.1, "Safety In Welding, Cutting and Allied Processes" published by the American Welding Society, http://pubs.aws.org and OSHA Publication 2206 (29CFR1910), U.S. Government Printing Office, www.gpo.gov.
Conditions for safe storage, including any incompatibilities:	Store in closed original container in a dry place. Store away from incompatible materials. Store in accordance with local/regional/national regulations.

8. EXPOSURE CONTROLS / PERSONAL PROTECTION

Control Parameters

Occupational Exposure Limits: US

Chemical Identity	Type	Exposure Limit Values	Source
Chromium and chromium alloys or compounds (as Cr) - as Cr	TWA	0.5 mg/m3	US. ACGIH Threshold Limit Values (12 2010)
	PEL	1 mg/m3	US. OSHA Table Z-1 Limits for Air Contaminants (29 CFR 1910.1000) (02 2006)
	REL	0.5 mg/m3	US. NIOSH: Pocket Guide to Chemical Hazards (2005)
Nickel - Inhalable fraction.	TWA	1.5 mg/m3	US. ACGIH Threshold Limit Values (12 2010)
Nickel - as Ni	PEL	1 mg/m3	US. OSHA Table Z-1 Limits for Air Contaminants (29 CFR 1910.1000) (02 2006)
	REL	0.015 mg/m3	US. NIOSH: Pocket Guide to Chemical Hazards (2005)
Manganese - Fume. - as Mn	Ceiling	5 mg/m3	US. OSHA Table Z-1 Limits for Air Contaminants (29 CFR 1910.1000) (02 2006)
	REL	1 mg/m3	US. NIOSH: Pocket Guide to Chemical Hazards (2005)
	STEL	3 mg/m3	US. NIOSH: Pocket Guide to Chemical Hazards (2005)
Manganese - Inhalable fraction. - as Mn	TWA	0.1 mg/m3	US. ACGIH Threshold Limit Values (03 2014)
Manganese - Respirable fraction. - as Mn	TWA	0.02 mg/m3	US. ACGIH Threshold Limit Values (03 2014)
Silicon - Total dust.	PEL	15 mg/m3	US. OSHA Table Z-1 Limits for Air Contaminants (29 CFR 1910.1000) (02 2006)
Silicon - Respirable fraction.	PEL	5 mg/m3	US. OSHA Table Z-1 Limits for Air Contaminants (29 CFR 1910.1000) (02 2006)
Silicon - Respirable.	REL	5 mg/m3	US. NIOSH: Pocket Guide to Chemical Hazards (2005)
Silicon - Total	REL	10 mg/m3	US. NIOSH: Pocket Guide to Chemical Hazards (2005)
Molybdenum - Total dust. - as Mo	PEL	15 mg/m3	US. OSHA Table Z-1 Limits for Air Contaminants (29 CFR 1910.1000) (02 2006)
Molybdenum - Inhalable fraction. - as Mo	TWA	10 mg/m3	US. ACGIH Threshold Limit Values (03 2014)
Molybdenum - Respirable fraction. - as Mo	TWA	3 mg/m3	US. ACGIH Threshold Limit Values (03 2014)
Cobalt and compounds (as Co) - as Co	TWA	0.02 mg/m3	US. ACGIH Threshold Limit Values (12 2010)
Cobalt and compounds (as Co) - Dust and fume. - as Co	REL	0.05 mg/m3	US. NIOSH: Pocket Guide to Chemical Hazards (2005)
	PEL	0.1 mg/m3	US. OSHA Table Z-1 Limits for Air Contaminants (29 CFR 1910.1000) (02 2006)

Occupational Exposure Limits: CANADA

Chemical Identity	Type	Exposure Limit Values	Source
Chromium and chromium alloys or compounds (as Cr) - as Cr	TWA	0.5 mg/m3	Canada. Alberta OELs (Occupational Health & Safety Code, Schedule 1, Table 2) (07 2009)
Chromium and chromium alloys or compounds (as Cr)	TWA	0.5 mg/m3	Canada. British Columbia OELs. (Occupational Exposure Limits for Chemical Substances, Occupational Health and Safety Regulation 296/97, as amended) (07 2007)
Chromium and chromium alloys or compounds (as Cr) - as Cr	TWA	0.5 mg/m3	Canada. Manitoba OELs (Reg. 217/2006, The Workplace Safety And Health Act) (03 2011)

	TWAEV	0.5 mg/m3	Canada. Ontario OELs. (Control of Exposure to Biological or Chemical Agents) (11 2010)
	8 HR ACL	0.5 mg/m3	Canada. Saskatchewan OELs (Occupational Health and Safety Regulations, 1996, Table 21) (05 2009)
	15 MIN ACL	1.5 mg/m3	Canada. Saskatchewan OELs (Occupational Health and Safety Regulations, 1996, Table 21) (05 2009)
Chromium and chromium alloys or compounds (as Cr)	TWA	0.5 mg/m3	Canada. Quebec OELs. (Ministry of Labor - Regulation Respecting the Quality of the Work Environment) (12 2008)
Nickel	TWA	1.5 mg/m3	Canada. Alberta OELs (Occupational Health & Safety Code, Schedule 1, Table 2) (07 2009)
	TWA	0.05 mg/m3	Canada. British Columbia OELs. (Occupational Exposure Limits for Chemical Substances, Occupational Health and Safety Regulation 296/97, as amended) (05 2013)
Nickel - Inhalable fraction.	TWA	1.5 mg/m3	Canada. Manitoba OELs (Reg. 217/2006, The Workplace Safety And Health Act) (03 2011)
Nickel - Inhalable - as Ni	TWAEV	1 mg/m3	Canada. Ontario OELs. (Control of Exposure to Biological or Chemical Agents) (11 2010)
Nickel - Inhalable fraction. - as Ni	8 HR ACL	1.5 mg/m3	Canada. Saskatchewan OELs (Occupational Health and Safety Regulations, 1996, Table 21) (05 2009)
	15 MIN ACL	3 mg/m3	Canada. Saskatchewan OELs (Occupational Health and Safety Regulations, 1996, Table 21) (05 2009)
Nickel	TWA	1 mg/m3	Canada. Quebec OELs. (Ministry of Labor - Regulation Respecting the Quality of the Work Environment) (12 2008)
Manganese - as Mn	TWA	0.2 mg/m3	Canada. Alberta OELs (Occupational Health & Safety Code, Schedule 1, Table 2) (07 2009)
	TWA	0.2 mg/m3	Canada. British Columbia OELs. (Occupational Exposure Limits for Chemical Substances, Occupational Health and Safety Regulation 296/97, as amended) (07 2007)
	TWAEV	0.2 mg/m3	Canada. Ontario OELs. (Control of Exposure to Biological or Chemical Agents) (11 2010)
	8 HR ACL	0.2 mg/m3	Canada. Saskatchewan OELs (Occupational Health and Safety Regulations, 1996, Table 21) (05 2009)
	15 MIN ACL	0.6 mg/m3	Canada. Saskatchewan OELs (Occupational Health and Safety Regulations, 1996, Table 21) (05 2009)
Manganese - Fume. - as Mn	TWA	1 mg/m3	Canada. Quebec OELs. (Ministry of Labor - Regulation Respecting the Quality of the Work Environment) (12 2008)
Manganese - Dust. - as Mn	TWA	5 mg/m3	Canada. Quebec OELs. (Ministry of Labor - Regulation Respecting the Quality of the Work Environment) (12 2008)
Manganese - Fume. - as Mn	STEL	3 mg/m3	Canada. Quebec OELs. (Ministry of Labor - Regulation Respecting the Quality of the Work Environment) (12 2008)
Manganese - Respirable fraction. - as Mn	TWA	0.02 mg/m3	Canada. Manitoba OELs (Reg. 217/2006, The Workplace Safety And Health Act) (03 2014)
Manganese - Inhalable fraction. - as Mn	TWA	0.1 mg/m3	Canada. Manitoba OELs (Reg. 217/2006, The Workplace Safety And Health Act) (03 2014)
Silicon - Total dust.	TWAEV	10 mg/m3	Canada. Ontario OELs. (Control of Exposure to Biological or Chemical Agents) (07 2010)
Silicon	8 HR ACL	10 mg/m3	Canada. Saskatchewan OELs (Occupational Health and Safety Regulations, 1996, Table 21) (05 2009)

	15 MIN ACL	20 mg/m3	Canada. Saskatchewan OELs (Occupational Health and Safety Regulations, 1996, Table 21) (05 2009)
Silicon - Total dust.	TWA	10 mg/m3	Canada. Quebec OELs. (Ministry of Labor - Regulation Respecting the Quality of the Work Environment) (12 2008)
Molybdenum - Inhalable	TWA	10 mg/m3	Canada. British Columbia OELs. (Occupational Exposure Limits for Chemical Substances, Occupational Health and Safety Regulation 296/97, as amended) (07 2007)
Molybdenum - Respirable.	TWA	3 mg/m3	Canada. British Columbia OELs. (Occupational Exposure Limits for Chemical Substances, Occupational Health and Safety Regulation 296/97, as amended) (07 2007)
Molybdenum - Inhalable fraction. - as Mo	TWAEV	10 mg/m3	Canada. Ontario OELs. (Control of Exposure to Biological or Chemical Agents) (11 2010)
	8 HR ACL	10 mg/m3	Canada. Saskatchewan OELs (Occupational Health and Safety Regulations, 1996, Table 21) (05 2009)
Molybdenum - Respirable fraction. - as Mo	8 HR ACL	3 mg/m3	Canada. Saskatchewan OELs (Occupational Health and Safety Regulations, 1996, Table 21) (05 2009)
Molybdenum - Inhalable fraction. - as Mo	15 MIN ACL	20 mg/m3	Canada. Saskatchewan OELs (Occupational Health and Safety Regulations, 1996, Table 21) (05 2009)
Molybdenum - Respirable fraction. - as Mo	15 MIN ACL	6 mg/m3	Canada. Saskatchewan OELs (Occupational Health and Safety Regulations, 1996, Table 21) (05 2009)
Molybdenum - as Mo	TWA	10 mg/m3	Canada. Quebec OELs. (Ministry of Labor - Regulation Respecting the Quality of the Work Environment) (12 2008)
Molybdenum - Respirable fraction. - as Mo	TWA	3 mg/m3	Canada. Manitoba OELs (Reg. 217/2006, The Workplace Safety And Health Act) (03 2014)
Molybdenum - Inhalable fraction. - as Mo	TWA	10 mg/m3	Canada. Manitoba OELs (Reg. 217/2006, The Workplace Safety And Health Act) (03 2014)
Cobalt and compounds (as Co) - as Co	TWA	0.02 mg/m3	Canada. Alberta OELs (Occupational Health & Safety Code, Schedule 1, Table 2) (07 2009)
	TWA	0.02 mg/m3	Canada. British Columbia OELs. (Occupational Exposure Limits for Chemical Substances, Occupational Health and Safety Regulation 296/97, as amended) (07 2007)
	TWA	0.02 mg/m3	Canada. Manitoba OELs (Reg. 217/2006, The Workplace Safety And Health Act) (03 2011)
	TWAEV	0.02 mg/m3	Canada. Ontario OELs. (Control of Exposure to Biological or Chemical Agents) (11 2010)
	8 HR ACL	0.02 mg/m3	Canada. Saskatchewan OELs (Occupational Health and Safety Regulations, 1996, Table 21) (05 2009)
	15 MIN ACL	0.06 mg/m3	Canada. Saskatchewan OELs (Occupational Health and Safety Regulations, 1996, Table 21) (05 2009)
	TWA	0.02 mg/m3	Canada. Quebec OELs. (Ministry of Labor - Regulation Respecting the Quality of the Work Environment) (12 2008)

Occupational Exposure Limits: MEXICO

Chemical Identity	Type	Exposure Limit Values	Source
Chromium and chromium alloys or compounds (as Cr)	CPT	0.5 mg/m3	Mexico. Occupational Exposure Limit Values (03 2000)
Nickel	CPT	1 mg/m3	Mexico. Occupational Exposure Limit Values (03 2000)
Manganese - as Mn	CPT	0.2 mg/m3	Mexico. Occupational Exposure Limit

			Values (03 2000)
Manganese - Fume. - as Mn	CPT	1 mg/m3	Mexico. Occupational Exposure Limit Values (03 2000)
	CTT	3 mg/m3	Mexico. Occupational Exposure Limit Values (03 2000)
Silicon	CPT	10 mg/m3	Mexico. Occupational Exposure Limit Values (03 2000)
	CTT	20 mg/m3	Mexico. Occupational Exposure Limit Values (03 2000)
Molybdenum - as Mo	CPT	10 mg/m3	Mexico. Occupational Exposure Limit Values (03 2000)
	CTT	20 mg/m3	Mexico. Occupational Exposure Limit Values (03 2000)
Cobalt and compounds (as Co) - Dust and fume. - as Co	CPT	0.1 mg/m3	Mexico. Occupational Exposure Limit Values (03 2000)

Biological Limit Values: US

Chemical Identity	Exposure Limit Values	Source
Cobalt and compounds (as Co) (Cobalt: Sampling time: End of shift at end of work week.)	15 µg/l (Urine)	ACGIH BEL (03 2013)
	1 µg/l (Blood)	ACGIH BEL (03 2013)

Biological Limit Values: MEXICO

Chemical Identity	Exposure Limit Values	Source
Cobalt and compounds (as Co) (Cobalt: Sampling time: End of shift at end of work week.)	15 µg/l (Urine)	MX IBE (06 2012)
	1 µg/l (Blood)	MX IBE (06 2012)

Additional exposure limits under the conditions of use: US

Chemical Identity	Type	Exposure Limit Values		Source
Carbon dioxide	TWA	5,000 ppm		US. ACGIH Threshold Limit Values (12 2010)
	STEL	30,000 ppm		US. ACGIH Threshold Limit Values (12 2010)
	PEL	5,000 ppm	9,000 mg/m3	US. OSHA Table Z-1 Limits for Air Contaminants (29 CFR 1910.1000) (02 2006)
	STEL	30,000 ppm	54,000 mg/m3	US. NIOSH: Pocket Guide to Chemical Hazards (2005)
	REL	5,000 ppm	9,000 mg/m3	US. NIOSH: Pocket Guide to Chemical Hazards (2005)
Carbon monoxide	TWA	25 ppm		US. ACGIH Threshold Limit Values (12 2010)
	PEL	50 ppm	55 mg/m3	US. OSHA Table Z-1 Limits for Air Contaminants (29 CFR 1910.1000) (02 2006)
	REL	35 ppm	40 mg/m3	US. NIOSH: Pocket Guide to Chemical Hazards (2005)
	Ceil_Time	200 ppm	229 mg/m3	US. NIOSH: Pocket Guide to Chemical Hazards (2005)
Nitrogen dioxide	TWA	0.2 ppm		US. ACGIH Threshold Limit Values (02 2012)
	Ceiling	5 ppm	9 mg/m3	US. OSHA Table Z-1 Limits for Air Contaminants (29 CFR 1910.1000) (02 2006)
	STEL	1 ppm	1.8 mg/m3	US. NIOSH: Pocket Guide to Chemical Hazards (2005)
Ozone	PEL	0.1 ppm	0.2 mg/m3	US. OSHA Table Z-1 Limits for Air Contaminants (29 CFR 1910.1000) (02 2006)

	Ceil_Time	0.1 ppm	0.2 mg/m3	US. NIOSH: Pocket Guide to Chemical Hazards (2005)
	TWA	0.05 ppm		US. ACGIH Threshold Limit Values (03 2014)
	TWA	0.20 ppm		US. ACGIH Threshold Limit Values (03 2014)
	TWA	0.10 ppm		US. ACGIH Threshold Limit Values (03 2014)
	TWA	0.08 ppm		US. ACGIH Threshold Limit Values (03 2014)
Manganese - Fume. - as Mn	Ceiling		5 mg/m3	US. OSHA Table Z-1 Limits for Air Contaminants (29 CFR 1910.1000) (02 2006)
	REL		1 mg/m3	US. NIOSH: Pocket Guide to Chemical Hazards (2005)
	STEL		3 mg/m3	US. NIOSH: Pocket Guide to Chemical Hazards (2005)
Manganese - Inhalable fraction. - as Mn	TWA		0.1 mg/m3	US. ACGIH Threshold Limit Values (03 2014)
Manganese - Respirable fraction. - as Mn	TWA		0.02 mg/m3	US. ACGIH Threshold Limit Values (03 2014)
Nickel - Inhalable fraction.	TWA		1.5 mg/m3	US. ACGIH Threshold Limit Values (12 2010)
Nickel - as Ni	PEL		1 mg/m3	US. OSHA Table Z-1 Limits for Air Contaminants (29 CFR 1910.1000) (02 2006)
	REL		0.015 mg/m3	US. NIOSH: Pocket Guide to Chemical Hazards (2005)
Chromium oxide - as Cr	TWA		0.5 mg/m3	US. ACGIH Threshold Limit Values (03 2012)
	PEL		0.5 mg/m3	US. OSHA Table Z-1 Limits for Air Contaminants (29 CFR 1910.1000) (02 2006)
	REL		0.5 mg/m3	US. NIOSH: Pocket Guide to Chemical Hazards (2005)

Additional exposure limits under the conditions of use: CANADA

Chemical Identity	Type	Exposure Limit Values		Source
Carbon dioxide	STEL	30,000 ppm	54,000 mg/m3	Canada. Alberta OELs (Occupational Health & Safety Code, Schedule 1, Table 2) (07 2009)
	TWA	5,000 ppm	9,000 mg/m3	Canada. Alberta OELs (Occupational Health & Safety Code, Schedule 1, Table 2) (07 2009)
	TWA	5,000 ppm		Canada. British Columbia OELs. (Occupational Exposure Limits for Chemical Substances, Occupational Health and Safety Regulation 296/97, as amended) (07 2007)
	STEL	15,000 ppm		Canada. British Columbia OELs. (Occupational Exposure Limits for Chemical Substances, Occupational Health and Safety Regulation 296/97, as amended) (07 2007)
	TWA	5,000 ppm		Canada. Manitoba OELs (Reg. 217/2006, The Workplace Safety And Health Act) (03 2011)
	STEL	30,000 ppm		Canada. Manitoba OELs (Reg. 217/2006, The Workplace Safety And Health Act) (03 2011)
	STEV	30,000 ppm		Canada. Ontario OELs. (Control of Exposure to Biological or Chemical Agents) (11 2010)
	TWAEV	5,000 ppm		Canada. Ontario OELs. (Control of Exposure to Biological or Chemical Agents) (11 2010)
	8 HR ACL	5,000 ppm		Canada. Saskatchewan OELs (Occupational Health and Safety Regulations, 1996, Table 21) (05 2009)

	15 MIN ACL	30,000 ppm		Canada. Saskatchewan OELs (Occupational Health and Safety Regulations, 1996, Table 21) (05 2009)
	TWA	5,000 ppm	9,000 mg/m3	Canada. Quebec OELs. (Ministry of Labor - Regulation Respecting the Quality of the Work Environment) (12 2008)
	STEL	30,000 ppm	54,000 mg/m3	Canada. Quebec OELs. (Ministry of Labor - Regulation Respecting the Quality of the Work Environment) (12 2008)
Carbon monoxide	TWA	25 ppm	29 mg/m3	Canada. Alberta OELs (Occupational Health & Safety Code, Schedule 1, Table 2) (07 2009)
	TWA	25 ppm		Canada. British Columbia OELs. (Occupational Exposure Limits for Chemical Substances, Occupational Health and Safety Regulation 296/97, as amended) (07 2007)
	STEL	100 ppm		Canada. British Columbia OELs. (Occupational Exposure Limits for Chemical Substances, Occupational Health and Safety Regulation 296/97, as amended) (07 2007)
	TWA	25 ppm		Canada. Manitoba OELs (Reg. 217/2006, The Workplace Safety And Health Act) (03 2011)
	STEV	100 ppm		Canada. Ontario OELs. (Control of Exposure to Biological or Chemical Agents) (07 2010)
	TWAEV	25 ppm		Canada. Ontario OELs. (Control of Exposure to Biological or Chemical Agents) (07 2010)
	8 HR ACL	25 ppm		Canada. Saskatchewan OELs (Occupational Health and Safety Regulations, 1996, Table 21) (05 2009)
	15 MIN ACL	190 ppm		Canada. Saskatchewan OELs (Occupational Health and Safety Regulations, 1996, Table 21) (05 2009)
	TWA	35 ppm	40 mg/m3	Canada. Quebec OELs. (Ministry of Labor - Regulation Respecting the Quality of the Work Environment) (12 2008)
	STEL	200 ppm	230 mg/m3	Canada. Quebec OELs. (Ministry of Labor - Regulation Respecting the Quality of the Work Environment) (12 2008)
Nitrogen dioxide	STEL	5 ppm	9.4 mg/m3	Canada. Alberta OELs (Occupational Health & Safety Code, Schedule 1, Table 2) (07 2009)
	TWA	3 ppm	5.6 mg/m3	Canada. Alberta OELs (Occupational Health & Safety Code, Schedule 1, Table 2) (07 2009)
	CEILING	1 ppm		Canada. British Columbia OELs. (Occupational Exposure Limits for Chemical Substances, Occupational Health and Safety Regulation 296/97, as amended) (07 2007)
	TWA	0.2 ppm		Canada. Manitoba OELs (Reg. 217/2006, The Workplace Safety And Health Act) (03 2012)
	STEV	5 ppm		Canada. Ontario OELs. (Control of Exposure to Biological or Chemical Agents) (11 2010)
	TWAEV	3 ppm		Canada. Ontario OELs. (Control of Exposure to Biological or Chemical Agents) (11 2010)
	8 HR ACL	3 ppm		Canada. Saskatchewan OELs (Occupational Health and Safety Regulations, 1996, Table 21) (05 2009)
	15 MIN ACL	5 ppm		Canada. Saskatchewan OELs (Occupational Health and Safety Regulations, 1996, Table 21) (05 2009)
	TWA	3 ppm	5.6 mg/m3	Canada. Quebec OELs. (Ministry of Labor - Regulation Respecting the Quality of the Work Environment) (12 2008)

Ozone	STEL	0.3 ppm	0.6 mg/m3	Canada. Alberta OELs (Occupational Health & Safety Code, Schedule 1, Table 2) (07 2009)
	TWA	0.1 ppm	0.2 mg/m3	Canada. Alberta OELs (Occupational Health & Safety Code, Schedule 1, Table 2) (07 2009)
	TWA	0.05 ppm		Canada. British Columbia OELs. (Occupational Exposure Limits for Chemical Substances, Occupational Health and Safety Regulation 296/97, as amended) (07 2007)
	TWA	0.1 ppm		Canada. British Columbia OELs. (Occupational Exposure Limits for Chemical Substances, Occupational Health and Safety Regulation 296/97, as amended) (07 2007)
	TWA	0.08 ppm		Canada. British Columbia OELs. (Occupational Exposure Limits for Chemical Substances, Occupational Health and Safety Regulation 296/97, as amended) (07 2007)
	TWA	0.2 ppm		Canada. British Columbia OELs. (Occupational Exposure Limits for Chemical Substances, Occupational Health and Safety Regulation 296/97, as amended) (07 2007)
	TWAEV	0.1 ppm	0.2 mg/m3	Canada. Ontario OELs. (Control of Exposure to Biological or Chemical Agents) (07 2010)
	STEV	0.3 ppm	0.6 mg/m3	Canada. Ontario OELs. (Control of Exposure to Biological or Chemical Agents) (07 2010)
	15 MIN ACL	0.15 ppm		Canada. Saskatchewan OELs (Occupational Health and Safety Regulations, 1996, Table 21) (05 2009)
	8 HR ACL	0.05 ppm		Canada. Saskatchewan OELs (Occupational Health and Safety Regulations, 1996, Table 21) (05 2009)
	CEILING	0.1 ppm	0.2 mg/m3	Canada. Quebec OELs. (Ministry of Labor - Regulation Respecting the Quality of the Work Environment) (12 2008)
	TWA	0.20 ppm		Canada. Manitoba OELs (Reg. 217/2006, The Workplace Safety And Health Act) (03 2014)
	TWA	0.05 ppm		Canada. Manitoba OELs (Reg. 217/2006, The Workplace Safety And Health Act) (03 2014)
	TWA	0.08 ppm		Canada. Manitoba OELs (Reg. 217/2006, The Workplace Safety And Health Act) (03 2014)
	TWA	0.10 ppm		Canada. Manitoba OELs (Reg. 217/2006, The Workplace Safety And Health Act) (03 2014)
Manganese - as Mn	TWA		0.2 mg/m3	Canada. Alberta OELs (Occupational Health & Safety Code, Schedule 1, Table 2) (07 2009)
	TWA		0.2 mg/m3	Canada. British Columbia OELs. (Occupational Exposure Limits for Chemical Substances, Occupational Health and Safety Regulation 296/97, as amended) (07 2007)
	TWAEV		0.2 mg/m3	Canada. Ontario OELs. (Control of Exposure to Biological or Chemical Agents) (11 2010)
	8 HR ACL		0.2 mg/m3	Canada. Saskatchewan OELs (Occupational Health and Safety Regulations, 1996, Table 21) (05 2009)
	15 MIN ACL		0.6 mg/m3	Canada. Saskatchewan OELs (Occupational Health and Safety Regulations, 1996, Table 21) (05 2009)
Manganese - Fume. - as Mn	TWA		1 mg/m3	Canada. Quebec OELs. (Ministry of Labor - Regulation Respecting the Quality of the Work Environment) (12 2008)

Manganese - Dust. - as Mn	TWA	5 mg/m3	Canada. Quebec OELs. (Ministry of Labor - Regulation Respecting the Quality of the Work Environment) (12 2008)
Manganese - Fume. - as Mn	STEL	3 mg/m3	Canada. Quebec OELs. (Ministry of Labor - Regulation Respecting the Quality of the Work Environment) (12 2008)
Manganese - Respirable fraction. - as Mn	TWA	0.02 mg/m3	Canada. Manitoba OELs (Reg. 217/2006, The Workplace Safety And Health Act) (03 2014)
Manganese - Inhalable fraction. - as Mn	TWA	0.1 mg/m3	Canada. Manitoba OELs (Reg. 217/2006, The Workplace Safety And Health Act) (03 2014)
Nickel	TWA	1.5 mg/m3	Canada. Alberta OELs (Occupational Health & Safety Code, Schedule 1, Table 2) (07 2009)
	TWA	0.05 mg/m3	Canada. British Columbia OELs. (Occupational Exposure Limits for Chemical Substances, Occupational Health and Safety Regulation 296/97, as amended) (05 2013)
Nickel - Inhalable fraction.	TWA	1.5 mg/m3	Canada. Manitoba OELs (Reg. 217/2006, The Workplace Safety And Health Act) (03 2011)
Nickel - Inhalable - as Ni	TWAEV	1 mg/m3	Canada. Ontario OELs. (Control of Exposure to Biological or Chemical Agents) (11 2010)
Nickel - Inhalable fraction. - as Ni	8 HR ACL	1.5 mg/m3	Canada. Saskatchewan OELs (Occupational Health and Safety Regulations, 1996, Table 21) (05 2009)
	15 MIN ACL	3 mg/m3	Canada. Saskatchewan OELs (Occupational Health and Safety Regulations, 1996, Table 21) (05 2009)
Nickel	TWA	1 mg/m3	Canada. Quebec OELs. (Ministry of Labor - Regulation Respecting the Quality of the Work Environment) (12 2008)
Chromium oxide - as Cr	TWA	0.5 mg/m3	Canada. Alberta OELs (Occupational Health & Safety Code, Schedule 1, Table 2) (07 2009)
	TWA	0.5 mg/m3	Canada. British Columbia OELs. (Occupational Exposure Limits for Chemical Substances, Occupational Health and Safety Regulation 296/97, as amended) (09 2011)
	TWA	0.5 mg/m3	Canada. Manitoba OELs (Reg. 217/2006, The Workplace Safety And Health Act) (03 2012)
	TWAEV	0.5 mg/m3	Canada. Ontario OELs. (Control of Exposure to Biological or Chemical Agents) (11 2010)
	8 HR ACL	0.5 mg/m3	Canada. Saskatchewan OELs (Occupational Health and Safety Regulations, 1996, Table 21) (05 2009)
	15 MIN ACL	1.5 mg/m3	Canada. Saskatchewan OELs (Occupational Health and Safety Regulations, 1996, Table 21) (05 2009)

Additional exposure limits under the conditions of use: MEXICO

Chemical Identity	Type	Exposure Limit Values		Source
Carbon dioxide	CPT	5,000 ppm	9,000 mg/m3	Mexico. Occupational Exposure Limit Values (03 2000)
	CTT	15,000 ppm	27,000 mg/m3	Mexico. Occupational Exposure Limit Values (03 2000)
Carbon monoxide	CTT	400 ppm	400 mg/m3	Mexico. Occupational Exposure Limit Values (03 2000)
	CPT	50 ppm	55 mg/m3	Mexico. Occupational Exposure Limit Values (03 2000)
Nitrogen dioxide	CTT	5 ppm	10 mg/m3	Mexico. Occupational Exposure Limit Values (03 2000)
	CPT	3 ppm	6 mg/m3	Mexico. Occupational Exposure Limit Values (03 2000)

Ozone	P	0.1 ppm	0.2 mg/m3	Mexico. Occupational Exposure Limit Values (03 2000)
Manganese - as Mn	CPT		0.2 mg/m3	Mexico. Occupational Exposure Limit Values (03 2000)
Manganese - Fume. - as Mn	CPT		1 mg/m3	Mexico. Occupational Exposure Limit Values (03 2000)
	CTT		3 mg/m3	Mexico. Occupational Exposure Limit Values (03 2000)
Nickel	CPT		1 mg/m3	Mexico. Occupational Exposure Limit Values (03 2000)
Chromium oxide	CPT		0.5 mg/m3	Mexico. Occupational Exposure Limit Values (03 2000)

Appropriate Engineering Controls

Ventilation: Use enough ventilation, local exhaust at the arc, or both to keep the fumes and gases from the worker's breathing zone and the general area. Train the welder to keep his head out of the fumes. **Keep exposure as low as possible.**

Individual protection measures, such as personal protective equipment

General information:

Exposure Guidelines: Threshold Limit Values (TLVs) and Biological Exposure Indices (BEIs) are values published by the American Conference of Government Industrial Hygienists (ACGIH). ACGIH Statement of Positions Regarding the TLVs® and BEIs® states that the TLV-TWA should be used as a guide in the control of health hazards and should not be used to indicate a fine line between safe and dangerous exposures. See Section 10 for information on potential fume constituents of health interest. Threshold Limit Values are figures published by the American Conference of Government Industrial Hygienists.

Maximum Fume Exposure Guideline™ (MFEG)™ for this product (based on content of Manganese) is 0.3 mg/m3. This exposure guideline is calculated using the most conservative value of the ACGIH TLV or OSHA PEL for the stated substance.

Eye/face protection:

Wear helmet or use face shield with filter lens shade number 12 or darker for open arc processes. No specific lens shade recommendation for submerged arc processes. Shield others by providing screens and flash goggles.

Skin Protection

Hand Protection:

Wear protective gloves. Suitable gloves can be recommended by the glove supplier.

Other:

Protective Clothing: Wear hand, head, and body protection which help to prevent injury from radiation, sparks and electrical shock. See Z49.1. At a minimum this includes welder's gloves and a protective face shield, and may include arm protectors, aprons, hats, shoulder protection, as well as dark substantial clothing. Wear dry gloves free of holes or split seams. Train the welder not to permit electrically live parts or electrodes to contact skin . . . or clothing or gloves if they are wet. Insulate yourself from the work piece and ground using dry plywood, rubber mats or other dry insulation.

Respiratory Protection:

Keep your head out of fumes. Use enough ventilation and local exhaust to keep fumes and gases from your breathing zone and the general area. An approved respirator should be used unless exposure assessments are below applicable exposure limits.

Hygiene measures: Do not eat, drink or smoke when using the product. Always observe good personal hygiene measures, such as washing after handling the material and before eating, drinking, and/or smoking. Routinely wash work clothing and protective equipment to remove contaminants.

Determine the composition and quantity of fumes and gases to which workers are exposed by taking an air sample from inside the welder's helmet if worn or in the worker's breathing zone. Improve ventilation if exposures are not below limits. See ANSI/AWS F1.1, F1.2, F1.3 and F1.5, available from the American Welding Society, www.aws.org.

9. PHYSICAL AND CHEMICAL PROPERTIES

Appearance:	Solid welding wire or rod
Physical state:	Solid
Form:	Solid
Color:	No data available.
Odor:	No data available.
Odor threshold:	No data available.
pH:	Not applicable
Melting point/freezing point:	No data available.
Initial boiling point and boiling range:	No data available.
Flash Point:	Not applicable
Evaporation rate:	Not applicable
Flammability (solid, gas):	No data available.
Upper/lower limit on flammability or explosive limits	
Flammability limit - upper (%):	No data available.
Flammability limit - lower (%):	No data available.
Explosive limit - upper (%):	No data available.
Explosive limit - lower (%):	No data available.
Vapor pressure:	Not applicable
Vapor density:	Not applicable
Relative density:	No data available.
Solubility(ies)	
Solubility in water:	No data available.
Solubility (other):	No data available.
Partition coefficient (n-octanol/water):	No data available.
Auto-ignition temperature:	No data available.
Decomposition temperature:	No data available.
Viscosity:	Not applicable

10. STABILITY AND REACTIVITY

Reactivity: The product is non-reactive under normal conditions of use, storage and transport.

Chemical Stability: Material is stable under normal conditions.

Possibility of Hazardous Reactions: No data available.

Conditions to Avoid: Avoid heat or contamination.

Incompatible Materials: Strong oxidizing substances. Strong acids. Strong bases.

Hazardous Decomposition Products: Welding fumes and gases cannot be classified simply. The composition and quantity of both are dependent upon the metal being welded, the process, procedure and electrodes used. Other conditions which also influence the composition and quantity of the fumes and gases to which workers may be exposed include: coatings on the metal being welded (such as paint, plating, or galvanizing), the number of welders and the volume of the worker area, the quality and amount of ventilation, the position of the welder's head with respect to the fume plume, as well as the presence of contaminants in the atmosphere (such as chlorinated hydrocarbon vapors from cleaning and degreasing activities.)

When the electrode is consumed, the fume and gas decomposition products generated are different in percent and form from the ingredients listed in Section 3. Decomposition products of normal operation include those originating from the volatilization, reaction, or oxidation of the materials shown in Section 3, plus those from the base metal and coating, etc., as noted above. Reasonably expected fume constituents produced during arc welding include the oxides of iron, manganese and other metals present in the welding consumable or base metal. Hexavalent chromium compounds may be in the welding fume of consumables or base metals which contain chromium. Gaseous and particulate fluoride may be in the welding fume of consumables which contain fluoride. Gaseous reaction products may include carbon monoxide and carbon dioxide. Ozone and nitrogen oxides may be formed by the radiation from the arc.

11. TOXICOLOGICAL INFORMATION

Information on likely routes of exposure

Ingestion: Health injuries from ingestion are not known or expected under normal use.

Inhalation: Potential chronic health hazards related to the use of welding consumables are most applicable to the inhalation route of exposure. Refer to Inhalation statements in Section 11.

Skin Contact: Arc rays can burn skin. Skin cancer has been reported.

Eye contact: Arc rays can injure eyes.

Symptoms related to the physical, chemical and toxicological characteristics

Inhalation: Short-term (acute) overexposure to welding fumes may result in discomfort such as metal fume fever, dizziness, nausea, or dryness or irritation of nose, throat, or eyes. May aggravate pre-existing respiratory problems (e.g. asthma, emphysema). Long-term (chronic) overexposure to welding fumes can lead to siderosis (iron deposits in lung), central nervous system effects, bronchitis and other pulmonary effects.

Information on toxicological effects

Acute toxicity (list all possible routes of exposure)

Oral

Product: Not classified

Specified substance(s):

Iron LD 50 (Rat): 98.6 g/kg

Dermal

Product: Not classified

Specified substance(s):

Cobalt and compounds (as Co)	LD 50LD 50 (Rat): > 2,000 mg/kg

Inhalation

Product: Not classified

Specified substance(s):

Cobalt and compounds (as Co)	LC 50 (Rat, 4 h): 165 mg/m3

Repeated Dose Toxicity

Product: Not classified

Skin Corrosion/Irritation

Product: Not classified

Serious Eye Damage/Eye Irritation

Product: Not classified

Respiratory or Skin Sensitization

Product: Not classified

Carcinogenicity

Product: Arc rays: Skin cancer has been reported.

IARC Monographs on the Evaluation of Carcinogenic Risks to Humans:

Nickel	Overall evaluation: 2B. Possibly carcinogenic to humans.
Cobalt and compounds (as Co)	Overall evaluation: 2B. Possibly carcinogenic to humans.

US. National Toxicology Program (NTP) Report on Carcinogens:

Nickel	Reasonably Anticipated to be a Human Carcinogen.

US. OSHA Specifically Regulated Substances (29 CFR 1910.1001-1050):

No carcinogenic components identified

Germ Cell Mutagenicity

In vitro

Product: Not classified

In vivo

Product: Not classified

Reproductive Toxicity

Product: Not classified

Specific Target Organ Toxicity - Single Exposure

Product: Not classified

Specific Target Organ Toxicity - Repeated Exposure

Product: Not classified

Aspiration Hazard

Product: Not classified

Other Effects: Organic polymers may be used in the manufacture of various welding consumables. Overexposure to their decomposition byproducts may result in a condition known as polymer fume fever. Polymer fume fever usually occurs within 4 to 8 hours of exposure with the presentation of flu like symptoms, including mild pulmonary irritation with or without an increase in body temperature. Signs of exposure can include an increase in white blood cell count. Resolution of symptoms typically occurs quickly, usually not lasting longer than 48 hours.

Symptoms related to the physical, chemical and toxicological characteristics under the condition of use

Inhalation:
Specified substance(s):

Manganese	Overexposure to manganese fumes may affect the brain and central nervous system, resulting in poor coordination, difficulty speaking, and arm or leg tremor. This condition can be irreversible.
Nickel	Nickel and its compounds are on the IARC and NTP lists as posing respiratory cancer risk, and are skin sensitizers with symptoms ranging from slight itch to severe dermatitis.

Additional toxicological Information under the conditions of use:

Acute toxicity
Inhalation
Specified substance(s):

Carbon dioxide	LC Lo (Human, 5 min): 90000 ppm
Carbon monoxide	LC 50 (Rat, 4 h): 1,300 mg/l
Nitrogen dioxide	LC 50 (Rat, 4 h): 88 ppm
Ozone	LC Lo (Human, 30 min): 50 ppm

Carcinogenicity
IARC Monographs on the Evaluation of Carcinogenic Risks to Humans:
Specified substance(s):

Nickel	Overall evaluation: 2B. Possibly carcinogenic to humans.
Chromium oxide	Overall evaluation: 3. Not classifiable as to carcinogenicity to humans.

US. National Toxicology Program (NTP) Report on Carcinogens:
Specified substance(s):

Nickel	Reasonably Anticipated to be a Human Carcinogen.

12. ECOLOGICAL INFORMATION

Ecotoxicity
Acute hazards to the aquatic environment:

Fish
Product: Not classified.
Specified substance(s):

Nickel	LC 50 (Fathead minnow (Pimephales promelas), 96 h): 2.916 mg/l
Molybdenum	LC 50 (Rainbow trout,donaldson trout (Oncorhynchus mykiss), 96 h): 800 mg/l
Cobalt and compounds (as Co)	LC 50 (Rainbow trout,donaldson trout (Oncorhynchus mykiss), 28 d): > 0.17 - < 15.61 mg/l

Aquatic Invertebrates
Product: Not classified.
Specified substance(s):

Nickel	EC50 (Water flea (Daphnia magna), 48 h): 1 mg/l
Manganese	EC50 (Water flea (Daphnia magna), 48 h): 40 mg/l

Chronic hazards to the aquatic environment:

Fish
Product: Not classified.

Aquatic Invertebrates
Product: Not classified.

Toxicity to Aquatic Plants
Product: Not classified.

Persistence and Degradability

Biodegradation

Product: No data available.

Bioaccumulative Potential

Bioconcentration Factor (BCF)

Product: No data available.

Specified substance(s):

Nickel	Zebra mussel (Dreissena polymorpha), Bioconcentration Factor (BCF): 5,000 - 10,000 (Lotic) Bioconcentration factor calculated using dry weight tissue conc
Cobalt and compounds (as Co)	Brown shrimp (Penaeus aztecus), Bioconcentration Factor (BCF): > 2,250 - < 2,500 (Static)

Mobility in Soil: No data available.

13. DISPOSAL CONSIDERATIONS

General information: The generation of waste should be avoided or minimized whenever possible. When practical, recycle in an environmentally acceptable, regulatory compliant manner. Dispose of non-recyclable products in accordance with all applicable Federal, State, Provincial, and Local requirements.

Disposal Instructions: Disposal of this product may be regulated as a Hazardous Waste. The welding consumable and/or by-product from the welding process (including, but not limited to slag, dust, etc.) may contain levels of leachable heavy metals such as Barium or Chromium. Prior to disposal, a representative sample must be analyzed in accordance with US EPA's Toxicity Characteristic Leaching Procedure (TCLP) to determine if any constituents exist above regulated threshold levels. Discard any product, residue, disposable container, or liner in an environmentally acceptable manner according to Federal, State and Local Regulations. Wash before disposal. Dispose to controlled facilities.

14. TRANSPORT INFORMATION

DOT

UN Number:	
UN Proper Shipping Name:	NOT DG REGULATED
Transport Hazard Class(es)	
Class:	NR
Label(s):	–
Packing Group:	–
Marine Pollutant:	Not regulated.
Special precautions for user:	–

IMDG

UN Number:	
UN Proper Shipping Name:	NOT DG REGULATED
Transport Hazard Class(es)	
Class:	NR
Label(s):	–
EmS No.:	
Packing Group:	–
Marine Pollutant:	Not regulated.
Special precautions for user:	–

IATA

UN Number:	
Proper Shipping Name:	NOT DG REGULATED
Transport Hazard Class(es):	
Class:	NR
Label(s):	–
Packing Group:	–
Environmental Hazards	Not regulated.
Special precautions for user:	–
Other information	
Passenger and cargo aircraft:	Allowed.
Cargo aircraft only:	Allowed.

TDG

UN Number:	
UN Proper Shipping Name:	NOT DG REGULATED
Transport Hazard Class(es)	
Class:	NR
Label(s):	–
Packing Group:	–
Marine Pollutant:	Not regulated.
Special precautions for user:	–

15. REGULATORY INFORMATION

Canadian Controlled Products Regulations: This product has been classified according to the hazard criteria of the Canadian Controlled Products Regulations, Section 33, and the MSDS contains all required information.

US Federal Regulations

TSCA Section 12(b) Export Notification (40 CFR 707, Subpt. D)
None present or none present in regulated quantities.

US. OSHA Specifically Regulated Substances (29 CFR 1910.1001-1050)
None present or none present in regulated quantities.

CERCLA Hazardous Substance List (40 CFR 302.4):

Chemical Identity	Reportable quantity
Chromium and chromium alloys or compounds (as Cr)	5000lbs.
Nickel	100lbs.
Manganese	Included in the regulation but with no data values. See regulation for further details.
Cobalt and compounds (as Co)	Included in the regulation but with no data values. See regulation for further details.

Superfund Amendments and Reauthorization Act of 1986 (SARA)

Hazard categories
Acute (Immediate)
Chronic (Delayed)

SARA 302 Extremely Hazardous Substance
None present or none present in regulated quantities.

SARA 304 Emergency Release Notification

Chemical Identity	Reportable quantity
Chromium and chromium alloys or compounds (as Cr)	5000 lbs.
Nickel	100 lbs.
Manganese	Included in the regulation but with no data values. See regulation for further details.
Cobalt and compounds (as Co)	Included in the regulation but with no data values. See regulation for further details.

SARA 311/312 Hazardous Chemical

Chemical Identity	Threshold Planning Quantity
Iron	10000 lbs
Chromium and chromium alloys or compounds (as Cr)	10000 lbs
Nickel	10000 lbs
Manganese	10000 lbs
Silicon	10000 lbs
Molybdenum	10000 lbs
Cobalt and compounds (as Co)	10000 lbs

SARA 313 (TRI Reporting)

Chemical Identity	Reporting threshold for other users	Reporting threshold for manufacturing and processing
Chromium and chromium alloys or compounds (as Cr)	10000 lbs	25000 lbs.
Nickel	10000 lbs	25000 lbs.
Manganese	10000 lbs	25000 lbs.
Cobalt and compounds (as Co)	10000 lbs	25000 lbs.

Clean Water Act Section 311 Hazardous Substances (40 CFR 117.3)

None present or none present in regulated quantities.

Clean Air Act (CAA) Section 112(r) Accidental Release Prevention (40 CFR 68.130):

None present or none present in regulated quantities.

US State Regulations

US. California Proposition 65

This product contains chemical(s) known to the State of California to cause cancer and/or to cause birth defects or other reproductive harm.

Nickel	Carcinogenic.
Cobalt and compounds (as Co)	Carcinogenic.

WARNING: This product contains or produces a chemical known to the State of California to cause cancer and birth defects (or other reproductive harm). (California Health & Safety Code Section 25249.5 et seq.)

US. New Jersey Worker and Community Right-to-Know Act

Chemical Identity
Chromium and chromium alloys or compounds (as Cr)
Nickel
Manganese

US. Massachusetts RTK - Substance List

Chemical Identity
Chromium and chromium alloys or compounds (as Cr)
Nickel

US. Pennsylvania RTK - Hazardous Substances

Chemical Identity

Chromium and chromium alloys or compounds (as Cr)
Nickel
Manganese

US. Rhode Island RTK

No ingredient regulated by RI Right-to-Know Law present.

Inventory Status:

Australia AICS:	On or in compliance with the inventory
Canada DSL Inventory List:	On or in compliance with the inventory
EINECS, ELINCS or NLP:	On or in compliance with the inventory
Japan (ENCS) List:	One or more components are not listed or are exempt from listing.
China Inv. Existing Chemical Substances:	On or in compliance with the inventory
Korea Existing Chemicals Inv. (KECI):	On or in compliance with the inventory
Canada NDSL Inventory:	One or more components are not listed or are exempt from listing.
Philippines PICCS:	On or in compliance with the inventory
US TSCA Inventory:	On or in compliance with the inventory
New Zealand Inventory of Chemicals:	On or in compliance with the inventory
Japan ISHL Listing:	One or more components are not listed or are exempt from listing.
Japan Pharmacopoeia Listing:	One or more components are not listed or are exempt from listing.

16. OTHER INFORMATION

Definitions:

The Maximum Fume Exposure Guideline™ (MFEG)™ is a guideline limit for total welding fume exposure for a specific consumable product which may be used by employers to manage worker exposure to welding fume where that product is used. The MFEG™ is an estimate of the level of total welding fume exposure for a given product above which the exposure limit for one of the fume constituents may be exceeded. The exposure limits referenced are the American Conference of Governmental Industrial Hygienists (ACGIH) Threshold Limit Value (TLV®) and the U.S. OSHA Permissible Exposure Limit (PEL) whichever limit is lower. The MFEG™ never exceeds 5 mg/m³ which is the maximum recommended exposure limit for total welding fume. **The MFEG™ is intended to serve as a general guideline to assist in the management of workplace exposure to welding fume and does not replace the regular measurement and analysis of worker exposure to individual welding fume constituents.**

The Maximum Dust Exposure Guideline™ (MDEG)™ is provided to assist with the management of workplace exposures where granular solid welding products or other materials are being utilized. It is derived from relevant compositional data and estimates the lowest level of total airborne dust exposure, for a given product, at which some specific constituent might potentially exceed its individual exposure limit. The specific exposure limits referenced are the American Conference of Governmental Industrial Hygienists (ACGIH) Threshold Limit Value (TLV®) and the U. S. OSHA Permissible Exposure Limit (PEL), which ever value is the lowest. The MDEG™ is never greater than 10 mg/m³ as this is the airborne exposure guideline for total particulate (total dust). **The MDEG™ is intended to serve as a general guideline to assist in the management of workplace exposure and does not replace the regular measurement and analysis of worker exposure to individual airborne dust constituents.**

Revision Date:	05/20/2015
	Most recent revision(s) are noted by the bold, double bars in the left-hand margin throughout this document.
Further Information:	Additional information is available by request.

Disclaimer:

The Lincoln Electric Company urges each end user and recipient of this SDS to study it carefully. See also www.lincolnelectric.com/safety. If necessary, consult an industrial hygienist or other expert to understand this information and safeguard the environment and protect workers from potential hazards associated with the handling or use of this product. This information is believed to be accurate as of the revision date shown above. However, no warranty, expressed or implied, is given. Because the conditions or methods of use are beyond Lincoln Electric's control, we assume no liability resulting from the use of this product. Regulatory requirements are subject to change and may differ between various locations. Compliance with all applicable Federal, State, Provincial, and local laws and regulations remain the responsibility of the user.

© 2015 Lincoln Global, Inc. All Rights Reserved.

THE HARRIS PRODUCTS GROUP
A LINCOLN ELECTRIC COMPANY
4501 Quality Place • Mason, OH 45040 U.S.A Tel: 513-754-2000 Fax: 513-754-6015

TECHNICAL SPECIFICATION SHEET

308LSi STAINLESS STEEL WELDING WIRE

STATEMENT OF LIABILITY- DISCLAIMER

Any suggestion of product applications or results is given without representation or warranty, either expressed or implied. Without exception or limitation, there are no warranties of merchantability or of fitness for particular purpose or application. The user must fully evaluate every process and application in all aspects, including suitability, compliance with applicable law and non-infringement of the rights of others. The Harris Products Group and its affiliates shall have no liability in respect thereof.

NOMINAL COMPOSITION:

Carbon	.03% max.	Chromium	19.5-22.0%
Nickel	9.0-11.0%	Manganese	1.0-2.5%
Copper	.75% max.	Silicon	.65-1%
Phosphorus	.03% max.	Sulfur	.03% max.
Molybdenum	.75% max.	Iron	Balance
Normal Ferrite Range	5-12		

TYPICAL MECHANICAL PROPERTIES AS WELDED:

Yield Strength (psi)	57,000	Elongation	42%
Tensile Strength (psi)	87,000	Reduction of Area	60%
Charpy V	90 ft./lb. room temp.	Brinell Hardness	160 HB
Rockwell B Hardness	85 HRB		

APPLICATION:

Used to weld base metals of similar composition such as 201, 202, 301, 302, 304, 305 and 308 (also the L series). The additional silicon content increases wetting action and yields a smooth bead.

RECOMMENDED WELDING PARAMETERS:

*GMAW (MIG) Parameters (DC Reverse Polarity) Electrode Positive Short-Circuiting transfer

Wire Diameter	Amps	Volts	90% Helium + 7.5% Argon + 2.5% CO_2 (cfh)	Wire Feed (ipm)
.030	60-125	17-22	20-25	150-430
.035	75-160	17-22	20-25	120-400
.045	100-200	17-22	20-25	100-240

*GMAW (MIG) Parameters (DC Reverse Polarity) Electrode Positive Spray transfer

Wire Diameter	Amps	Volts	Argon / 1-2% O_2	Wire Feed (ipm)
.030	160-225	24-28	25	440-650
.035	180-300	24-29	30	430-500
.045	200-450	24-30	30-35	220-400
1/16	225-500	24-32	40	110-210
3/32	250-600	24-32	50	50-80

All statements, information and data given are believed to be accurate and reliable but are presented without guarantee, warranty or responsibility of any kind, expressed or implied.

Additional information available at our web site: www.harrisproductsgroup.com

9/99 DC

*GTAW (Tig) Parameters (DCSP) Electrode negative

Material	2% Thoriated	Filler Wire Size	Amps	Gas Cup	Argon(cfh)
1/16”	1/16”	1/16”	80-120	3/8	20
3/32”	1/16”	1/16”	100-130	3/8	20
1/8”	3/32”	1/16”	120-150	7/16	20
3/16”	3/32”	3/32”	150-250	7/16	25
1/4”	1/8”	1/8”	200-350	1/2	25
1/2"	1/8”	1/8”	235-375	1/2	25

* All parameters are suggested as basic guidelines and will vary depending on joint design, number of passes and other factors.

SPECIFICATION COMPLIANCE: ANSI/AWS A5.9 &ASME SFA 5.9 ER 308LSi

WARNING: PROTECT yourself and others. Read and understand this information.
FUMES AND GASES can be hazardous to your health.
ARC RAYS can injure eyes and burn skin.
ELECTRIC SHOCK can KILL.

- Before use, read and understand the manufacturer’s instructions, Material Safety Data Sheets (MSDSs), and your employer's safety practices.
- Keep your head out of fumes.
- Use enough ventilation, exhaust at the arc, or both, to keep fumes and gases from your breathing zone and the general area.
- Wear correct eye, ear, and body protection.
- Do not touch live electrical parts.
- See American National Standard Z49.1, *Safety in Welding, Cutting, and Allied Processes,* published by the American Welding Society, 550 N.W. LeJeune Road, Miami, Florida 33126; OSHA Safety and Health Standards, available from the U.S. Government Office, Washington, DC 20402

All statements, information and data given are believed to be accurate and reliable but are presented without guarantee, warranty or responsibility of any kind, expressed or implied.
Additional information available at our web site: www.harrisproductsgroup.com
9/99 DC

SAFETY DATA SHEET

1. PRODUCT AND COMPANY IDENTIFICATION

Product Name: 308LSi Stainless Steel Welding Wire

Other means of identification

SDS number: 200000003716

Recommended use and restriction on use

Restrictions on use: Not known. Read this SDS before using this product.

Manufacturer/Importer/Supplier/Distributor Information

Manufacturer/Supplier:
The Harris Products Group
4501 Quality Place
Mason, OH 45040-1971 USA
Phone: +1 (513) 754-2000

Safety Data Sheet Questions: SDS@lincolnelectric.com

Arc Welding Safety Information: www.lincolnelectric.com/safety

24-Hour Emergency Response Telephone Numbers:

Area	Telephone
USA/Canada/Mexico	+1 (888) 609-1762
Americas/Europe	+1 (216) 383-8962
Asia Pacific	+1 (216) 383-8966
Middle East/Africa	+1 (216) 383-8969

3E Company Access Code: 333988

2. HAZARDS IDENTIFICATION

Classified according to the criteria of the Globally Harmonized System of Classification and Labeling of Chemicals (GHS), OSHA Hazard Communication Standard (29 CFR 1910.1200) and the Canadian Controlled Products Regulations.

Hazard Classification Not classified as hazardous according to applicable GHS hazard classification criteria.

Label Elements

Hazard Symbol: No symbol

Signal Word: No signal word.

Hazard Statement Not applicable

Precautionary Statement Not applicable

Other hazards which do not result in GHS classification:

Electrical Shock can kill. If welding must be performed in damp locations or with wet clothing, on metal structures or when in cramped positions such as sitting, kneeling or lying, or if there is a high risk of unavoidable or accidental contact with work piece, use the following equipment: Semiautomatic DC Welder, DC Manual (Stick) Welder, or AC Welder with Reduced Voltage Control.

Arc rays can injure eyes and burn skin. Welding arc and sparks can ignite combustibles and flammable materials. Overexposure to welding fumes and gases can be hazardous. Read and understand the manufacturer's instructions, Safety Data Sheets and the precautionary labels before using this product. Refer to Section 8.

Substance(s) formed under the conditions of use:

The welding fume produced from this welding electrode may contain the following constituent(s) and/or their complex metallic oxides as well as solid particles or other constituents from the consumables, base metal, or base metal coating not listed below:

Chemical Identity	CAS-No.
Carbon dioxide	124-38-9
Carbon monoxide	630-08-0
Nitrogen dioxide	10102-44-0
Ozone	10028-15-6
Manganese	7439-96-5
Chromium (VI)	18540-29-9
Nickel	7440-02-0
Chromium oxide	1308-38-9

3. COMPOSITION / INFORMATION ON INGREDIENTS

Reportable Hazardous Ingredients

Chemical Identity	CAS number	Content in percent (%)*
Iron	7439-89-6	60 - 100%
Chromium and chromium alloys or compounds (as Cr)	7440-47-3	15 - 40%
Nickel	7440-02-0	10 - 30%
Manganese	7439-96-5	1 - 5%
Silicon	7440-21-3	0.5 - 1.5%
Molybdenum	7439-98-7	0.1 - 1%
Copper and/or copper alloys and compounds (as Cu)	7440-50-8	0.1 - 1%
Cobalt and compounds (as Co)	7440-48-4	0.1 - 1%

* All concentrations are percent by weight unless ingredient is a gas. Gas concentrations are in percent by volume.

Composition Comments:

The term "Hazardous Ingredients" should be interpreted as a term defined in Hazard Communication standards and does not necessarily imply the existence of a welding hazard. The product may contain additional non-hazardous ingredients or may form additional compounds under the condition of use. Refer to Sections 2 and 8 for more information.

4. FIRST AID MEASURES

Ingestion: Unlikely due to form of product, except for granular materials. Avoid hand, clothing, food, and drink contact with metal fume or powder which can cause ingestion of particulate during hand to mouth activities such as drinking, eating, smoking, etc. If ingested, do not induce vomiting. Contact a poison control center. Unless the poison control center advises otherwise, wash out mouth thoroughly with water. If symptoms develop, seek medical attention at once.

Inhalation: Move to fresh air if breathing is difficult. If breathing has stopped, perform artificial respiration and obtain medical assistance at once.

Skin Contact: Remove contaminated clothing and wash the skin thoroughly with soap and water. For reddened or blistered skin, or thermal burns, obtain medical assistance at once.

Eye contact: Dust or fume from this product should be flushed from the eyes with copious amounts of clean, tepid water until transported to an emergency medical facility. Do not allow victim to rub or keep eyes tightly closed. Obtain medical assistance at once.

Arc rays can injure eyes. If exposed to arc rays, move victim to dark room, remove contact lenses as necessary for treatment, cover eyes with a padded dressing and rest. Obtain medical assistance if symptoms persist.

Most important symptoms/effects, acute and delayed

Symptoms: Short-term (acute) overexposure to welding fumes may result in discomfort such as metal fume fever, dizziness, nausea, or dryness or irritation of nose, throat, or eyes. May aggravate pre-existing respiratory problems (e.g. asthma, emphysema).

Long-term (chronic) overexposure to welding fumes can lead to siderosis (iron deposits in lung), central nervous system effects, bronchitis and other pulmonary effects. Refer to Section 11 for more information.

Hazards: Welding hazards are complex and may include physical and health hazards such as but not limited to electric shock, physical strains, radiation burns (eye flash), thermal burns due to hot metal or spatter and potential health effects of overexposure to welding fume or dust. Refer to Section 11 for more information.

Indication of immediate medical attention and special treatment needed

Treatment: Treat symptomatically.

5. FIRE-FIGHTING MEASURES

General Fire Hazards: As shipped, this product is nonflammable. However, welding arc and sparks can ignite combustibles and flammable products. Read and understand American National Standard Z49.1, "Safety In Welding, Cutting and Allied Processes" and National Fire Protection Association NFPA 51B, "Standard for Fire Prevention During Welding, Cutting and Other Hot Work" before using this product.

Suitable (and unsuitable) extinguishing media

Suitable extinguishing media:	As shipped, the product will not burn. In case of fire in the surroundings: use appropriate extinguishing agent.
Unsuitable extinguishing media:	None known.
Specific hazards arising from the chemical:	Welding arc and sparks can ignite combustibles and flammable products.

Special protective equipment and precautions for firefighters

Special fire fighting procedures:	Use standard firefighting procedures and consider the hazards of other involved materials.
Special protective equipment for fire-fighters:	Selection of respiratory protection for fire fighting: follow the general fire precautions indicated in the workplace. Self-contained breathing apparatus and full protective clothing must be worn in case of fire.

6. ACCIDENTAL RELEASE MEASURES

Personal precautions, protective equipment and emergency procedures	If airborne dust and/or fume is present, use adequate engineering controls and, if needed, personal protection to prevent overexposure. Refer to recommendations in Section 8.
Methods and material for containment and cleaning up	Clean up spills immediately, observing precautions in the personal protective equipment in Section 8. Avoid generating dust. Prevent product from entering any drains, sewers or water sources. Refer to Section 13 for proper disposal.
Environmental Precautions:	Avoid release to the environment. Prevent further leakage or spillage if safe to do so.

7. HANDLING AND STORAGE

Precautions for safe handling:	Keep formation of airborne dusts to a minimum. Provide appropriate exhaust ventilation at places where dust is formed. Read and understand the manufacturer's instruction and the precautionary label on the product. Refer to Lincoln Safety Publications at www.lincolnelectric.com/safety. See American National Standard Z49.1, "Safety In Welding, Cutting and Allied Processes" published by the American Welding Society, http://pubs.aws.org and OSHA Publication 2206 (29CFR1910), U.S. Government Printing Office, www.gpo.gov.
Conditions for safe storage, including any incompatibilities:	Store in closed original container in a dry place. Store away from incompatible materials. Store in accordance with local/regional/national regulations.

8. EXPOSURE CONTROLS / PERSONAL PROTECTION

Control Parameters

Occupational Exposure Limits: US

Chemical Identity	Type	Exposure Limit Values	Source
Chromium and chromium alloys or compounds (as Cr) - as Cr	TWA	0.5 mg/m3	US. ACGIH Threshold Limit Values (12 2010)
	PEL	1 mg/m3	US. OSHA Table Z-1 Limits for Air Contaminants (29 CFR 1910.1000) (02 2006)
	REL	0.5 mg/m3	US. NIOSH: Pocket Guide to Chemical Hazards (2005)
Nickel - Inhalable fraction.	TWA	1.5 mg/m3	US. ACGIH Threshold Limit Values (12 2010)
Nickel - as Ni	PEL	1 mg/m3	US. OSHA Table Z-1 Limits for Air Contaminants (29 CFR 1910.1000) (02 2006)
	REL	0.015 mg/m3	US. NIOSH: Pocket Guide to Chemical Hazards (2005)
Manganese - Fume. - as Mn	Ceiling	5 mg/m3	US. OSHA Table Z-1 Limits for Air Contaminants (29 CFR 1910.1000) (02 2006)
	REL	1 mg/m3	US. NIOSH: Pocket Guide to Chemical Hazards (2005)
	STEL	3 mg/m3	US. NIOSH: Pocket Guide to Chemical Hazards (2005)
Manganese - Inhalable fraction. - as Mn	TWA	0.1 mg/m3	US. ACGIH Threshold Limit Values (03 2014)
Manganese - Respirable fraction. - as Mn	TWA	0.02 mg/m3	US. ACGIH Threshold Limit Values (03 2014)
Silicon - Total dust.	PEL	15 mg/m3	US. OSHA Table Z-1 Limits for Air Contaminants (29 CFR 1910.1000) (02 2006)
Silicon - Respirable fraction.	PEL	5 mg/m3	US. OSHA Table Z-1 Limits for Air Contaminants (29 CFR 1910.1000) (02 2006)
Silicon - Respirable.	REL	5 mg/m3	US. NIOSH: Pocket Guide to Chemical Hazards (2005)
Silicon - Total	REL	10 mg/m3	US. NIOSH: Pocket Guide to Chemical Hazards (2005)
Molybdenum - Total dust. - as Mo	PEL	15 mg/m3	US. OSHA Table Z-1 Limits for Air Contaminants (29 CFR 1910.1000) (02 2006)
Molybdenum - Inhalable fraction. - as Mo	TWA	10 mg/m3	US. ACGIH Threshold Limit Values (03 2014)
Molybdenum - Respirable fraction. - as Mo	TWA	3 mg/m3	US. ACGIH Threshold Limit Values (03 2014)
Copper and/or copper alloys and compounds (as Cu) - Fume. - as Cu	PEL	0.1 mg/m3	US. OSHA Table Z-1 Limits for Air Contaminants (29 CFR 1910.1000) (02 2006)
Copper and/or copper alloys and compounds (as Cu) - Dust and mist. - as Cu	PEL	1 mg/m3	US. OSHA Table Z-1 Limits for Air Contaminants (29 CFR 1910.1000) (02 2006)
	REL	1 mg/m3	US. NIOSH: Pocket Guide to Chemical Hazards (2005)
	TWA	1 mg/m3	US. ACGIH Threshold Limit Values (03 2014)
Copper and/or copper alloys and compounds (as Cu) - Fume. - as Cu	TWA	0.2 mg/m3	US. ACGIH Threshold Limit Values (03 2014)
Cobalt and compounds (as Co) - as Co	TWA	0.02 mg/m3	US. ACGIH Threshold Limit Values (12 2010)
Cobalt and compounds (as Co) - Dust and fume. - as Co	REL	0.05 mg/m3	US. NIOSH: Pocket Guide to Chemical Hazards (2005)
	PEL	0.1 mg/m3	US. OSHA Table Z-1 Limits for Air Contaminants (29 CFR 1910.1000) (02 2006)

Occupational Exposure Limits: CANADA

Chemical Identity	Type	Exposure Limit Values	Source
Chromium and chromium alloys or compounds (as Cr) - as Cr	TWA	0.5 mg/m3	Canada. Alberta OELs (Occupational Health & Safety Code, Schedule 1, Table 2) (07 2009)
Chromium and chromium alloys or compounds (as Cr)	TWA	0.5 mg/m3	Canada. British Columbia OELs. (Occupational Exposure Limits for Chemical Substances, Occupational Health and Safety Regulation 296/97, as amended) (07 2007)
Chromium and chromium alloys or compounds (as Cr) - as Cr	TWA	0.5 mg/m3	Canada. Manitoba OELs (Reg. 217/2006, The Workplace Safety And Health Act) (03 2011)
	TWAEV	0.5 mg/m3	Canada. Ontario OELs. (Control of Exposure to Biological or Chemical Agents) (11 2010)
	8 HR ACL	0.5 mg/m3	Canada. Saskatchewan OELs (Occupational Health and Safety Regulations, 1996, Table 21) (05 2009)
	15 MIN ACL	1.5 mg/m3	Canada. Saskatchewan OELs (Occupational Health and Safety Regulations, 1996, Table 21) (05 2009)
Chromium and chromium alloys or compounds (as Cr)	TWA	0.5 mg/m3	Canada. Quebec OELs. (Ministry of Labor - Regulation Respecting the Quality of the Work Environment) (12 2008)
Nickel	TWA	1.5 mg/m3	Canada. Alberta OELs (Occupational Health & Safety Code, Schedule 1, Table 2) (07 2009)
	TWA	0.05 mg/m3	Canada. British Columbia OELs. (Occupational Exposure Limits for Chemical Substances, Occupational Health and Safety Regulation 296/97, as amended) (05 2013)
Nickel - Inhalable fraction.	TWA	1.5 mg/m3	Canada. Manitoba OELs (Reg. 217/2006, The Workplace Safety And Health Act) (03 2011)
Nickel - Inhalable - as Ni	TWAEV	1 mg/m3	Canada. Ontario OELs. (Control of Exposure to Biological or Chemical Agents) (11 2010)
Nickel - Inhalable fraction. - as Ni	8 HR ACL	1.5 mg/m3	Canada. Saskatchewan OELs (Occupational Health and Safety Regulations, 1996, Table 21) (05 2009)
	15 MIN ACL	3 mg/m3	Canada. Saskatchewan OELs (Occupational Health and Safety Regulations, 1996, Table 21) (05 2009)
Nickel	TWA	1 mg/m3	Canada. Quebec OELs. (Ministry of Labor - Regulation Respecting the Quality of the Work Environment) (12 2008)
Manganese - as Mn	TWA	0.2 mg/m3	Canada. Alberta OELs (Occupational Health & Safety Code, Schedule 1, Table 2) (07 2009)
	TWA	0.2 mg/m3	Canada. British Columbia OELs. (Occupational Exposure Limits for Chemical Substances, Occupational Health and Safety Regulation 296/97, as amended) (07 2007)
	TWAEV	0.2 mg/m3	Canada. Ontario OELs. (Control of Exposure to Biological or Chemical Agents) (11 2010)
	8 HR ACL	0.2 mg/m3	Canada. Saskatchewan OELs (Occupational Health and Safety Regulations, 1996, Table 21) (05 2009)
	15 MIN ACL	0.6 mg/m3	Canada. Saskatchewan OELs (Occupational Health and Safety Regulations, 1996, Table 21) (05 2009)
Manganese - Fume. - as Mn	TWA	1 mg/m3	Canada. Quebec OELs. (Ministry of Labor - Regulation Respecting the Quality of the Work Environment) (12 2008)
Manganese - Dust. - as Mn	TWA	5 mg/m3	Canada. Quebec OELs. (Ministry of Labor - Regulation Respecting the Quality of the Work Environment) (12 2008)
Manganese - Fume. - as Mn	STEL	3 mg/m3	Canada. Quebec OELs. (Ministry of Labor

			- Regulation Respecting the Quality of the Work Environment) (12 2008)
Manganese - Respirable fraction. - as Mn	TWA	0.02 mg/m3	Canada. Manitoba OELs (Reg. 217/2006, The Workplace Safety And Health Act) (03 2014)
Manganese - Inhalable fraction. - as Mn	TWA	0.1 mg/m3	Canada. Manitoba OELs (Reg. 217/2006, The Workplace Safety And Health Act) (03 2014)
Silicon - Total dust.	TWAEV	10 mg/m3	Canada. Ontario OELs. (Control of Exposure to Biological or Chemical Agents) (07 2010)
Silicon	8 HR ACL	10 mg/m3	Canada. Saskatchewan OELs (Occupational Health and Safety Regulations, 1996, Table 21) (05 2009)
	15 MIN ACL	20 mg/m3	Canada. Saskatchewan OELs (Occupational Health and Safety Regulations, 1996, Table 21) (05 2009)
Silicon - Total dust.	TWA	10 mg/m3	Canada. Quebec OELs. (Ministry of Labor - Regulation Respecting the Quality of the Work Environment) (12 2008)
Molybdenum - Inhalable	TWA	10 mg/m3	Canada. British Columbia OELs. (Occupational Exposure Limits for Chemical Substances, Occupational Health and Safety Regulation 296/97, as amended) (07 2007)
Molybdenum - Respirable.	TWA	3 mg/m3	Canada. British Columbia OELs. (Occupational Exposure Limits for Chemical Substances, Occupational Health and Safety Regulation 296/97, as amended) (07 2007)
Molybdenum - Inhalable fraction. - as Mo	TWAEV	10 mg/m3	Canada. Ontario OELs. (Control of Exposure to Biological or Chemical Agents) (11 2010)
	8 HR ACL	10 mg/m3	Canada. Saskatchewan OELs (Occupational Health and Safety Regulations, 1996, Table 21) (05 2009)
Molybdenum - Respirable fraction. - as Mo	8 HR ACL	3 mg/m3	Canada. Saskatchewan OELs (Occupational Health and Safety Regulations, 1996, Table 21) (05 2009)
Molybdenum - Inhalable fraction. - as Mo	15 MIN ACL	20 mg/m3	Canada. Saskatchewan OELs (Occupational Health and Safety Regulations, 1996, Table 21) (05 2009)
Molybdenum - Respirable fraction. - as Mo	15 MIN ACL	6 mg/m3	Canada. Saskatchewan OELs (Occupational Health and Safety Regulations, 1996, Table 21) (05 2009)
Molybdenum - as Mo	TWA	10 mg/m3	Canada. Quebec OELs. (Ministry of Labor - Regulation Respecting the Quality of the Work Environment) (12 2008)
Molybdenum - Respirable fraction. - as Mo	TWA	3 mg/m3	Canada. Manitoba OELs (Reg. 217/2006, The Workplace Safety And Health Act) (03 2014)
Molybdenum - Inhalable fraction. - as Mo	TWA	10 mg/m3	Canada. Manitoba OELs (Reg. 217/2006, The Workplace Safety And Health Act) (03 2014)
Copper and/or copper alloys and compounds (as Cu) - Fume.	TWA	0.2 mg/m3	Canada. Alberta OELs (Occupational Health & Safety Code, Schedule 1, Table 2) (07 2009)
Copper and/or copper alloys and compounds (as Cu) - Dust and mist. - as Cu	TWA	1 mg/m3	Canada. Alberta OELs (Occupational Health & Safety Code, Schedule 1, Table 2) (07 2009)
Copper and/or copper alloys and compounds (as Cu) - Fume. - as Cu	TWA	0.2 mg/m3	Canada. British Columbia OELs. (Occupational Exposure Limits for Chemical Substances, Occupational Health and Safety Regulation 296/97, as amended) (07 2007)
Copper and/or copper alloys and compounds (as Cu) - Dust and mist. - as Cu	TWA	1 mg/m3	Canada. British Columbia OELs. (Occupational Exposure Limits for Chemical Substances, Occupational Health and Safety Regulation 296/97, as amended) (07 2007)
Copper and/or copper alloys and compounds (as Cu) - Fume.	TWAEV	0.2 mg/m3	Canada. Ontario OELs. (Control of Exposure to Biological or Chemical Agents) (11 2010)
Copper and/or copper alloys	8 HR ACL	1 mg/m3	Canada. Saskatchewan OELs

and compounds (as Cu) - Dust and mist. - as Cu			(Occupational Health and Safety Regulations, 1996, Table 21) (05 2009)
Copper and/or copper alloys and compounds (as Cu) - Fume. - as Cu	15 MIN ACL	0.6 mg/m3	Canada. Saskatchewan OELs (Occupational Health and Safety Regulations, 1996, Table 21) (05 2009)
Copper and/or copper alloys and compounds (as Cu) - Dust and mist. - as Cu	15 MIN ACL	3 mg/m3	Canada. Saskatchewan OELs (Occupational Health and Safety Regulations, 1996, Table 21) (05 2009)
Copper and/or copper alloys and compounds (as Cu) - Fume. - as Cu	8 HR ACL	0.2 mg/m3	Canada. Saskatchewan OELs (Occupational Health and Safety Regulations, 1996, Table 21) (05 2009)
	TWA	0.2 mg/m3	Canada. Quebec OELs. (Ministry of Labor - Regulation Respecting the Quality of the Work Environment) (12 2008)
Copper and/or copper alloys and compounds (as Cu) - Dust and mist. - as Cu	TWA	1 mg/m3	Canada. Quebec OELs. (Ministry of Labor - Regulation Respecting the Quality of the Work Environment) (12 2008)
	TWA	1 mg/m3	Canada. Manitoba OELs (Reg. 217/2006, The Workplace Safety And Health Act) (03 2014)
Copper and/or copper alloys and compounds (as Cu) - Fume. - as Cu	TWA	0.2 mg/m3	Canada. Manitoba OELs (Reg. 217/2006, The Workplace Safety And Health Act) (03 2014)
Cobalt and compounds (as Co) - as Co	TWA	0.02 mg/m3	Canada. Alberta OELs (Occupational Health & Safety Code, Schedule 1, Table 2) (07 2009)
	TWA	0.02 mg/m3	Canada. British Columbia OELs. (Occupational Exposure Limits for Chemical Substances, Occupational Health and Safety Regulation 296/97, as amended) (07 2007)
	TWA	0.02 mg/m3	Canada. Manitoba OELs (Reg. 217/2006, The Workplace Safety And Health Act) (03 2011)
	TWAEV	0.02 mg/m3	Canada. Ontario OELs. (Control of Exposure to Biological or Chemical Agents) (11 2010)
	8 HR ACL	0.02 mg/m3	Canada. Saskatchewan OELs (Occupational Health and Safety Regulations, 1996, Table 21) (05 2009)
	15 MIN ACL	0.06 mg/m3	Canada. Saskatchewan OELs (Occupational Health and Safety Regulations, 1996, Table 21) (05 2009)
	TWA	0.02 mg/m3	Canada. Quebec OELs. (Ministry of Labor - Regulation Respecting the Quality of the Work Environment) (12 2008)

Occupational Exposure Limits: MEXICO

Chemical Identity	Type	Exposure Limit Values	Source
Chromium and chromium alloys or compounds (as Cr)	CPT	0.5 mg/m3	Mexico. Occupational Exposure Limit Values (03 2000)
Nickel	CPT	1 mg/m3	Mexico. Occupational Exposure Limit Values (03 2000)
Manganese - as Mn	CPT	0.2 mg/m3	Mexico. Occupational Exposure Limit Values (03 2000)
Manganese - Fume. - as Mn	CPT	1 mg/m3	Mexico. Occupational Exposure Limit Values (03 2000)
	CTT	3 mg/m3	Mexico. Occupational Exposure Limit Values (03 2000)
Silicon	CPT	10 mg/m3	Mexico. Occupational Exposure Limit Values (03 2000)
	CTT	20 mg/m3	Mexico. Occupational Exposure Limit Values (03 2000)
Molybdenum - as Mo	CPT	10 mg/m3	Mexico. Occupational Exposure Limit Values (03 2000)
	CTT	20 mg/m3	Mexico. Occupational Exposure Limit Values (03 2000)
Copper and/or copper alloys and compounds (as Cu) - Dust and mist. - as Cu	CTT	2 mg/m3	Mexico. Occupational Exposure Limit Values (03 2000)
Copper and/or copper alloys	CTT	2 mg/m3	Mexico. Occupational Exposure Limit

and compounds (as Cu) - Fume. - as Cu			Values (03 2000)
	CPT	0.2 mg/m3	Mexico. Occupational Exposure Limit Values (03 2000)
Copper and/or copper alloys and compounds (as Cu) - Dust and mist. - as Cu	CPT	1 mg/m3	Mexico. Occupational Exposure Limit Values (03 2000)
Cobalt and compounds (as Co) - Dust and fume. - as Co	CPT	0.1 mg/m3	Mexico. Occupational Exposure Limit Values (03 2000)

Biological Limit Values: US

Chemical Identity	Exposure Limit Values	Source
Cobalt and compounds (as Co) (Cobalt: Sampling time: End of shift at end of work week.)	15 µg/l (Urine)	ACGIH BEL (03 2013)
	1 µg/l (Blood)	ACGIH BEL (03 2013)

Biological Limit Values: MEXICO

Chemical Identity	Exposure Limit Values	Source
Cobalt and compounds (as Co) (Cobalt: Sampling time: End of shift at end of work week.)	15 µg/l (Urine)	MX IBE (06 2012)
	1 µg/l (Blood)	MX IBE (06 2012)

Additional exposure limits under the conditions of use: US

Chemical Identity	Type	Exposure Limit Values		Source
Carbon dioxide	TWA	5,000 ppm		US. ACGIH Threshold Limit Values (12 2010)
	STEL	30,000 ppm		US. ACGIH Threshold Limit Values (12 2010)
	PEL	5,000 ppm	9,000 mg/m3	US. OSHA Table Z-1 Limits for Air Contaminants (29 CFR 1910.1000) (02 2006)
	STEL	30,000 ppm	54,000 mg/m3	US. NIOSH: Pocket Guide to Chemical Hazards (2005)
	REL	5,000 ppm	9,000 mg/m3	US. NIOSH: Pocket Guide to Chemical Hazards (2005)
Carbon monoxide	TWA	25 ppm		US. ACGIH Threshold Limit Values (12 2010)
	PEL	50 ppm	55 mg/m3	US. OSHA Table Z-1 Limits for Air Contaminants (29 CFR 1910.1000) (02 2006)
	REL	35 ppm	40 mg/m3	US. NIOSH: Pocket Guide to Chemical Hazards (2005)
	Ceil_Time	200 ppm	229 mg/m3	US. NIOSH: Pocket Guide to Chemical Hazards (2005)
Nitrogen dioxide	TWA	0.2 ppm		US. ACGIH Threshold Limit Values (02 2012)
	Ceiling	5 ppm	9 mg/m3	US. OSHA Table Z-1 Limits for Air Contaminants (29 CFR 1910.1000) (02 2006)
	STEL	1 ppm	1.8 mg/m3	US. NIOSH: Pocket Guide to Chemical Hazards (2005)
Ozone	PEL	0.1 ppm	0.2 mg/m3	US. OSHA Table Z-1 Limits for Air Contaminants (29 CFR 1910.1000) (02 2006)
	Ceil_Time	0.1 ppm	0.2 mg/m3	US. NIOSH: Pocket Guide to Chemical Hazards (2005)
	TWA	0.05 ppm		US. ACGIH Threshold Limit Values (03 2014)
	TWA	0.20 ppm		US. ACGIH Threshold Limit Values (03 2014)
	TWA	0.10 ppm		US. ACGIH Threshold Limit Values (03 2014)

	TWA	0.08 ppm	US. ACGIH Threshold Limit Values (03 2014)
Manganese - Fume. - as Mn	Ceiling	5 mg/m3	US. OSHA Table Z-1 Limits for Air Contaminants (29 CFR 1910.1000) (02 2006)
	REL	1 mg/m3	US. NIOSH: Pocket Guide to Chemical Hazards (2005)
	STEL	3 mg/m3	US. NIOSH: Pocket Guide to Chemical Hazards (2005)
Manganese - Inhalable fraction. - as Mn	TWA	0.1 mg/m3	US. ACGIH Threshold Limit Values (03 2014)
Manganese - Respirable fraction. - as Mn	TWA	0.02 mg/m3	US. ACGIH Threshold Limit Values (03 2014)
Chromium (VI) - as Cr	TWA	0.05 mg/m3	US. ACGIH Threshold Limit Values (12 2010)
Chromium (VI)	TWA	0.005 mg/m3	US. OSHA Specifically Regulated Substances (29 CFR 1910.1001-1050) (02 2006)
	OSHA_ACT	0.0025 mg/m3	US. OSHA Specifically Regulated Substances (29 CFR 1910.1001-1050) (02 2006)
Chromium (VI) - as Cr	REL	0.5 mg/m3	US. NIOSH: Pocket Guide to Chemical Hazards (2010)
Nickel - Inhalable fraction.	TWA	1.5 mg/m3	US. ACGIH Threshold Limit Values (12 2010)
Nickel - as Ni	PEL	1 mg/m3	US. OSHA Table Z-1 Limits for Air Contaminants (29 CFR 1910.1000) (02 2006)
	REL	0.015 mg/m3	US. NIOSH: Pocket Guide to Chemical Hazards (2005)
Chromium oxide - as Cr	TWA	0.5 mg/m3	US. ACGIH Threshold Limit Values (03 2012)
	PEL	0.5 mg/m3	US. OSHA Table Z-1 Limits for Air Contaminants (29 CFR 1910.1000) (02 2006)
	REL	0.5 mg/m3	US. NIOSH: Pocket Guide to Chemical Hazards (2005)

Additional exposure limits under the conditions of use: CANADA

Chemical Identity	Type	Exposure Limit Values		Source
Carbon dioxide	STEL	30,000 ppm	54,000 mg/m3	Canada. Alberta OELs (Occupational Health & Safety Code, Schedule 1, Table 2) (07 2009)
	TWA	5,000 ppm	9,000 mg/m3	Canada. Alberta OELs (Occupational Health & Safety Code, Schedule 1, Table 2) (07 2009)
	TWA	5,000 ppm		Canada. British Columbia OELs. (Occupational Exposure Limits for Chemical Substances, Occupational Health and Safety Regulation 296/97, as amended) (07 2007)
	STEL	15,000 ppm		Canada. British Columbia OELs. (Occupational Exposure Limits for Chemical Substances, Occupational Health and Safety Regulation 296/97, as amended) (07 2007)
	TWA	5,000 ppm		Canada. Manitoba OELs (Reg. 217/2006, The Workplace Safety And Health Act) (03 2011)
	STEL	30,000 ppm		Canada. Manitoba OELs (Reg. 217/2006, The Workplace Safety And Health Act) (03 2011)
	STEV	30,000 ppm		Canada. Ontario OELs. (Control of Exposure to Biological or Chemical Agents) (11 2010)
	TWAEV	5,000 ppm		Canada. Ontario OELs. (Control of Exposure to Biological or Chemical Agents) (11 2010)
	8 HR ACL	5,000 ppm		Canada. Saskatchewan OELs (Occupational Health and Safety Regulations, 1996, Table 21) (05 2009)

	15 MIN ACL	30,000 ppm		Canada. Saskatchewan OELs (Occupational Health and Safety Regulations, 1996, Table 21) (05 2009)
	TWA	5,000 ppm	9,000 mg/m3	Canada. Quebec OELs. (Ministry of Labor - Regulation Respecting the Quality of the Work Environment) (12 2008)
	STEL	30,000 ppm	54,000 mg/m3	Canada. Quebec OELs. (Ministry of Labor - Regulation Respecting the Quality of the Work Environment) (12 2008)
Carbon monoxide	TWA	25 ppm	29 mg/m3	Canada. Alberta OELs (Occupational Health & Safety Code, Schedule 1, Table 2) (07 2009)
	TWA	25 ppm		Canada. British Columbia OELs. (Occupational Exposure Limits for Chemical Substances, Occupational Health and Safety Regulation 296/97, as amended) (07 2007)
	STEL	100 ppm		Canada. British Columbia OELs. (Occupational Exposure Limits for Chemical Substances, Occupational Health and Safety Regulation 296/97, as amended) (07 2007)
	TWA	25 ppm		Canada. Manitoba OELs (Reg. 217/2006, The Workplace Safety And Health Act) (03 2011)
	STEV	100 ppm		Canada. Ontario OELs. (Control of Exposure to Biological or Chemical Agents) (07 2010)
	TWAEV	25 ppm		Canada. Ontario OELs. (Control of Exposure to Biological or Chemical Agents) (07 2010)
	8 HR ACL	25 ppm		Canada. Saskatchewan OELs (Occupational Health and Safety Regulations, 1996, Table 21) (05 2009)
	15 MIN ACL	190 ppm		Canada. Saskatchewan OELs (Occupational Health and Safety Regulations, 1996, Table 21) (05 2009)
	TWA	35 ppm	40 mg/m3	Canada. Quebec OELs. (Ministry of Labor - Regulation Respecting the Quality of the Work Environment) (12 2008)
	STEL	200 ppm	230 mg/m3	Canada. Quebec OELs. (Ministry of Labor - Regulation Respecting the Quality of the Work Environment) (12 2008)
Nitrogen dioxide	STEL	5 ppm	9.4 mg/m3	Canada. Alberta OELs (Occupational Health & Safety Code, Schedule 1, Table 2) (07 2009)
	TWA	3 ppm	5.6 mg/m3	Canada. Alberta OELs (Occupational Health & Safety Code, Schedule 1, Table 2) (07 2009)
	CEILING	1 ppm		Canada. British Columbia OELs. (Occupational Exposure Limits for Chemical Substances, Occupational Health and Safety Regulation 296/97, as amended) (07 2007)
	TWA	0.2 ppm		Canada. Manitoba OELs (Reg. 217/2006, The Workplace Safety And Health Act) (03 2012)
	STEV	5 ppm		Canada. Ontario OELs. (Control of Exposure to Biological or Chemical Agents) (11 2010)
	TWAEV	3 ppm		Canada. Ontario OELs. (Control of Exposure to Biological or Chemical Agents) (11 2010)
	8 HR ACL	3 ppm		Canada. Saskatchewan OELs (Occupational Health and Safety Regulations, 1996, Table 21) (05 2009)
	15 MIN ACL	5 ppm		Canada. Saskatchewan OELs (Occupational Health and Safety Regulations, 1996, Table 21) (05 2009)
	TWA	3 ppm	5.6 mg/m3	Canada. Quebec OELs. (Ministry of Labor - Regulation Respecting the Quality of the Work Environment) (12 2008)

Ozone	STEL	0.3 ppm	0.6 mg/m3	Canada. Alberta OELs (Occupational Health & Safety Code, Schedule 1, Table 2) (07 2009)
	TWA	0.1 ppm	0.2 mg/m3	Canada. Alberta OELs (Occupational Health & Safety Code, Schedule 1, Table 2) (07 2009)
	TWA	0.05 ppm		Canada. British Columbia OELs. (Occupational Exposure Limits for Chemical Substances, Occupational Health and Safety Regulation 296/97, as amended) (07 2007)
	TWA	0.1 ppm		Canada. British Columbia OELs. (Occupational Exposure Limits for Chemical Substances, Occupational Health and Safety Regulation 296/97, as amended) (07 2007)
	TWA	0.08 ppm		Canada. British Columbia OELs. (Occupational Exposure Limits for Chemical Substances, Occupational Health and Safety Regulation 296/97, as amended) (07 2007)
	TWA	0.2 ppm		Canada. British Columbia OELs. (Occupational Exposure Limits for Chemical Substances, Occupational Health and Safety Regulation 296/97, as amended) (07 2007)
	TWAEV	0.1 ppm	0.2 mg/m3	Canada. Ontario OELs. (Control of Exposure to Biological or Chemical Agents) (07 2010)
	STEV	0.3 ppm	0.6 mg/m3	Canada. Ontario OELs. (Control of Exposure to Biological or Chemical Agents) (07 2010)
	15 MIN ACL	0.15 ppm		Canada. Saskatchewan OELs (Occupational Health and Safety Regulations, 1996, Table 21) (05 2009)
	8 HR ACL	0.05 ppm		Canada. Saskatchewan OELs (Occupational Health and Safety Regulations, 1996, Table 21) (05 2009)
	CEILING	0.1 ppm	0.2 mg/m3	Canada. Quebec OELs. (Ministry of Labor - Regulation Respecting the Quality of the Work Environment) (12 2008)
	TWA	0.20 ppm		Canada. Manitoba OELs (Reg. 217/2006, The Workplace Safety And Health Act) (03 2014)
	TWA	0.05 ppm		Canada. Manitoba OELs (Reg. 217/2006, The Workplace Safety And Health Act) (03 2014)
	TWA	0.08 ppm		Canada. Manitoba OELs (Reg. 217/2006, The Workplace Safety And Health Act) (03 2014)
	TWA	0.10 ppm		Canada. Manitoba OELs (Reg. 217/2006, The Workplace Safety And Health Act) (03 2014)
Manganese - as Mn	TWA		0.2 mg/m3	Canada. Alberta OELs (Occupational Health & Safety Code, Schedule 1, Table 2) (07 2009)
	TWA		0.2 mg/m3	Canada. British Columbia OELs. (Occupational Exposure Limits for Chemical Substances, Occupational Health and Safety Regulation 296/97, as amended) (07 2007)
	TWAEV		0.2 mg/m3	Canada. Ontario OELs. (Control of Exposure to Biological or Chemical Agents) (11 2010)
	8 HR ACL		0.2 mg/m3	Canada. Saskatchewan OELs (Occupational Health and Safety Regulations, 1996, Table 21) (05 2009)
	15 MIN ACL		0.6 mg/m3	Canada. Saskatchewan OELs (Occupational Health and Safety Regulations, 1996, Table 21) (05 2009)
Manganese - Fume. - as Mn	TWA		1 mg/m3	Canada. Quebec OELs. (Ministry of Labor - Regulation Respecting the Quality of the Work Environment) (12 2008)

Manganese - Dust. - as Mn	TWA	5 mg/m3	Canada. Quebec OELs. (Ministry of Labor - Regulation Respecting the Quality of the Work Environment) (12 2008)
Manganese - Fume. - as Mn	STEL	3 mg/m3	Canada. Quebec OELs. (Ministry of Labor - Regulation Respecting the Quality of the Work Environment) (12 2008)
Manganese - Respirable fraction. - as Mn	TWA	0.02 mg/m3	Canada. Manitoba OELs (Reg. 217/2006, The Workplace Safety And Health Act) (03 2014)
Manganese - Inhalable fraction. - as Mn	TWA	0.1 mg/m3	Canada. Manitoba OELs (Reg. 217/2006, The Workplace Safety And Health Act) (03 2014)
Chromium (VI) - as Cr	TWA	0.01 mg/m3	Canada. Alberta OELs (Occupational Health & Safety Code, Schedule 1, Table 2) (07 2009)
	TWA	0.05 mg/m3	Canada. Alberta OELs (Occupational Health & Safety Code, Schedule 1, Table 2) (07 2009)
	TWA	0.025 mg/m3	Canada. British Columbia OELs. (Occupational Exposure Limits for Chemical Substances, Occupational Health and Safety Regulation 296/97, as amended) (07 2007)
	CEILING	0.1 mg/m3	Canada. British Columbia OELs. (Occupational Exposure Limits for Chemical Substances, Occupational Health and Safety Regulation 296/97, as amended) (07 2007)
	TWA	0.05 mg/m3	Canada. Manitoba OELs (Reg. 217/2006, The Workplace Safety And Health Act) (03 2011)
	TWAEV	0.05 mg/m3	Canada. Ontario OELs. (Control of Exposure to Biological or Chemical Agents) (11 2010)
	8 HR ACL	0.01 mg/m3	Canada. Saskatchewan OELs (Occupational Health and Safety Regulations, 1996, Table 21) (05 2009)
	8 HR ACL	0.05 mg/m3	Canada. Saskatchewan OELs (Occupational Health and Safety Regulations, 1996, Table 21) (05 2009)
	15 MIN ACL	0.03 mg/m3	Canada. Saskatchewan OELs (Occupational Health and Safety Regulations, 1996, Table 21) (05 2009)
	15 MIN ACL	0.15 mg/m3	Canada. Saskatchewan OELs (Occupational Health and Safety Regulations, 1996, Table 21) (05 2009)
	TWA	0.05 mg/m3	Canada. Quebec OELs. (Ministry of Labor - Regulation Respecting the Quality of the Work Environment) (12 2008)
	TWA	0.01 mg/m3	Canada. Quebec OELs. (Ministry of Labor - Regulation Respecting the Quality of the Work Environment) (12 2008)
Nickel	TWA	1.5 mg/m3	Canada. Alberta OELs (Occupational Health & Safety Code, Schedule 1, Table 2) (07 2009)
	TWA	0.05 mg/m3	Canada. British Columbia OELs. (Occupational Exposure Limits for Chemical Substances, Occupational Health and Safety Regulation 296/97, as amended) (05 2013)
Nickel - Inhalable fraction.	TWA	1.5 mg/m3	Canada. Manitoba OELs (Reg. 217/2006, The Workplace Safety And Health Act) (03 2011)
Nickel - Inhalable - as Ni	TWAEV	1 mg/m3	Canada. Ontario OELs. (Control of Exposure to Biological or Chemical Agents) (11 2010)
Nickel - Inhalable fraction. - as Ni	8 HR ACL	1.5 mg/m3	Canada. Saskatchewan OELs (Occupational Health and Safety Regulations, 1996, Table 21) (05 2009)
	15 MIN ACL	3 mg/m3	Canada. Saskatchewan OELs (Occupational Health and Safety Regulations, 1996, Table 21) (05 2009)

Nickel	TWA	1 mg/m3	Canada. Quebec OELs. (Ministry of Labor - Regulation Respecting the Quality of the Work Environment) (12 2008)
Chromium oxide - as Cr	TWA	0.5 mg/m3	Canada. Alberta OELs (Occupational Health & Safety Code, Schedule 1, Table 2) (07 2009)
	TWA	0.5 mg/m3	Canada. British Columbia OELs. (Occupational Exposure Limits for Chemical Substances, Occupational Health and Safety Regulation 296/97, as amended) (09 2011)
	TWA	0.5 mg/m3	Canada. Manitoba OELs (Reg. 217/2006, The Workplace Safety And Health Act) (03 2012)
	TWAEV	0.5 mg/m3	Canada. Ontario OELs. (Control of Exposure to Biological or Chemical Agents) (11 2010)
	8 HR ACL	0.5 mg/m3	Canada. Saskatchewan OELs (Occupational Health and Safety Regulations, 1996, Table 21) (05 2009)
	15 MIN ACL	1.5 mg/m3	Canada. Saskatchewan OELs (Occupational Health and Safety Regulations, 1996, Table 21) (05 2009)

Additional exposure limits under the conditions of use: MEXICO

Chemical Identity	Type	Exposure Limit Values		Source
Carbon dioxide	CPT	5,000 ppm	9,000 mg/m3	Mexico. Occupational Exposure Limit Values (03 2000)
	CTT	15,000 ppm	27,000 mg/m3	Mexico. Occupational Exposure Limit Values (03 2000)
Carbon monoxide	CTT	400 ppm	400 mg/m3	Mexico. Occupational Exposure Limit Values (03 2000)
	CPT	50 ppm	55 mg/m3	Mexico. Occupational Exposure Limit Values (03 2000)
Nitrogen dioxide	CTT	5 ppm	10 mg/m3	Mexico. Occupational Exposure Limit Values (03 2000)
	CPT	3 ppm	6 mg/m3	Mexico. Occupational Exposure Limit Values (03 2000)
Ozone	P	0.1 ppm	0.2 mg/m3	Mexico. Occupational Exposure Limit Values (03 2000)
Manganese - as Mn	CPT		0.2 mg/m3	Mexico. Occupational Exposure Limit Values (03 2000)
Manganese - Fume. - as Mn	CPT		1 mg/m3	Mexico. Occupational Exposure Limit Values (03 2000)
	CTT		3 mg/m3	Mexico. Occupational Exposure Limit Values (03 2000)
Chromium (VI)	CPT		0.05 mg/m3	Mexico. Occupational Exposure Limit Values (03 2000)
	CPT		0.01 mg/m3	Mexico. Occupational Exposure Limit Values (03 2000)
Nickel	CPT		1 mg/m3	Mexico. Occupational Exposure Limit Values (03 2000)
Chromium oxide	CPT		0.5 mg/m3	Mexico. Occupational Exposure Limit Values (03 2000)

Appropriate Engineering Controls

Ventilation: Use enough ventilation, local exhaust at the arc, or both to keep the fumes and gases from the worker's breathing zone and the general area. Train the welder to keep his head out of the fumes. **Keep exposure as low as possible.**

Individual protection measures, such as personal protective equipment

General information:

Exposure Guidelines: Threshold Limit Values (TLVs) and Biological Exposure Indices (BEIs) are values published by the American Conference of Government Industrial Hygienists (ACGIH). ACGIH Statement of Positions Regarding the TLVs® and BEIs® states that the TLV-TWA should be used as a guide in the control of health hazards and should not be used to indicate a fine line between safe and dangerous exposures. See Section 10 for information on potential fume constituents of health interest. Threshold Limit Values are figures published by the American Conference of Government Industrial Hygienists.

Maximum Fume Exposure Guideline™ (MFEG)™ for this product (based on content of Manganese) is 0.1 mg/m3. This exposure guideline is calculated using the most conservative value of the ACGIH TLV or OSHA PEL for the stated substance.

Eye/face protection:

Wear helmet or use face shield with filter lens shade number 12 or darker for open arc processes. No specific lens shade recommendation for submerged arc processes. Shield others by providing screens and flash goggles.

Skin Protection

Hand Protection:

Wear protective gloves. Suitable gloves can be recommended by the glove supplier.

Other:

Protective Clothing: Wear hand, head, and body protection which help to prevent injury from radiation, sparks and electrical shock. See Z49.1. At a minimum this includes welder's gloves and a protective face shield, and may include arm protectors, aprons, hats, shoulder protection, as well as dark substantial clothing. Wear dry gloves free of holes or split seams. Train the welder not to permit electrically live parts or electrodes to contact skin . . . or clothing or gloves if they are wet. Insulate yourself from the work piece and ground using dry plywood, rubber mats or other dry insulation.

Respiratory Protection:

Keep your head out of fumes. Use enough ventilation and local exhaust to keep fumes and gases from your breathing zone and the general area. An approved respirator should be used unless exposure assessments are below applicable exposure limits.

Hygiene measures:

Do not eat, drink or smoke when using the product. Always observe good personal hygiene measures, such as washing after handling the material and before eating, drinking, and/or smoking. Routinely wash work clothing and protective equipment to remove contaminants.

Determine the composition and quantity of fumes and gases to which workers are exposed by taking an air sample from inside the welder's helmet if worn or in the worker's breathing zone. Improve ventilation if exposures are not below limits. See ANSI/AWS F1.1, F1.2, F1.3 and F1.5, available from the American Welding Society, www.aws.org.

9. PHYSICAL AND CHEMICAL PROPERTIES

Appearance:	Solid welding wire or rod
Physical state:	Solid
Form:	Solid
Color:	No data available.
Odor:	No data available.

Odor threshold:	No data available.
pH:	Not applicable
Melting point/freezing point:	No data available.
Initial boiling point and boiling range:	No data available.
Flash Point:	Not applicable
Evaporation rate:	Not applicable
Flammability (solid, gas):	No data available.
Upper/lower limit on flammability or explosive limits	
Flammability limit - upper (%):	No data available.
Flammability limit - lower (%):	No data available.
Explosive limit - upper (%):	No data available.
Explosive limit - lower (%):	No data available.
Vapor pressure:	Not applicable
Vapor density:	Not applicable
Relative density:	No data available.
Solubility(ies)	
Solubility in water:	No data available.
Solubility (other):	No data available.
Partition coefficient (n-octanol/water):	No data available.
Auto-ignition temperature:	No data available.
Decomposition temperature:	No data available.
Viscosity:	Not applicable

10. STABILITY AND REACTIVITY

Reactivity:	The product is non-reactive under normal conditions of use, storage and transport.
Chemical Stability:	Material is stable under normal conditions.
Possibility of Hazardous Reactions:	No data available.
Conditions to Avoid:	Avoid heat or contamination.
Incompatible Materials:	Strong oxidizing substances. Strong acids. Strong bases.
Hazardous Decomposition Products:	Welding fumes and gases cannot be classified simply. The composition and quantity of both are dependent upon the metal being welded, the process, procedure and electrodes used. Other conditions which also influence the composition and quantity of the fumes and gases to which workers may be exposed include: coatings on the metal being welded (such as paint, plating, or galvanizing), the number of welders and the volume of the worker area, the quality and amount of ventilation, the position of the welder's head with respect to the fume plume, as well as the presence of contaminants in the atmosphere (such as chlorinated hydrocarbon vapors from cleaning and degreasing activities.) When the electrode is consumed, the fume and gas decomposition products generated are different in percent and form from the ingredients listed in Section 3. Decomposition products of normal operation include those originating from the volatilization, reaction, or oxidation of the materials shown in Section 3, plus those from the base metal and coating, etc., as noted above. Reasonably expected fume constituents produced during arc welding include the oxides of iron, manganese and other metals present in

the welding consumable or base metal. Hexavalent chromium compounds may be in the welding fume of consumables or base metals which contain chromium. Gaseous and particulate fluoride may be in the welding fume of consumables which contain fluoride. Gaseous reaction products may include carbon monoxide and carbon dioxide. Ozone and nitrogen oxides may be formed by the radiation from the arc.

11. TOXICOLOGICAL INFORMATION

Information on likely routes of exposure

Ingestion: Health injuries from ingestion are not known or expected under normal use.

Inhalation: Potential chronic health hazards related to the use of welding consumables are most applicable to the inhalation route of exposure. Refer to Inhalation statements in Section 11.

Skin Contact: Arc rays can burn skin. Skin cancer has been reported.

Eye contact: Arc rays can injure eyes.

Symptoms related to the physical, chemical and toxicological characteristics

Inhalation: Short-term (acute) overexposure to welding fumes may result in discomfort such as metal fume fever, dizziness, nausea, or dryness or irritation of nose, throat, or eyes. May aggravate pre-existing respiratory problems (e.g. asthma, emphysema). Long-term (chronic) overexposure to welding fumes can lead to siderosis (iron deposits in lung), central nervous system effects, bronchitis and other pulmonary effects.

Information on toxicological effects

Acute toxicity (list all possible routes of exposure)

Oral

Product:	Not classified
Specified substance(s):	
Iron	LD 50 (Rat): 98.6 g/kg
Copper and/or copper alloys and compounds (as Cu)	LD 50 (Rat): 481 mg/kg

Dermal

Product:	Not classified
Specified substance(s):	
Cobalt and compounds (as Co)	LD 50LD 50 (Rat): > 2,000 mg/kg

Inhalation

Product:	Not classified
Specified substance(s):	
Cobalt and compounds (as Co)	LC 50 (Rat, 4 h): 165 mg/m3

Repeated Dose Toxicity

Product: Not classified

Skin Corrosion/Irritation

Product: Not classified

Serious Eye Damage/Eye Irritation

Product: Not classified

Respiratory or Skin Sensitization

Product: Not classified

Carcinogenicity

Product: Arc rays: Skin cancer has been reported.

IARC Monographs on the Evaluation of Carcinogenic Risks to Humans:

Nickel	Overall evaluation: 2B. Possibly carcinogenic to humans.
Cobalt and compounds (as Co)	Overall evaluation: 2B. Possibly carcinogenic to humans.

US. National Toxicology Program (NTP) Report on Carcinogens:

Nickel	Reasonably Anticipated to be a Human Carcinogen.

US. OSHA Specifically Regulated Substances (29 CFR 1910.1001-1050):

No carcinogenic components identified

Germ Cell Mutagenicity

In vitro

Product: Not classified

In vivo

Product: Not classified

Reproductive Toxicity

Product: Not classified

Specific Target Organ Toxicity - Single Exposure

Product: Not classified

Specific Target Organ Toxicity - Repeated Exposure

Product: Not classified

Aspiration Hazard

Product: Not classified

Other Effects: Organic polymers may be used in the manufacture of various welding consumables. Overexposure to their decomposition byproducts may result in a condition known as polymer fume fever. Polymer fume fever usually occurs within 4 to 8 hours of exposure with the presentation of flu like symptoms, including mild pulmonary irritation with or without an increase in body temperature. Signs of exposure can include an increase in white blood cell count. Resolution of symptoms typically occurs quickly, usually not lasting longer than 48 hours.

Symptoms related to the physical, chemical and toxicological characteristics under the condition of use

Inhalation:
Specified substance(s):

Manganese	Overexposure to manganese fumes may affect the brain and central nervous system, resulting in poor coordination, difficulty speaking, and arm or leg tremor. This condition can be irreversible.
Chromium (VI)	Chromates may cause ulceration, perforation of the nasal septum, and severe irritation of the bronchial tubes and lungs. Liver damage and allergic reactions, including skin rash, have been reported. Asthma has been reported in some sensitized individuals. Skin contact may result in irritation, ulceration, sensitization, and contact dermatitis. Chromates contain the hexavalent form of chromium. Hexavalent chromium and its compounds are on the IARC (International Agency for Research on Cancer) and NTP (National Toxicology Program) lists as posing a cancer risk to humans.

Nickel	Nickel and its compounds are on the IARC and NTP lists as posing respiratory cancer risk, and are skin sensitizers with symptoms ranging from slight itch to severe dermatitis.

Additional toxicological Information under the conditions of use:

Acute toxicity

Oral

Specified substance(s):

Chromium (VI)	LD 50 (Rat): 27 - 59 mg/kg

Inhalation

Specified substance(s):

Carbon dioxide	LC Lo (Human, 5 min): 90000 ppm
Carbon monoxide	LC 50 (Rat, 4 h): 1,300 mg/l
Nitrogen dioxide	LC 50 (Rat, 4 h): 88 ppm
Ozone	LC Lo (Human, 30 min): 50 ppm
Chromium (VI)	LC 50 (Rat, 4 h): 33 - 70 mg/m3

Carcinogenicity

IARC Monographs on the Evaluation of Carcinogenic Risks to Humans:

Specified substance(s):

Chromium (VI)	Overall evaluation: 1. Carcinogenic to humans.
Nickel	Overall evaluation: 2B. Possibly carcinogenic to humans.
Chromium oxide	Overall evaluation: 3. Not classifiable as to carcinogenicity to humans.

US. National Toxicology Program (NTP) Report on Carcinogens:

Specified substance(s):

Chromium (VI)	Known To Be Human Carcinogen.
Nickel	Reasonably Anticipated to be a Human Carcinogen.

US. OSHA Specifically Regulated Substances (29 CFR 1910.1001-1050):

Specified substance(s):

Chromium (VI)	Cancer

12. ECOLOGICAL INFORMATION

Ecotoxicity

Acute hazards to the aquatic environment:

Fish

Product:	Not classified.

Specified substance(s):

Nickel	LC 50 (Fathead minnow (Pimephales promelas), 96 h): 2.916 mg/l
Molybdenum	LC 50 (Rainbow trout,donaldson trout (Oncorhynchus mykiss), 96 h): 800 mg/l
Copper and/or copper alloys and compounds (as Cu)	LC 50 (Fathead minnow (Pimephales promelas), 96 h): 1.6 mg/l
Cobalt and compounds (as Co)	LC 50 (Rainbow trout,donaldson trout (Oncorhynchus mykiss), 28 d): > 0.17 - < 15.61 mg/l

Aquatic Invertebrates

Product:	Not classified.

Specified substance(s):

Nickel	EC50 (Water flea (Daphnia magna), 48 h): 1 mg/l
Manganese	EC50 (Water flea (Daphnia magna), 48 h): 40 mg/l
Copper and/or copper alloys and compounds (as Cu)	EC50 (Water flea (Daphnia magna), 48 h): 0.102 mg/l

Chronic hazards to the aquatic environment:

Fish

Product:	Not classified.

Aquatic Invertebrates

Product:	Not classified.

Toxicity to Aquatic Plants

Product:	Not classified.
Specified substance(s):	
Copper and/or copper alloys and compounds (as Cu)	LC 50 (Green algae (Scenedesmus dimorphus), 3 d): 0.0623 mg/l

Persistence and Degradability

Biodegradation

Product:	No data available.

Bioaccumulative Potential

Bioconcentration Factor (BCF)

Product:	No data available.
Specified substance(s):	
Nickel	Zebra mussel (Dreissena polymorpha), Bioconcentration Factor (BCF): 5,000 - 10,000 (Lotic) Bioconcentration factor calculated using dry weight tissue conc
Copper and/or copper alloys and compounds (as Cu)	Blue-green algae (Anacystis nidulans), Bioconcentration Factor (BCF): 36.01 (Static)
Cobalt and compounds (as Co)	Brown shrimp (Penaeus aztecus), Bioconcentration Factor (BCF): > 2,250 - < 2,500 (Static)

Mobility in Soil: No data available.

13. DISPOSAL CONSIDERATIONS

General information: The generation of waste should be avoided or minimized whenever possible. When practical, recycle in an environmentally acceptable, regulatory compliant manner. Dispose of non-recyclable products in accordance with all applicable Federal, State, Provincial, and Local requirements.

Disposal Instructions: Disposal of this product may be regulated as a Hazardous Waste. The welding consumable and/or by-product from the welding process (including, but not limited to slag, dust, etc.) may contain levels of leachable heavy metals such as Barium or Chromium. Prior to disposal, a representative sample must be analyzed in accordance with US EPA's Toxicity Characteristic Leaching Procedure (TCLP) to determine if any constituents exist above regulated threshold levels. Discard any product, residue, disposable container, or liner in an environmentally acceptable manner according to Federal, State and Local Regulations. Wash before disposal. Dispose to controlled facilities.

14. TRANSPORT INFORMATION

DOT

UN Number:	
UN Proper Shipping Name:	NOT DG REGULATED
Transport Hazard Class(es)	
Class:	NR
Label(s):	–
Packing Group:	–
Marine Pollutant:	Not regulated.
Special precautions for user:	–

IMDG

UN Number:	
UN Proper Shipping Name:	NOT DG REGULATED
Transport Hazard Class(es)	
Class:	NR
Label(s):	–
EmS No.:	
Packing Group:	–
Marine Pollutant:	Not regulated.
Special precautions for user:	–

IATA

UN Number:	
Proper Shipping Name:	NOT DG REGULATED
Transport Hazard Class(es):	
Class:	NR
Label(s):	–
Packing Group:	–
Environmental Hazards	Not regulated.
Special precautions for user:	–
Other information	
Passenger and cargo aircraft:	Allowed.
Cargo aircraft only:	Allowed.

TDG

UN Number:	
UN Proper Shipping Name:	NOT DG REGULATED
Transport Hazard Class(es)	
Class:	NR
Label(s):	–
Packing Group:	–
Marine Pollutant:	Not regulated.
Special precautions for user:	–

15. REGULATORY INFORMATION

Canadian Controlled Products Regulations: This product has been classified according to the hazard criteria of the Canadian Controlled Products Regulations, Section 33, and the MSDS contains all required information.

US Federal Regulations

TSCA Section 12(b) Export Notification (40 CFR 707, Subpt. D)

None present or none present in regulated quantities.

US. OSHA Specifically Regulated Substances (29 CFR 1910.1001-1050)

None present or none present in regulated quantities.

CERCLA Hazardous Substance List (40 CFR 302.4):

Chemical Identity	Reportable quantity
Chromium and chromium alloys or compounds (as Cr)	5000lbs.
Nickel	100lbs.
Manganese	Included in the regulation but with no data values. See regulation for further details.
Copper and/or copper alloys and compounds (as Cu)	5000lbs.

Cobalt and compounds (as Co)	Included in the regulation but with no data values. See regulation for further details.

Superfund Amendments and Reauthorization Act of 1986 (SARA)

Hazard categories
Acute (Immediate)
Chronic (Delayed)

SARA 302 Extremely Hazardous Substance
None present or none present in regulated quantities.

SARA 304 Emergency Release Notification

Chemical Identity	Reportable quantity
Chromium and chromium alloys or compounds (as Cr)	5000 lbs.
Nickel	100 lbs.
Manganese	Included in the regulation but with no data values. See regulation for further details.
Copper and/or copper alloys and compounds (as Cu)	5000 lbs.
Cobalt and compounds (as Co)	Included in the regulation but with no data values. See regulation for further details.

SARA 311/312 Hazardous Chemical

Chemical Identity	Threshold Planning Quantity
Iron	10000 lbs
Chromium and chromium alloys or compounds (as Cr)	10000 lbs
Nickel	10000 lbs
Manganese	10000 lbs
Silicon	10000 lbs
Molybdenum	10000 lbs
Copper and/or copper alloys and compounds (as Cu)	10000 lbs
Cobalt and compounds (as Co)	10000 lbs

SARA 313 (TRI Reporting)

Chemical Identity	Reporting threshold for other users	Reporting threshold for manufacturing and processing
Chromium and chromium alloys or compounds (as Cr)	10000 lbs	25000 lbs.
Nickel	10000 lbs	25000 lbs.
Manganese	10000 lbs	25000 lbs.
Cobalt and compounds (as Co)	10000 lbs	25000 lbs.

Clean Water Act Section 311 Hazardous Substances (40 CFR 117.3)
None present or none present in regulated quantities.

Clean Air Act (CAA) Section 112(r) Accidental Release Prevention (40 CFR 68.130):
None present or none present in regulated quantities.

US State Regulations

US. California Proposition 65
This product contains chemical(s) known to the State of California to cause cancer and/or to cause birth defects or other reproductive harm.

Nickel	Carcinogenic.
Cobalt and compounds (as Co)	Carcinogenic.

WARNING: This product contains or produces a chemical known to the State of California to cause cancer and birth defects (or other reproductive harm). (California Health & Safety Code Section 25249.5 et seq.)

US. New Jersey Worker and Community Right-to-Know Act

Chemical Identity
Chromium and chromium alloys or compounds (as Cr)
Nickel
Manganese

US. Massachusetts RTK - Substance List

Chemical Identity
Chromium and chromium alloys or compounds (as Cr)
Nickel

US. Pennsylvania RTK - Hazardous Substances

Chemical Identity
Chromium and chromium alloys or compounds (as Cr)
Nickel
Manganese

US. Rhode Island RTK
No ingredient regulated by RI Right-to-Know Law present.

Inventory Status:

Australia AICS:	On or in compliance with the inventory
Canada DSL Inventory List:	On or in compliance with the inventory
EINECS, ELINCS or NLP:	On or in compliance with the inventory
Japan (ENCS) List:	One or more components are not listed or are exempt from listing.
China Inv. Existing Chemical Substances:	On or in compliance with the inventory
Korea Existing Chemicals Inv. (KECI):	On or in compliance with the inventory
Canada NDSL Inventory:	One or more components are not listed or are exempt from listing.
Philippines PICCS:	On or in compliance with the inventory
US TSCA Inventory:	On or in compliance with the inventory
New Zealand Inventory of Chemicals:	On or in compliance with the inventory
Japan ISHL Listing:	One or more components are not listed or are exempt from listing.
Japan Pharmacopoeia Listing:	One or more components are not listed or are exempt from listing.

16. OTHER INFORMATION

Definitions:

The Maximum Fume Exposure Guideline™ (MFEG)™ is a guideline limit for total welding fume exposure for a specific consumable product which may be used by employers to manage worker exposure to welding fume where that product is used. The MFEG™ is an estimate of the level of total welding fume exposure for a given product above which the exposure limit for one of the fume constituents may be exceeded. The exposure limits referenced are the American Conference of Governmental Industrial Hygienists (ACGIH) Threshold Limit Value (TLV®) and the U.S. OSHA Permissible Exposure Limit (PEL) whichever limit is lower. The MFEG™ never exceeds 5 mg/m³ which is the maximum recommended exposure limit for total welding fume. **The MFEG™ is intended to serve as a general guideline to assist in the management of workplace exposure to welding fume and does not replace the regular measurement and analysis of worker exposure to individual welding fume constituents.**

The Maximum Dust Exposure Guideline™ (MDEG)™ is provided to assist with the management of workplace exposures where granular solid welding products or other materials are being utilized. It is derived from relevant compositional data and estimates the lowest level of total airborne dust exposure, for a given product, at which some specific constituent might potentially exceed its individual exposure limit. The specific exposure limits referenced are the American Conference of Governmental Industrial Hygienists (ACGIH) Threshold Limit Value

(TLV®) and the U. S. OSHA Permissible Exposure Limit (PEL), which ever value is the lowest. The MDEG™ is never greater than 10 mg/m³ as this is the airborne exposure guideline for total particulate (total dust). **The MDEG™ is intended to serve as a general guideline to assist in the management of workplace exposure and does not replace the regular measurement and analysis of worker exposure to individual airborne dust constituents.**

Revision Date:	05/22/2015 Most recent revision(s) are noted by the bold, double bars in the left-hand margin throughout this document.
Further Information:	Additional information is available by request.
Disclaimer:	The Lincoln Electric Company urges each end user and recipient of this SDS to study it carefully. See also www.lincolnelectric.com/safety. If necessary, consult an industrial hygienist or other expert to understand this information and safeguard the environment and protect workers from potential hazards associated with the handling or use of this product. This information is believed to be accurate as of the revision date shown above. However, no warranty, expressed or implied, is given. Because the conditions or methods of use are beyond Lincoln Electric's control, we assume no liability resulting from the use of this product. Regulatory requirements are subject to change and may differ between various locations. Compliance with all applicable Federal, State, Provincial, and local laws and regulations remain the responsibility of the user.

© 2015 Lincoln Global, Inc. All Rights Reserved.

A Subsidiary of The ESAB Group, Inc.

SAFETY DATA SHEET

Revised: May 1, 2014 Supersedes: April 3, 2013

Product Name: **ALUMINUM WELDING WIRE AND METALLIZING WIRE**
Emergency Phone: 1-717-637-8911 or 1-800-424-9300

1. CHEMICAL PRODUCT AND COMPANY IDENTIFICATION

Chemical Formula: Mixture.
Other Designations: AlcoTec ALMIGWELD (Aluminum spooled and drum packed electrode)
AlcoTec ALTIGWELD (Aluminum straight length welding rod)
Aluminum Metallizing Wire (coils and spools)
AlumaArc (Aluminum spooled electrode and straight length welding rod)
Manufacturer: AlcoTec Wire Corporation, 2750 Aero Park Drive, Traverse City, MI 49686-9263 USA
Product Use: Welding, Filler Metal, Metallizing, Brazing

2. HAZARDS INFORMATION

EMERGENCY OVERVIEW

Solid, silvery, odorless. Non-flammable as supplied. Small chips, fine turnings, and dust from processing may ignite readily.
Explosion/fire hazards may be present when (See Sections 5, 7 and 10 for additional information):

- Dust or fines are dispersed in the air.
- Fines or dust are in contact with other metal oxides (e.g., rust).
- Chips, fines, or dust are in contact with water.
- Molten aluminum is in contact with water/moisture or other metal oxides.

Dust or fume from welding can cause eye, skin, or upper respiratory tract irritation; metal fume fever; lung diseases, neurological effects and other systemic effects.

Potential Health Effects
EYES: Fume can cause irritation. Ultraviolet radiation from welding can cause flash burns.
SKIN: Can cause irritation. Ultraviolet radiation from welding can cause flash burns.
INHALATION: Can cause respiratory tract irritation, metal fume fever, and other health effects listed below:
Cancer hazard

Aluminum is welded in a protective, inert atmosphere such as argon or helium using the MIG or TIG process. Welding processes generate welding fumes and an intense ultraviolet radiation that results in the formation of ozone, and oxides of nitrogen. Ultraviolet radiation from welding can also cause flash burns to the eyes and skin.

- The International Agency for Research on Cancer has classified welding fumes as possibly carcinogenic to humans (Group 2B).
- Exposure to low levels of ozone can cause irritation of the eyes, nose, and throat. Inhalation can cause chest tightness, headache, shortness of breath, cough, wheeze, nausea, and narrowing of airways. Symptoms disappear when removed from exposure.
- Exposure to high levels of ozone may cause acute respiratory distress with shortness of breath, pulmonary changes, hemorrhage, and pulmonary edema (fluid in the lungs). Symptoms of pulmonary edema may be delayed for one or more hours. Exposure of test animals and human tissue to high concentrations has shown chromosomal changes, reproductive effects, blood changes, and death from lung congestion.
- Oxides of nitrogen can cause irritation of the eyes, skin (when moist), and respiratory tract. Exposure to high levels of nitrogen oxides can cause delayed pulmonary edema (fluid in the lungs) which may be fatal. Nitric oxide can cause formation of methemoglobin, which decreases the blood's ability to carry oxygen. Chronic overexposure can cause pulmonary fibrosis (scarring of the lungs).
- Overexposure to Aluminum dust/fines and fumes can cause reduced lung function and may be associated with neurological effects.

- Overexposure to magnesium oxide fumes can cause respiratory tract irritation and fever, chills, shortness of breath, and malaise (metal fume fever). Temporary symptoms can include fever, chills, nausea, vomiting, and muscular pain.
- Chronic exposure to inert dusts of silicon can cause increased airway resistance and contributes to chronic bronchitis. Intratracheal administration of silicon in rabbits produced significant pulmonary lesions.
- Exposure to zinc oxide fumes subsequent to burning, welding, and molten metal work can result in fever, chills, shortness of breath, and malaise (metal fume fever), and upper respiratory tract irritation. Temporary symptoms can include fever, chills, nausea, vomiting, and muscular pain. Exposure to dust or fines presents a low health risk by inhalation.
- Overexposure to manganese and manganese compounds above safe exposure limits can cause irreversible damage to the central nervous system, including the brain, symptoms of which may include slurred speech, lethargy, tremor, muscular weakness, psychological disturbances and spastic gait.
- Hexavalent chromium (Chrome VI) can cause asthma, kidney damage, primary irritant dermatitis, sensitization dermatitis, skin ulceration, and pulmonary edema (fluid in the lungs). Chronic inhalation or overexposure has been associated with lung, nasal, and gastrointestinal cancer. Hexavalent chromium is listed as carcinogenic to humans by IARC (Group 1)*. Chromium and some of its compounds are listed as carcinogenic by the NTP. Hexavalent chromium compounds may be generated during welding operations, with alloys containing chromium. A SIGNIFICANT AMOUNT OF THE CHROMIUM IN THE FUMES CAN BE HEXAVALENT CHROMIUM, WHICH HAS A VERY LOW EXPOSURE LIMIT, 0.005 mg/m^3 (5$\mu g/m^3$).
- The potential for overexposure to copper fume may exist when welding, flame cutting, etc. Overexposure to copper dust/mists can cause irritation of the eyes, skin, and upper respiratory tract. Chronic overexposure may result in blood disorders (anemia), and skin and hair discolorations. Overexposure to copper fume can result in respiratory tract irritation, nausea, and fever, chills, shortness of breath and malaise (metal fume fever).
- Nickel dust and fume can cause skin sensitization, allergic contact dermatitis, and conjunctivitis. Chronic inhalation of high levels of nickel can cause irritation of airways and lungs, lung fibrosis (scarring of the lungs), nasal septum perforation, nasal sinusitis, respiratory sensitization and asthma. Nickel compounds have been associated with cancer of lungs, larynx, and paranasal sinuses in humans. Nickel compounds are listed on the NTP and are listed as carcinogenic to humans by IARC (Group 1)*. Nickel metal is possibly carcinogenic to humans as defined by IARC (Group 2B)*.
- Beryllium can cause irritant dermatitis, allergic contact dermatitis, and skin granulomas. Inhalation of excessive levels of beryllium can result in acute pneumonitis (inflammation of the lung tissues).

  Beryllium can cause lung sensitization in susceptible individuals. Chronic inhalation of dust and fumes by these sensitized individuals can result in a serious, progressive disease called Chronic Beryllium Disease (CBD). This disease, often misdiagnosed as sarcoidosis, is an allergic condition in which the lung tissues become inflamed. This inflammation, sometimes accompanied with fibrosis (lung scarring), restricts the uptake of oxygen into the blood stream. CBD can, over time, be fatal.

  Inhalation of beryllium has produced lung tumors in animals. Beryllium is listed on the NTP and is known to be carcinogenic to humans by IARC (Group 1)*. (*See Section 8)*
- Lead inorganic dust and fume is listed as a possibly carcinogenic to humans by IARC Group 2B*. Overexposure to lead dust or fume can cause weakness of extremities (peripheral neuropathy), stomach disturbances, harm to the kidneys, liver, central nervous system, blood and blood forming tissues, and reproductive organs. Overexposure to lead has been associated with human reproductive effects (e.g. reduced fertility and damage to the fetus of exposed pregnant women). Lead is a cumulative toxic metal by inhalation or ingestion.
- Warning: This product contains or produces a chemical known to the State of California to cause cancer and birth defects (or other reproductive harm). (California Health & safety Code 25249.5 et seq.)

Medical conditions aggravated by exposure to the product:

Chronic lung disease, skin rashes, and asthma.

***IARC CLASSIFICATIONS**:

Group 1: The agent is carcinogenic to humans.

There is sufficient evidence that a casual relationship existed between exposure to the agent and human cancer.

Group 2B: The agent is possibly carcinogenic to humans.

Generally includes agents for which there is limited evidence in humans in the absence of sufficient evidence in experimental animals.

3. COMPOSITION INFORMATION ON INGREDIENTS

Alloy Ingredients: (% by weight shown as a maximum or a range, except for Aluminum, which is a minimum % by weight)

Alloy	Si	Fe	Cu	Mn	Mg	Cr	Ni	Zn	Zr	Ti	Others Each [1]	Others Total	Al
1100	0.95 =	Si + Fe	0.05-0.20	0.05	--	--	--	0.10	--	--	0.05	0.15	99.00
1350	0.10	0.40	0.05	0.01	--	0.01	--	0.05	--	--	0.03 [3]	0.10	99.50
1188	0.06	0.06	0.005	0.01	0.01	--	--	0.03	--	0.01	0.01 [4]	--	99.88
1199	0.006	0.006	0.006	0.002	0.006	--	--	0.006	--	0.002	0.002 [7]	--	99.99
2319	0.20	0.30	5.8-6.8	0.20-0.40	0.02	--	--	0.10	--	0.10-0.20	0.05 [5]	0.15	Rmnd [2]
4043	4.5-6.0	0.8	0.30	0.05	0.05	--	--	0.10	--	0.20	0.05	0.15	Rmnd [2]
4047 (718)	11.0-13.0	0.8	0.30	0.15	0.10	--	--	0.20	--	--	0.05	0.15	Rmnd [2]
4145 (716)	9.3-10.7	0.8	3.3-4.7	0.15	0.15	0.15	--	0.20	--	--	0.05	0.15	Rmnd [2]
4643	3.6-4.6	0.8	0.10	0.05	0.10-0.30	--	--	0.10	--	0.15	0.05	0.15	Rmnd [2]
5087	0..25	0.40	0.05	0.7-1.1	4.5-5.2	0.05-0.25	--	0.25	0.10-0.20	0.15	0.05	0.15	Rmnd [2]
5183	0.40	0.40	0.10	0.50-1.0	4.3-5.2	0.05-0.25	--	0.25	--	0.15	0.05	0.15	Rmnd [2]
5356	0.25	0.40	0.10	0.05-0.20	4.5-5.5	0.05-0.20	--	0.10	--	0.06-0.20	0.05	0.15	Rmnd [2]
5554	0.25	0.40	0.10	0.50-1.0	2.4-3.0	0.05-0.20	--	0.25	--	0.05-0.20	0.05	0.15	Rmnd [2]
5556	0.25	0.40	0.10	0.50-1.0	4.7-5.5	0.05-0.20	--	0.25	--	0.05-0.20	0.05	0.15	Rmnd [2]
5654	0.45 =	Si + Fe	0.05	0.01	3.1-3.9	0.15-0.35	--	0.20	--	0.05-0.15	0.05	0.15	Rmnd [2]
5754	0.40	0.40	0.10	0.50	2.6-3.6	0.30	--	0.20	--	0.15	0.05	0.15	Rmnd [2]
206.0	0.10	0.15	4.2-5.0	0.20-0.50	0.15-0.35	--	0.05	0.10	--	0.15-0.30	0.05 [6]	0.15	Rmnd [2]
C355.0 (4009)	4.5-5.5	0.20	1.0-1.5	0.10	0.40-0.6	--	--	0.10	--	0.20	0.05	0.15	Rmnd [2]
A356.0 (4008)	6.5-7.5	0.20	0.20	0.10	0.25-0.45	--	--	0.10	--	0.20	0.05	0.15	Rmnd [2]
357.0	6.5-7.5	0.15	0.05	0.03	0.45-0.6	--	--	0.05	--	0.20	0.05	0.15	Rmnd [2]

Notes:

1. Beryllium shall not exceed 0.0003 percent.
2. Rmnd = remainder.
3. 1350 may contain Gallium, 0.03% (max.), Boron 0.05% (max.), and Vanadium plus Titanium, 0.02% (max.).
4. 1188 may contain Gallium, 0.03% (max.), and Vanadium, 0.05% (max.).
5. 2319 contains Vanadium, 0.05-0.15% and Zirconium, 0.10-0.25%.
6. 206.0 may contain Tin, 0.05% (max.).
7. 1199 may contain 0.005% each (max.) of Gallium and Vanadium.

4. FIRST AID MEASURES

EYES: Flush eyes with plenty of water or saline for at least 15 minutes. Consult a physician.

SKIN: Wash thoroughly with soap and water. Consult a physician if irritation persists.

INHALATION: Remove to fresh air. Check for clear airway, breathing, and presence of pulse. Provide CPR for persons without pulse or respirations. Consult a physician immediately.

5. FIRE FIGHTING MEASURES

FLAMMABLE PROPERTIES: Non-flammable as shipped. Small chips and dust from processing may ignite readily.

FIRE/EXPLOSION: May be a potential hazard under the following conditions:

- Dusts or fines dispersed in the air can be explosive.
- Chips, fines and dust in contact with water can generate flammable/explosive hydrogen gas. These gases could present an explosion hazard in confined or poorly ventilated spaces.
- Fines and dust in contact with certain metal oxides (e.g., rust). A thermite reaction, with considerable heat generation, can be initiated by a weak ignition source.
- Molten aluminum in contact with water/moisture or other metal oxides (e.g., rust). Moisture entrapped by molten aluminum can be explosive. Contact of molten aluminum with other metal oxides can initiate a thermite reaction.

EXTINGUISHING MEDIA: Use fire fighting methods and materials that are appropriate for surrounding fire. Use coarse water spray on chips or turnings. For fines, dust or molten aluminum, use Class D extinguishing agents.

DO NOT USE: Halogenated extinguishing agents on small chips/fines. Do not use water in fighting fires around molten aluminum.

FIRE FIGHTING INSTRUCTIONS: Fire fighters should wear NIOSH approved, positive pressure, self-contained breathing apparatus and full protective clothing when appropriate.

6. ACCIDENTAL RELEASE MEASURES

SMALL/LARGE SPILL: If molten: Contain the flow using dry sand or salt flux as a dam. Do not use shovels or hand tools to halt the flow of molten aluminum. Allow the spill to cool before remelting as scrap.

7. HANDLING AND STORAGE

Product should be kept dry. Avoid generating dust. Avoid contact with sharp edges or heated metal. Hot and cold aluminum are not visually different.

REQUIREMENTS FOR PROCESSES WHICH GENERATE DUSTS OR FINES

- If processing of these products includes operations where dust or extremely fine particulate is generated, obtain and follow the safety procedures and equipment guides contained in Aluminum Association Bulletin F1 and National Fire Protection Association (NFPA) brochures listed in Section 16. Use non-sparking handling equipment. Cover and reseal partially empty containers. Provide grounding and bonding where necessary to prevent accumulation of static charges during aluminum dust handling and transfer operations. (See Section15).
- Local ventilation and vacuum systems must be designed to handle explosive dusts. Dry vacuums and electrostatic precipitators must not be used. Dust collection systems must be dedicated to aluminum dust only and should be clearly labeled as such. Do not co-mingle fines of aluminum with fines of iron, iron oxide (rust) or other metal oxides.
- Do not allow chips, fines or dust to contact water, particularly in enclosed areas.
- Avoid all ignition sources. Good housekeeping practices must be maintained.

REQUIREMENTS FOR REMELTING OF ALUMINUM SCRAP MATERIAL AND/OR INGOT

- Molten aluminum and water can be an explosive combination. The risk is greatest when there is sufficient molten aluminum to entrap or seal off the water. Water and other forms of contamination on or contained in aluminum scrap or remelt ingot are known to have caused explosions in melting operations. While the products may have minimal surface roughness and internal voids, there remains the possibility of moisture contamination or entrapment. If confined, even a few drops of water can lead to violent explosions.

- All tooling and containers which come in contact with molten aluminum must be preheated or specially coated and rust free. Molds and ladles must be preheated or oiled before casting. Any surfaces that may contact molten aluminum (i.e., concrete) should be specially coated.
- Drops of molten aluminum in water (e.g. from plasma arc cutting), while not normally an explosion hazard, can generate enough flammable hydrogen gas to present an explosion hazard. Circulation of the water and removal of the aluminum particles minimize the hazards.

During melting operations, the following minimum guidelines should be observed:

- Inspect all aluminum materials before furnace charging and completely remove surface contamination such as water, ice, snow, deposits of grease and oil or other surface contamination resulting from weather exposure, shipment, or storage.
- Store materials in dry, heated areas with any cracks or cavities pointed downwards.
- Preheat and dry large or heavy items such as ingot adequately before charging into a furnace containing molten aluminum. This is typically done by use of a drying oven or homogenizing furnace. The drying cycle should bring the internal metal temperature of the coldest item of the batch to 400^0F and then hold at that temperature for 6 hours.

8. EXPOSURE CONTROLS/PERSONAL PROTECTION

ENGINEERING CONTROLS: Use with adequate explosion-proof ventilation to meet the limits listed in Section 2.

RESPIRATORY PROTECTION: Use NIOSH-approved respiratory protection [dust, fume, high efficiency dust/fume mask for lead, or other (organic vapor)] as specified by an Industrial Hygienist or other qualified professional if concentrations exceed the limits listed in Section 2.

EYE PROTECTION: Welders should use appropriate equipment (e.g. welder's helmet, face shield, filter lens) to prevent eye irritation or flash burns.

SKIN PROTECTION: Wear impervious gloves to avoid any skin injury.

- The presence of airborne beryllium has been detected during the welding of aluminum alloys with beryllium content at only 0.002% by weight. In accordance with OSHA 29 CFR 1910.252: Welding or cutting operations involving beryllium-containing base or filler metals shall be done using local exhaust ventilation and airline respirators unless atmospheric tests under the most adverse conditions have established that the workers' exposures is within the acceptable concentrations defined by 29 CFR 1910.1000. In all cases, workers in the immediate vicinity of the welding or cutting operations shall be protected as necessary by local exhaust ventilation or airline respirators.
- Good industrial hygiene practices, including reducing occupational exposures to as low as reasonably achievable, are recommended. Where employees are exposed to beryllium above the PEL or where excessive contamination of clothing with beryllium is possible, adequate protective clothing should be provided to prevent contamination of personal clothing. Personnel assigned to launder such clothing should be advised of beryllium's presence and potential health effects.
- Sampling to establish lead level exposure is advised where exposure to airborne particulate or fumes is possible. Consult OSHA Lead Standard 29 CFR 1910.1025 for specific health/industrial hygiene precautions and requirements to follow when handling lead compounds.

Revised: May 1, 2014 Supersedes: April 3, 2013

Product Name: **ALUMINUM WELDING WIRE AND METALLIZING WIRE**

EXPOSURE LIMITS:

			EXPOSURE LIMITS (TWA in mg/m^3 unless noted)	
Component	**CAS No.**	**Form**	**ACGIH TLV**	**OSHA PEL**
Aluminum	7429-90-5	Total dust, fume Respirable	 1	15 5
Beryllium and Beryllium Compounds	7440-41-7	All compounds as Be	0.00005	0.002, 0.005 Ceiling, 0.025 for 30 minutes
Chromium	7440-47-3	Metals Cr II compounds Cr III compounds, inorganic Cr VI compounds, water-soluble Cr VI compounds, insoluble	0.5 ---- 0.5 as Cr 0.05 as Cr 0.01 as Cr	1 0.5 as Cr 0.5 as Cr 0.005 as Cr VI 0.005 as Cr VI
Copper	7440-50-8	Fume Dust/mist	0.2 1	0.1 1
Gallium	7440-55-3		None	None
Iron	7439-89-6	Oxide dust & fume (as Fe)	5 (respirable)	10
Lead	7439-92-1	Elemental and inorganic compounds	0.05 as Pb	0.05 as Pb
Magnesium	7439-95-4	Oxide fume	10 (inhalable)	15 (total particulate)
Manganese	7439-96-5	Elemental and inorganic compounds	0.02 (respirable) 0.1 (inhalable)	5 (ceiling)
Manganese	7439-96-5	Fume (as Mn)	0.02 (respirable) 0.1 (inhalable)	5 (ceiling)
Nickel	7440-02-0	Metal Soluble inorganic compounds Insoluble inorganic compounds	1.5 as Ni 0.1 as Ni (inhalable) 0.2 as Ni (inhalable)	1 as Ni 1 as Ni 1 as Ni
Silicon	7440-21-3	Total dust Respirable	TLV withdrawn ----	15 5
Titanium	7440-32-6	Oxide dust	10	15 (total particulate)
Vanadium	7440-62-2	Respirable dust Fume	0.05 as V_2O_5 (inhalable)	0.5 (ceiling) as V_2O_5 0.1 (ceiling) as V_2O_5
Zinc	7440-66-6	Oxide fume Total Oxide dust Respirable oxide dust	---- ---- 2, 10 (STEL)	5 15 5
Zirconium	7440-67-7	Elemental	5, 10 (STEL)	5 (compounds only)

Revised: May 1, 2014 Supersedes: April 3, 2013

Product Name: **ALUMINUM WELDING WIRE AND METALLIZING WIRE**

Possible hazards during processing by welding, or arc spray metallizing

	ACGIH TLV	OSHA PEL
Ozone (light, heavy work)	0.1, 0.05 ppm	0.1 ppm
Nitric oxide	25 ppm	25 ppm
Nitrogen dioxide	3, 5ppm (STEL)	5 ppm (ceiling)

9. PHYSICAL AND CHEMICAL PROPERTIES

APPEARANCE:	Solid
BOILING POINT:	Not applicable
FREEZE-MELT POINT:	970°-1215°F (521°-657°C)
VAPOR PRESSURE (mm):	Not applicable
VAPOR DENSITY (air = 1):	Not applicable
SOLUBILITY IN WATER:	None
SPECIFIC GRAVITY:	Not determined
DENSITY:	Approximately 0.1 lb/in^3
pH:	Not applicable
ODOR:	None
ODOR THRESHOLD (ppm):	Not applicable
COEFFICIENT OF WATER/OIL DISTRIBUTION:	Not applicable

10. STABILITY AND REACTIVITY

Stable under normal conditions of use, storage, and transportation as shipped. Chips, fines, dust and molten aluminum are considerable more reactive with the following:

- **Water:** Slowly generates flammable/explosive hydrogen gas and heat. Generation rate is greatly increased with smaller particles (e.g., fines and dusts).
  Molten aluminum can react violently/explosively with water or moisture, particularly when the water is entrapped.
- **Heat:** Oxidizes at a rate dependent upon temperature and particle size.
- **Strong oxidizers:** Violent reaction with considerable heat generation.
  Can react explosively with nitrates (e.g., ammonium nitrate and fertilizers containing nitrate) when heated or molten.
- **Acids and alkalis:** Reacts to generate flammable/explosive hydrogen gas. Generation rate is greatly increased with smaller particles (e.g., fines and dusts).
- **Halogenated compounds:** Many halogenated hydrocarbons, including halogenated fire extinguishing agents, can react violently with finely divided aluminum.
- **Iron oxide (rust) and other metal oxides (e.g., copper and lead oxides):** A violent thermite reaction generating considerable heat can occur. Reaction with aluminum fines and dusts requires only very weak ignition sources for initiation.
  Molten aluminum can react violently without external ignition source.
- **Iron powder:** An explosive reaction forming hydrogen gas occurs when heated above 1470°F (600°C).

11. TOXICOLOGICAL INFORMATION

LD_{50} or LC_{LO} found for oral, dermal or inhalation routes of administration:

Nickel:	oral rat LD_{50}: 9000 mg/kg body weight
Silicon:	oral rat LD_{50}: 3160 mg/kg body weight
Manganese:	oral rat LD_{50}: 9000 mg/kg body weight
Iron:	intraperitoneal rabbit LD_{LO}: 20 mg/kg - no toxic effect noted

12. ECOLOGICAL INFORMATION

ECOTOXICOLOGICAL/CHEMICAL FATE INFORMATION: Not available.

Revised: May 1, 2014 Supersedes: April 3, 2013

Product Name: **ALUMINUM WELDING WIRE AND METALLIZING WIRE**

13. DISPOSAL CONSIDERATION

Collect scrap for remelting and recycling. To maintain metal purity, it may be desirable to segregate this scrap from other alloys.

RCRA Status: Characterize in accordance with 40 CFR 261 or state equivalent.

14. TRANSPORT INFORMATION

USA DOT: Not Regulated - Enter the proper freight classification, "SDS Number," and "Product Name" on the shipping paperwork.

Canadian TDG Hazard Class & PIN: Not regulated.

15. REGULATORY INFORMATION

All electrical equipment must be suitable for use in hazardous atmospheres involving aluminum powder in accordance with 29 CFR 1910.307. The National Electrical Code, NFPA 70, contains guidelines for determining the type and design of equipment and installation, which will meet this requirement.

U.S. Federal Regulations

TSCA STATUS: All components of this product are listed on the TSCA inventory.

CERCLA HAZARDOUS SUBSTANCES: Beryllium, Chromium, Chromium compounds, Copper, Lead, Manganese, Nickel, Zinc.

SARA TITLE III:

Section 311/312 Physical and Health Hazard Categories: Immediate (acute), delayed (chronic) if particulates/fumes are generated during processing.

Section 313 Toxic Chemicals: Aluminum (fume/dust), Beryllium, Chromium, Copper, Lead, Manganese, Nickel, Vanadium (fume/dust), and Zinc (fume/dust).

State Regulations

PENNSYLVANIA "Special Hazardous Substance": Beryllium; Nickel; Chromium compounds, hexavalent.

International Regulations

CANADIAN WHMIS CLASSIFICATION: Class D; Division 2, Subdivision A

CANADIAN DOMESTIC SUBSTANCES LIST: All components of this product are listed on the Canadian DSL.

EUROPEAN COMMUNITY: All components of this product are listed on ECOIN, the European Core Inventory.

16. OTHER INFORMATION

STATUS: Changes in Section 8.

PREPARED BY: Hazardous Materials Control Committee

- OSHA Standard 29 CFR 1910.1025 (Lead)
- OSHA Standard 29 CFR 1910.252
- ANSI 249.1, Safety in Welding and Cutting
- Aluminum Association's Bulletin F-1,"Guidelines for Handling Aluminum Fines Generated during Various Aluminum Fabricating Operations." The Aluminum Association, 900 19th Street, NW, Washington, DC 20006.
- NFPA 65, Standard for Processing and Finishing of Aluminum (NFPA phone: 800-344-3555)
- NFPA 70, Standard for National Electrical Code
- NFPA 77, Standard for Static Electricity
- Guide to Occupational Exposure Values-I 997, Compiled by the American Conference of Governmental Industrial Hygienists (ACGIH).
- Dept. of Health and Human Services, NIOSH: Registry of Toxic Effects of Chemical Substances, 1985-86 Edition

Revised: May 1, 2014 Supersedes: April 3, 2013

Product Name: **ALUMINUM WELDING WIRE AND METALLIZING WIRE**

- Sax, N. Irving: Dangerous Properties of Industrial Materials, Van Nostrand Reinhold Co., Inc., 1984

INFORMATION HEREIN IS GIVEN IN GOOD FAITH AS AUTHORITATIVE AND VALID; HOWEVER, NO WARRANTY, EXPRESS OR IMPLIED, CAN BE MADE.

LEGEND:

ACGIH	American Conference of Governmental Industrial Hygienists	atm	atmosphere
AICS	Australian Inventory of Chemical Substances	cm	centimeter
CAS	Chemical Abstract Services	g	gram
CERCLA	Comprehensive Environmental Response, Compensation, & Liability Act	in	inch
CFR	Code of Federal Regulations	kg	kilogram
DOT	Department of Transportation	lb.	pound
DSL	Domestic Substances List (Canada)	m	meter
ECOIN	European Core Inventory	mg	milligram
EPA	Environmental Protection Agency	mm	millimeter
IARC	International Agency for Research on Cancer	n.o.s.	not otherwise specified
LC_{50}	Lethal Concentration (50 percent kill)	ppb	parts per billion
LC_{Lo}	Lowest published lethal concentration	ppm	parts per million
LD_{50}	Lethal dose (50 percent kill)	psia	pounds/square inch absolute
LD_{Lo}	Lowest published lethal dose	ug	microgram
MIG	Metal Inert Gas		
NFPA	National Fire Protection Association		
NIOSH	National Institute for Occupational Safety and Health		
NTP	National Toxology Program		
OSHA	Occupational Safety and Health Administration		
PEL	Permissible Exposure Limit		
PIN	Product Identification Number		
RCA	Resource Conservation and Recovery Act		
SARA	Superfund Amendments and Reauthorization Act		
STEL	Short Term Exposure Limit		
TCLP	Toxic Chemicals Leachate Program		
TDG	Transportation of Dangerous Goods		
TIG	Tungsten Inert Gas		
TLV	Threshold Limit Value		
TSCA	Toxic Substances Control Act		
TWA	Time weighted Average		

Safety Data Sheet

acc. to OSHA HCS

Printing date 03/18/2016 Reviewed on 03/15/2016

1 Identification

· **Product identifier**

· **Trade name: Avesta 309L**
· **CAS Number:** -
· **EINECS Number:** -
· **Application of the substance / the mixture** Shielded Metal Arc Welding Electrode

· **Details of the supplier of the safety data sheet**
· **Manufacturer/Supplier:**
voestalpine Böhler Welding Austria GmbH
Böhler-Welding-St. 1
8605 Kapfenberg

Telefon: +43 (0) 3862 301-28-299
Fax: +43 (0) 3862 301-95-299
www.voestalpine.com/welding

· **Information department:**
Research and Development
DI Stefan Schormann
+43 3862 301 - 28291; stefan.schormann@voestalpine.com
· **Emergency telephone number:** +43 3862 301-0

*

2 Hazard(s) identification

· **Classification of the substance or mixture**
The product is not classified according to the Globally Harmonized System (GHS).

· **Label elements** -
· **GHS label elements** Void
· **Hazard pictograms** Void
· **Signal word** Void
· **Hazard statements** Void
· **NFPA ratings (scale 0 - 4)**

Health = 1
Fire = 0
Reactivity = 0

· **HMIS-ratings (scale 0 - 4)**

Health = *0
Fire = 0
Reactivity = 0

· **Other hazards**
· **Results of PBT and vPvB assessment**
· **PBT:** Not applicable.
· **vPvB:** Not applicable.

*

3 Composition/information on ingredients

· **Chemical characterization: Mixtures**
· **Description:** Mixture of the substances listed below with nonhazardous additions.

(Contd. on page 2)

Safety Data Sheet

acc. to OSHA HCS

Printing date 03/18/2016 Reviewed on 03/15/2016

Trade name: Avesta 309L

(Contd. of page 1)

· **Dangerous components:**

CAS: 7440-47-3 EINECS: 231-157-5	chromium		12.5-25%
CAS: 7440-02-0 EINECS: 231-111-4	nickel	Carc. 2, H351; STOT RE 1, H372 Skin Sens. 1, H317	5-12.5%
CAS: 13463-67-7 EINECS: 236-675-5	titanium dioxide	Carc. 2, H351	5-12.5%
CAS: 14808-60-7 EINECS: 238-878-4	silicon dioxide	Carc. 1A, H350 Acute Tox. 4, H332	2.5-5%
CAS: 7439-96-5 EINECS: 231-105-1	manganese		0.1-2.5%
CAS: 1312-76-1	silicato de potasio	Eye Dam. 1, H318 Skin Irrit. 2, H315	0.1-2.5%

*

4 First-aid measures

· **Description of first aid measures**
· **General information:** Seek medical treatment.
· **After inhalation:** Supply fresh air; consult doctor in case of complaints.
· **After skin contact:** Seek immediate medical advice.
· **After eye contact:** Rinse opened eye for several minutes under running water.
· **After swallowing:** Seek medical treatment.
· **Most important symptoms and effects, both acute and delayed** No further relevant information available.
· **Indication of any immediate medical attention and special treatment needed**
No further relevant information available.

*

5 Fire-fighting measures

· **Extinguishing media**
· **Suitable extinguishing agents:** Suitable to surrounding conditions
· **Special hazards arising from the substance or mixture** No further relevant information available.
· **Advice for firefighters** -
· **Protective equipment:** No special measures required.

*

6 Accidental release measures

· **Personal precautions, protective equipment and emergency procedures**
Ensure adequate ventilation
Use respiratory protective device against the effects of fumes/dust/aerosol.
· **Environmental precautions:** Do not allow to enter sewers/ surface or ground water.
· **Methods and material for containment and cleaning up:** Pick up mechanically.
· **Reference to other sections**
See Section 7 for information on safe handling.
See Section 8 for information on personal protection equipment.
See Section 13 for disposal information.

(Contd. on page 3)

Safety Data Sheet

acc. to OSHA HCS

Printing date 03/18/2016 Reviewed on 03/15/2016

Trade name: Avesta 309L

(Contd. of page 2)

*

7 Handling and storage

· **Handling:**
· **Precautions for safe handling** Ensure that suitable extractors are available on processing machines
· **Information about protection against explosions and fires:** No special measures required.

· **Conditions for safe storage, including any incompatibilities**
· **Storage:**
· **Requirements to be met by storerooms and receptacles:** No special requirements.
· **Information about storage in one common storage facility:** Not required.
· **Further information about storage conditions:** None.
· **Specific end use(s)** No further relevant information available.

*

8 Exposure controls/personal protection

· **Control parameters**
· **Components with limit values that require monitoring at the workplace:**
The following constituents are the only constituents of the product which have a PEL, TLV or other recommended exposure limit.
At this time, the remaining constituent has no known exposure limits.

7440-47-3 chromium	
PEL	Long-term value: 1* 0.5** mg/m³ *metal;**inorganic compds., as Cr
REL	Long-term value: 0.5* mg/m³ *metal+inorg.compds.as Cr;See Pocket Guide App. C
TLV	Long-term value: 0.5 mg/m³
7440-02-0 nickel	
PEL	Long-term value: 1 mg/m³
REL	Long-term value: 0.015 mg/m³ as Ni; See Pocket Guide App. A
TLV	Long-term value: 1.5* mg/m³ elemental, *inhalable fraction
13463-67-7 titanium dioxide	
PEL	Long-term value: 15* mg/m³ *total dust
REL	See Pocket Guide App. A
TLV	Long-term value: 10 mg/m³ withdrawn from NIC
14808-60-7 silicon dioxide	
PEL	see Quartz listing
REL	Long-term value: 0.05* mg/m³ *respirable dust; See Pocket Guide App. A
TLV	Long-term value: 0.025* mg/m³ *as respirable fraction
7439-96-5 manganese	
PEL	Ceiling limit value: 5 mg/m³ as Mn
REL	Short-term value: 3 mg/m³ Long-term value: 1 mg/m³ fume, as Mn

(Contd. on page 4)

(Contd. of page 3)

TLV	Long-term value: 0.02* 0.1* mg/m³ as Mn; *respirable **inhalable fraction

· **Additional information:** The lists that were valid during the creation were used as basis.

· **Exposure controls**
· **Personal protective equipment:**
· **General protective and hygienic measures:** Wash hands before breaks and at the end of work.
· **Breathing equipment:** Filter P2
· **Protection of hands:**
The glove material has to be impermeable and resistant to the product/ the substance/ the preparation.
Due to missing tests no recommendation to the glove material can be given for the product/ the preparation/ the chemical mixture.
Selection of the glove material on consideration of the penetration times, rates of diffusion and the degradation
Heat protection gloves (non-combustible)
· **Penetration time of glove material**
The exact break through time has to be found out by the manufacturer of the protective gloves and has to be observed.
· **Eye protection:** Not required.
· **Body protection:**
Protective work clothing
Wear hand, head, and body protection which help to prevent injury from radiation, sparks, and electrical shock. See ANSI Z49.1. At a minimum this includes welder's gloves and a protective face shield, and may include arm protectors, aprons, hats, shoulder protection, and well as dark substantial clothing. Train the welder not to touch live electrical parts and to insulate himself from work and ground.

9 Physical and chemical properties

· **Information on basic physical and chemical properties**
· **General Information**
· **Appearance:**

Form:	Solid
Color:	According to product specification
· **Odor:**	Odorless
· **Odor threshold:**	Not determined.
· **pH-value:**	Not applicable.
· **Flash point:**	Not applicable.
· **Flammability (solid, gaseous):**	Not determined.
· **Decomposition temperature:**	Not determined.
· **Auto igniting:**	Product is not selfigniting.
· **Danger of explosion:**	Product does not present an explosion hazard.
· **Explosion limits:**	
Lower:	Not determined.
Upper:	Not determined.
Relative density	Not determined.
Vapor density	Not applicable.
Evaporation rate	Not applicable.
Water:	Insoluble.
· **Partition coefficient (n-octanol/water):**	Not determined.

(Contd. on page 5)

Safety Data Sheet

acc. to OSHA HCS

Printing date 03/18/2016 Reviewed on 03/15/2016

Trade name: Avesta 309L

(Contd. of page 4)

· **Dynamic:**	Not applicable.
· **Kinematic:**	Not applicable.
· **Organic solvents:**	0.0 %
· **Other information**	No further relevant information available.

*

10 Stability and reactivity

· **Reactivity** No further relevant information available.
· **Chemical stability**
· **Thermal decomposition / conditions to be avoided:**
No decomposition if used and stored according to specifications.
· **Possibility of hazardous reactions** Attacks materials containing glass and silicate.
· **Conditions to avoid** No further relevant information available.
· **Incompatible materials:** No further relevant information available.
· **Hazardous decomposition products:**
Reasonably expected fume constituents of this product would include:
Cupper oxide.
copper oxide.
Chromoxide.
Nickel oxide.
The present OSHA PEL (Permissible Exposure Limit) - published in the U.S. Federal Register 71, pages: 10099-10385 - for hexavalent Chromium (Cr +6) is 0.005 mg/m3 which will result in a significant reduction from the 5 mg/m3 general welding fume (NOC) level. It applies to soluble chromates of the types found in covered stainless electrode fumes.
Reasonably expected gaseous constituents would include Carbon monoxide and Carbon dioxide. Ozone and nitrogen oxides may be formed by the radiation from the arc. One recommended way to determine the composition and quantity of fumes and gases to which workers are exposed is to take an air sample from inside the welder's helmet if worn or in the worker's breathing zone. See ANSI/AWS F1.1 and ANSI/AWS F1.2-1992. In order to determine and evaluation of the existing problem areas, the standards EN ISO15011 –parts 1,4 can also be applied.

*

11 Toxicological information

· **Information on toxicological effects**
· **Acute toxicity:**
· **Primary irritant effect:**
· **on the skin:** No irritant effect.
· **on the eye:** No irritating effect.
· **Sensitization:** No sensitizing effects known.
· **Additional toxicological information:**
Workers exposed to hexavalent chrome (CrVI) are at an increased risk of developing lung cancer. It is also possible that occupational exposure to (CrVI) may result in asthma, and damage to the nasal epithelia and skin. To avoid any risk follow the requirements of the OSHA rule for hexavalent chromium published on February 28, 2006 in the U.S. Federal Register, pages:10099-10385 which established an 8-hour time-weighted average (TWA) exposure limit of 5 micrograms of hexavalent chrome per cubic meter of air (5 µg/m³). This is a considerable reduction from the previous PEL of 1 milligram per 10 cubic meters of air (1 mg/10 m³, or 100 µg/m³) reported as Probably Chromium(VI)oxide, which is equivalent to a limit of 52 µg/m³ as (Cr+6)). This rule also contains ancillary provisions for worker protection such as requirements for exposure determination, preferred exposure control methods, including a compliance alternative for a small sector for which the new PEL is infeasible, respiratory protection, protective clothing and equipment, hygiene areas and practices, medical surveillance, recordkeeping, and start-up dates that include four years for the implementation of engineering controls to meet the PEL.

(Contd. on page 6)

Safety Data Sheet

acc. to OSHA HCS

Printing date 03/18/2016 Reviewed on 03/15/2016

Trade name: Avesta 309L

(Contd. of page 5)

· **Carcinogenic categories**

· **IARC (International Agency for Research on Cancer)**		
7440-47-3	chromium	3
7440-02-0	nickel	1
13463-67-7	titanium dioxide	2B
14808-60-7	silicon dioxide	1
7789-75-5	calcium fluoride	3

· **NTP (National Toxicology Program)**		
7440-02-0	nickel	R
14808-60-7	silicon dioxide	K

· **OSHA-Ca (Occupational Safety & Health Administration)**

None of the ingredients is listed.

12 Ecological information

· **Toxicity**
· **Aquatic toxicity:** No further relevant information available.
· **Persistence and degradability** No further relevant information available.
· **Behavior in environmental systems:**
· **Bioaccumulative potential** No further relevant information available.
· **Mobility in soil** No further relevant information available.
· **Additional ecological information:**
· **General notes:** Water hazard class 1 (Self-assessment): slightly hazardous for water
· **Results of PBT and vPvB assessment**
· **PBT:** Not applicable.
· **vPvB:** Not applicable.
· **Other adverse effects** No further relevant information available.

13 Disposal considerations

· **Waste treatment methods**
· **Recommendation:** Must be specially treated adhering to official regulations.

· **Uncleaned packagings:**
· **Recommendation:** Disposal must be made according to official regulations.

*

14 Transport information

· **UN-Number**	Void
· **DOT, ADR, ADN, IMDG, IATA**	Void
· **UN proper shipping name**	
· **DOT, ADR, ADN, IMDG, IATA**	Void
· **Transport hazard class(es)**	
· **DOT, ADR, ADN, IMDG**	
· **Class**	Void

(Contd. on page 7)

Safety Data Sheet

acc. to OSHA HCS

Printing date 03/18/2016 Reviewed on 03/15/2016

Trade name: Avesta 309L

(Contd. of page 6)

· **IATA**	
· **Class**	Void -
· **Packing group**	
· **DOT, ADR, IMDG, IATA**	Void
· **Environmental hazards:**	
· **Marine pollutant:**	No
· **Special precautions for user**	Not applicable.
· **Transport in bulk according to Annex II of MARPOL73/78 and the IBC Code**	Not applicable.
· **Transport/Additional information:**	Not dangerous according to the above specifications.
· **UN "Model Regulation":**	Void

*

15 Regulatory information

· **Safety, health and environmental regulations/legislation specific for the substance or mixture**
No further relevant information available.

· **Sara**

· **Section 355 (extremely hazardous substances):**	
7440-47-3	chromium

· **Section 313 (Specific toxic chemical listings):**	
7440-47-3	chromium
7440-02-0	nickel
7439-96-5	manganese
7440-50-8	copper
1308-38-9	dichromium trioxide

· **TSCA (Toxic Substances Control Act):**	
7439-89-6	iron
7440-47-3	chromium
7440-02-0	nickel
13463-67-7	titanium dioxide
68476-25-5	Kali-Feldspat
1317-65-3	calcium carbonate
14808-60-7	silicon dioxide
7439-96-5	manganese
1312-76-1	silicato de potasio
	Betonit
7789-75-5	calcium fluoride
1309-38-2	Magnetit
1313-59-3	Sodium Oxide
7439-98-7	molybdenum
7440-50-8	copper

(Contd. on page 8)

Safety Data Sheet

acc. to OSHA HCS

Printing date 03/18/2016 Reviewed on 03/15/2016

Trade name: Avesta 309L

(Contd. of page 7)

· **Proposition 65**

· **Chemicals known to cause cancer:**

7440-02-0	nickel
13463-67-7	titanium dioxide
14808-60-7	silicon dioxide

· **Chemicals known to cause reproductive toxicity for females:**

None of the ingredients is listed.

· **Chemicals known to cause reproductive toxicity for males:**

None of the ingredients is listed.

· **Chemicals known to cause developmental toxicity:**

None of the ingredients is listed.

· **Cancerogenity categories**

· **EPA (Environmental Protection Agency)**

7440-47-3	chromium	D
7439-96-5	manganese	D
7440-50-8	copper	D
1308-38-9	dichromium trioxide	D, CBD

· **TLV (Threshold Limit Value established by ACGIH)**

7440-47-3	chromium	A4
7440-02-0	nickel	A5
13463-67-7	titanium dioxide	A4
14808-60-7	silicon dioxide	A2
7789-75-5	calcium fluoride	A4
7439-98-7	molybdenum	A3
1308-38-9	dichromium trioxide	A4

· **NIOSH-Ca (National Institute for Occupational Safety and Health)**

7440-02-0	nickel
13463-67-7	titanium dioxide
14808-60-7	silicon dioxide

· **GHS label elements** Void
· **Hazard pictograms** Void
· **Signal word** Void
· **Hazard statements** Void
· **Chemical safety assessment:** A Chemical Safety Assessment has not been carried out.

*

16 Other information

This information is based on our present knowledge. However, this shall not constitute a guarantee for any specific product features and shall not establish a legally valid contractual relationship.

· **Additional information:**
Recommendations for exposure scenarios, measures for risk management and identification of working conditions under which metals, metal alloys and products made of metal can be safely worked can be found attached.
Detailed information can be found on our webpage www.voestalpine.com (Environment, REACH at voestalpine).

(Contd. on page 9)

Safety Data Sheet

acc. to OSHA HCS

Printing date 03/18/2016 Reviewed on 03/15/2016

Trade name: Avesta 309L

(Contd. of page 8)

Welding Exposure Scenario WES - ENGL **EWA2011**

Recommendations for Exposure Scenarios, Risk Management Measures and to identify Operational Conditions under which metals, alloys and metallic articles may be safely welded

Welding/Brazing produces fumes which can affect human health and the environment. Fumes are a varying mixture of airborne gases and fine particles which, if inhaled or swallowed, constitute a health hazard. The degree of risk will depend on the composition of the fume, concentration of the fume and duration of exposure. The fume composition is dependent upon the material being worked, the process and consumables being used, coatings on the work such as paint, galvanizing or plating, oil or contaminants from cleaning and degreasing activities. A systematic approach to the assessment of exposure is necessary, taking into account the particular circumstances for the operator and ancillary worker that can be exposed.

Considering the emission of fumes when welding, brazing or cutting of metals, it is recommended to (1) arrange risk management measures through applying general information and guidelines provided by this exposure scenario and (2) using the information provided by the Safety Data Sheet, issued in accordance with REACH, by the welding consumable manufacturer.

The employer shall ensure that the risk from welding fumes to the safety and health of workers is eliminated or reduced to a minimum. The following principle shall be applied:

1- Select the applicable process/material combinations with the lowest class, whenever possible.
2- Set welding process with the lowest emission parameter.
3- Apply the relevant collective protective measure in accordance with class number. In general, the use of PPE is taken into account after all other measures is applied.
4- Wear the relevant personal protective equipment in accordance with the duty cycle.

In addition, compliance with the National Regulations regarding the exposure to welding fumes of welders and related personnel shall be verified.

In the table "Risk Management Measures for individual process / material combinations" below, reference is made to the following standards for collective and personal protection measures:

ISO 4063	Welding process Reference Numbers according to ISO 4063
EN ISO 15012-1:2004	Health and safety in welding and allied processes - Requirements testing and marking of equipment or air filtration - Part 1: Testing of the separation efficiency for welding fume
EN ISO 15012-2:2008	Health and safety in welding and allied processes - Requirements, testing and marking of equipment for air filtration - Part 2: Determination of the minimum air volume flow rate of captor hoods and nozzles
EN 149:2001	Respiratory protective devices - Filtering half masks to protect against particles - Requirements, testing, marking (FFP1 - FFP2 - FFP3)
EN 1835:2000	Respiratory protective devices. Light duty construction compressed air line breathing apparatus incorporating a helmet or a hood. Requirements, testing, marking (LDH1 - LDH2 - LDH3).
EN 12941:1998	Respiratory protective devices. Powered filtering devices incorporating a helmet or a hood. Requirements, testing, marking (TH1 - TH2 - TH3).
EN 143:2000	Respiratory protective devices — Particle filters — Requirements, testing, marking (P1, P2, P3)
Directive 1998/24/EC	Article 6.2 on the protection of the health and safety of workers from the risks related to chemical agents at work
BGR 190	Benutzung von Atemschutzgeräten (Berufsgenossenschaftliche Regel für Sicherheit und Gesundheit bei der Arbeit)
TRGS 528	Schweisstechnische Arbeiten (Technische Regeln für Gefahrstoffe)

Also in the table "Risk Management Measures for individual process / material combinations", reference is made to footnotes.
The description of these footnotes:

1 Class: approximate ranking to mitigate risk by selecting process/material combinations with the lowest value. Identified collective and individual risk management measures shall be applied
2 Personal Protective Equipment (PPE) required avoiding exceeding the National Exposure Limit Value (DC: Duty cycle expressed on 8 hours)
3 General Ventilation (GV) Low. With additional Local Exhaust Ventilation (LEV) and extracted air to the outside, the GV or LEV capacity may be reduced to 1/5 of the original requirement.
4 General Ventilation (GV) Medium (double compared to Low)
5 Filtrating half mask (FFP2)
6 When an alloyed consumable is used, measures from "Class V" are required
7 General Ventilation (GV) Low. When no Local Exhaust Ventilation, the ventilation requirement is 5-fold
8 Filtrating half mask (FFP3), helmet with powered filters (TH2/P2), or helmet with external air supply (LDH2)
9 Reduced (negative) pressured Area: A separate, ventilated area where reduced (negative) pressure, compared to the surrounded area, is maintained
10 Local Exhaust Ventilation (LEV) High, extraction at source (includes table, hood, arm or torch extraction)
11 Helmet with powered filters (TH3/P3), or helmet with external air supply (LDH3)
12 Local Exhaust Ventilation (LEV) Low, extraction at source (includes table, hood, arm or torch extraction)
13 Local Exhaust Ventilation (LEV) Medium, extraction at source (includes table, hood, arm or torch extraction)
14 Recommended measures to comply with national maximum allowable limits. Extracted fumes, for all materials except unalloyed steel and aluminium, shall be filtered before release in the outside environment.
15 A confined space, despite its name, is not necessarily small. Examples of confined spaces include ship, silos, vats, utility vaults, tanks, etc.
16 Improved helmet, designed to avoid direct flow of welding fumes inside
n.a. Not applicable
n.r. Not recommended

(Contd. on page 10)

Safety Data Sheet

acc. to OSHA HCS

Printing date 03/18/2016 Reviewed on 03/15/2016

Trade name: Avesta 309L

(Contd. of page 9)

Welding Exposure Scenario WES - ENGL **EWA2011**

Risk Management Measures for individual process / base material combinations

Class[1]	Process (according to ISO 4063)	Base Materials	Remarks	Ventilation / Extraction / Filtration[14]	PPE[2] DC<15%	PPE[2] DC>15%
			Non-confined space[15]			
I	GTAW 141	All	Except Aluminium	GV low[3]	n.r.	n.r.
	SAW 12					
	Autogeneous 3					
	PAW 15					
	ESW/EGW 72/73					
	Resistance 2					
	Stud welding 78					
	Solid state 521					
	Gases Brazing 9	All	Except Cd- alloys	GV low[3]	n.r.	n.r.
II	GTAW 141	Aluminium	n.a.	GV medium[4]	n.a.	FFP2[5]
III	MMAW 111	All	Except Be-, V- , Mn-, Ni- alloys and Stainless[6]	GV low[7] LEV low[12]	Improved helmet[16]	FFP2[5]
	FCAW 136/137	All	Except Stainless and Ni- alloys [6]			
	GMAW 131/135	All	Except Cu-, Be-, V-alloys[6]			
	Powder Plasma Arc 152	All	Except Be-, V-, Cu- , Mn-, Ni-alloys and Stainless [6]			
IV	All processes class I	Painted / primed / oiled	No Pb containing primer	GV low[3]	FFP2[5]	FFP3, TH2/P2, or LDH2[8]
	All processes class III	Painted / primed / oiled	No Pb containing primer	GV low [7] LEV low[12]		
V	MMAW 111	Stainless, Ni-, Be-, and V-alloys	n.a.	LEV high[10]	TH3/P3, LDH3[11]	TH3/P3, LDH3[11]
	FCAW 136/137	Stainless, Mn- and Ni-alloys				
	GMAW 131	Cu-alloys				
	Powder Plasma Arc 152	Stainless, Mn-, Ni-, and Cu- alloys				
VI	GMAW 131	Be-, and V-alloys	n.a.	Reduced (negative) pressured area [9] LEV low[12]	TH3/P3, LDH3[11]	TH3/P3, LDH3[11]
	Powder Plasma Arc 152					
VII	Self shielded FCAW 114	Un-, high alloyed steel	Cored wire, not containing Ba	Reduced (negative) pressured area [9] LEV medium[13]	TH3/P3, LDH3[11]	TH3/P3, LDH3[11]
	Self shielded FCAW 114	Un-, high alloyed steel	Cored wire, containing Ba	Reduced (negative) pressured area [9] LEV high[10]		
	All	Painted / primed	Paint / Primer containing Pb			
	Arc Gouging and Cutting 8	All	n.a.			
	Thermal Spray	All	n.a.			
	Gases Brazing 9	Cd- alloys	n.a.			
			Closed system or Confined space[15]			
I	Laser Welding 52	All	Closed system	GV medium[4]	n.a.	n.a.
	Laser Cutting 84					
	Electron Beam 51					
VIII	All	All	Confined space	LEV high[10] External air supply	LDH3[11]	LDH3[11]

·

· ***Training hints*** -

· ***Department issuing SDS:*** *Research and Development*

· ***Contact:*** *DI Stefan Schormann*

· ***Date of preparation / last revision*** *03/18/2016 / 2*

· ***Abbreviations and acronyms:***

ADR: Accord européen sur le transport des marchandises dangereuses par Route (European Agreement concerning the International Carriage of Dangerous Goods by Road)
IMDG: International Maritime Code for Dangerous Goods
DOT: US Department of Transportation
IATA: International Air Transport Association

(Contd. on page 11)

Safety Data Sheet

acc. to OSHA HCS

Printing date 03/18/2016 Reviewed on 03/15/2016

Trade name: Avesta 309L

(Contd. of page 10)

ACGIH: American Conference of Governmental Industrial Hygienists
EINECS: European Inventory of Existing Commercial Chemical Substances
ELINCS: European List of Notified Chemical Substances
CAS: Chemical Abstracts Service (division of the American Chemical Society)
NFPA: National Fire Protection Association (USA)
HMIS: Hazardous Materials Identification System (USA)
TRGS: Technische Regeln für Gefahrstoffe (Technical Rules for Dangerous Substances, BAuA, Germany)
PBT: Persistent, Bioaccumulative and Toxic
vPvB: very Persistent and very Bioaccumulative
NIOSH: National Institute for Occupational Safety
OSHA: Occupational Safety & Health
TLV: Threshold Limit Value
PEL: Permissible Exposure Limit
REL: Recommended Exposure Limit
Acute Tox. 4: Acute toxicity, Hazard Category 4
Skin Irrit. 2: Skin corrosion/irritation, Hazard Category 2
Eye Dam. 1: Serious eye damage/eye irritation, Hazard Category 1
Skin Sens. 1: Sensitisation - Skin, Hazard Category 1
Carc. 1A: Carcinogenicity, Hazard Category 1A
Carc. 2: Carcinogenicity, Hazard Category 2
STOT RE 1: Specific target organ toxicity - Repeated exposure, Hazard Category 1

· **** Data compared to the previous version altered.***

SAFETY DATA SHEET

This Safety Data Sheet complies with Regulation (EC) No. 1907/2006, ISO 11014-1 and ANSI Z400.1

1. PRODUCT AND COMPANY IDENTIFICATION

Product Name: ESAB BARE ALUMINUM WELDING ELECTRODES AND RODS
Application: Arc Welding & Gas Welding
Classification: AWS A5.10
Supplier: THE ESAB GROUP, INC., 801 Wilson Avenue, Hanover, PA 17331
Telephone No.: 1-717-637-8911, 1-800-933-7070
Emergency No.: 1-717-637-8911 and 1-800-424-9300 (CHEMTREC)
Web site: www.esabna.com

2. HAZARDS IDENTIFICATION

Emergency Overview: Metal wires or rods in varying colors. These products are normally not considered hazardous as shipped. Gloves should be worn when handling to prevent cuts and abrasions.

Skin contact is normally no hazard but should be avoided to prevent possible allergic reactions.

Persons with a pacemaker should not go near welding or cutting operations until they have consulted their doctor and obtained information from the manufacturer of the device.

When these products are used in a welding process, the most important hazards are heat, radiation, electric shock and welding fumes.

Heat: Spatter and melting metal can cause burn injuries and start fires.

Radiation: Arc rays can severely damage eyes or skin.

Electricity: Electric shock can kill.

Fumes: Overexposure to welding fumes may result in symptoms like metal fume fever, dizziness, nausea, dryness or irritation of the nose, throat or eyes. Chronic overexposure to welding fumes may affect pulmonary function. Prolonged inhalation of chromium compounds above safe exposure limits can cause cancer. Overexposure to manganese and manganese compounds above safe exposure limits can cause irreversible damage to the central nervous system, including the brain, symptoms of which may include slurred speech, lethargy, tremor, muscular weakness, psychological disturbances and spastic gait.

3. COMPOSITION/INFORMATION ON INGREDIENTS

These products are continuous metal wire and solid metal rods.

Ingredients	REACH Reg. #	CAS#	EINECS#	Hazard classification(1)	IARC(2)	NTP(3)	OSHA List(4)
Aluminum	--	7429-90-5	231-072-3	F; R15 R10 stabilized F; R15-17 pyrophoric	--	--	--
Beryllium	--	7440-41-7	231-150-7	Carc. Cat. 2; R49 T+; R26 T; R25-48/23 Xi; R36/37/38 R43	1	K	--
Chromium	--	7440-47-3	231-157-5	No	--	--	--
Copper	--	7440-50-8	231-159-6	No	--	--	--
Iron	01-2119462838-24	7439-89-6	231-096-4	No	--	--	--
Magnesium	--	7439-95-4	231-104-6	No	--	--	--
Manganese	--	7439-96-5	231-105-1	No	--	--	--
Silicon	--	7440-21-3	231-130-8	No	--	--	--
Titanium	--	7440-32-6	231-142-3	No	--	--	--
Zinc	--	7440-66-6	231-175-3	F; R15-17 N; R50-53	--	--	--
Zirconium	--	7440-67-7	231-176-9	F; R15-17	--	--	--

(1) Hazard Classification according to European Council Directive 67/548/EEC, for R-phrases, see Section 16.
(2) Evaluation according to the International Agency for Research on Cancer.
1 –Carcinogenic to humans. 2A – Probably carcinogenic to humans. 2B – Possibly carcinogenic to humans.
(3) Classification according to the 11th Report on Carcinogens, published by the US National Toxicology Program.
K – Known Carcinogen S – Suspect Carcinogen
(4) Carcinogen listing according to OSHA, Occupational Safety & Health Administration (USA).

APPROXIMATE COMPOSITION (Wt. %)

Single values are maximums, except for Aluminum, which is a minimum.

Product Trade Name	**OK Tigrod 1100** and **OK Autrod 1100**	**OK Tigrod 4043** and **OK Autrod 4043**	**OK Tigrod 4047** and **OK Autrod 4047**	**OK Tigrod 5087** and **OK Autrod 5087**	**OK Tigrod 5183** and **OK Autrod 5183**	**OK Tigrod 5356** and **OK Autrod 5356**	**OK Tigrod 5554** and **OK Autrod 5554**	**OK Tigrod 5556** and **OK Autrod 5556**	**OK Tigrod 5754** and **OK Autrod 5754**
Aluminum	99.00	Rmnd [1]	Rmnd [1]	Rmnd [1]	Rmnd [1]	Rmnd [1]	Rmnd [1]	Rmnd [1]	Rmnd [1]
Beryllium	<0.0003	<0.0003	<0.0003	<0.0003	<0.0003	<0.0003	<0.0003	<0.0003	<0.0003
Chromium	--	--	--	0.05-0.25	0.05-0.25	0.05-0.20	0.05-0.20	0.05-0.20	0.30
Copper	0.05-0.20	0.30	0.30	0.05	0.10	0.10	0.10	0.10	0.10
Iron	0.95 (Fe + Si)	0.8	0.8	0.40	0.40	0.40	0.40	0.40	0.40
Magnesium	--	0.05	0.10	4.5-5.2	4.3-5.2	4.5-5.5	2.4-3.0	4.7-5.5	2.6-3.6
Manganese	0.05	0.05	0.15	0.7-1.1	0.50-1.0	0.05-0.20	0.50-1.0	0.50-1.0	0.50
Silicon	0.95 (Fe + Si)	4.5-6.0	11.0-13.0	0.25	0.40	0.25	0.25	0.25	0.40
Titanium	--	0.20	--	0.15	0.15	0.06-0.20	0.05-0.20	0.05-0.20	0.15
Zinc	0.10	0.10	0.20	0.25	0.25	0.10	0.25	0.25	0.20
Zirconium	--	--	--	0.10-0.20	--	--	--	--	--
AWS Classification	R1100 ER1100	R4043 ER4043	R4047 ER4047	None	R5183 ER5183	R5356 ER5356	R5554 ER5554	R5556 ER5556	None

[1] Rmnd = remainder.

4. FIRST AID MEASURES

Inhalation: If breathing has stopped, perform artificial respiration and obtain medical assistance immediately! If breathing is difficult, provide fresh air and call physician.

Eye contact: For radiation burns due to arc flash, see physician. To remove dusts or fumes flush with water for at least fifteen minutes. If irritation persists, obtain medical assistance.

Skin contact: For skin burns from arc radiation, promptly flush with cold water. Get medical attention for burns or irritations that persist. To remove dust or particles wash with mild soap and water.

Electric shock: Disconnect and turn off the power. Use a nonconductive material to pull victim away from contact with live parts or wires. If not breathing, begin artificial respiration, preferably mouth-to-mouth. If no detectable pulse, begin Cardio Pulmonary Resuscitation (CPR). Immediately call a physician.

General: Move to fresh air and call for medical aid.

5. FIRE FIGHTING MEASURES

No specific recommendations for welding consumables. Welding arcs and sparks can ignite combustible and flammable materials. Use the extinguishing media recommended for the burning materials and fire situation. Wear self-contained breathing apparatus as fumes or vapors may be harmful.

6. ACCIDENTAL RELEASE MEASURES

Solid objects may be picked up and placed into a container. Liquids or pastes should be scooped up and placed into a container. Wear proper protective equipment while handling these materials. Do not discard as refuse.

Personal precautions: refer to Section 8.

Environmental precautions: refer to Section 13.

7. HANDLING AND STORAGE

Handling:

Handle with care to avoid stings and cuts. Wear gloves when handling welding consumables. Avoid exposure to dust. Do not ingest.

Some individuals can develop an allergic reaction to certain materials. Retain all warning and identity labels.

Storage:

Keep separate from chemical substances like acids and strong bases, which could cause chemical reactions.

8. EXPOSURE CONTROL/PERSONAL PROTECTION

Avoid exposure to welding fumes, radiation, spatter, electric shock, heated materials and dust.

Engineering measures:

Ensure sufficient ventilation, local exhaust, or both, to keep welding fumes and gases from breathing zone and general area. Keep working place and protective clothing clean and dry. Train welders to avoid contact with live electrical parts and insulate conductive parts. Check condition of protective clothing and equipment on a regular basis.

Personal protective equipment:

Use respirator or air supplied respirator when welding or brazing in a confined space, or where local exhaust or ventilation is not sufficient to keep exposure values within safe limits. Use special care when welding painted or coated steels since hazardous substances from the coating may be emitted. Wear hand, head, eyes, ear and body protection like welders gloves, helmet or face shield with filter lens, safety boots, apron, arm and shoulder protection. Keep protective clothing clean and dry.

Use industrial hygiene monitoring equipment to ensure that exposure does not exceed applicable national exposure limits. The following limits can be used as guidance. For information about welding fume analysis refer to Section 10.

Substance		CAS#	ACGIH TLV [1] mg/m^3	OSHA PEL [2] mg/m^3
Aluminum	(metal and insoluble compounds)	7429-90-5	1**	15*, 5**
Beryllium and beryllium compounds	(as Be)	7440-41-7	0.00005***	0.002, 0.005 Ceiling, 0.025 for 30 minutes
Chromium Compounds		7440-47-3		
Metal	(as Cr)		0.5	1
Cr (VI), inorganic, insoluble			0.01 (as Cr)	0.005 (as Cr Vi)
Cr (VI), inorganic, water-soluble			0.05 (as Cr)	0.005 (as Cr Vi)
Copper	(fume, as Cu)	7440-50-8	0.2	0.1
	(dust and mists, as Cu)		1	1
Iron	(as iron oxide)	7439-89-6	5**	10 (fume)
Magnesium		7439-95-4	None	None
Manganese and inorganic compounds	(as Mn)	7439-96-5	0.02**, 0.1***	5 Ceiling
Manganese, fume, as Mn		7439-96-5	0.02**, 0.1***	5 Ceiling
Silicon		7440-21-3	Withdrawn	15*, 5**
Titanium (metal)		7440-32-6	None	None
Zinc (metal)		7440-66-6	None	None
Zirconium & Zirconium Compounds	(as Zr)	7440-67-7	5, 10 (STEL)	5

(1) Threshold Limit Values according to American Conference of Governmental Industrial Hygienists, 2014

(2) Permissible Exposure Limits according to the Occupational Safety & Health Administration (USA)

Unless noted, all values are for 8 hour time weighted averages (TWA).

* Total dust, ** Respirable fraction, *** Inhalable fraction.

NOTE: Some of these products may not contain all of the materials listed. For details of composition, refer to the COMPOSITION TABLES in Section 3.

9. PHYSICAL AND CHEMICAL PROPERTIES

Appearance: Solid, non-volatile with varying color.

Melting Point: 521-657°C/970-1215°F

10. STABILITY AND REACTIVITY

General: These products are only intended for normal welding purposes.

Stability: These products are stable under normal conditions.

Reactivity: Contact with chemical substances like acids or strong bases could cause generation of gas.

When these products are used in a welding process, hazardous decomposition products would include those from the volatilization, reaction or oxidation of the materials listed in Section 3 and those from the base metal and coating.

The amount of fumes generated from these products varies with welding parameters and dimensions but is generally no more than 1 to 60 g/kg consumable. Fumes from these products may contain compounds of the following chemical elements: Fe, O, Mn, Cr, Si, Al, Mg, Cu, Ti, Zn, Zr and Be. The rest is not analyzed, according to available standards.

Refer to applicable national exposure limits for fume compounds, including those exposure limits for fume compounds found in Section 8. A significant amount of the chromium in the fumes can be hexavalent chromium, which has a very low exposure limit in some countries. Manganese also has a low exposure limit, in some countries, that may be easily exceeded.

Reasonably expected gaseous products would include carbon oxides, nitrogen oxides and ozone. Air contaminants around the welding area can be affected by the welding process and influence the composition and quantity of fumes and gases produced.

11. TOXICOLOGICAL INFORMATION

Inhalation of welding fumes and gases can be dangerous to your health. Classification of welding fumes is difficult because of varying base materials, coatings, air contamination and processes. The International Agency for Research on Cancer has classified welding fumes as possibly carcinogenic to humans (Group 2B).

Acute toxicity: Overexposure to welding fumes may result in symptoms like metal fume fever, dizziness, nausea, dryness or irritation of the nose, throat or eyes.

Chronic toxicity: Overexposure to welding fumes may affect pulmonary function. Prolonged inhalation of chromium compounds above safe exposure limits can cause cancer. Overexposure to manganese and manganese compounds above safe exposure limits can cause irreversible damage to the central nervous system, including the brain, symptoms of which may include slurred speech, lethargy, tremor, muscular weakness, psychological disturbances and spastic gait.

12. ECOLOGICAL INFORMATION

Welding consumables and materials could degrade/weather into components originating from the consumables or from the materials used in the welding process. Avoid exposure to conditions that could lead to accumulation in soils or groundwater.

13. DISPOSAL CONSIDERATIONS

Discard any product, residue, disposable container or liner in an environmentally acceptable manner, in full compliance with federal and local regulations. Use recycling procedures if available.

USA RCRA: Unused products or product residue containing chromium is considered hazardous waste if discarded, RCRA ID characteristic Toxic Hazardous Waste D007.

Residues from welding consumables and processes could degrade and accumulate in soils and groundwater.

14. TRANSPORT INFORMATION

No international regulations or restrictions are applicable.

15. REGULATORY INFORMATION

Read and understand the manufacturer's instructions, your employer's safety practices and the health and safety instructions on the label. Observe any federal and local regulations. Take precautions when welding and protect yourself and others.

WARNING: Welding fumes and gases are hazardous to your health and may damage lungs and other organs. Use adequate ventilation.

ELECTRIC SHOCK can kill.

ARC RAYS and SPARKS can injure eyes and burn skin.

Wear correct hand, head, eye and body protection.

Canada: WHMIS classification: Class D; Division 2, Subdivision A

Canadian Environmental Protection Act (CEPA): All constituents of these products are on the Domestic Substance List (DSL).

USA: Under the OSHA Hazard Communication Standard, these products are considered hazardous.

These products contain or produce a chemical known to the state of California to cause cancer and birth defects (or other reproductive harm). (California Health & Safety Code § 25249.5 et seq.)

United States EPA Toxic Substance Control Act: All constituents of these products are on the TSCA inventory list or are excluded from listing.

CERCLA/SARA Title III

Reportable Quantities (RQs) and/or Threshold Planning Quantities (TPQs):

Ingredient name	RQ (lb)	TPQ (lb)
Product is a solid solution in the form of a solid article.	--	--

Spills or releases resulting in the loss of any ingredient at or above its RQ require immediate notification to the National Response Center and to your Local Emergency Planning Committee.

Section 311 Hazard Class

As shipped: Immediate In use: Immediate delayed

EPCRA/SARA Title III 313 Toxic Chemicals

The following metallic components are listed as SARA 313 "Toxic Chemicals" and potential subject to annual SARA 313 reporting. See Section 3 for weight percent.

Ingredient name	Disclosure threshold
Aluminum (fume or dust)	1.0% de minimis concentration
Chromium	1.0% de minimis concentration
Copper	1.0% de minimis concentration
Manganese	1.0% de minimis concentration
Zinc (fume or dust)	1.0% de minimis concentraton

16. OTHER INFORMATION

This Safety Data Sheet has been revised due to modifications to Section 8. This SDS supersedes 7958-AB.

Refer to ESAB "Welding and Cutting - Risks and Measures", F52-529 "Precautions and Safe Practices for Electric Welding and Cutting" and F2035 "Precautions and Safe Practices for Gas Welding, Cutting and Heating" available from ESAB, and to:

USA: Contact ESAB at www.esabna.com or 1-800-ESAB-123 if you have questions about this SDS.

American National Standard Z49.1 "Safety in Welding and Cutting", ANSI/AWS F1.5 "Methods for Sampling and Analyzing Gases from Welding and Allied Processes", ANSI/AWS F1.1 "Method for Sampling Airborne Particles Generated by Welding and Allied Processes", AWSF3.2M/F3.2 "Ventilation Guide for Weld Fume", American Welding Society, 550 North Le Jeune Road, Miami, Florida, 33135. Safety and Health Fact Sheets available from AWS at www.aws.org.

OSHA Publication 2206 (29 C.F.R. 1910), U.S. Government Printing Office, Superintendent of Documents, P.O. Box 371954, Pittsburgh, PA 15250-7954.

American Conference of Governmental Hygienists (ACGIH), Threshold Limit Values and Biological Exposure Indices, 6500 Glenway Ave., Cincinnati, Ohio 45211, USA.

NFPA 51B "Standard for Fire Prevention During Welding, Cutting and Other Hot Work" published by the National Fire Protection Association, 1 Batterymarch Park, Quincy, MA 02169.

UK: WMA Publication 236 and 237, "Hazards from Welding Fume", "The arc welder at work, some general aspects of health and safety".

Germany: Unfallverhütungsvorschrift BGV D1, "Schweißen, Schneiden und verwandte Verfahren".

Canada: CSA Standard CAN/CSA-W117.2-01 "Safety in Welding, Cutting and Allied Processes".

These products have been classified according to the hazard criteria of the CPR and the SDS contains all the information required by the CPR.

Explanation of risk phrases mentioned in this SDS:

R-phrases:

R10 – Flammable.

R15 – Contact with water liberates extremely flammable gases.

R17 – Spontaneously flammable in air.

R25 – Toxic if swallowed.

R26 – Very toxic by inhalation.

R36/37/38 – Irritating to eyes, respiratory system and skin.

R48/23 – Toxic; danger of serious damage to health by prolonged exposure through inhalation.

R49 – May cause cancer by inhalation.

R50 – Very toxic to aquatic organisms.

R53 – May cause long-term adverse effects in the aquatic environment.

ESAB requests the users of these products to study this Safety Data Sheet (SDS) and become aware of product hazards and safety information. To promote safe use of these products a user should:

- notify its employees, agents and contractors of the information on this SDS and any product hazards/safety information.
- furnish this same information to each of its customers for these products.
- request such customers to notify employees and customers for the same product hazards and safety information.

The information herein is given in good faith and based on technical data that ESAB believes to be reliable. Since the conditions of use are outside our control, we assume no liability in connection with any use of this information and no warranty, expressed or implied is given. Contact ESAB for more information.

MATERIAL SAFETY DATA SHEET

This Material Safety Data Sheet (MSDS) is for U.S. manufactured or distributed welding consumables and related products and may be used to comply with OSHA's Hazard Communication standard, 29 CFR 1910.1200, and Superfund Amendments and Reauthorization Act (SARA) of 1986 Public Law 99-499. The OSHA standard must be consulted for specific requirements. This Safety Data Sheet complies with European Commission Directive 89/106/EEC, 91/155/EEC, ISO 11014-1 and ANSI Z400.1. This document is translated in several languages and available on our website at www.hobartbrothers.com, from your sales representative or by calling customer service at 1 (937) 332-4000.

SECTION 1 – IDENTIFICATION

Manufacturer/Supplier Name: HOBART BROTHERS COMPANY
Address: 101 TRADE SQUARE EAST, TROY, OH 45373
Website: www.hobartbrothers.com

Telephone No: +1 (937) 332-4000
Emergency No: +1 (800) 424-9300

Includes Wires:
Premier Arc 6 and Quantum Arc D2

Product Type: GAS METAL ARC WELDING (GMAW) SOLID WIRE
AWS Specification: ER70S-2, ER70S-3, ER70S-6, AND ER80S-D2

SECTION 2 – IDENTIFICATION OF HAZARDS

IMPORTANT - This section covers the hazardous materials from which this product is manufactured. The fumes and gases produced during welding with normal use of this product are also addressed in Section 8. The term "hazardous" in this section should be interpreted as a term required and defined in OSHA Hazard Communication Standard (29 CFR Part 1910.1200).

HAZARDOUS INGREDIENT	CAS	EINECS[Γ]	REGULATORY HAZARD CLASSIFICATION/DESIGNATION 67/548/EEC[Δ]	IARC[E]	NTP[Z]	OSHA[H]	65[Θ]
COPPER	7440-50-8	231-159-6	None	---	---	---	---
IRON	7439-89-6	231-096-4	None	---	---	---	---
MANGANESE	7439-96-5	231-105-1	Xn - R20/22[Y]	---	---	---	---
MOLYBDENUM	7439-98-7	231-107-2	Xn - R48/20/22; Xi - R36/37[X]	---	---	---	---
SILICON	7440-21-3	231-130-8	None	---	---	---	---
(Amorphous Silica Fume)	69012-64-2	273-761-5	None	3	K	---	X

Γ – **E**uropean **IN**ventory of **E**xisting **C**hemical **S**ubstances Number Δ - European Union Directive 67/548/EEC – Annex 1 E – International Agency for Research on Cancer (1 – Human Carcinogen, 2A – Probably Carcinogenic to Humans, 2B – Possibly Carcinogenic to Humans, 3 – Unclassifiable as to Carcinogenicity in Humans, 4 Probably Not Carcinogenic to Humans) Z – US National Toxicology Program (K – Known Carcinogen, S – Suspected Carcinogen) H – OSHA Known Carcinogen List Θ – California Proposition 65 (X – On Proposition 65 list) --- Dashes indicate the ingredient is not listed with the IARC, NTP, OSHA or 65 Φ – **Carc**inogen, **Muta**gen or **Repr**oductive Category per European Council Directive 67/548/EEC Annex I Y – Manganese Dioxide EU 67/548/EEC Classification/Designation X – Molybdenum Trioxide EU 67/548/EEC Classification/Designation

The following symbols correspond with the EU 67/548/EEC column above are in European Union Directive 67/548/EEC Annex 1 and EC 1272/2008 Annex VI – Table 3.2:

Xn – Harmful

Xi – Irritant

WARNING! - Avoid breathing welding fumes and gases, they may be dangerous to your health. Always use adequate ventilation. Always use appropriate personal protective equipment.

PRIMARY ROUTES OF ENTRY: Respiratory System, Eyes and/or Skin.
ELECTRIC SHOCK: Arc welding and associated processes can kill. See Section 8.
ARC RAYS: The welding arc can injure eyes and burn skin.
FUMES AND GASES: Can be dangerous to your health.

Welding fumes and gases cannot be classified simply. The composition and quantity of both are dependent upon the metal being welded, the process, procedures and electrodes used. Most fume ingredients are present as complex oxides and compounds and not as pure metals. When the electrode is consumed, the fume and gas decomposition products generated are different in percent and form from the ingredients listed in Section 3. Decomposition products of normal operation include those originating from the volatilization, reaction or oxidation of the materials shown in this section, plus those from the base metal and coating, etc., as noted above. Monitor for the materials identified in the list within this section.
Fumes from the use of this product may contain complex oxides or compounds of the following elements and molecules: amorphous silica fume, copper and manganese. Other reasonably expected constituents of the fume would also include complex oxides of iron and molybdenum. Gaseous reaction products may include carbon monoxide and carbon dioxide. Ozone and nitrogen oxides may be formed by the radiation from the arc. Other conditions which also influence the composition and quantity of the fumes and gases to which workers may be exposed include: coatings on the metal being welded (such as paint, plating or galvanizing), the number of welders and the volume of the work area, the quality and amount of ventilation, the position of the welder's head with respect to the fume plume, as well as the presence of contaminants in the atmosphere (such as chlorinated hydrocarbon vapors from cleaning and degreasing activities). One recommended way to determine the composition and quantity of fumes and gases to which workers are exposed is to take an air sample inside the welder's helmet if worn or in the worker's breathing zone. See ANSI/AWS F1.1, available from the "American Welding Society", P.O. Box 351040, Miami, FL 33135. Also, from AWS is F1.3 "Evaluating Contaminants in the Welding Environment - A Sampling Strategy Guide", which gives additional advice on sampling.

SECTION 3 – HAZARDOUS INGREDIENTS

INGREDIENT	CAS	EINECS	%WEIGHT	INGREDIENT	CAS	EINECS	%WEIGHT
COPPER (1)	7440-50-8	231-159-6	0.1-5	MOLYBDENUM (2)	7439-98-7	231-107-2	0.1-1
IRON	7439-89-6	231-096-4	80-90	SILICON	7440-21-3	231-130-8	0.1-5
MANGANESE	7439-96-5	231-105-1	0.1-10	(Amorphous Silica Fume)	69012-64-2	273-761-5	

(1) - Copper, if contained in the product, is clearly visible and only present as a surface coating. (2) – Present only in ER80S-D2. --- Dashes indicate the ingredient is not present within the group of products

SECTION 4 – FIRST AID MEASURES

INHALATION: If breathing is difficult provide fresh air and contact physician.
EYE/SKIN INJURIES: For radiation burns, see physician.
Section 11 of this MSDS covers the acute effects of overexposure to the various ingredients within the welding consumable. Section 8 of this MSDS lists the exposure limits and covers methods for protecting yourself and your co-workers.

SECTION 5 - FIRE AND EXPLOSION HAZARD DATA

Welding consumables applicable to this sheet as shipped are nonreactive, nonflammable, nonexplosive and essentially nonhazardous until welded. Welding arcs and sparks can ignite combustibles and flammable products. Unused welding consumables may remain hot for a period of time after completion of a welding process. See American National Standard (ANSI) Z49.1 for further general safety information on the use and handling of welding consumables and associated procedures.

SECTION 6 - ACCIDENTAL RELEASE MEASURES

Solid objects can be picked up and placed into a container. Wear proper personal protective equipment while handling. Do not discard as general trash.

MATERIAL SAFETY DATA SHEET

SECTION 7 - HANDLING AND STORAGE

HANDLING: No specific requirements in the form supplied. Handle with care to avoid cuts. Wear gloves when handling welding consumables. Avoid exposure to dust. Do not ingest. Some individuals can develop an allergic reaction to certain materials. Retain all warning and product labels.
STORAGE: Keep separate from acids and strong bases to prevent possible chemical reactions.

SECTION 8 - EXPOSURE CONTROL AND PERSONAL PROTECTION

Read and understand the instructions and the labels on the packaging. Welding fumes do not have a specific OSHA PEL or ACGIH TLV. The OSHA PEL for Particulate – Not Otherwise Classified (PNOC) is 5 mg/m^3 – Respirable Fraction, 15 mg/m^3 – Total Dust. The ACGIH TLV for Particles – Not Otherwise Specified (PNOS) is 3 mg/m^3 – Respirable Particles, 10 mg/m^3 – Inhalable Particles. The individual complex compounds within the fume may have a lower OSHA PEL or ACGIH TLV than the OSHA Particulate – Not Otherwise Classified (PNOC) and ACGIH Particles – Not Otherwise Specified (PNOS). An Industrial Hygienist, the OSHA Permissible Exposure Limits for Air Contaminants (29 CFR 1910.1000), and the ACGIH Threshold Limit Values should be consulted to determine the specific fume constituents present and their respective exposure limits. European Union Occupational Exposure Limits (EU OEL) are listed with the most stringent limit among the EU member nations. All exposure limits are in milligrams per cubic meter (mg/m^3).

INGREDIENT	CAS	EINECS	OSHA PEL	ACGIH TLV	EU OEL
COPPER	7440-50-8	231-159-6	0.1 (Fume), 1 (Dust)	0.2 (Fume), 1 (Dust)	0.1 I* (Aerosol); 0.2 I*** (Aerosol) - Germany 0.1; 0.2*** - Denmark
IRON+	7439-89-6	231-096-4	5 R*	5 R* (Fe_2O_3) {A4}	3 R* (Aerosol as Fe_2O_3) – Switzerland 7*** (as Fe_2O_3) - Denmark
MANGANESE#	7439-96-5	231-105-1	5 CL** (Fume) 1, 3 STEL*** ■	0.1 I* {A4}♦ 0.02 R*, ♦♦	0.02 R*(Aerosol); 0.16 R*** (Aerosol) - Germany 0.2 I*(Aerosol) - Germany 0.2; 0.4*** - Denmark
MOLYBDENUM	7439-98-7	231-107-2	5 R*	3 R*; 10 I* (Ele and Insol) 0.5 R* (Sol Cpnds) {A3}	3 R* - Spain; 4; 10*** - Poland
SILICON+	7440-21-3	231-130-8	5 R*	3 R*	4 R* (Aerosol); 10 I* (Aerosol) - Denmark
(Amorphous Silica Fume)	69012-64-2	273-761-5	0.8	3 R*	2 I*; 4 I*** - Denmark

R* - Respirable Fraction R*** - Respirable Fraction - Short Term Exposure Limit I* - Inhalable Fraction I*** - Inhalable Fraction - Short Term Exposure Limit ** - Ceiling Limit *** - Short Term Exposure Limit + - As a nuisance particulate covered under "Particulates Not Otherwise Regulated" by OSHA or "Particulates Not Otherwise Classified" by ACGIH ■ - NIOSH REL TWA and STEL ♦ - Limit of 0.1 mg/m^3 is for Inhalable Mn in 2013 by ACGIH ♦♦ - Limit of 0.02 mg/m^3 is for Respirable Mn in 2013 by ACGIH Ele – Element Sol – Soluble Insol – Insoluble Inorg – Inorganic Cpnds – Compounds NOS – Not Otherwise Specified {A3} - Confirmed Animal Carcinogen with Unknown Relevance to Humans per ACGIH {A4} - Not Classifiable as a Human Carcinogen per ACGIH

VENTILATION: Use enough ventilation, local exhaust at the arc or both to keep the fumes and gases below the PEL/TLV/OELs in the worker's breathing zone and the general area. Train the welder to keep his head out of the fumes.
RESPIRATORY PROTECTION: Use NIOSH approved or equivalent fume respirator or air supplied respirator when welding in confined space or where local exhaust or ventilation does not keep exposure below the regulatory limits.
EYE PROTECTION: Wear helmet or use face shield with filter lens. As a rule of thumb begin with Shade Number 14. Adjust if needed by selecting the next lighter and/or darker shade number. Provide protective screens and flash goggles, if necessary, to shield others from the weld arc flash.
PROTECTIVE CLOTHING: Wear hand, head and body protection which help to prevent injury from radiation, sparks and electrical shock. See ANSI Z49.1. At a minimum this includes welder's gloves and a protective face shield, and may include arm protectors, aprons, hats, shoulder protection as well as dark nonsynthetic clothing. Train the welder not to touch live electrical parts and to insulate himself from work and ground.
PROCEDURE FOR CLEANUP OF SPILLS OR LEAKS: Not applicable
SPECIAL PRECAUTIONS (IMPORTANT): Maintain exposure below the PEL/TLV/OEL. Use industrial hygiene monitoring to ensure that your use of this material does not create exposures which exceed PEL/TLV/OEL. Always use exhaust ventilation. Refer to the following sources for important additional information: American National Standard (ANSI) Z49.1; Safety in Welding and Cutting published by the American Welding Society, P.O. Box 351040, Miami, FL 33135 and OSHA Publication 2206 (29 CFR 1910), U.S. Government Printing Office, Washington, DC 20402.

SECTION 9 – PHYSICAL AND CHEMCIAL PROPERTIES

Welding consumables applicable to this sheet as shipped are nonreactive, nonflammable, nonexplosive and essentially nonhazardous until welded.
PHYSICAL STATE: Cored Wire
COLOR: Gray or Copper (shiny metallic)
ODOR: N/A
FORM: Round Wire

SECTION 10 – STABILITY AND REACTIVITY

GENERAL: Welding consumables applicable to this sheet are solid and nonvolatile as shipped. This product is only intended for use per the welding parameters it was designed for. When this product is used for welding, hazardous fumes may be created. Other factors to consider include the base metal, base metal preparation and base metal coatings. All of these factors can contribute to the fume and gases generated during welding. The amount of fume varies with the welding parameters.
STABILITY: This product is stable under normal conditions.
REACTIVITY: Contact with acids or strong bases may cause generation of gas.

SECTION 11 – TOXICOLOGICAL INFORMATION

SHORT-TERM (ACUTE) OVEREXPOSURE EFFECTS: Welding Fumes - May result in discomfort such as dizziness, nausea or dryness or irritation of nose, throat or eyes. **Copper** - Metal fume fever characterized by metallic taste, tightness of chest and fever. Symptoms may last 24 to 48 hours following overexposure. **Iron, Iron Oxide** - None are known. Treat as nuisance dust or fume. **Manganese** - Metal fume fever characterized by chills, fever, upset stomach, vomiting, irritation of the throat and aching of body. Recovery is generally complete within 48 hours of the overexposure. **Molybdenum** - Irritation of the eyes, nose and throat. **Silica (Amorphous)** - Dust and fumes may cause irritation of the respiratory system, skin and eyes.
LONG-TERM (CHRONIC) OVEREXPOSURE EFFECTS: Welding Fumes - Excess levels may cause bronchial asthma, lung fibrosis, pneumoconiosis or "siderosis." **Copper** - Copper poisoning has been reported in the literature from exposure to high levels of copper. Liver damage can occur due to copper accumulating in the liver characterized by cell destruction and cirrhosis. High levels of copper may cause anemia and jaundice. High levels of copper may cause central nervous system damage characterized by nerve fiber separation and cerebral degeneration. **Iron, Iron Oxide Fumes** - Can cause siderosis (deposits of iron in lungs) which some researchers believe may affect pulmonary function. Lungs will clear in time when exposure to iron and its compounds ceases. Iron and magnetite (Fe_3O_4) are not regarded as fibrogenic materials. **Manganese** - Long-term overexposure to manganese compounds may affect the central nervous system. Symptoms may be similar to Parkinson's disease and can include slowness, changes in handwriting, gait impairment, muscle spasms and cramps and less commonly, tremor and behavioral changes. Employees who are overexposed to manganese compounds should be seen by a physician for early detection of neurologic problems. Overexposure to manganese and manganese compounds above safe exposure limits can cause irreversible damage to the central nervous system, including the brain, symptoms of which may include slurred speech, lethargy, tremor, muscular weakness, psychological disturbances and spastic gait. **Molybdenum** - Prolonged overexposure may result in loss of appetite, weight loss, loss of muscle coordination, difficulty in breathing and anemia. **Silica (Amorphous)** - Research indicates that silica is present in welding fume in the amorphous form. Long term overexposure may cause pneumoconiosis. Noncrystalline forms of silica (amorphous silica) are considered to have little fibrotic potential.
MEDICAL CONDITIONS AGGRAVATED BY EXPOSURE: Persons with pre-existing impaired lung functions (asthma-like conditions). Persons with a pacemaker should not go near welding and cutting operations until they have consulted their doctor and obtained information from the manufacturer of the device. Respirators are to be worn only after being medically cleared by your company-designated physician.
EMERGENCY AND FIRST AID PROCEDURES: Call for medical aid. Employ first aid techniques recommended by the American Red Cross. If irritation or flash burns develop after exposure, consult a physician.
CARCINOGENICITY: Welding fumes must be considered as carcinogens under OSHA (29 CFR 1910.1200) & the ICRC (International Centre of Research on Cancer).

CALIFORNIA PROPOSITION 65: WARNING: These products contain or produce a chemical known to the State of California to cause cancer and birth defects (or other reproductive harm). (California Health & Safety Code Section 25249.5 et seq.)

SECTION 12 – ECOLOGICAL INFORMATION

Welding processes can release fumes directly to the environment. Welding wire can degrade if left outside and unprotected. Residues from welding consumables and processes could degrade and accumulate in the soil and groundwater.

SECTION 13 – DISPOSAL CONSIDERATIONS

Use recycling procedures if available. Discard any product, residue, packaging, disposable container or liner in an environmentally acceptable manner, in full compliance with international, federal, state and local regulations. EU – Industrial Waste Codes – 120113 Welding Waste, 120101 Ferrous Metallic Scraps, 120103 Non-Ferrous Metallic Scraps.

SECTION 14 – TRANSPORT INFORMATION

No international regulations or restrictions are applicable. No special precautions are necessary.

SECTION 15 – REGULATORY INFORMATION

Read and understand the manufacturer's instructions, your employer's safety practices and the health and safety instructions on the label and the material safety data sheet. Observe all local and federal rules and regulations. Take all necessary precautions to protect yourself and others.

United States EPA Toxic Substance Control Act: All constituents of these products are on the TSCA inventory list or are excluded from listing.

CERCLA/SARA TITLE III: Reportable Quantities (RQs) and/or Threshold Planning Quantities (TPQs):

Ingredient name	**RQ(lb)**	**TPQ (lb)**
Products on this MSDS are a solid solution in the form of a solid article.	--	--

Spills or releases resulting in the loss of any ingredient at or above its RQ require immediate notification to the National Response Center and to your Local Emergency Planning Committee.

Section 311 Hazard Class
As shipped: Immediate In use: Immediate delayed

EPCRA/SARA TITLE III 313 TOXIC CHEMICALS: The following metallic components are listed as SARA 313 "Toxic Chemicals" and potentially subject to annual SARA 312 reporting: Manganese. See Section 3 for weight percentage.

CANADIAN WHMIS CLASSIFICATION: Class D; Division 2, Subdivision A

CANADIAN ENVIRONMENTAL PROTECTION ACT (CEPA): All constituents of these products are on the Domestic Substance List (DSL).

SECTION 16 – OTHER INFORMATION

The following Risk and Safety Phrase Texts and Hazard Statements correspond with the columns labeled - EU 67/548/EEC within Section 2 of this material safety data sheet. Take appropriate precautions and protective measures to eliminate or limit the associated hazard.

EU Directive 67/548/EEC - Risk Phrase Texts
R20/22 – Harmful by inhalation and if swallowed
R36/37 – Irritating to eyes and respiratory system
R48/20/22 – Harmful: danger of serious damage to health by prolonged exposure through inhalation and if swallowed

For additional information please refer to the following sources:

USA: **American National Standard (ANSI) Z49.1** "Safety in Welding and Cutting", **ANSI/American Welding Society (AWS) F1.5** "Methods for Sampling and Analyzing Gases from Welding and Allied Processes", **ANSI/AWS F1.1** "Method for Sampling Airborne Particles Generated by Welding and Allied Processes", **AWSF3.2M/F3.2** "Ventilation Guide for Weld Fume", American Welding Society, 550 North Le Jeune Road, Miami, Florida, 33135. Safety and Health Fact Sheets available from AWS at www.aws.org. **OSHA Publication 2206 (29 C.F.R. 1910),** U.S. Government Printing Office, Superintendent of Documents, P.O. Box 371954, Pittsburgh, PA 15250-7954. **Threshold Limit Values and Biological Exposure Indices**, American Conference of Governmental Hygienists (ACGIH), 6500 Glenway Ave., Cincinnati, Ohio 45211, USA. **NFPA 51B** "Standard for Fire Prevention During Welding, Cutting and Other Hot Work" published by the National Fire Protection Association, 1 Batterymarch Park, Quincy, MA 02169.

UK: **WMA Publication 236 and 237**, "Hazards from Welding Fume", "The arc welder at work, some general aspects of health and safety".

Canada: **CSA Standard CAN/CSA-W117.2-01** "Safety in Welding, Cutting and Allied Processes".

Hobart Brothers Company strongly recommends the users of this product study this MSDS, the product label information and become aware of all hazards associated with welding. Hobart Brothers Company believes this data to be accurate and to reflect qualified expert opinion regarding current research. However, Hobart Brothers Company cannot make any expressed or implied warranty as to this information.

MATERIAL SAFETY DATA SHEET

Prepared to U.S. OSHA, CMA, ANSI and Canadian WHMIS Standards .This Material Safety Data Sheet is offered pursuant to OSHA's Hazard Communication Standard (29 CFR 1910.1200). Other government regulations must be reviewed for applicability to these products.

WARNING: PRODUCT COMPONENTS PRESENT HEALTH AND SAFETY HAZARDS. READ AND UNDERSTAND THIS MATERIAL SAFETY DATA SHEET (M.S.DS.). ALSO, FOLLOW YOUR EMPLOYER'S SAFETY PRACTICES. This product may contain Chromium and/or Nickel which are listed by OSHA, NTP, or IARC as being a carcinogen or potential carcinogen. Use of this product may expose you or others to fumes and gases at levels exceeding those established by the American Conference of Governmental Industrial Hygienists (ACGIH) or the Occupational Safety and Health Administration (OSHA) The information contained herein relates only to the specific product. If the product is combined with other materials, all component properties must be considered. **BE SURE TO CONSULT THE LATEST VERSION OF THE MSDS. MATERIAL SAFETY DATA SHEETS ARE AVAILABLE FROM HARRIS PRODUCTS GROUP** 513-754-2000 **www.harrisproductsgroup.com**

STATEMENT OF LIABILITY-DISCLAIMER

To the best of the Harris Products Group knowledge, the information and recommendations contained in this publication are reliable and accurate as of the date prepared. However, accuracy, suitability, or completeness are not guaranteed, and no warranty, guarantee, or representation, expressed or implied, is made by Harris Products Group. as to the absolute correctness or sufficiency of any representation contained in this and other publications; Harris Products Group. assumes no responsibility in connection therewith; nor can it be assumed that all acceptable safety measures are contained in this and other publications, or that other or additional measures may not be required under particular or exceptional conditions or circumstances . Data may be changed from time to time.

PART I *What is the material and what do I need to know in an emergency?*

1. PRODUCT IDENTIFICATION

TRADE NAME (AS LABELED):	**Listed in Section 2 under Class**
CHEMICAL NAME/CLASS:	**STAINLESS STEEL WIRE OR RODS AND **SUPER MISSILEWELD TIG and 99T**
SYNONYMS:	Not Applicable
PRODUCT USE:	Metal Welding
DOCUMENT NUMBER:	0106
SUPPLIER/MANUFACTURER'S NAME:	**HARRIS PRODUCTS GROUP**
ADDRESS:	4501 Quality Place Mason, Ohio 45040
EMERGENCY PHONE:	CHEMTREC: 1-800-424-9300
BUSINESS PHONE:	513-754-2000 **FAX** 513-754-8778
DATE OF PREPARATION:	November 24, 2010

2. COMPOSITION and INFORMATION ON INGREDIENTS

Class	C	Cr	Ni	Mo	Mn	Si	Cu	Fe
99T	-	-	Balance	-	0.50	-	-	-
3SMW **	0.20	35.00	25.00	3.00	2.50	1.00	(c)	Balance
ER308	0.08	19.5-22.0	9.0-11.0	0.75	1.0-2.5	0.30-0.65	0.75	Balance
ER308H	0.06	19.5	10.0	-	0.70-1.0	0.70	0.75	Balance
ER308L	0.03	19.5-22.0	9.0-11.0	0.75	1.0-2.5	0.30-0.65	0.75	Balance
ER308LSi	0.03	19.5-22.0	9.0-11.0	0.75	1.0-2.5	0.65-1.00	0.75	Balance
ER309	0.12	23.0-25.0	12.0-14.0	0.75	1.0-2.5	0.30-0.65	0.75	Balance
ER309L	0.03	23.0-25.0	12.0-14.0	0.75	1.0-2.5	0.30-0.65	0.75	Balance
ER309LSi	0.03	23.0-25.0	12.0-14.0	0.75	1.0-2.5	0.65-1.00	0.75	Balance
ER310	0.08-0.15	25.0-28.0	20.0-22.5	0.75	1.0-2.5	0.30-0.65	0.75	Balance
ER312	0.12	28.0-32.0	8.0-10.5	0.75	1.0-2.5	0.30-0.65	0.75	Balance
ER316	0.08	18.0-20.0	11.0-14.0	2.0-3.0	1.0-2.5	0.30-0.65	0.75	Balance
ER316H	0.08	18.0-20.0	11.0-14.0	2.0-3.0	0.05-2.0	0.50-1.0	0.75	Balance
ER316L	0.03	18.0-20.0	11.0-14.0	2.0-3.0	1.0-2.5	0.30-0.65	0.75	Balance
ER316LSi	0.03	18.0-20.0	11.0-14.0	2.0-3.0	1.0-2.5	0.65-1.00	0.75	Balance
ER317L	0.03	18.5-20.5	13.0-15.0	3.0-4.0	1.0-2.5	0.30-0.65	0.75	Balance
ER330	0.03	15.0-20.0	32.0-37.0	-	1.5-3.0	0.25-0.50	0.75	Balance

ER347 (a)	0.08	19.0-21.5	9.0-11.0	0.75	1.0-2.0	0.30-0.65	0.75	Balance
ER410	0.12	11.5-13.5	0.6	0.75	0.6	0.5	0.75	Balance
ER420	0.25 – 0.40	12.0 – 14.0	0.60	0.75	0.60	0.50	0.75	Balance
ER630 (b)	0.05	16.0-16.75	4.5-5.0	0.75	0.25-0.75	0.75	3.25-4.00	Balance
Single values are maximums, P and S =0.30% max. each , a: Cb(Nb)+Ta = 10XC min./1.0 max. , b= Cb(Nb)+Ta 0.15-0.30 c = Ti, Ta & Cb = 1.50 max each								

2. COMPOSITION and INFORMATION ON INGREDIENTS (Continued)

CHEMICAL NAME	CAS #	EXPOSURE LIMITS IN AIR					
		ACGIH-TLV		OSHA-PEL		NIOSH	OTHER
		TWA mg/m^3	STEL mg/m^3	TWA mg/m^3	STEL mg/m^3	IDLH mg/m^3	mg/m^3
Iron (exposure limits are for iron oxide dust and	7439-89-6	5	NE	10	NE	2500	NIOSH REL: TWA = 5 DFG MAK: TWA = 1.5 (respirable fraction) Carcinogen: IARC-3, TLV-A4
Manganese (exposure limits are for Manganese, elemental, inorganic compounds, and fume, as Mn)	7439-96-5	0.2	NE	1 (vacated 1989 PEL)	5 (ceiling) 3 (vacated 1989 PEL)	500	NIOSH REL: TWA = 1 STEL = 3 DFG MAKs: TWA = 0.5 (inhalable fraction) PEAK = 10•MAK 30 min., average value Carcinogen: EPA-D
Silicon	7440-21-3	10	NE	15 (Total dust) 5 (Respirable fraction) 10 (Total dust) (vacated 1989 PEL)	NE	NE	NIOSH REL: TWA = 10 (total dust), 5 (respirable fraction)
Molybdenum	7439-98-7	10 NIC-10 (inhalable fraction) NIC-3 (respirable fraction)	NE	15 10 (vacated 1989 PEL)	NE	5000	DFG MAK: TWA = 4 (inhalable fraction)
Niobium	7440-03-1	NE	NE	NE	NE	NE	NE
Phosphorus	7723-14-0	0.1	NE	0.1	NE	5	NIOSH REL: TWA = 0.1 DFG MAK: TWA = 01 (respirable fraction) PEAK = 2•MAK, 5 min., momentary value DFG MAK Pregnancy Risk Classification: D Carcinogen: EPA-D
Sulfur	7704-34-9	NE	NE	NE	NE	NE	NE
Carbon (exposure limits are for Particles Not Otherwise Specified)	7440-44-0	10 (Inhalable) 3 (Respirable)	NE	50 mppcf or 15 (Total Dust) 15 mppcf or 5 (Respirable Fraction)	NE	NE	DFG MAKs: TWA = 4 (Inhalable fraction); 1.5 (Respirable Fraction)
Copper (exposure limits are for "Copper fume, as Cu")	7440-50-8	0.2 (fume) 1 (dusts & mists)	NE	0.1 (fume) 1 (dusts & mists)	NE	100	NIOSH REL: TWA = 0.1 DFG MAK: TWA = 0.1 (Inhalable Fraction) PEAK = 2•MAK 30 min., average value Carcinogen: EPA-D

NE = Not Established. mppcf = Millions of Particles Per Cubic Foot See Section 16 for Definitions of Terms Used.
NOTE (1): The ACGIH has an established exposure limit for Welding Fumes, Not Otherwise Classified. The Threshold Limit Value is 5 mg/m^3. NIOSH classifies welding fumes as carcinogens. Single values shown are maximum, unless otherwise noted.

NOTE (2): ALL WHMIS required information is included in appropriate sections based on the ANSI Z400.1-1998 format. These products have been classified in accordance with the hazard criteria of the CPR and the MSDS contains all the information required by the CPR.

2. COMPOSITION and INFORMATION ON INGREDIENTS (Continued)

CHEMICAL NAME	CAS #	EXPOSURE LIMITS IN AIR					
		ACGIH-TLV		OSHA-PEL		NIOSH	OTHER
		TWA mg/m^3	STEL mg/m^3	TWA mg/m^3	STEL mg/m^3	IDLH mg/m^3	mg/m^3
Chromium (Chromium, metal)	7440-47-3	0.5 0.5 (Cr. III)* 0.05 (Cr. VI,)*	NE	1.0 0.5 (Cr. III)* 5.0 ug/m³ (CrVI)	NE	250	NIOSH REL : TWA = 0.5 Carcinogen: EPA-D, EPA-CBD, IARC-3, TLV-A4 Cr.VI; IARC-1, TLV-A1
Nickel (exposure limits are for Nickel, elemental metal)	7440-02-0	1.5 (inhalable fraction)	NE	1	NE	10	NIOSH REL: TWA = 0.015 Carcinogen: IARC-2B, MAK-1, NIOSH-Ca, NTP-R, TLV-A5

NE = Not Established. See Section 16 for Definitions of Terms Used. * Compounds as Cr. & Cr. VI Water Soluble

NOTE (1): The ACGIH has an established exposure limit for Welding Fumes, Not Otherwise Classified. The Threshold Limit Value is 5 mg/m^3. NIOSH classifies welding fumes as carcinogens. Single values shown are maximum, unless otherwise noted.

NOTE (2): ALL WHMIS required information is included in appropriate sections based on the ANSI Z400.1-1998 format. These products have been classified in accordance with the hazard criteria of the CPR and the MSDS contains all the information required by the CPR.

3. HAZARD IDENTIFICATION

EMERGENCY OVERVIEW: These products consist of solid metal rods that are odorless. There are no immediate health hazards associated with these products. The Nickel and Chromium components of some of these products are suspect carcinogens. These products are not flammable nor reactive. If involved in a fire, these products may generate irritating iron fumes, a variety of iron compounds, carbon dioxide, carbon monoxide, and metal oxides. Emergency responders must wear personal protective equipment suitable for the situation to which they are responding.

SYMPTOMS OF OVER-EXPOSURE BY ROUTE OF EXPOSURE: During welding operations, the most significant route of over-exposure is via inhalation of fumes.

INHALATION: Inhalation is not anticipated to be a significant route of over-exposure to the coated rods. Inhalation of large amounts of particulates generated by this product during metal processing operations may result in pneumoconiosis (a disease of the lungs). Repeated over-exposures, via inhalation, to the dusts or fumes generated by this product during welding operations may have adverse effects on the lungs with possible pulmonary edema and emphysema (life-threatening lung injuries). Nickel (a component of some of these products) can cause pulmonary asthma in hypersensitive individuals. Damage to lungs can occur. Inhalation of dusts and fumes of Iron can also cause metal fume fever. Inhalation of copper oxide fumes, which may be generated by some of these products during welding operations, can cause metal fume fever and Chronic over-exposure to Copper dust may cause tiredness, stuffiness, diarrhea, and vomiting. Symptoms of metal fume fever can be delayed 24-48 hours. Refer to Section 10 (Stability and Reactivity) for information on the specific composition of welding fumes and gases.

HAZARDOUS MATERIAL IDENTIFICATION SYSTEM

HEALTH	(BLUE)	2
FLAMMABILITY	(RED)	0
REACTIVITY	(YELLOW)	0
PROTECTIVE EQUIPMENT		X

EYES	RESPIRATORY	HANDS	BODY
	See Section 8		See Section 8

For routine industrial applications for the rods

See Section 16 for Definition of Ratings

CONTACT WITH SKIN or EYES: Contact of the rod form of these products with the skin is not anticipated to be irritating. Contact with the rod form of these products can be physically damaging to the eye. Fumes generated during welding operations can be irritating to the skin and eyes. Contact with the hot rods will burn contaminated skin or eyes. Due to the presence of Nickel, prolonged exposure of the eyes may result in sensitization resulting in conjunctivitis (inflammation of the mucous membranes of the eyes). Symptoms of skin over-exposure may include irritation and redness; prolonged or repeated skin over-exposures may lead to allergic contact dermatitis. Contact with the hot electrodes or rods will burn contaminated skin or eyes.

3. HAZARD IDENTIFICATION (Continued)

SKIN ABSORPTION: Skin absorption is not anticipated to be a significant route of over-exposure to the components of these products.

INGESTION: Ingestion is not anticipated to be a route of occupational exposure for these products.

INJECTION: Though not a likely route of occupational exposure for these products, injection (via punctures or lacerations in the skin) may cause local reddening, tissue swelling, and discomfort.

HEALTH EFFECTS OR RISKS FROM EXPOSURE: An Explanation in Lay Terms. Symptoms associated with over-exposure to these products and the fumes generated during welding operations are as follows:

ACUTE: The chief acute health hazard associated with these products would be the potential for irritation of contaminated skin and eyes when exposed to fumes during welding operations. Inhalation of large amounts of particulates generated by these products during metal processing operations can result in pneumoconiosis (a disease of the lungs). Inhalation of copper oxide fumes can cause metal fume fever. Rare cases of allergic contact dermatitis have been reported in people working with copper dust. Severe ingestion over-exposure to Copper (a component of some of these products) may be fatal. In extreme cases, burns may occur from contact that are generated during thermal decomposition. Contact with the molten material will burn contaminated skin or eyes.

CHRONIC: Chronic skin over-exposure to the fumes generated during welding operations may produce dermatitis (red, inflamed skin). Repeated over-exposures to the fumes generated by these products via inhalation can have adverse effects on the lungs (e.g., pulmonary edema and emphysema). Repeated or prolonged ingestion exposures to > 50–100 mg of Iron per day can result in deposition of iron in the body tissues, which can cause disease. Hypersensitivity to Nickel is common and can cause allergic contact dermatitis, pulmonary asthma, conjunctivitis and inflammatory reactions. Chronic over-exposure to Copper dust may cause tiredness, stuffiness, diarrhea, vomiting, discoloration of the skin and eyes, and kidney and liver disorder. Repeated over-exposures to the fumes generated by these products via inhalation can have adverse effects on the lungs (e.g., pulmonary edema and emphysema). Refer to Section 11 (Toxicological Information) for further information.

TARGET ORGANS: For fumes: ACUTE: Skin, eyes, respiratory system. CHRONIC: Skin, respiratory system, pancreas and liver.

PART II *What should I do if a hazardous situation occurs?*

4. FIRST-AID MEASURES

Victims of chemical exposure must be taken for medical attention. Rescuers should be taken for medical attention, if necessary. Take a copy of label and MSDS to health professional with victim.

SKIN EXPOSURE: If fumes generated by welding operations involving these products contaminate the skin, begin decontamination with running water. If molten material contaminates the skin, immediately begin decontamination with cold, running water. Minimum flushing is for 15 minutes. Victim must seek medical attention if any adverse reaction occurs.

EYE EXPOSURE: If fumes generated by welding operations involving these products enter the eyes, open victim's eyes while under gently running water. Use sufficient force to open eyelids. Have victim "roll" eyes. Minimum flushing is for 15 minutes. Victim must seek immediate medical attention.

INHALATION: If fumes generated by welding operations involving these products are inhaled, remove victim to fresh air. If necessary, use artificial respiration to support vital functions.

INGESTION: If swallowed call physician immediately! Do not induce vomiting unless directed by medical personnel. Rinse mouth with water if person is conscious. Never give fluids or induce vomiting if person is unconscious, having convulsions, or not breathing.

MEDICAL CONDITIONS AGGRAVATED BY EXPOSURE: Skin, respiratory, pancreas, and liver disorders may be aggravated by prolonged over-exposures to the dusts or fumes generated by these products.

RECOMMENDATIONS TO PHYSICIANS: Treat symptoms and eliminate overexposure.

5. FIRE-FIGHTING MEASURES (Continued)

FLASH POINT: Not flammable.

NFPA RATING

AUTOIGNITION TEMPERATURE: Not flammable.
FLAMMABLE LIMITS (in air by volume, %):

Lower (LEL): Not applicable.
Upper (UEL): Not applicable.

FIRE EXTINGUISHING MATERIALS: These products are not flammable; use fire-extinguishing agents appropriate for surrounding materials.

Water Spray: YES
Halon: YES
Dry Chemical: YES
Carbon Dioxide: YES
Foam: YES
Other: Any "ABC" Class

UNUSUAL FIRE AND EXPLOSION HAZARDS When involved in a fire, these products may decompose and produce iron fumes, a variety of nickel, iron , copper and a variety of metal compounds and metal oxides. The hot material can present a significant thermal hazard to firefighters.

Explosion Sensitivity to Mechanical Impact: Not sensitive.
Explosion Sensitivity to Static Discharge: Not sensitive.

SPECIAL FIRE-FIGHTING PROCEDURES: Not applicable.

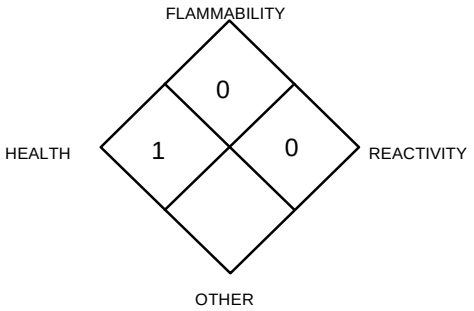

See Section 16 for Definition of Ratings

6. ACCIDENTAL RELEASE MEASURES

SPILL AND LEAK RESPONSE: Not applicable.

PART III *How can I prevent hazardous situations from occurring*

7. HANDLING and STORAGE

WORK PRACTICES AND HYGIENE PRACTICES: As with all chemicals, avoid getting these products ON YOU or IN YOU. Wash thoroughly after handling these products. Do not eat or drink while handling these products. Use ventilation and other engineering controls to minimize potential exposure to these products.

STORAGE AND HANDLING PRACTICES: All employees who handle these products should be trained to handle it safely. Use in a well-ventilated location. Avoid breathing fumes of these products during welding operations. Open containers on a stable surface. Packages of these products must be properly labeled. When these products are used during welding operations, follow the requirements of the Federal Occupational Safety and Health Welding and Cutting Standard (29 CFR 1910 Subpart Q) and the safety standards of the American National Standards Institute for welding and cutting (ANSI Z49.1). Store packages in a cool, dry location. Store away from incompatible materials (see Section 10, Stability and Reactivity).

PROTECTIVE PRACTICES DURING MAINTENANCE OF CONTAMINATED EQUIPMENT: Not applicable.

8. EXPOSURE CONTROLS - PERSONAL PROTECTION

VENTILATION AND ENGINEERING CONTROLS: Use with adequate ventilation to ensure exposure levels are maintained below the limits provided in Section 2 (Composition and Information on Ingredients). Prudent practice is to ensure eyewash/safety shower stations are available near areas where these products are used.

RESPIRATORY PROTECTION: Maintain airborne contaminant concentrations below guidelines listed in Section 2 (Composition and Information on Ingredients). If respiratory protection is needed (i.e. a Weld Fume Respirator, or Air-Line Respirator for welding in confined spaces), U.S. Federal OSHA Standard (29 CFR 1910.134), applicable U.S. State regulations, or the Canadian CSA Standard Z94.4-93 and applicable standards of Canadian Provinces. Respiratory Protection is recommended to be worn during welding operations. Oxygen levels below 19.5% are considered IDLH by OSHA. In such atmospheres, use of a full-facepiece pressure/demand SCBA or a full facepiece, supplied air respirator with auxiliary self-contained air supply is required under OSHA's Respiratory Protection Standard (1910.134-1998 The following are NIOSH recommendations for respirator selection for Welding fumes, based on NIOSH REL:

CONCENTRATION	RESPIRATORY EQUIPMENT FOR WELDING FUMES
At Concentrations above the NIOSH REL, or where there is no REL, at any Detectable Concentration:	Any self-contained breathing apparatus that has a full facepiece and is operated in a pressure-demand or other positive-pressure mode; or any supplied-air respirator that has a full facepiece and is operated in a pressure-demand or other positive-pressure mode in combination with an auxiliary self-contained breathing apparatus operated in pressure-demand or other positive-pressure mode.
Escape:	Any air-purifying, full-facepiece respirator (gas mask) with a chin-style, front- or back-mounted organic vapor canister having a high-efficiency particulate filter; or any appropriate escape-type, self-contained breathing apparatus
NOTE:	IDLH Concentration: Potential NIOSH carcinogen. [Not determined yet].

8. EXPOSURE CONTROLS - PERSONAL PROTECTION (Continued)

EYE PROTECTION: Safety glasses. When these products are used in conjunction with welding, wear safety glasses, goggles, welding helmet or face-shield with filter lens of appropriate shade number (per ANSI Z49.1-1988, "Safety in Welding

and Cutting"). If necessary, refer to U.S. OSHA 29 CFR 1910.133, or appropriate Canadian Standards. If necessary, refer to U.S. OSHA 29 CFR 1910.138, or appropriate Standards of Canada.

HAND PROTECTION: Wear gloves for routine industrial use. When these products are used in conjunction with welding, wear gloves that protect from sparks and flame (per ANSI Z49.1-1988, "Safety in Welding and Cutting"). If necessary, refer to U.S. OSHA 29 CFR 1910.138, or appropriate Standards of Canada.

BODY PROTECTION: None normally needed for normal circumstances of use. Use body protection appropriate for task (i.e. apron, coveralls, chemically resistant boots). If a hazard of injury to the feet exists due to falling objects, rolling objects, where objects may pierce the soles of the feet or where employee's feet may be exposed to electrical hazards, use foot protection, as described in U.S. OSHA 29 CFR 1910.136.

9. PHYSICAL and CHEMICAL PROPERTIES

The following information is for elemental iron:

RELATIVE VAPOR DENSITY (air = 1): Not applicable.
SPECIFIC GRAVITY (water = 1): 7.86
SOLUBILITY IN WATER: Insoluble.
VAPOR PRESSURE, mm Hg @ 20°C: Not applicable.
ODOR THRESHOLD: Not applicable.
EVAPORATION RATE (nBuAc = 1): Not applicable.
FREEZING/MELTING POINT: 1535°C (2795°F)
pH: Not applicable.
BOILING POINT: 3000°C (5432°F)
COEFFICIENT OF OIL/WATER DISTRIBUTION (PARTITION COEFFICIENT): Not applicable.

The following information is for these products:

APPEARANCE AND COLOR: These products consist of solid rods, which are odorless.
HOW TO DETECT THIS SUBSTANCE (warning properties): The appearance is a distinctive characteristic of these products.

10. STABILITY and REACTIVITY

STABILITY: Stable.

DECOMPOSITION PRODUCTS: Iron fumes, a variety of iron compounds, carbon dioxide, carbon monoxide, metal oxides.

NOTE: The composition and quality of welding fumes and gases are dependent upon the metal being welded, the process, the procedure, and the filler used. Other conditions that could also influence the composition and quantity of fumes and gases to which workers may be exposed include the following: any coatings on metal being welded (e.g., paint, plating, or galvanizing), the number of welders and the volume of the work area, the quality of ventilation, the position of the welder's head with respect to the fume plume, and the presence of other contaminates in the atmosphere. When the filler is consumed, the fume and gas decomposition products generated are different in percent and form from the ingredients listed in Section 2 (Composition and Information on Ingredients). Fume and gas decomposition products, and not the ingredients in the filler, are important. Concentration of the given fume or gas component may decrease or increase by many times the original concentration. New compounds in the filler may form. Decomposition products of normal operations include not only those originating from volatilization, reaction, or oxidation of the product's components but also those from base metals and any coating (as noted previously). The best method to determine the actual composition of generated fumes and gases is to take an air sample from inside the welder's helmet if worn or in breathing zone. For additional information, refer to the American Welding Society Publication, "Fumes and Gases in the Welding Environment".

MATERIALS WITH WHICH SUBSTANCE IS INCOMPATIBLE: Strong acids, strong oxidizers, halogens, phosphorous.

HAZARDOUS POLYMERIZATION: Will not occur.

CONDITIONS TO AVOID: Avoid uncontrolled exposure to extreme temperatures and incompatible materials.

PART IV *Is there any other useful information about this material?*

11. TOXICOLOGICAL INFORMATION

TOXICITY DATA: Presented below are human toxicological data available for the components of these products present in concentration greater than 1%. Other data for animals are available for the components of these products, but are not presented in this Material Safety Data Sheet.

PHOSPHORUS (YELLOW):
LDLo (oral, woman) = 22 mg/kg; cardiovascular effects
TDLo (oral, woman) = 11 mg/kg
LDLo (oral, human) = 1400 μg/kg
LDLo (oral, woman) = 4600 μg/kg; pulmonary system, gastrointestinal tract, skin effects
TDLo (oral, woman) = 2600 μg/kg

MANGANESE:
TCLo (inhalation, man) = 2300 $\mu g/m^3$; BRN, central nervous system effects **IRON:** TDLo (oral, child) = 77 mg/kg; BAH, gastrointestinal tract, blood effects
SULFUR: Eye Irritancy (human) = 8 ppm **COPPER:** TDLo (oral, human) = 1200 μg/kg; gastrointestinal tract effects

11. TOXICOLOGICAL INFORMATION (Continued)

SUSPECTED CANCER AGENT: The components of these products are listed as follows:

COPPER: EPA-D (Not Classifiable as to Human Carcinogenicity)

CHROMIUM: ACGIH TLV-A4 (Not Classifiable as a Human Carcinogen; agents which cause concern that they could be carcinogenic for humans but which cannot be assessed conclusively because of lack of data), EPA-D (Not Classifiable as to Human Carcinogenicity (inadequate human and animal evidence of carcinogenicity or no data available), EPA-CBD (Cannot Be Determined); IARC-3 (Unclassifiable as to Carcinogenicity in Humans)

PHOSPHOROUS: EPA-D (Not Classifiable as to Human Carcinogenicity)

CHROMIUM VI: ACGIH TLV-A1 (Confirmed Human Carcinogen : Agent is carcinogenic to humans based epidemiologic studies of, or convincing clinical evidence in, exposed humans),EPA-A (Human Carcinogen: sufficient evidence from epidemiologic studies to support a causal association between exposure and cancer), IARC-1(Carcinogenic to Humans: sufficient evidence of carcinogenicity),NIOSH-X (Carcinogen defined with no further categorization),NTP-1(Known to be carcinogenic: sufficient evidence from human studies), MAK-1(Substances which are considered to be carcinogenic for man because adequate results of long-term animal studies or evidence from animal and epidemiological studies)

CHROMIUM OXIDE: ACGIH TLV-A4 (Not Classifiable as a Human Carcinogen; agents which cause concern that they could be carcinogenic for humans but which cannot be assessed conclusively because of lack of data), EPA-D (Not Classifiable as to Human Carcinogenicity (inadequate human and animal evidence of carcinogenicity or no data available), EPA-CBD (Cannot Be Determined); IARC-3 (Unclassifiable as to Carcinogenicity in Humans)

IRON (as Iron Oxide): ACGIH TLV-A4 (Not Classifiable as a Human Carcinogen; agents which cause concern that they could be carcinogenic for humans but which cannot be assessed conclusively because of lack of data), IARC-3 (Unclassifiable as to Carcinogenicity in Humans)

MANGANESE: EPA-D (Not Classifiable as to Human Carcinogenicity)

NICKEL: ACGIH TLV-A5 (Not Suspected as a Human Carcinogen), IARC-2B (Possibly Carcinogenic to Humans), MAK-1(Substances That Cause Cancer in Man and Which Can Be Assumed to Make a Significant Contribution to Cancer Risk), NIOSH-Ca (Potential Occupational Carcinogen with No Further Categorization), NTP-R (Reasonably Anticipated to Be A Human Carcinogen)

The other components of these products are not found on the following lists: FEDERAL OSHA Z LIST, NTP, IARC, and CAL/OSHA and therefore are not considered to be, nor suspected to be, cancer-causing agents by these agencies.

IRRITANCY OF PRODUCT: Dusts or fumes of these products may be irritating to contaminated skin and eyes. Fumes may be irritating to the respiratory system.

SENSITIZATION TO THE PRODUCT: Hypersensitivity to the Nickel component of these products can cause allergic contact dermatitis, asthma, and conjunctivitis. Rare cases of allergic contact dermatitis have been reported in people working with copper dust.

REPRODUCTIVE TOXICITY INFORMATION: Listed below is information concerning the effects of these products and their components on the human reproductive system.

Mutagenicity: These products are not reported to produce mutagenic effects in humans. Animal mutation data are available for the, Chromium (III) Oxide, Molybdenum, Nickel, components of these products; these data were obtained during clinical studies on specific animal tissues exposed to high doses of this compound.

Embryotoxicity These products are not reported to produce embryotoxic effects in humans.

Teratogenicity: These products are not reported to cause teratogenic effects in humans. Clinical studies on test animals exposed to relatively high doses of the Copper, Molybdenum, and Nickel components of these products indicate teratogenic effects.

Reproductive Toxicity: These products are not reported to cause reproductive effects in humans. Clinical studies on test animals exposed to relatively high doses of the Copper, Molybdenum and Phosphorus components of these products indicate adverse reproductive effects.

A mutagen is a chemical, which causes permanent changes to genetic material (DNA) such that the changes will propagate through generational lines. An embryotoxin is a chemical, which causes damage to a developing embryo (i.e., within the first eight weeks of pregnancy in humans), but the damage does not propagate across generational lines. A teratogen is a chemical, which causes damage to a developing fetus, but the damage does not propagate across generational lines. A reproductive toxin is any substance, which interferes in any way with the reproductive process.

12. ECOLOGICAL INFORMATION

ALL WORK PRACTICES MUST BE AIMED AT ELIMINATING ENVIRONMENTAL CONTAMINATION.

ENVIRONMENTAL STABILITY: The components of these products are expected to persist in the environment for an extended period of time. Iron, the major component in some of these products, will react with water and air to form a variety of stable iron oxides. The following environmental data are available for components of these products:

CHROMIUM: Chromium (metal) is insoluble in water, and is not oxidized by air, even in the presence of much moisture. The biological half-life of Chromium is listed as 0.5, 5.9, and 83.4 days, respectively, for three different components. Snails show a bioaccumulation factor of $1x10^6$ (total Chromium).

PHOSPHORUS (RED): Bioconcentrates in sediments, clams, fish, birds, and mammals**.**

COPPER: Solubility: Insoluble. There is no evidence of any biotransformation for copper compounds. Copper is accumulated by all plants and animals. BCF Algae = 12; plants = 1,000; invertebrate = 1,000, fish = 667 and fish =200 (Soluble copper salts).

NICKEL: Water solubility: Insoluble. Nickel is stable in air at ordinary temperature and is not affected by water. No data were found to suggest that nickel is involved in any biological transformation in the aquatic environment.

EFFECT OF MATERIAL ON PLANTS or ANIMALS: These products are not expected to cause adverse effects on plant or animal life. Animal studies on copper, manganese, nickel, and silicon indicate various health effects after ingestion and exposures. **SULFUR:** Carrot and bean production is greatly reduced with high sulfur residues in the soil.

EFFECT OF CHEMICAL ON AQUATIC LIFE: These products may cause adverse effects on aquatic life, especially if large quantities are released into bodies of water. Low chronic aquatic limits indicate a high chronic hazard, it may be concentrated to toxic levels in food chain. The Nickel component of these products is toxic to aquatic life. Exposure of 0.095 ppm of Nickel for 3 weeks to Daphnid and Fathead minnows affected reproduction in these fish.

PHOSPHORUS (RED): Radioactive phosphorus has been concentrated by factors of 75,000 by waterfowl and up to 850,000 by aquatic life**.**

SULFUR: TLm (mosquito fish) 10,000 ppm/ 96 hours/ fresh water

13. DISPOSAL CONSIDERATIONS

PREPARING WASTES FOR DISPOSAL: Waste disposal must be in accordance with appropriate Federal, State, and local regulations. These products, if unaltered by use, may be disposed of by treatment at a permitted facility or as advised by your local hazardous waste regulatory authority.

EPA WASTE NUMBER: Wastes of these products should be tested per the Toxicity Characteristic Leaching Procedures requirements of RCRA to determine if such wastes meet the following characteristic: D007 (Chromium) 5.0 mg/L (Regulated Level).

14. TRANSPORTATION INFORMATION

THESE PRODUCTS ARE NOT HAZARDOUS (Per 49 CFR 172.101) BY THE U.S. DEPARTMENT OF TRANSPORTATION.

PROPER SHIPPING NAME: Not applicable.
HAZARD CLASS NUMBER and DESCRIPTION: Not applicable.
UN IDENTIFICATION NUMBER: Not applicable.
PACKING GROUP: Not applicable.
DOT LABEL(S) REQUIRED: Not applicable.
NORTH AMERICAN EMERGENCY RESPONSE GUIDEBOOK NUMBER, 2000: Not applicable.

MARINE POLLUTANT: No component of these products is designated as a marine pollutant by the Department of Transportation (49 CFR 172.101, Appendix B). The Department of Transportation (49 CFR 172.101, Appendix B), lists Copper, metal powder as a Marine Pollutant. This component is not present in the specific form listed and therefore, this product does not meet the marking requirement of 49 CFR 172.322.

TRANSPORT CANADA TRANSPORTATION OF DANGEROUS GOODS REGULATIONS: These products are not considered as dangerous goods, per regulations of Transport Canada.

15. REGULATORY INFORMATION

ADDITIONAL U.S. REGULATIONS:

U.S. SARA REPORTING REQUIREMENTS: The components of these products are subject to the reporting requirements of Sections 302, 304 and 313 of Title III of the Superfund Amendments and Reauthorization Act, as follows:

CHEMICAL NAME	SARA 302 (40 CFR 355, Appendix A)	SARA 304 (40 CFR Table 302.4)	SARA 313 (40 CFR 372.65)
Chromium	No	Yes	No
Copper	No	Yes	Yes
Chromium (III) Oxide (Chromium Compound Category)	No	Yes	Yes
Manganese	No	No	Yes
Nickel	No	Yes	Yes

15. REGULATORY INFORMATION (Continued)

ADDITIONAL U.S. REGULATIONS:

U.S. SARA THRESHOLD PLANNING QUANTITY: There are no specific Threshold Planning Quantities for the components of these products. The default Federal MSDS submission and inventory requirement filing threshold of 10,000 lbs. (4,540 kg) therefore applies, per 40 CFR 370.20.

U.S. TSCA INVENTORY STATUS: The components of these products are listed on the TSCA Inventory.

U.S. CERCLA REPORTABLE QUANTITY (RQ): Chromium = 5000 lbs; Copper =5000 lbs.; Nickel = 100 lbs; RQs for Chromium, Copper, and Nickel are applicable to particles 100 micrometers or less in diameter.

OTHER U.S. FEDERAL REGULATIONS: Not applicable.

STATE REGULATORY INFORMATION: The components of these products are covered under specific State regulations, as denoted below:

Alaska-Designated Toxic and Hazardous Substances:, Chromium, Copper Fume, Chromium (III) Compounds), Molybdenum, Nickel, Phosphorus .

California-Permissible Exposure Limits for Chemical Contaminants:, Chromium, Copper, Manganese, Nickel, Phosphorus , Silicon, and.

Florida-Substance List: Chromium, Copper, Manganese, Molybdenum, Nickel, Sulfur and Phosphorus.

Illinois-Toxic Substance List: Chromium, Copper, Manganese, Nickel, Phosphorus, Silicon, Molybdenum, , and.

Kansas-Section 302/313 List: Chromium, Manganese, Nickel, and Copper.

Massachusetts-Substance List: Chromium, Chromium (III) Oxide, Copper, Sulfur Manganese, Molybdenum, Nickel, Phosphorus.

Michigan-Critical Materials Register: Chromium, Copper, and Nickel.

Minnesota-List of Hazardous Substances:, Chromium, Manganese, Nickel, , Silicon, and Phosphorus.

Missouri-Employer Information/Toxic Substance List:, Chromium, Chromium (III) Oxide, Copper , Manganese, Molybdenum, Nickel, Phosphorus, Silicon,.

New Jersey-Right to Know Hazardous Substance List: Chromium, Chromium (III) Oxide, Copper, Phosphorus , Manganese, Molybdenum, Nickel, Sulfur ,.

North Dakota-List of Hazardous Chemicals, Reportable Quantities: Chromium, Copper, Nickel, and Phosphorus.

Pennsylvania-Hazardous Substance List: Copper, Chromium, Manganese, Molybdenum, Nickel, Sulfur , Silicon, and Phosphorus.

Rhode Island-Hazardous Substance List:, Chromium, Copper Fume, Manganese, Molybdenum, Nickel, Sulfur , Silicon, and Phosphorus.

Texas-Hazardous Substance List: Chromium, Manganese, Copper Fume Molybdenum, Nickel, and Phosphorus.

West Virginia-Hazardous Substance List: Chromium, Phosphorus, Manganese, Molybdenum, Nickel, and Copper Fume.

Wisconsin-Toxic and Hazardous Substances: Chromium, Manganese, Molybdenum, Nickel, Copper Fume and Phosphorus.

CALIFORNIA SAFE DRINKING WATER AND TOXIC ENFORCEMENT ACT (PROPOSITION 65): The Chromium and Nickel components of these products are on the California Proposition 65 List. **WARNING: These products may contain chemicals, and when used for welding may produce fumes or gases containing chemicals, known to the State of California to cause cancer, and/or birth defects (or other reproductive harm.)**

LABELING (Precautionary Statements):

WARNING:

PROTECT yourself and others. Read and understand this information.
FUMES AND GASES can be hazardous to your health.
ARC RAYS can injure your eyes and burn skin.
ELECTRIC SHOCK can kill.

- Before use, read and understand the manufacturer's instructions. Material Safety Data Sheets (MSDSs), and your employer's safety policies.
- Keep your head out of the fumes.
- Use enough ventilation, exhaust at the arc, or both, to keep fumes and gases from your breathing zone and the general area.
- Wear correct eye, ear, and body protection.
- See American National Standard Z49.1 *Safety in Welding, Cutting, and Allied Processes*, published by the American Welding Society, 550 N.W. LeJeune Road, Miami, Florida 33126. OSHA Safety and Health Standards, *29 CFR 1910*, available from the U.S. Government Printing Office, Washington, DC 20402.

DO NOT REMOVE THIS INFORMATION.

ADDITIONAL CANADIAN REGULATIONS:

CANADIAN DSL/NDSL INVENTORY STATUS: The components of these products are on the DSL Inventory.

OTHER CANADIAN REGULATIONS: Not applicable.

CANADIAN ENVIRONMENTAL PROTECTION ACT (CEPA) PRIORITIES SUBSTANCES LISTS: Not applicable.

CANADIAN WHMIS SYMBOLS: Class D2A/D2B: Materials Causing Other Toxic Effects-Contains Potential Sensitizer

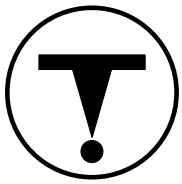

16. OTHER INFORMATION

DATE OF PRINTING: November 24, 2010

This Material Safety Data Sheet is offered pursuant to OSHA's Hazard Communication Standard (29 CFR 1910.1200). Other government regulations must be reviewed for applicability to these products. The information contained herein relates only to the specific product. If the product is combined with other materials, all component properties must be considered. To the best of the Harris Products Group knowledge, the information and recommendations contained in this publication are reliable and accurate as of the date of issue. However, accuracy, suitability, or completeness are not guaranteed, and no warranty, guarantee, or representation, expressed or implied, is made Harris Products Group. as to the absolute correctness or sufficiency of any representation contained in this and other publications Harris Products Group. assumes no responsibility in connection therewith; nor can it be assumed that all acceptable safety measures may not be required under particular or exceptional conditions or circumstances. Data may be changed from time to time. Be sure to consult the latest edition.

DEFINITIONS OF TERMS

A large number of abbreviations and acronyms appear on a MSDS. Some of these, which are commonly used, include the following:

CAS #: This is the Chemical Abstract Service Number, which uniquely identifies each constituent.

EXPOSURE LIMITS IN AIR:

ACGIH - American Conference of Governmental Industrial Hygienists, a professional association which establishes exposure limits. **TLV -** Threshold Limit Value - an airborne concentration of a substance, which represents conditions under which it is generally believed that nearly all workers, may be repeatedly exposed without adverse effect. The duration

must be considered, including the 8-hour Time Weighted Average **(TWA)**, the 15-minute Short Term Exposure Limit, and the instantaneous Ceiling Level **(C)**. Skin absorption effects must also be considered.

OSHA - U.S. Occupational Safety and Health Administration.

PEL - Permissible Exposure Limit - This exposure value means exactly the same as a TLV, except that it is enforceable by OSHA. The OSHA Permissible Exposure Limits are based in the 1989 PELs and the June, 1993 Air Contaminants Rule (Federal Register: 58: 35338-35351 and 58: 40191). Both the current PELs and the vacated PELs are indicated. The phrase, "Vacated 1989 PEL," is placed next to the PEL, which was vacated by Court Order. **IDLH -** Immediately Dangerous to Life and Health **-** This level represents a concentration from which one can escape within 30-minutes without suffering escape-preventing or permanent injury. **The DFG - MAK** is the Republic of Germany's Maximum Exposure Level, similar to the U.S. PEL. **NIOSH** is the National Institute of Occupational Safety and Health, which is the research arm of the U.S. Occupational Safety and Health Administration (**OSHA**). NIOSH issues exposure guidelines called Recommended Exposure Levels (**REL**s). When no exposure guidelines are established, an entry of **NE** is made for reference.

HAZARD RATINGS:

HAZARDOUS MATERIALS IDENTIFICATION SYSTEM: Health Hazard: **0** (minimal acute or chronic exposure hazard); **1** (slight acute or chronic exposure hazard); **2** (moderate acute or significant chronic exposure hazard); **3** (severe acute exposure hazard; onetime overexposure can result in permanent injury and may be fatal); **4** (extreme acute exposure hazard; onetime overexposure can be fatal). Flammability Hazard: **0** (minimal hazard); **1** (materials that require substantial pre-heating before burning); **2** (combustible liquid or solids; liquids with a flash point of 38-93°C [100-200°F]); **3** (Class IB and IC flammable liquids with flash points below 38°C [100°F]); **4** (Class IA flammable liquids with flash points below 23°C [73°F] and boiling points below 38°C [100°F]. Reactivity Hazard: **0** (normally stable); 1 (material that can become unstable at elevated temperatures or which can react slightly with water); **2** (materials that are unstable but do not detonate or which can react violently with water); **3** (materials that can detonate when initiated or which can react explosively with water); **4** (materials that can detonate at normal temperatures or pressures).

NATIONAL FIRE PROTECTION ASSOCIATION: Health Hazard: **0** (material that on exposure under fire conditions would offer no hazard beyond that of ordinary combustible materials); **1** (materials that on exposure under fire conditions could cause irritation or minor residual injury); **2** (materials that on intense or continued exposure under fire conditions could cause temporary incapacitation or possible residual injury); **3** (materials that can on short exposure could cause serious temporary or residual injury); **4** (materials that under very short exposure causes death or major residual injury). Flammability Hazard and Reactivity Hazard: Refer to definitions for "Hazardous Materials Identification System".

FLAMMABILITY LIMITS IN AIR:

Much of the information related to fire and explosion is derived from the National Fire Protection Association (**NFPA**). Flash Point - Minimum temperature at which a liquid gives off sufficient vapors to form an ignitable mixture with air. Autoignition Temperature: The minimum temperature required to initiate combustion in air with no other source of ignition. LEL - the lowest percent of vapor in air, by volume, that will explode or ignite in the presence of an ignition source. UEL - the highest percent of vapor in air, by volume, that will explode or ignite in the presence of an ignition source.

TOXICOLOGICAL INFORMATION:

Human and Animal Toxicology: Possible health hazards as derived from human data, animal studies, or from the results of studies with similar compounds are presented. Definitions of some terms used in this section are: **LD_{50}** - Lethal Dose (solids & liquids) which kills 50% of the exposed animals; **LC_{50}** - Lethal Concentration (gases) which kills 50% of the exposed animals; **ppm** concentration expressed in parts of material per million parts of air or water; **mg/m^3** concentration expressed in weight of substance per volume of air; **mg/kg** quantity of material, by weight, administered to a test subject, based on their body weight in kg. Other measures of toxicity include **TDLo**, the lowest dose to cause a symptom and **TCLo** the lowest concentration to cause a symptom; **TDo**, **LDLo**, and **LDo**, or **TC**, **TCo**, **LCLo**, and **LCo**, the lowest dose (or concentration) to cause lethal or toxic effects. **Cancer Information:** The sources are: **IARC** - the International Agency for Research on Cancer; **NTP** - the National Toxicology Program, **RTECS** - the Registry of Toxic Effects of Chemical Substances, **OSHA** and **CAL/OSHA**. IARC and NTP rate chemicals on a scale of decreasing potential to cause human cancer with rankings from 1 to 4. Subrankings (2A, 2B, etc.) are also used. **Other Information: BEI** - ACGIH Biological Exposure Indices, represent the levels of determinants which are most likely to be observed in specimens collected from a healthy worker who has been exposed to chemicals to the same extent as a worker with inhalation exposure to the TLV. **Ecological Information:** EC is the effect concentration in water. **BCF** = Bioconcentration Factor, which is used to determine if a substance will concentrate in lifeforms which consume contaminated plant or animal matter. Coefficient of Oil/Water Distribution is represented by **log K_{ow}** or **log K_{oc}** and is used to assess a substance's behavior in the environment.

REGULATORY INFORMATION:

This section explains the impact of various laws and regulations on the material. **U.S.: EPA** is the U.S. Environmental Protection Agency. **DOT** is the U.S. Department of Transportation. **SARA** is the Superfund Amendments and Reauthorization Act. **TSCA** is the U.S. Toxic Substance Control Act. **CERCLA (or Superfund)** refers to the Comprehensive Environmental Response, Compensation, and Liability Act. Labeling is per the American National Standards Institute (**ANSI Z129.1**). **CANADA: CEPA** is the Canadian Environmental Protection Act. **WHMIS** is the Canadian Workplace Hazardous Materials Information System. **TC** is Transport Canada. **DSL/NDSL** are the Canadian Domestic/Non-Domestic Substances Lists. **The CPR is the Canadian Product Regulations.** This section also includes information on the precautionary warnings, which appear, on the materials package label.

JB

MATERIAL SAFETY DATA SHEET

This Material Safety Data Sheet (MSDS) is for welding consumables and related products and may be used to comply with OSHA's Hazard Communication standard, 29 CFR 1910.1200, Superfund Amendments and Reauthorization Act (SARA) of 1986 Public Law 99-499 and Canadian Workplace Hazardous Materials Information System (WHMIS) per Health Canada administrative policy. The OSHA standard must be consulted for specific requirements. This Safety Data Sheet complies with ISO 11014-1 and ANSI Z400.1. This document is available in several languages on our website at www.hobartbrothers.com, from your sales representative or by calling customer service at +1 (937) 332-4000.

SECTION 1 – IDENTIFICATION

Manufactured by: Hobart Brothers Aluminum
Address: 1631 International Drive, Traverse City, MI 49686

Telephone No: +1 (231) 933-1234
Emergency No: +1 (231) 933-1234

Website: www.hobartbrothers.com

Products Type: ALUMINUM ALLOY SOLID WIRE WELDING ELECTRODE AND RODS
Trade Name: MaxalMig and MaxalTig: 1100, 4043, 4943, 4047, 5087, 5183, 5356, 5554 and 5556

SECTION 2 – IDENTIFICATION OF HAZARDS

IMPORTANT - This section covers the hazardous materials from which this product is manufactured. The fumes and gases produced during welding with normal use of this product are also addressed in Section 8. The term "hazardous" in this section should be interpreted as a term required and defined in OSHA Hazard Communication Standard (29 CFR Part 1910.1200).

HAZARDOUS INGREDIENT	CAS	IARC[E]	NTP[Z]	OSHA[H]	65[Θ]
ALUMINUM	7429-90-5	----	----	----	----
BERYLLIUM	7440-41-7	1	K	----	X
CHROMIUM	7440-47-3	1[ΣΣ], 3[Σ]	K[ΣΣ]	X[ΣΣ]	X[ΣΣ]
COPPER	7440-50-8	----	----	----	----
IRON	7439-89-6	----	----	----	----
MAGNESIUM	7439-95-4	----	----	----	----
MANGANESE	7439-96-5	----	----	----	----
NICKEL	7440-02-0	1	K	X	X
SILICON	7440-21-3	----	----	----	----
(Amorphous Silica Fume)	69012-64-2	3	K	----	X

E – International Agency for Research on Cancer (1 – Human Carcinogen, 2A – Probably Carcinogenic to Humans, 2B – Possibly Carcinogenic to Humans, 3 – Unclassifiable as to Carcinogenicity in Humans, 4 Probably Not Carcinogenic to Humans) Z – US National Toxicology Program (K – Known Carcinogen, S – Suspected Carcinogen) H – OSHA Known Carcinogen List Θ – California Proposition 65 (X – On Proposition 65 list) --- Dashes indicate the ingredient is not listed with the IARC, NTP, OSHA or 65 – Metal and Chromium III Compounds ΣΣ – Chromium VI Compounds Ψ – Silica Crystalline α-Quartz

WARNING! - Avoid breathing welding fumes and gases, they may be dangerous to your health. Always use adequate ventilation. Always use appropriate personal protective equipment.

PRIMARY ROUTES OF ENTRY: Respiratory System, Eyes and/or Skin.

ARC RAYS: The welding arc can injure eyes and burn skin.

ELECTRIC SHOCK: Arc welding and associated processes can kill. See Section 8.

FUMES AND GASES: Can be dangerous to your health.

Welding fumes and gases cannot be classified simply. The composition and quantity of both are dependent upon the metal being welded, the process, procedures and electrodes used. Most fume ingredients are present as complex oxides and compounds and not as pure metals. When the electrode is consumed, the fume and gas decomposition products generated are different in percent and form from the ingredients listed in Section 3. Decomposition products of normal operation include those originating from the volatilization, reaction or oxidation of the materials shown in this section, plus those from the base metal and coating, etc., as noted above. Monitor for the materials identified in the list within this section.

Fumes from the use of this product may contain complex oxides or compounds of the following elements and molecules: amorphous silica fume, beryllium, chromium, manganese and nickel. Other reasonably expected constituents of the fume would also include complex oxides of iron and silicon. Gaseous reaction products may include carbon monoxide and carbon dioxide. Ozone and nitrogen oxides may be formed by the radiation from the arc. Other conditions which also influence the composition and quantity of the fumes and gases to which workers may be exposed include: coatings on the metal being welded (such as paint, plating or galvanizing), the number of welders and the volume of the work area, the quality and amount of ventilation, the position of the welder's head with respect to the fume plume, as well as the presence of contaminants in the atmosphere (such as chlorinated hydrocarbon vapors from cleaning and degreasing activities). One recommended way to determine the composition and quantity of fumes and gases to which workers are exposed is to take an air sample inside the welder's helmet if worn or in the worker's breathing zone. See ANSI/AWS F1.1, available from the "American Welding Society", P.O. Box 351040, Miami, FL 33135. Also, from AWS is F1.3 "Evaluating Contaminants in the Welding Environment - A Sampling Strategy Guide", which gives additional advice on sampling.

SECTION 3 – HAZARDOUS INGREDIENTS

CONTENT PERCENTAGE BY INGREDIENTS

INGREDIENT	CAS	%WEIGHT	INGREDIENT	CAS	E	%WEIGHT
ALUMINUM	7429-90-5	80-99.7	MAGNESIUM	7439-95-4		0-6
BERYLLIUM	7440-41-7	<0.0003	MANGANESE	7439-96-5		0-2
CHROMIUM	7440-47-3	0-0.5	NICKEL	7440-02-0		0-0.05
COPPER	7440-50-8	0-0.5	SILICON	7440-21-3		0-14
IRON	7439-89-6	0-1	(Amorphous Silica Fume)	69012-64-2		

SECTION 4 – FIRST AID MEASURES

INHALATION: If breathing is difficult provide fresh air and contact physician.

EYE/SKIN INJURIES: For radiation burns, see physician.

Section 11 of this MSDS covers the acute effects of overexposure to the various ingredients within the welding consumable. Section 8 of this MSDS lists the exposure limits and covers methods for protecting yourself and your co-workers.

SECTION 5 - FIRE AND EXPLOSION HAZARD DATA

Welding consumables applicable to this sheet as shipped are nonreactive, nonflammable, nonexplosive and essentially nonhazardous until welded. Welding arcs and sparks can ignite combustibles and flammable products. Unused welding consumables may remain hot for a period of time after completion of a welding process. See American National Standard (ANSI) Z49.1 for further general safety information on the use and handling of welding consumables and associated procedures.

SECTION 6 - ACCIDENTAL RELEASE MEASURES

Solid objects can be picked up and placed into a container. Wear proper personal protective equipment while handling. Do not discard as general trash.

SECTION 7 - HANDLING AND STORAGE

HANDLING: No specific requirements in the form supplied. Handle with care to avoid cuts. Wear gloves when handling welding consumables. Avoid exposure to dust. Do not ingest. Some individuals can develop an allergic reaction to certain materials. Retain all warning and product labels.

STORAGE: Keep separate from acids and strong bases to prevent possible chemical reactions.

SECTION 8 - EXPOSURE CONTROL AND PERSONAL PROTECTION

Read and understand the instructions and the labels on the packaging. Welding fumes do not have a specific OSHA PEL or ACGIH TLV. The OSHA PEL for Particulate – Not Otherwise Classified (PNOC) is 5 mg/m^3 – Respirable Fraction, 15 mg/m^3 – Total Dust. The ACGIH TLV for Particles – Not Otherwise Specified (PNOS) is 3 mg/m^3 – Respirable Particles, 10 mg/m^3 – Inhalable Particles. The individual complex compounds within the fume may have a lower OSHA PEL or ACGIH TLV than the OSHA Particulate – Not Otherwise Classified (PNOC) and ACGIH Particles – Not Otherwise Specified (PNOS). An Industrial Hygienist, the OSHA Permissible Exposure Limits for Air Contaminants (29 CFR 1910.1000), and the ACGIH Threshold Limit Values should be consulted to determine the specific fume constituents present and their respective exposure limits. All exposure limits are in milligrams per cubic meter (mg/m^3).

INGREDIENT	CAS	OSHA PEL	ACGIH TLV
ALUMINUM###	7429-90-5	5 R* (Dust)	1 R* {A4}
BERYLLIUM	7440-41-7	0.002, 0.005 CL**	0.00005 {A1}
CHROMIUM#	7440-47-3	1 (Metal)	0.5 (Metal) {A4}
		0.5 (Cr II & Cr III Cpnds)	0.5 (Cr III Cpnds) {A4}
		0.005 (Cr VI Cpnds)	0.05 (Cr VI Sol Cpnds) {A1}
			0.01 (Cr VI Insol Cpnds) {A1}
COPPER	7440-50-8	0.1 (Fume), 1 (Dust)	0.2 (Fume), 1 (Dust)
IRON+	7439-89-6	5 R*	5 R* (Fe2O3) {A4}
MAGNESIUM+	7439-95-4	5 R*	3 R*
MANGANESE#	7439-96-5	5 CL** (Fume)	0.2 I* {A4} ♦
NICKEL#	7440-02-0	1 (Metal)	1.5 I* (Ele) {A5}
		1 (Insol Cpnds)	0.2 I* (Insol Cpnds) {A1}
SILICON+	7440-21-3	5 R*	3 R*
(Amorphous Silica Fume)	69012-64-2	0.8	3 R*

R* - Respirable Fraction R*** - Respirable Fraction - Short Term Exposure Limit I* - Inhalable Fraction I*** - Inhalable Fraction - Short Term Exposure Limit ** - Ceiling Limit *** - Short Term Exposure Limit + - As a nuisance particulate covered under "Particulates Not Otherwise Regulated" by OSHA or "Particulates Not Otherwise Classified" by ACGIH ++ - Crystalline silica is bound within the product as it exists in the package. However, research indicates silica is present in welding fume in the amorphous (noncrystalline) form #- Reportable material under Section 313 of SARA ### - Reportable material under Section 313 of SARA as dust or fume ■ - NIOSH REL TWA and STEL ♦ - Listed under ACGIH Notice of Intended Changes for Mn in 2010 ♦♦ - Limit of 0.02 mg/m^3 is proposed for Respirable Mn in 2011 by ACGIH Ele – Element Sol – Soluble Insol – Insoluble Inorg – Inorganic Cpnds – Compounds NOS – Not Otherwise Specified {A1} - Confirmed Human Carcinogen per ACGIH {A2} - Suspected Human Carcinogen per ACGIH {A3} - Confirmed Animal Carcinogen with Unknown Relevance to Humans per ACGIH {A4} - Not Classifiable as a Human Carcinogen per ACGIH {A5} - Not Suspected as a Human Carcinogen per ACGIH (noncrystalline) form

VENTILATION: Use enough ventilation, local exhaust at the arc or both to keep the fumes and gases below the PEL/TLV/OELs in the worker's breathing zone and the general area. Train the welder to keep his head out of the fumes.

RESPIRATORY PROTECTION: Use NIOSH approved or equivalent fume respirator or air supplied respirator when welding in confined space or where local exhaust or ventilation does not keep exposure below the regulatory limits.

EYE PROTECTION: Wear helmet or use face shield with filter lens. As a rule of thumb begin with Shade Number 14. Adjust if needed by selecting the next lighter and/or darker shade number. Provide protective screens and flash goggles, if necessary, to shield others from the weld arc flash.

PROTECTIVE CLOTHING: Wear hand, head and body protection which help to prevent injury from radiation, sparks and electrical shock. See ANSI Z49.1. At a minimum this includes welder's gloves and a protective face shield, and may include arm protectors, aprons, hats, shoulder protection as well as dark nonsynthetic clothing. Train the welder not to touch live electrical parts and to insulate himself from work and ground.

PROCEDURE FOR CLEANUP OF SPILLS OR LEAKS: Not applicable

SPECIAL PRECAUTIONS (IMPORTANT): Maintain exposure below the PEL/TLV/OEL. Use industrial hygiene monitoring to ensure that your use of this material does not create exposures which exceed PEL/TLV/OEL. Always use exhaust ventilation. Refer to the following sources for important additional information: American National Standard (ANSI) Z49.1; Safety in Welding and Cutting published by the American Welding Society, P.O. Box 351040, Miami, FL 33135 and OSHA Publication 2206 (29 CFR 1910), U.S. Government Printing Office, Washington, DC 20402.

SECTION 9 – PHYSICAL AND CHEMCIAL PROPERTIES

Welding consumables applicable to this sheet as shipped are nonreactive, nonflammable, nonexplosive and essentially nonhazardous until welded.

PHYSICAL STATE: Solid Wire

ODOR: N/A

COLOR: Silver / Gray

FORM: Round Wire

SECTION 10 – STABILITY AND REACTIVITY

GENERAL: Welding consumables applicable to this sheet are solid and nonvolatile as shipped. This product is only intended for use per the welding parameters it was designed for. When this product is used for welding, hazardous fumes may be created. Other factors to consider include the base metal, base metal preparation and base metal coatings. All of these factors can contribute to the fume and gases generated during welding. The amount of fume varies with the welding parameters.

STABILITY: This product is stable under normal conditions.

REACTIVITY: Contact with acids or strong bases may cause generation of gas.

SECTION 11 – TOXICOLOGICAL INFORMATION

SHORT-TERM (ACUTE) OVEREXPOSURE EFFECTS: Welding Fumes - May result in discomfort such as dizziness, nausea or dryness or irritation of nose, throat or eyes. **Aluminum Oxide** - Irritation of the respiratory system. **Beryllium** - Can cause irritant dermatitis, allergic contact dermatitis and skin granulomas. Inhalation of excessive levels of beryllium can result in acute pneumonitis (inflammation of the lung tissue). Beryllium can cause lung sensitization in susceptible individuals. **Chromium** - Inhalation of fume with chromium (VI) compounds can cause irritation of the respiratory tract, lung damage and asthma-like symptoms. Swallowing chromium (VI) salts can cause severe injury or

death. Dust on skin can form ulcers. Eyes may be burned by chromium (VI) compounds. Allergic reactions may occur in some people. **Copper** - Metal fume fever characterized by metallic taste, tightness of chest and fever. Symptoms may last 24 to 48 hours following overexposure. **Iron, Iron Oxide** - None are known. Treat as nuisance dust or fume. **Magnesium** - Overexposure to the oxide may cause metal fume fever characterized by metallic taste, tightness of chest and fever. Symptoms may last 24 to 48 hours following overexposure. **Manganese** - Metal fume fever characterized by chills, fever, upset stomach, vomiting, irritation of the throat and aching of body. Recovery is generally complete within 48 hours of the overexposure. **Nickel, Nickel Compounds** - Metallic taste, nausea, tightness in chest, metal fume fever, allergic reaction. **Silicon (Amorphous Silica Fume)** - Dust and fumes may cause irritation of the respiratory system, skin and eyes.

LONG-TERM (CHRONIC) OVEREXPOSURE EFFECTS: Welding Fumes - Excess levels may cause bronchial asthma, lung fibrosis, pneumoconiosis or "siderosis." **Aluminum Oxide** - Pulmonary fibrosis and emphysema. **Beryllium** - Chronic inhalation of dust and fumes by these susceptible individuals can result in a serious disease called Chronic Beryllium Disease (CBD). Often misdiagnosed as sarcoidosis, CBD is an allergic condition in which the lung tissues become inflamed. This inflammation sometimes accompanied with fibrosis (lung scarring), restricts the uptake of oxygen into the blood stream. CBD can, over time, be fatal. Beryllium is listed on the NTP and is known to be carcinogenic to humans. **Chromium** - Ulceration and perforation of nasal septum. Respiratory irritation may occur with symptoms resembling asthma. Studies have shown that chromate production workers exposed to hexavalent chromium compounds have an excess of lung cancers. Chromium (VI) compounds are more readily absorbed through the skin than chromium (III) compounds. Good practice requires the reduction of employee exposure to chromium (III) and (VI) compounds. **Copper** - Copper poisoning has been reported in the literature from exposure to high levels of copper. Liver damage can occur due to copper accumulating in the liver characterized by cell destruction and cirrhosis. High levels of copper may cause anemia and jaundice. High levels of copper may cause central nervous system damage characterized by nerve fiber separation and cerebral degeneration. **Iron, Iron Oxide Fumes** - Can cause siderosis (deposits of iron in lungs) which some researchers believe may affect pulmonary function. Lungs will clear in time when exposure to iron and its compounds ceases. Iron and magnetite (Fe_3O_4) are not regarded as fibrogenic materials. **Magnesium,**- No adverse long term health effects have been reported in the literature. **Manganese** - Long-term overexposure to manganese compounds may affect the central nervous system. Symptoms may be similar to Parkinson's disease and can include slowness, changes in handwriting, gait impairment, muscle spasms and cramps and less commonly, tremor and behavioral changes. Employees who are overexposed to manganese compounds should be seen by a physician for early detection of neurologic problems. Overexposure to manganese and manganese compounds above safe exposure limits can cause irreversible damage to the central nervous system, including the brain, symptoms of which may include slurred speech, lethargy, tremor, muscular weakness, psychological disturbances and spastic gait. **Nickel, Nickel Compounds** - Lung fibrosis or pneumoconiosis. Studies of nickel refinery workers indicated a higher incidence of lung and nasal cancers. **Silicon (Amorphous Silica Fume)** - Research indicates that silica is present in welding fume in the amorphous form. Long term overexposure may cause pneumoconiosis. Noncrystalline forms of silica (amorphous silica) are considered to have little fibrotic potential.

MEDICAL CONDITIONS AGGRAVATED BY EXPOSURE: Persons with pre-existing impaired lung functions (asthma-like conditions). Persons with a pacemaker should not go near welding and cutting operations until they have consulted their doctor and obtained information from the manufacturer of the device. Respirators are to be worn only after being medically cleared by your company-designated physician.

EMERGENCY AND FIRST AID PROCEDURES: Call for medical aid. Employ first aid techniques recommended by the American Red Cross. If irritation or flash burns develop after exposure, consult a physician.

CARCINOGENICITY: Beryllium, **c**hromium VI compounds and nickel compounds are classified as IARC Group 1 and NTP Group K carcinogens. Chromium VI compounds and welding fumes must be considered as carcinogens under OSHA (29 CFR 1910.1200).

CALIFORNIA PROPOSITION 65: WARNING: These products contain or produce a chemical known to the State of California to cause cancer and birth defects (or other reproductive harm). (California Health & Safety Code Section 25249.5 et seq.)

SECTION 12 – ECOLOGICAL INFORMATION

Welding processes can release fumes directly to the environment. Welding wire can degrade if left outside and unprotected. Residues from welding consumables and processes could degrade and accumulate in the soil and groundwater.

SECTION 13 – DISPOSAL CONSIDERATIONS

Use recycling procedures if available. Discard any product, residue, packaging, disposable container or liner in an environmentally acceptable manner, in full compliance with federal, state and local regulations.

SECTION 14 – TRANSPORT INFORMATION

No international regulations or restrictions are applicable. No special precautions are necessary.

SECTION 15 – REGULATORY INFORMATION

Read and understand the manufacturer's instructions, your employer's safety practices and the health and safety instructions on the label and the material safety data sheet. Observe all local and federal rules and regulations. Take all necessary precautions to protect yourself and others.

United States EPA Toxic Substance Control Act: All constituents of these products are on the TSCA inventory list or are excluded from listing.

CERCLA/SARA TITLE III: Reportable Quantities (RQs) and/or Threshold Planning Quantities (TPQs):

Ingredient name	**RQ(lb)**	**TPQ (lb)**
Products on this MSDS are a solid solution in the form of a solid article.	--	--

Spills or releases resulting in the loss of any ingredient at or above its RQ require immediate notification to the National Response Center and to your Local Emergency Planning Committee.

Section 311 Hazard Class
As shipped: Immediate In use: Immediate delayed

EPCRA/SARA TITLE III 313 TOXIC CHEMICALS: The following metallic components are listed as SARA 313 "Toxic Chemicals" and potentially subject to annual SARA 312 reporting: Beryllium, Chromium, Copper, Manganese and Nickel. See Section 3 for weight percentage.

CANADIAN WHMIS CLASSIFICATION: Class D; Division 2, Subdivision A

CANADIAN ENVIRONMENTAL PROTECTION ACT (CEPA): All constituents of these products are on the Domestic Substance List (DSL).

SECTION 16 – OTHER INFORMATION

Safety Data Sheet compliant with European Commission Directives 89/106/EEC and 91/155/EEC may be downloaded from www.hobartbrothers.com.

MERCURY STATEMENT: Mercury is not a normal contaminant in aluminum alloys and neither it nor any of its compounds are used in the manufacture of this product

For additional information please refer to the following sources:

USA: **American National Standard (ANSI) Z49.1** "Safety in Welding and Cutting", **ANSI/American Welding Society (AWS) F1.5** "Methods for Sampling and Analyzing Gases from Welding and Allied Processes", **ANSI/AWS F1.1** "Method for Sampling Airborne Particles Generated by Welding and Allied Processes", **AWSF3.2M/F3.2** "Ventilation Guide for Weld Fume", American Welding Society, 550 North Le Jeune Road, Miami, Florida, 33135. Safety and Health Fact Sheets available from AWS at www.aws.org. **OSHA Publication 2206 (29 C.F.R. 1910),** U.S. Government Printing Office, Superintendent of Documents, P.O. Box 371954, Pittsburgh, PA 15250-7954. **Threshold Limit Values and Biological Exposure Indices**, American Conference of Governmental Hygienists (ACGIH), 6500 Glenway Ave., Cincinnati, Ohio 45211, USA. **NFPA 51B** "Standard for Fire Prevention During Welding, Cutting and Other Hot Work" published by the National Fire Protection Association, 1 Batterymarch Park, Quincy, MA 02169.

Canada: **CSA Standard CAN/CSA-W117.2-01** "Safety in Welding, Cutting and Allied Processes".

HOBART BROTHERS ALUMINUM strongly recommends the users of this product study this MSDS, the product label information and become aware of all hazards associated with welding. HOBART BROTHERS ALUMINUM believes this data to be accurate and to reflect qualified expert opinion regarding current research. However, HOBART BROTHERS ALUMINUM cannot make any expressed or implied warranty as to this information.

JB

MATERIAL SAFETY DATA SHEET

This Material Safety Data Sheet (MSDS) is for welding consumables and related products and may be used to comply with OSHA's Hazard Communication standard, 29 CFR 1910.1200, Superfund Amendments and Reauthorization Act (SARA) of 1986 Public Law 99-499 and Canadian Workplace Hazardous Materials Information System (WHMIS) per Health Canada administrative policy. The OSHA standard must be consulted for specific requirements. This Safety Data Sheet complies with ISO 11014-1 and ANSI Z400.1. This document is available in several languages on our website at www.hobartbrothers.com, from your sales representative or by calling customer service at +1 (937) 332-4000.

SECTION 1 – IDENTIFICATION

Manufactured by: Hobart Brothers Aluminum
Address: 1631 International Drive, Traverse City, MI 49686

Telephone No: +1 (231) 933-1234
Emergency No: +1 (231) 933-1234

Website: www.hobartbrothers.com

Products Type: ALUMINUM ALLOY SOLID WIRE WELDING ELECTRODE AND RODS
Trade Name: MaxalMig and MaxalTig: 1100, 4043, 4943, 4047, 5087, 5183, 5356, 5554 and 5556

SECTION 2 – IDENTIFICATION OF HAZARDS

IMPORTANT - This section covers the hazardous materials from which this product is manufactured. The fumes and gases produced during welding with normal use of this product are also addressed in Section 8. The term "hazardous" in this section should be interpreted as a term required and defined in OSHA Hazard Communication Standard (29 CFR Part 1910.1200).

HAZARDOUS INGREDIENT	CAS	IARC[E]	NTP[Z]	OSHA[H]	65[Θ]
ALUMINUM	7429-90-5	----	----	----	----
BERYLLIUM	7440-41-7	1	K	----	X
CHROMIUM	7440-47-3	1[ΣΣ], 3[Σ]	K[ΣΣ]	X[ΣΣ]	X[ΣΣ]
COPPER	7440-50-8	----	----	----	----
IRON	7439-89-6	----	----	----	----
MAGNESIUM	7439-95-4	----	----	----	----
MANGANESE	7439-96-5	----	----	----	----
NICKEL	7440-02-0	1	K	X	X
SILICON	7440-21-3	----	----	----	----
(Amorphous Silica Fume)	69012-64-2	3	K	----	X

E – International Agency for Research on Cancer (1 – Human Carcinogen, 2A – Probably Carcinogenic to Humans, 2B – Possibly Carcinogenic to Humans, 3 – Unclassifiable as to Carcinogenicity in Humans, 4 Probably Not Carcinogenic to Humans) Z – US National Toxicology Program (K – Known Carcinogen, S – Suspected Carcinogen) H – OSHA Known Carcinogen List Θ – California Proposition 65 (X – On Proposition 65 list) --- Dashes indicate the ingredient is not listed with the IARC, NTP, OSHA or 65 – Metal and Chromium III Compounds ΣΣ – Chromium VI Compounds Ψ – Silica Crystalline α-Quartz

WARNING! - Avoid breathing welding fumes and gases, they may be dangerous to your health. Always use adequate ventilation. Always use appropriate personal protective equipment.

PRIMARY ROUTES OF ENTRY: Respiratory System, Eyes and/or Skin.

ARC RAYS: The welding arc can injure eyes and burn skin.

ELECTRIC SHOCK: Arc welding and associated processes can kill. See Section 8.

FUMES AND GASES: Can be dangerous to your health.

Welding fumes and gases cannot be classified simply. The composition and quantity of both are dependent upon the metal being welded, the process, procedures and electrodes used. Most fume ingredients are present as complex oxides and compounds and not as pure metals. When the electrode is consumed, the fume and gas decomposition products generated are different in percent and form from the ingredients listed in Section 3. Decomposition products of normal operation include those originating from the volatilization, reaction or oxidation of the materials shown in this section, plus those from the base metal and coating, etc., as noted above. Monitor for the materials identified in the list within this section.

Fumes from the use of this product may contain complex oxides or compounds of the following elements and molecules: amorphous silica fume, beryllium, chromium, manganese and nickel. Other reasonably expected constituents of the fume would also include complex oxides of iron and silicon. Gaseous reaction products may include carbon monoxide and carbon dioxide. Ozone and nitrogen oxides may be formed by the radiation from the arc. Other conditions which also influence the composition and quantity of the fumes and gases to which workers may be exposed include: coatings on the metal being welded (such as paint, plating or galvanizing), the number of welders and the volume of the work area, the quality and amount of ventilation, the position of the welder's head with respect to the fume plume, as well as the presence of contaminants in the atmosphere (such as chlorinated hydrocarbon vapors from cleaning and degreasing activities). One recommended way to determine the composition and quantity of fumes and gases to which workers are exposed is to take an air sample inside the welder's helmet if worn or in the worker's breathing zone. See ANSI/AWS F1.1, available from the "American Welding Society", P.O. Box 351040, Miami, FL 33135. Also, from AWS is F1.3 "Evaluating Contaminants in the Welding Environment - A Sampling Strategy Guide", which gives additional advice on sampling.

SECTION 3 – HAZARDOUS INGREDIENTS

CONTENT PERCENTAGE BY INGREDIENTS

INGREDIENT	CAS	%WEIGHT	INGREDIENT	CAS	E	%WEIGHT
ALUMINUM	7429-90-5	80-99.7	MAGNESIUM	7439-95-4		0-6
BERYLLIUM	7440-41-7	<0.0003	MANGANESE	7439-96-5		0-2
CHROMIUM	7440-47-3	0-0.5	NICKEL	7440-02-0		0-0.05
COPPER	7440-50-8	0-0.5	SILICON	7440-21-3		0-14
IRON	7439-89-6	0-1	(Amorphous Silica Fume)	69012-64-2		

SECTION 4 – FIRST AID MEASURES

INHALATION: If breathing is difficult provide fresh air and contact physician.

EYE/SKIN INJURIES: For radiation burns, see physician.

Section 11 of this MSDS covers the acute effects of overexposure to the various ingredients within the welding consumable. Section 8 of this MSDS lists the exposure limits and covers methods for protecting yourself and your co-workers.

SECTION 5 - FIRE AND EXPLOSION HAZARD DATA

Welding consumables applicable to this sheet as shipped are nonreactive, nonflammable, nonexplosive and essentially nonhazardous until welded. Welding arcs and sparks can ignite combustibles and flammable products. Unused welding consumables may remain hot for a period of time after completion of a welding process. See American National Standard (ANSI) Z49.1 for further general safety information on the use and handling of welding consumables and associated procedures.

SECTION 6 - ACCIDENTAL RELEASE MEASURES

Solid objects can be picked up and placed into a container. Wear proper personal protective equipment while handling. Do not discard as general trash.

SECTION 7 - HANDLING AND STORAGE

HANDLING: No specific requirements in the form supplied. Handle with care to avoid cuts. Wear gloves when handling welding consumables. Avoid exposure to dust. Do not ingest. Some individuals can develop an allergic reaction to certain materials. Retain all warning and product labels.

STORAGE: Keep separate from acids and strong bases to prevent possible chemical reactions.

SECTION 8 - EXPOSURE CONTROL AND PERSONAL PROTECTION

Read and understand the instructions and the labels on the packaging. Welding fumes do not have a specific OSHA PEL or ACGIH TLV. The OSHA PEL for Particulate – Not Otherwise Classified (PNOC) is 5 mg/m^3 – Respirable Fraction, 15 mg/m^3 – Total Dust. The ACGIH TLV for Particles – Not Otherwise Specified (PNOS) is 3 mg/m^3 – Respirable Particles, 10 mg/m^3 – Inhalable Particles. The individual complex compounds within the fume may have a lower OSHA PEL or ACGIH TLV than the OSHA Particulate – Not Otherwise Classified (PNOC) and ACGIH Particles – Not Otherwise Specified (PNOS). An Industrial Hygienist, the OSHA Permissible Exposure Limits for Air Contaminants (29 CFR 1910.1000), and the ACGIH Threshold Limit Values should be consulted to determine the specific fume constituents present and their respective exposure limits. All exposure limits are in milligrams per cubic meter (mg/m^3).

INGREDIENT	CAS	OSHA PEL	ACGIH TLV
ALUMINUM###	7429-90-5	5 R* (Dust)	1 R* {A4}
BERYLLIUM	7440-41-7	0.002, 0.005 CL**	0.00005 {A1}
CHROMIUM#	7440-47-3	1 (Metal)	0.5 (Metal) {A4}
		0.5 (Cr II & Cr III Cpnds)	0.5 (Cr III Cpnds) {A4}
		0.005 (Cr VI Cpnds)	0.05 (Cr VI Sol Cpnds) {A1}
			0.01 (Cr VI Insol Cpnds) {A1}
COPPER	7440-50-8	0.1 (Fume), 1 (Dust)	0.2 (Fume), 1 (Dust)
IRON+	7439-89-6	5 R*	5 R* (Fe2O3) {A4}
MAGNESIUM+	7439-95-4	5 R*	3 R*
MANGANESE#	7439-96-5	5 CL** (Fume)	0.2 I* {A4} ♦
NICKEL#	7440-02-0	1 (Metal)	1.5 I* (Ele) {A5}
		1 (Insol Cpnds)	0.2 I* (Insol Cpnds) {A1}
SILICON+	7440-21-3	5 R*	3 R*
(Amorphous Silica Fume)	69012-64-2	0.8	3 R*

R* - Respirable Fraction R*** - Respirable Fraction - Short Term Exposure Limit I* - Inhalable Fraction I*** - Inhalable Fraction - Short Term Exposure Limit ** - Ceiling Limit *** - Short Term Exposure Limit + - As a nuisance particulate covered under "Particulates Not Otherwise Regulated" by OSHA or "Particulates Not Otherwise Classified" by ACGIH ++ - Crystalline silica is bound within the product as it exists in the package. However, research indicates silica is present in welding fume in the amorphous (noncrystalline) form #- Reportable material under Section 313 of SARA ### - Reportable material under Section 313 of SARA as dust or fume ■ - NIOSH REL TWA and STEL ♦ - Listed under ACGIH Notice of Intended Changes for Mn in 2010 ♦♦ - Limit of 0.02 mg/m^3 is proposed for Respirable Mn in 2011 by ACGIH Ele – Element Sol – Soluble Insol – Insoluble Inorg – Inorganic Cpnds – Compounds NOS – Not Otherwise Specified {A1} - Confirmed Human Carcinogen per ACGIH {A2} - Suspected Human Carcinogen per ACGIH {A3} - Confirmed Animal Carcinogen with Unknown Relevance to Humans per ACGIH {A4} - Not Classifiable as a Human Carcinogen per ACGIH {A5} - Not Suspected as a Human Carcinogen per ACGIH (noncrystalline) form

VENTILATION: Use enough ventilation, local exhaust at the arc or both to keep the fumes and gases below the PEL/TLV/OELs in the worker's breathing zone and the general area. Train the welder to keep his head out of the fumes.

RESPIRATORY PROTECTION: Use NIOSH approved or equivalent fume respirator or air supplied respirator when welding in confined space or where local exhaust or ventilation does not keep exposure below the regulatory limits.

EYE PROTECTION: Wear helmet or use face shield with filter lens. As a rule of thumb begin with Shade Number 14. Adjust if needed by selecting the next lighter and/or darker shade number. Provide protective screens and flash goggles, if necessary, to shield others from the weld arc flash.

PROTECTIVE CLOTHING: Wear hand, head and body protection which help to prevent injury from radiation, sparks and electrical shock. See ANSI Z49.1. At a minimum this includes welder's gloves and a protective face shield, and may include arm protectors, aprons, hats, shoulder protection as well as dark nonsynthetic clothing. Train the welder not to touch live electrical parts and to insulate himself from work and ground.

PROCEDURE FOR CLEANUP OF SPILLS OR LEAKS: Not applicable

SPECIAL PRECAUTIONS (IMPORTANT): Maintain exposure below the PEL/TLV/OEL. Use industrial hygiene monitoring to ensure that your use of this material does not create exposures which exceed PEL/TLV/OEL. Always use exhaust ventilation. Refer to the following sources for important additional information: American National Standard (ANSI) Z49.1; Safety in Welding and Cutting published by the American Welding Society, P.O. Box 351040, Miami, FL 33135 and OSHA Publication 2206 (29 CFR 1910), U.S. Government Printing Office, Washington, DC 20402.

SECTION 9 – PHYSICAL AND CHEMCIAL PROPERTIES

Welding consumables applicable to this sheet as shipped are nonreactive, nonflammable, nonexplosive and essentially nonhazardous until welded.

PHYSICAL STATE: Solid Wire

ODOR: N/A

COLOR: Silver / Gray

FORM: Round Wire

SECTION 10 – STABILITY AND REACTIVITY

GENERAL: Welding consumables applicable to this sheet are solid and nonvolatile as shipped. This product is only intended for use per the welding parameters it was designed for. When this product is used for welding, hazardous fumes may be created. Other factors to consider include the base metal, base metal preparation and base metal coatings. All of these factors can contribute to the fume and gases generated during welding. The amount of fume varies with the welding parameters.

STABILITY: This product is stable under normal conditions.

REACTIVITY: Contact with acids or strong bases may cause generation of gas.

SECTION 11 – TOXICOLOGICAL INFORMATION

SHORT-TERM (ACUTE) OVEREXPOSURE EFFECTS: Welding Fumes - May result in discomfort such as dizziness, nausea or dryness or irritation of nose, throat or eyes. **Aluminum Oxide** - Irritation of the respiratory system. **Beryllium** - Can cause irritant dermatitis, allergic contact dermatitis and skin granulomas. Inhalation of excessive levels of beryllium can result in acute pneumonitis (inflammation of the lung tissue). Beryllium can cause lung sensitization in susceptible individuals. **Chromium** - Inhalation of fume with chromium (VI) compounds can cause irritation of the respiratory tract, lung damage and asthma-like symptoms. Swallowing chromium (VI) salts can cause severe injury or

death. Dust on skin can form ulcers. Eyes may be burned by chromium (VI) compounds. Allergic reactions may occur in some people. **Copper** - Metal fume fever characterized by metallic taste, tightness of chest and fever. Symptoms may last 24 to 48 hours following overexposure. **Iron, Iron Oxide** - None are known. Treat as nuisance dust or fume. **Magnesium** - Overexposure to the oxide may cause metal fume fever characterized by metallic taste, tightness of chest and fever. Symptoms may last 24 to 48 hours following overexposure. **Manganese** - Metal fume fever characterized by chills, fever, upset stomach, vomiting, irritation of the throat and aching of body. Recovery is generally complete within 48 hours of the overexposure. **Nickel, Nickel Compounds** - Metallic taste, nausea, tightness in chest, metal fume fever, allergic reaction. **Silicon (Amorphous Silica Fume)** - Dust and fumes may cause irritation of the respiratory system, skin and eyes.

LONG-TERM (CHRONIC) OVEREXPOSURE EFFECTS: Welding Fumes - Excess levels may cause bronchial asthma, lung fibrosis, pneumoconiosis or "siderosis." **Aluminum Oxide** - Pulmonary fibrosis and emphysema. **Beryllium** - Chronic inhalation of dust and fumes by these susceptible individuals can result in a serious disease called Chronic Beryllium Disease (CBD). Often misdiagnosed as sarcoidosis, CBD is an allergic condition in which the lung tissues become inflamed. This inflammation sometimes accompanied with fibrosis (lung scarring), restricts the uptake of oxygen into the blood stream. CBD can, over time, be fatal. Beryllium is listed on the NTP and is known to be carcinogenic to humans. **Chromium** - Ulceration and perforation of nasal septum. Respiratory irritation may occur with symptoms resembling asthma. Studies have shown that chromate production workers exposed to hexavalent chromium compounds have an excess of lung cancers. Chromium (VI) compounds are more readily absorbed through the skin than chromium (III) compounds. Good practice requires the reduction of employee exposure to chromium (III) and (VI) compounds. **Copper** - Copper poisoning has been reported in the literature from exposure to high levels of copper. Liver damage can occur due to copper accumulating in the liver characterized by cell destruction and cirrhosis. High levels of copper may cause anemia and jaundice. High levels of copper may cause central nervous system damage characterized by nerve fiber separation and cerebral degeneration. **Iron, Iron Oxide Fumes** - Can cause siderosis (deposits of iron in lungs) which some researchers believe may affect pulmonary function. Lungs will clear in time when exposure to iron and its compounds ceases. Iron and magnetite (Fe_3O_4) are not regarded as fibrogenic materials. **Magnesium,**- No adverse long term health effects have been reported in the literature. **Manganese** - Long-term overexposure to manganese compounds may affect the central nervous system. Symptoms may be similar to Parkinson's disease and can include slowness, changes in handwriting, gait impairment, muscle spasms and cramps and less commonly, tremor and behavioral changes. Employees who are overexposed to manganese compounds should be seen by a physician for early detection of neurologic problems. Overexposure to manganese and manganese compounds above safe exposure limits can cause irreversible damage to the central nervous system, including the brain, symptoms of which may include slurred speech, lethargy, tremor, muscular weakness, psychological disturbances and spastic gait. **Nickel, Nickel Compounds** - Lung fibrosis or pneumoconiosis. Studies of nickel refinery workers indicated a higher incidence of lung and nasal cancers. **Silicon (Amorphous Silica Fume)** - Research indicates that silica is present in welding fume in the amorphous form. Long term overexposure may cause pneumoconiosis. Noncrystalline forms of silica (amorphous silica) are considered to have little fibrotic potential.

MEDICAL CONDITIONS AGGRAVATED BY EXPOSURE: Persons with pre-existing impaired lung functions (asthma-like conditions). Persons with a pacemaker should not go near welding and cutting operations until they have consulted their doctor and obtained information from the manufacturer of the device. Respirators are to be worn only after being medically cleared by your company-designated physician.

EMERGENCY AND FIRST AID PROCEDURES: Call for medical aid. Employ first aid techniques recommended by the American Red Cross. If irritation or flash burns develop after exposure, consult a physician.

CARCINOGENICITY: Beryllium, **c**hromium VI compounds and nickel compounds are classified as IARC Group 1 and NTP Group K carcinogens. Chromium VI compounds and welding fumes must be considered as carcinogens under OSHA (29 CFR 1910.1200).

CALIFORNIA PROPOSITION 65: WARNING: These products contain or produce a chemical known to the State of California to cause cancer and birth defects (or other reproductive harm). (California Health & Safety Code Section 25249.5 et seq.)

SECTION 12 – ECOLOGICAL INFORMATION

Welding processes can release fumes directly to the environment. Welding wire can degrade if left outside and unprotected. Residues from welding consumables and processes could degrade and accumulate in the soil and groundwater.

SECTION 13 – DISPOSAL CONSIDERATIONS

Use recycling procedures if available. Discard any product, residue, packaging, disposable container or liner in an environmentally acceptable manner, in full compliance with federal, state and local regulations.

SECTION 14 – TRANSPORT INFORMATION

No international regulations or restrictions are applicable. No special precautions are necessary.

SECTION 15 – REGULATORY INFORMATION

Read and understand the manufacturer's instructions, your employer's safety practices and the health and safety instructions on the label and the material safety data sheet. Observe all local and federal rules and regulations. Take all necessary precautions to protect yourself and others.

United States EPA Toxic Substance Control Act: All constituents of these products are on the TSCA inventory list or are excluded from listing.

CERCLA/SARA TITLE III: Reportable Quantities (RQs) and/or Threshold Planning Quantities (TPQs):

Ingredient name	**RQ(lb)**	**TPQ (lb)**
Products on this MSDS are a solid solution in the form of a solid article.	--	--

Spills or releases resulting in the loss of any ingredient at or above its RQ require immediate notification to the National Response Center and to your Local Emergency Planning Committee.

Section 311 Hazard Class
As shipped: Immediate In use: Immediate delayed

EPCRA/SARA TITLE III 313 TOXIC CHEMICALS: The following metallic components are listed as SARA 313 "Toxic Chemicals" and potentially subject to annual SARA 312 reporting: Beryllium, Chromium, Copper, Manganese and Nickel. See Section 3 for weight percentage.

CANADIAN WHMIS CLASSIFICATION: Class D; Division 2, Subdivision A

CANADIAN ENVIRONMENTAL PROTECTION ACT (CEPA): All constituents of these products are on the Domestic Substance List (DSL).

SECTION 16 – OTHER INFORMATION

Safety Data Sheet compliant with European Commission Directives 89/106/EEC and 91/155/EEC may be downloaded from www.hobartbrothers.com.

MERCURY STATEMENT: Mercury is not a normal contaminant in aluminum alloys and neither it nor any of its compounds are used in the manufacture of this product

For additional information please refer to the following sources:

USA: **American National Standard (ANSI) Z49.1** "Safety in Welding and Cutting", **ANSI/American Welding Society (AWS) F1.5** "Methods for Sampling and Analyzing Gases from Welding and Allied Processes", **ANSI/AWS F1.1** "Method for Sampling Airborne Particles Generated by Welding and Allied Processes", **AWSF3.2M/F3.2** "Ventilation Guide for Weld Fume", American Welding Society, 550 North Le Jeune Road, Miami, Florida, 33135. Safety and Health Fact Sheets available from AWS at www.aws.org. **OSHA Publication 2206 (29 C.F.R. 1910),** U.S. Government Printing Office, Superintendent of Documents, P.O. Box 371954, Pittsburgh, PA 15250-7954. **Threshold Limit Values and Biological Exposure Indices**, American Conference of Governmental Hygienists (ACGIH), 6500 Glenway Ave., Cincinnati, Ohio 45211, USA. **NFPA 51B** "Standard for Fire Prevention During Welding, Cutting and Other Hot Work" published by the National Fire Protection Association, 1 Batterymarch Park, Quincy, MA 02169.

Canada: **CSA Standard CAN/CSA-W117.2-01** "Safety in Welding, Cutting and Allied Processes".

HOBART BROTHERS ALUMINUM strongly recommends the users of this product study this MSDS, the product label information and become aware of all hazards associated with welding. HOBART BROTHERS ALUMINUM believes this data to be accurate and to reflect qualified expert opinion regarding current research. However, HOBART BROTHERS ALUMINUM cannot make any expressed or implied warranty as to this information.

Avesta Welding

Material safety data sheet — Stainless steel welding wire

Date of issue: Feb 2007 (Issue 2: Rev 4)
In accordance with: Commission Directive 93/112/EEC and Statutory Instrument 1994 No 3247
Document: Avesta Welding MSDS TE17-07

1. IDENTIFICATION OF PREPARATION AND COMPANY

Product identifier: Avesta Stainless Steel Welding Wire
Manufacturer/Supplier: Avesta Welding, P O Box 501, SE-774 27 AVESTA, SWEDEN
Telephone number: +46 226 85700
Application and use: Gas Metal Arc Welding
Gas Tungsten Arc Welding
Submerged Arc Welding
Plasma Arc Welding
Laser Welding

Trade names:

Avesta Welding	Type, EN 12072
248 SV	Martensitic/Ferritic
308L-Si/MVR-Si, 308L/MVR, 308H, 347-Si/MVNb-Si, 347/MVNb 316L-Si/SKR-Si, 316L/SKR, 318-Si/SKNb-Si, 318/SKNb, 317L/SNR	Austenitic
2304, 2205, 2507/P100, LDX 2101	Austenitic-Ferritic
254 SFER, 904L, P54	Fully Austenitic
307-Si, 309L-Si, 309L, P5, P7	Special types
310, 253 MA, 353 MA	Heat resisting

2. INFORMATION OF INGREDIENTS

This product is a solid stainless wire.

Wire composition:

	Weight, % (max)	Cas No.	Danger symbol	R-phrase	TLV (mg/m)
Si	1	7440-21-3	-	N.A.	-
Mn	10	7439-96-5	-	N.A.	0.05
Cr	30	7440-47-3	-	N.A.	0.5
Ni	36	7440-02-0	X_n	R40/R43	0.5
Mo	5	7439-98-7	-	N.A.	5
Nb	2	7440-03-1	-	N.A.	-
Cu	2	7440-50-8	-	N.A.	-
Fe	Bal	7439-89-6	-	N.A.	0.05

*) Threshold Limit Values acc. to ACGIH "hazard classification OJEC L314".

3. HAZARDS IDENTIFICATION

When these products are used in a welding process the following hazards are the most important.
Heat: Spatter, melting metals and arc rays can cause burn injuries and start fires.
Radiation: Arc rays can severely damage eyes or skin.
Shock: Electrical shock can kill.
Fumes: Chronic overexposure to welding fumes may affect pulmonary functions.

4. FIRST AID MEASURES

General: Move to fresh air and call for medical aid.
Inhalation: If breathing is difficult, provide fresh air and call physician.
Eye contact: For radiation burns due to arc flash, seek medical attention.
Skin contact: For skin burns from arc radiation, seek medical attention.

5. FIRE-FIGHTING MEASURES

No specific for welding consumables.

6. ACCIDENTAL RELEASE MEASURES

Personal precautions: chapter 8.
Environmental precaution: chapters 12 and 13.
Methods for cleaning: chapter 13.

7. HANDLING AND STORAGE

Handling: Do not ingest. Handle with care to avoid stings and cuts.
Storage: Store in original packaging. Keep separate from chemical substances like acids which could cause chemical reactions.

8. EXPOSURE CONTROLS/PERSONAL PROTECTION

Engineering measures: Ensure sufficient ventilation and exhaust at the arc, to keep the welding fumes and gases away from welder's breathing zone. Keep working place and protective clothing clean and dry. Train welder to avoid contact with live electrical parts and insulate conductive parts. Check condition of protective clothing and equipment on a regular basis.
Personal protective equipment: Use respirator or air supplied respirator when welding in a confined space. Wear hand, head, eyes and body protection like welder's gloves, helmet or face shield with filter lens, safety boots, apron, arm and shoulder protection. Keep protective clothing clean and dry.

9. PHYSICAL AND CHEMICAL PROPERTIES

Appearance: Solid, non-volatile.
Odour: Odourless.
Colour: Greyish.
Solubility in water: Insoluble

10. STABILITY AND REACTIVITY

General: This product is intended for normal welding purposes.
Stability: Stable under normal conditions.
Reactivity: May react in contact with strong acids to release gaseous acid decomposition products. Fume is produced during welding. Expected fume constituents include oxides of metal as iron, manganese, nickel and chromium. Expected gaseous products would include carbon oxides, nitrogen oxides and ozone. Contamination, dirt, surface protections, paint or primer on the base material can affect the composition of the fumes.

11. TOXICOLOGICAL INFORMATION

General: Inhalation of welding fumes, dust and gases can be dangerous to your health. Classification of welding fumes is difficult because of varying base materials, coatings, air contamination and processes.
Acute toxicity: Overexposure to welding fumes and dust may result in symptoms like dizziness, nausea, dryness or irritation of the nose, throat or eyes.
Chronic toxicity: Overexposure to welding fumes and dust may affect pulmonary function. Welding fumes and dust may contain chromium and nickel compounds, e.g. Cr^{6+}, which are suspected of being cancer causing agents.
Dermatological toxicity: Nickel is classified as a skin sensitiser. Can cause skin sensitisation in susceptible individuals through prolonged contact with the skin.

12. ECOLOGICAL INFORMATION

Welding consumables and materials could degrade into components originating from the consumables or from the materials used in the welding process.

13. DISPOSAL CONSIDERATIONS

Surplus and scrap (waste) are valuable commodities that can be reused. Products, surplus and packaging should, if possible, be recycled or discarded in full compliance with federal and local regulations

14. TRANSPORT INFORMATION

No international regulations or restrictions are applicable.

15. REGULARITY INFORMATION

Products with nickel equal to or exceeding 1% are classified, but are not required to be labelled by virtue of their massive non-hazardous form - preventing inhalation, ingestion and prolonged, continuous contact.

Classification of Nickel	
Risk phrases	R40: Limitedevidence of a carcinogenic effect R43:May cause sensitisation by skin contacts
Safety phrases	S23: Do not breathe fumes S36/37/39: Wear protective clothing S51: Use only well ventilated areas

Warning text on label:

WARNING: Fumes and gases can be hazardous to your health. Arc rays can injure your eyes and burn skin. Electric shock can kill. Read and understand the manu-facturer's instructions and your employer's safety prac-tices. Keep your head out of the fumes. Use enough ventilation, exhaust at the arc, or both, to keep fumes and gases from your breathing zone and the general area. Wear correct eye, ear and body protection. Do not touch live electrical parts.

This product contains or produces a chemical known to the State of California to cause cancer and/or birth defects (or other reproductive harm). (California Health and Safety Code § 25249.5 et seq.)

WARNUNG: Schützen Sie sich und andere. Lesen und beachten Sie diese Einweise. Rauch und Gase können Ihre Gesundheit gefährden. Lichtbogenstrahlung kann Ihre Augen verletzen und Ihre Haut verbrennen. Lesen und beachten Sie die Hinweise des Herstellers und die Sicherheitsanweisungen Ihres Arbeitsgebers. Sorgen Sie für ausreichende Belüftung und Absaugung an der Schweisstelle, um Rauch und Gase von Ihrem Atem- und Arbeitsbereich fernzuhalten. Tragen Sie einen ausreichenden Augen-, Ohren- und Körperschutz. Berühren Sie keine aktiven elektrischen Teile. Beachten Sie verfügbare nationale Veröffentlichungen mit Sicherheitsempfehlungen.

VARNING: Iakttag försiktighet vid svetsning. Observera arbetsgivarens säkerhetsföreskrifter, vilka ska överens-stämma med svensk lag och vara baserade på uppgifter från leverantören.

VÄLTÄ HITSAUSSAVUJEN SISÄÄNHENGITTÄMISTÄ: Pitkäaikainen altistus voi olla haitallista. Huolehdi tuuletuksesta. Katso hitsauslisäaineen turvaohjelehteä.

WAARSCHUWING: Neem uw voorzorgen bij het lassen, ventileer de gebruiksruimte. Raadpleeg de veiligheids-voorschriften van uw werkgever die moeten overeen-stemmen met de nationale wetten/reglementen en die moeten gebaseerd zijn op de gegevens beschikbaar bij uwleverancier.

ADVERTENCIA: Utilizar sistemas de extracción de aire. Los humos y los gases pueden ser peligrosos para la salud. Leer con atención las instrucciones y utilizar los elementos de protección adecuados.

AVERTISSEMENT : Utiliser une ventilation. Les fumées et les gaz peuvent tre dangereux pour votre sant. Lire et suivre les instructions du fabricant et les règles de scuritde votre employeur.

ATTENZIONE: Durante l_impiego assicurarsi che la zona di lavoro, sia sufficientemente aerate. Fumi e gas possono essere nocivi per la salute. Leggere attentamente le istruzioni del produttore e attenersi alle disposizioni di sicurezza del vostro datore di lavoro.

16. OTHER INFORMATION

We refer to:

USA: American National Standard Z49, 1 "Safety in Welding and Cutting", American Welding Society, 550 North Le Jeune Road, Miami, Florida, 33135; OSHA Safety and Health Standards, 29CFR 1910, U.S. Gov. Printing Office, Washington, D.C. 20402; American Conference of Governmental Hygienists (ACGIH), Threshold Limit Values and Biological Exposure Indices, 6500 Glenway Ave., Cincinnati, Ohio 45211, USA

UK: WMA Publication 236 and 237. "Hazards from Welding fume", "The arc welder at work, some general aspects of health and safety".

Germany: Unfallverhütungsvorschrift "Schweißen, Schneiden und verwandte Verfahren" (VBG 15)

Avesta Welding requests the users of this product to study this Safety Data Sheet and become aware of product hazards and safety information. The information given in this safety data sheet is based on the present level of our knowledge and experience. The data sheet describes the products with respect to safety requirements. The data given is not intended as a confirmation of product properties and does not constitute a legal contractual relationship, nor should it be used as basis for ordering these products.

SAFETY DATA SHEET

1. PRODUCT AND COMPANY IDENTIFICATION

Product Name: Blue Max® MIG 308LSi
Product Size: 0.035 in

Other means of identification

SDS number: 200000000207

Recommended use and restriction on use

Recommended use: GMAW (Gas Metal Arc Welding)
Restrictions on use: Not known. Read this SDS before using this product.

Manufacturer/Importer/Supplier/Distributor Information

Manufacturer/Supplier:
The Lincoln Electric Company
22801 Saint Clair Avenue
Cleveland, Ohio 44117 USA
Phone: +1 (216) 481-8100

The Lincoln Electric Company of Canada LP
179 Wicksteed Avenue
Toronto, Ontario M4G 2B9 CANADA
Phone: +1 (416) 421-2600

Safety Data Sheet Questions: www.lincolnelectric.com/sds

Arc Welding Safety Information: www.lincolnelectric.com/safety

24-Hour Emergency Response Telephone Numbers:

Area	Telephone
USA/Canada/Mexico	+1 (888) 609-1762
Americas/Europe	+1 (216) 383-8962
Asia Pacific	+1 (216) 383-8966
Middle East/Africa	+1 (216) 383-8969

3E Company Access Code: 333988

2. HAZARDS IDENTIFICATION

Classified according to the criteria of the Globally Harmonized System of Classification and Labeling of Chemicals (GHS), OSHA Hazard Communication Standard (29 CFR 1910.1200) and the Canadian Controlled Products Regulations.

Hazard Classification Not classified as hazardous according to applicable GHS hazard classification criteria.

Label Elements

Hazard Symbol: No symbol

Signal Word: No signal word.

Hazard Statement not applicable

Precautionary Statement not applicable

Other hazards which do not result in GHS classification: Electrical Shock can kill. If welding must be performed in damp locations or with wet clothing, on metal structures or when in cramped positions such as sitting, kneeling or lying, or if there is a high risk of unavoidable or accidental contact with work piece, use the following equipment: Semiautomatic DC Welder, DC Manual (Stick) Welder, or AC Welder with Reduced Voltage Control.

Arc rays can injure eyes and burn skin. Welding arc and sparks can ignite combustibles and flammable materials. Overexposure to welding fumes and gases can be hazardous. Read and understand the manufacturer's instructions, Safety Data Sheets and the precautionary labels before using this product. Refer to Section 8.

Substance(s) formed under the conditions of use: The welding fume produced from this welding electrode may contain the following constituent(s) and/or their complex metallic oxides as well as solid particles or other constituents from the consumables, base metal, or base metal coating not listed below:

Chemical Identity	CAS-No.
Carbon dioxide	124-38-9
Carbon monoxide	630-08-0
Nitrogen dioxide	10102-44-0
Ozone	10028-15-6
Manganese	7439-96-5
Chromium (VI)	18540-29-9
Nickel	7440-02-0
Chromium oxide	1308-38-9

3. COMPOSITION / INFORMATION ON INGREDIENTS

Reportable Hazardous Ingredients

Chemical Identity	CAS number	Content in percent (%)*
Iron	7439-89-6	60 - 100%
Chromium and chromium alloys or compounds (as Cr)	7440-47-3	15 - 40%
Nickel	7440-02-0	10 - 30%
Manganese	7439-96-5	1 - 5%
Silicon	7440-21-3	0.5 - 1.5%
Molybdenum	7439-98-7	0.1 - 1%
Copper and/or copper alloys and compounds (as Cu)	7440-50-8	0.1 - 1%
Cobalt and compounds (as Co)	7440-48-4	0.1 - 1%

* All concentrations are percent by weight unless ingredient is a gas. Gas concentrations are in percent by volume.

Composition Comments: The term "Hazardous Ingredients" should be interpreted as a term defined in Hazard Communication standards and does not necessarily imply the existence of a welding hazard. The product may contain additional non-hazardous ingredients or may form additional compounds under the condition of use. Refer to Sections 2 and 8 for more information.

4. FIRST AID MEASURES

Ingestion: Unlikely due to form of product, except for granular materials. Avoid hand, clothing, food, and drink contact with metal fume or powder which can cause ingestion of particulate during hand to mouth activities such as drinking, eating, smoking, etc. If ingested, do not induce vomiting. Contact a poison control center. Unless the poison control center advises otherwise, wash out mouth thoroughly with water. If symptoms develop, seek medical attention at once.

Inhalation: Move to fresh air if breathing is difficult. If breathing has stopped, perform artificial respiration and obtain medical assistance at once.

Skin Contact: Remove contaminated clothing and wash the skin thoroughly with soap and water. For reddened or blistered skin, or thermal burns, obtain medical assistance at once.

Eye contact: Dust or fume from this product should be flushed from the eyes with copious amounts of clean, tepid water until transported to an emergency medical facility. Do not allow victim to rub or keep eyes tightly closed. Obtain medical assistance at once.

Arc rays can injure eyes. If exposed to arc rays, move victim to dark room, remove contact lenses as necessary for treatment, cover eyes with a padded dressing and rest. Obtain medical assistance if symptoms persist.

Most important symptoms/effects, acute and delayed

Symptoms: Short-term (acute) overexposure to welding fumes may result in discomfort such as metal fume fever, dizziness, nausea, or dryness or irritation of nose, throat, or eyes. May aggravate pre-existing respiratory problems (e.g. asthma, emphysema).

Long-term (chronic) overexposure to welding fumes can lead to siderosis (iron deposits in lung), central nervous system effects, bronchitis and other pulmonary effects. Refer to Section 11 for more information.

Hazards: Welding hazards are complex and may include physical and health hazards such as but not limited to electric shock, physical strains, radiation burns (eye flash), thermal burns due to hot metal or spatter and potential health effects of overexposure to welding fume or dust. Refer to Section 11 for more information.

Indication of immediate medical attention and special treatment needed

Treatment: Treat symptomatically.

5. FIRE-FIGHTING MEASURES

General Fire Hazards: As shipped, this product is nonflammable. However, welding arc and sparks can ignite combustibles and flammable products. Read and understand American National Standard Z49.1, "Safety In Welding, Cutting and Allied Processes" and National Fire Protection Association NFPA 51B, "Standard for Fire Prevention During Welding, Cutting and Other Hot Work" before using this product.

Suitable (and unsuitable) extinguishing media

Suitable extinguishing media: As shipped, the product will not burn. In case of fire in the surroundings: use appropriate extinguishing agent.

Unsuitable extinguishing media:	None known.
Specific hazards arising from the chemical:	Welding arc and sparks can ignite combustibles and flammable products.

Special protective equipment and precautions for firefighters

Special fire fighting procedures:	Use standard firefighting procedures and consider the hazards of other involved materials.
Special protective equipment for fire-fighters:	Selection of respiratory protection for fire fighting: follow the general fire precautions indicated in the workplace. Self-contained breathing apparatus and full protective clothing must be worn in case of fire.

6. ACCIDENTAL RELEASE MEASURES

Personal precautions, protective equipment and emergency procedures	If airborne dust and/or fume is present, use adequate engineering controls and, if needed, personal protection to prevent overexposure. Refer to recommendations in Section 8.
Methods and material for containment and cleaning up	Clean up spills immediately, observing precautions in the personal protective equipment in Section 8. Avoid generating dust. Prevent product from entering any drains, sewers or water sources. Refer to Section 13 for proper disposal.
Environmental Precautions:	Avoid release to the environment. Prevent further leakage or spillage if safe to do so.

7. HANDLING AND STORAGE

Precautions for safe handling:	Keep formation of airborne dusts to a minimum. Provide appropriate exhaust ventilation at places where dust is formed. Read and understand the manufacturer's instruction and the precautionary label on the product. Refer to Lincoln Safety Publications at www.lincolnelectric.com/safety. See American National Standard Z49.1, "Safety In Welding, Cutting and Allied Processes" published by the American Welding Society, http://pubs.aws.org and OSHA Publication 2206 (29CFR1910), U.S. Government Printing Office, www.gpo.gov.
Conditions for safe storage, including any incompatibilities:	Store in closed original container in a dry place. Store away from incompatible materials. Store in accordance with local/regional/national regulations.

8. EXPOSURE CONTROLS / PERSONAL PROTECTION

Control Parameters

Occupational Exposure Limits: US

Chemical Identity	type	Exposure Limit Values	Source
Chromium and chromium alloys or compounds (as Cr) - as Cr	TWA	0.5 mg/m3	US. ACGIH Threshold Limit Values (12 2010)
	PEL	1 mg/m3	US. OSHA Table Z-1 Limits for Air Contaminants (29 CFR 1910.1000) (02 2006)
	REL	0.5 mg/m3	US. NIOSH: Pocket Guide to Chemical Hazards (2005)
Nickel - Inhalable fraction.	TWA	1.5 mg/m3	US. ACGIH Threshold Limit Values (12 2010)
Nickel - as Ni	PEL	1 mg/m3	US. OSHA Table Z-1 Limits for Air Contaminants (29 CFR 1910.1000) (02 2006)
	REL	0.015 mg/m3	US. NIOSH: Pocket Guide to Chemical Hazards (2005)
Manganese - Fume. - as Mn	Ceiling	5 mg/m3	US. OSHA Table Z-1 Limits for Air Contaminants (29 CFR 1910.1000) (02 2006)
	REL	1 mg/m3	US. NIOSH: Pocket Guide to Chemical Hazards (2005)
	STEL	3 mg/m3	US. NIOSH: Pocket Guide to Chemical Hazards (2005)
Manganese - Inhalable fraction. - as Mn	TWA	0.1 mg/m3	US. ACGIH Threshold Limit Values (03 2014)
Manganese - Respirable fraction. - as Mn	TWA	0.02 mg/m3	US. ACGIH Threshold Limit Values (03 2014)
Silicon - Total dust.	PEL	15 mg/m3	US. OSHA Table Z-1 Limits for Air Contaminants (29 CFR 1910.1000) (02 2006)
Silicon - Respirable fraction.	PEL	5 mg/m3	US. OSHA Table Z-1 Limits for Air Contaminants (29 CFR 1910.1000) (02 2006)
Silicon - Respirable.	REL	5 mg/m3	US. NIOSH: Pocket Guide to Chemical Hazards (2005)
Silicon - Total	REL	10 mg/m3	US. NIOSH: Pocket Guide to Chemical Hazards (2005)
Molybdenum - Total dust. - as Mo	PEL	15 mg/m3	US. OSHA Table Z-1 Limits for Air Contaminants (29 CFR 1910.1000) (02 2006)
Molybdenum - Inhalable fraction. - as Mo	TWA	10 mg/m3	US. ACGIH Threshold Limit Values (03 2014)
Molybdenum - Respirable fraction. - as Mo	TWA	3 mg/m3	US. ACGIH Threshold Limit Values (03 2014)
Copper and/or copper alloys and compounds (as Cu) - Fume. - as Cu	PEL	0.1 mg/m3	US. OSHA Table Z-1 Limits for Air Contaminants (29 CFR 1910.1000) (02 2006)
Copper and/or copper alloys and compounds (as Cu) - Dust and mist. - as Cu	PEL	1 mg/m3	US. OSHA Table Z-1 Limits for Air Contaminants (29 CFR 1910.1000) (02 2006)
	REL	1 mg/m3	US. NIOSH: Pocket Guide to Chemical Hazards (2005)
	TWA	1 mg/m3	US. ACGIH Threshold Limit Values (03 2014)
Copper and/or copper alloys and compounds (as Cu) - Fume. - as Cu	TWA	0.2 mg/m3	US. ACGIH Threshold Limit Values (03 2014)
Cobalt and compounds (as Co) - as Co	TWA	0.02 mg/m3	US. ACGIH Threshold Limit Values (12 2010)
Cobalt and compounds (as Co) - Dust and fume. - as Co	REL	0.05 mg/m3	US. NIOSH: Pocket Guide to Chemical Hazards (2005)
	PEL	0.1 mg/m3	US. OSHA Table Z-1 Limits for Air Contaminants (29 CFR 1910.1000) (02 2006)

Occupational Exposure Limits: CANADA

Chemical Identity	type	Exposure Limit Values	Source
Chromium and chromium alloys or compounds (as Cr) - as Cr	TWA	0.5 mg/m3	Canada. Alberta OELs (Occupational Health & Safety Code, Schedule 1, Table 2) (07 2009)
Chromium and chromium alloys or compounds (as Cr)	TWA	0.5 mg/m3	Canada. British Columbia OELs. (Occupational Exposure Limits for Chemical Substances, Occupational Health and Safety Regulation 296/97, as amended) (07 2007)
Chromium and chromium alloys or compounds (as Cr) - as Cr	TWA	0.5 mg/m3	Canada. Manitoba OELs (Reg. 217/2006, The Workplace Safety And Health Act) (03 2011)
	TWAEV	0.5 mg/m3	Canada. Ontario OELs. (Control of Exposure to Biological or Chemical Agents) (11 2010)
	8 HR ACL	0.5 mg/m3	Canada. Saskatchewan OELs (Occupational Health and Safety Regulations, 1996, Table 21) (05 2009)
	15 MIN ACL	1.5 mg/m3	Canada. Saskatchewan OELs (Occupational Health and Safety Regulations, 1996, Table 21) (05 2009)
Chromium and chromium alloys or compounds (as Cr)	TWA	0.5 mg/m3	Canada. Quebec OELs. (Ministry of Labor - Regulation Respecting the Quality of the Work Environment) (12 2008)
Nickel	TWA	1.5 mg/m3	Canada. Alberta OELs (Occupational Health & Safety Code, Schedule 1, Table 2) (07 2009)
	TWA	0.05 mg/m3	Canada. British Columbia OELs. (Occupational Exposure Limits for Chemical Substances, Occupational Health and Safety Regulation 296/97, as amended) (05 2013)
Nickel - Inhalable fraction.	TWA	1.5 mg/m3	Canada. Manitoba OELs (Reg. 217/2006, The Workplace Safety And Health Act) (03 2011)
Nickel - Inhalable - as Ni	TWAEV	1 mg/m3	Canada. Ontario OELs. (Control of Exposure to Biological or Chemical Agents) (11 2010)
Nickel - Inhalable fraction. - as Ni	8 HR ACL	1.5 mg/m3	Canada. Saskatchewan OELs (Occupational Health and Safety Regulations, 1996, Table 21) (05 2009)
	15 MIN ACL	3 mg/m3	Canada. Saskatchewan OELs (Occupational Health and Safety Regulations, 1996, Table 21) (05 2009)
Nickel	TWA	1 mg/m3	Canada. Quebec OELs. (Ministry of Labor - Regulation Respecting the Quality of the Work Environment) (12 2008)
Manganese - as Mn	TWA	0.2 mg/m3	Canada. Alberta OELs (Occupational Health & Safety Code, Schedule 1, Table 2) (07 2009)
	TWA	0.2 mg/m3	Canada. British Columbia OELs. (Occupational Exposure Limits for Chemical Substances, Occupational Health and Safety Regulation 296/97, as amended) (07 2007)
	TWAEV	0.2 mg/m3	Canada. Ontario OELs. (Control of Exposure to Biological or Chemical Agents) (11 2010)
	8 HR ACL	0.2 mg/m3	Canada. Saskatchewan OELs (Occupational Health and Safety Regulations, 1996, Table 21) (05 2009)
	15 MIN ACL	0.6 mg/m3	Canada. Saskatchewan OELs (Occupational Health and Safety Regulations, 1996, Table 21) (05 2009)
Manganese - Fume. - as Mn	TWA	1 mg/m3	Canada. Quebec OELs. (Ministry of Labor - Regulation Respecting the Quality of the Work Environment) (12 2008)
Manganese - Dust. - as Mn	TWA	5 mg/m3	Canada. Quebec OELs. (Ministry of Labor - Regulation Respecting the Quality of the Work Environment) (12 2008)
Manganese - Fume. - as Mn	STEL	3 mg/m3	Canada. Quebec OELs. (Ministry of Labor - Regulation Respecting the Quality of the

			Work Environment) (12 2008)
Manganese - Respirable fraction. - as Mn	TWA	0.02 mg/m3	Canada. Manitoba OELs (Reg. 217/2006, The Workplace Safety And Health Act) (03 2014)
Manganese - Inhalable fraction. - as Mn	TWA	0.1 mg/m3	Canada. Manitoba OELs (Reg. 217/2006, The Workplace Safety And Health Act) (03 2014)
Silicon - Total dust.	TWAEV	10 mg/m3	Canada. Ontario OELs. (Control of Exposure to Biological or Chemical Agents) (07 2010)
Silicon	8 HR ACL	10 mg/m3	Canada. Saskatchewan OELs (Occupational Health and Safety Regulations, 1996, Table 21) (05 2009)
	15 MIN ACL	20 mg/m3	Canada. Saskatchewan OELs (Occupational Health and Safety Regulations, 1996, Table 21) (05 2009)
Silicon - Total dust.	TWA	10 mg/m3	Canada. Quebec OELs. (Ministry of Labor - Regulation Respecting the Quality of the Work Environment) (12 2008)
Molybdenum - Inhalable	TWA	10 mg/m3	Canada. British Columbia OELs. (Occupational Exposure Limits for Chemical Substances, Occupational Health and Safety Regulation 296/97, as amended) (07 2007)
Molybdenum - Respirable.	TWA	3 mg/m3	Canada. British Columbia OELs. (Occupational Exposure Limits for Chemical Substances, Occupational Health and Safety Regulation 296/97, as amended) (07 2007)
Molybdenum - Inhalable fraction. - as Mo	TWAEV	10 mg/m3	Canada. Ontario OELs. (Control of Exposure to Biological or Chemical Agents) (11 2010)
	8 HR ACL	10 mg/m3	Canada. Saskatchewan OELs (Occupational Health and Safety Regulations, 1996, Table 21) (05 2009)
Molybdenum - Respirable fraction. - as Mo	8 HR ACL	3 mg/m3	Canada. Saskatchewan OELs (Occupational Health and Safety Regulations, 1996, Table 21) (05 2009)
Molybdenum - Inhalable fraction. - as Mo	15 MIN ACL	20 mg/m3	Canada. Saskatchewan OELs (Occupational Health and Safety Regulations, 1996, Table 21) (05 2009)
Molybdenum - Respirable fraction. - as Mo	15 MIN ACL	6 mg/m3	Canada. Saskatchewan OELs (Occupational Health and Safety Regulations, 1996, Table 21) (05 2009)
Molybdenum - as Mo	TWA	10 mg/m3	Canada. Quebec OELs. (Ministry of Labor - Regulation Respecting the Quality of the Work Environment) (12 2008)
Molybdenum - Respirable fraction. - as Mo	TWA	3 mg/m3	Canada. Manitoba OELs (Reg. 217/2006, The Workplace Safety And Health Act) (03 2014)
Molybdenum - Inhalable fraction. - as Mo	TWA	10 mg/m3	Canada. Manitoba OELs (Reg. 217/2006, The Workplace Safety And Health Act) (03 2014)
Copper and/or copper alloys and compounds (as Cu) - Fume.	TWA	0.2 mg/m3	Canada. Alberta OELs (Occupational Health & Safety Code, Schedule 1, Table 2) (07 2009)
Copper and/or copper alloys and compounds (as Cu) - Dust and mist. - as Cu	TWA	1 mg/m3	Canada. Alberta OELs (Occupational Health & Safety Code, Schedule 1, Table 2) (07 2009)
Copper and/or copper alloys and compounds (as Cu) - Fume. - as Cu	TWA	0.2 mg/m3	Canada. British Columbia OELs. (Occupational Exposure Limits for Chemical Substances, Occupational Health and Safety Regulation 296/97, as amended) (07 2007)
Copper and/or copper alloys and compounds (as Cu) - Dust and mist. - as Cu	TWA	1 mg/m3	Canada. British Columbia OELs. (Occupational Exposure Limits for Chemical Substances, Occupational Health and Safety Regulation 296/97, as amended) (07 2007)
Copper and/or copper alloys and compounds (as Cu) - Fume.	TWAEV	0.2 mg/m3	Canada. Ontario OELs. (Control of Exposure to Biological or Chemical Agents) (11 2010)
Copper and/or copper alloys and compounds (as Cu) -	8 HR ACL	1 mg/m3	Canada. Saskatchewan OELs (Occupational Health and Safety

Dust and mist. - as Cu			Regulations, 1996, Table 21) (05 2009)
Copper and/or copper alloys and compounds (as Cu) - Fume. - as Cu	15 MIN ACL	0.6 mg/m3	Canada. Saskatchewan OELs (Occupational Health and Safety Regulations, 1996, Table 21) (05 2009)
Copper and/or copper alloys and compounds (as Cu) - Dust and mist. - as Cu	15 MIN ACL	3 mg/m3	Canada. Saskatchewan OELs (Occupational Health and Safety Regulations, 1996, Table 21) (05 2009)
Copper and/or copper alloys and compounds (as Cu) - Fume. - as Cu	8 HR ACL	0.2 mg/m3	Canada. Saskatchewan OELs (Occupational Health and Safety Regulations, 1996, Table 21) (05 2009)
	TWA	0.2 mg/m3	Canada. Quebec OELs. (Ministry of Labor - Regulation Respecting the Quality of the Work Environment) (12 2008)
Copper and/or copper alloys and compounds (as Cu) - Dust and mist. - as Cu	TWA	1 mg/m3	Canada. Quebec OELs. (Ministry of Labor - Regulation Respecting the Quality of the Work Environment) (12 2008)
	TWA	1 mg/m3	Canada. Manitoba OELs (Reg. 217/2006, The Workplace Safety And Health Act) (03 2014)
Copper and/or copper alloys and compounds (as Cu) - Fume. - as Cu	TWA	0.2 mg/m3	Canada. Manitoba OELs (Reg. 217/2006, The Workplace Safety And Health Act) (03 2014)
Cobalt and compounds (as Co) - as Co	TWA	0.02 mg/m3	Canada. Alberta OELs (Occupational Health & Safety Code, Schedule 1, Table 2) (07 2009)
	TWA	0.02 mg/m3	Canada. British Columbia OELs. (Occupational Exposure Limits for Chemical Substances, Occupational Health and Safety Regulation 296/97, as amended) (07 2007)
	TWA	0.02 mg/m3	Canada. Manitoba OELs (Reg. 217/2006, The Workplace Safety And Health Act) (03 2011)
	TWAEV	0.02 mg/m3	Canada. Ontario OELs. (Control of Exposure to Biological or Chemical Agents) (11 2010)
	8 HR ACL	0.02 mg/m3	Canada. Saskatchewan OELs (Occupational Health and Safety Regulations, 1996, Table 21) (05 2009)
	15 MIN ACL	0.06 mg/m3	Canada. Saskatchewan OELs (Occupational Health and Safety Regulations, 1996, Table 21) (05 2009)
	TWA	0.02 mg/m3	Canada. Quebec OELs. (Ministry of Labor - Regulation Respecting the Quality of the Work Environment) (12 2008)

Occupational Exposure Limits: MEXICO

Chemical Identity	type	Exposure Limit Values	Source
Chromium and chromium alloys or compounds (as Cr)	CPT	0.5 mg/m3	Mexico. Occupational Exposure Limit Values (03 2000)
Nickel	CPT	1 mg/m3	Mexico. Occupational Exposure Limit Values (03 2000)
Manganese - as Mn	CPT	0.2 mg/m3	Mexico. Occupational Exposure Limit Values (03 2000)
Manganese - Fume. - as Mn	CPT	1 mg/m3	Mexico. Occupational Exposure Limit Values (03 2000)
	CTT	3 mg/m3	Mexico. Occupational Exposure Limit Values (03 2000)
Silicon	CPT	10 mg/m3	Mexico. Occupational Exposure Limit Values (03 2000)
	CTT	20 mg/m3	Mexico. Occupational Exposure Limit Values (03 2000)
Molybdenum - as Mo	CPT	10 mg/m3	Mexico. Occupational Exposure Limit Values (03 2000)
	CTT	20 mg/m3	Mexico. Occupational Exposure Limit Values (03 2000)
Copper and/or copper alloys and compounds (as Cu) - Dust and mist. - as Cu	CTT	2 mg/m3	Mexico. Occupational Exposure Limit Values (03 2000)
Copper and/or copper alloys and compounds (as Cu) -	CTT	2 mg/m3	Mexico. Occupational Exposure Limit Values (03 2000)

Fume. - as Cu			
	CPT	0.2 mg/m3	Mexico. Occupational Exposure Limit Values (03 2000)
Copper and/or copper alloys and compounds (as Cu) - Dust and mist. - as Cu	CPT	1 mg/m3	Mexico. Occupational Exposure Limit Values (03 2000)
Cobalt and compounds (as Co) - Dust and fume. - as Co	CPT	0.1 mg/m3	Mexico. Occupational Exposure Limit Values (03 2000)

Biological Limit Values: US

Chemical Identity	Exposure Limit Values	Source
Cobalt and compounds (as Co) (Cobalt: Sampling time: End of shift at end of work week.)	15 µg/l (Urine)	ACGIH BEI (03 2015)

Biological Limit Values: MEXICO

Chemical Identity	Exposure Limit Values	Source
Cobalt and compounds (as Co) (Cobalt: Sampling time: End of shift at end of work week.)	15 µg/l (Urine)	MX IBE (06 2012)
	1 µg/l (Blood)	MX IBE (06 2012)

Additional exposure limits under the conditions of use: US

Chemical Identity	type	Exposure Limit Values		Source
Carbon dioxide	TWA	5,000 ppm		US. ACGIH Threshold Limit Values (12 2010)
	STEL	30,000 ppm		US. ACGIH Threshold Limit Values (12 2010)
	PEL	5,000 ppm	9,000 mg/m3	US. OSHA Table Z-1 Limits for Air Contaminants (29 CFR 1910.1000) (02 2006)
	STEL	30,000 ppm	54,000 mg/m3	US. NIOSH: Pocket Guide to Chemical Hazards (2005)
	REL	5,000 ppm	9,000 mg/m3	US. NIOSH: Pocket Guide to Chemical Hazards (2005)
Carbon monoxide	TWA	25 ppm		US. ACGIH Threshold Limit Values (12 2010)
	PEL	50 ppm	55 mg/m3	US. OSHA Table Z-1 Limits for Air Contaminants (29 CFR 1910.1000) (02 2006)
	REL	35 ppm	40 mg/m3	US. NIOSH: Pocket Guide to Chemical Hazards (2005)
	Ceil_Time	200 ppm	229 mg/m3	US. NIOSH: Pocket Guide to Chemical Hazards (2005)
Nitrogen dioxide	TWA	0.2 ppm		US. ACGIH Threshold Limit Values (02 2012)
	Ceiling	5 ppm	9 mg/m3	US. OSHA Table Z-1 Limits for Air Contaminants (29 CFR 1910.1000) (02 2006)
	STEL	1 ppm	1.8 mg/m3	US. NIOSH: Pocket Guide to Chemical Hazards (2005)
Ozone	PEL	0.1 ppm	0.2 mg/m3	US. OSHA Table Z-1 Limits for Air Contaminants (29 CFR 1910.1000) (02 2006)
	Ceil_Time	0.1 ppm	0.2 mg/m3	US. NIOSH: Pocket Guide to Chemical Hazards (2005)
	TWA	0.05 ppm		US. ACGIH Threshold Limit Values (03 2014)
	TWA	0.20 ppm		US. ACGIH Threshold Limit Values (03 2014)
	TWA	0.10 ppm		US. ACGIH Threshold Limit Values (03 2014)
	TWA	0.08 ppm		US. ACGIH Threshold Limit Values (03 2014)

Manganese - Fume. - as Mn	Ceiling	5 mg/m3	US. OSHA Table Z-1 Limits for Air Contaminants (29 CFR 1910.1000) (02 2006)
	REL	1 mg/m3	US. NIOSH: Pocket Guide to Chemical Hazards (2005)
	STEL	3 mg/m3	US. NIOSH: Pocket Guide to Chemical Hazards (2005)
Manganese - Inhalable fraction. - as Mn	TWA	0.1 mg/m3	US. ACGIH Threshold Limit Values (03 2014)
Manganese - Respirable fraction. - as Mn	TWA	0.02 mg/m3	US. ACGIH Threshold Limit Values (03 2014)
Chromium (VI) - as Cr	TWA	0.05 mg/m3	US. ACGIH Threshold Limit Values (12 2010)
Chromium (VI)	TWA	0.005 mg/m3	US. OSHA Specifically Regulated Substances (29 CFR 1910.1001-1050) (02 2006)
	OSHA_ACT	0.0025 mg/m3	US. OSHA Specifically Regulated Substances (29 CFR 1910.1001-1050) (02 2006)
Chromium (VI) - as Cr	REL	0.5 mg/m3	US. NIOSH: Pocket Guide to Chemical Hazards (2010)
Nickel - Inhalable fraction.	TWA	1.5 mg/m3	US. ACGIH Threshold Limit Values (12 2010)
Nickel - as Ni	PEL	1 mg/m3	US. OSHA Table Z-1 Limits for Air Contaminants (29 CFR 1910.1000) (02 2006)
	REL	0.015 mg/m3	US. NIOSH: Pocket Guide to Chemical Hazards (2005)
Chromium oxide - as Cr	TWA	0.5 mg/m3	US. ACGIH Threshold Limit Values (03 2012)
	PEL	0.5 mg/m3	US. OSHA Table Z-1 Limits for Air Contaminants (29 CFR 1910.1000) (02 2006)
	REL	0.5 mg/m3	US. NIOSH: Pocket Guide to Chemical Hazards (2005)

Additional exposure limits under the conditions of use: CANADA

Chemical Identity	type	Exposure Limit Values		Source
Carbon dioxide	STEL	30,000 ppm	54,000 mg/m3	Canada. Alberta OELs (Occupational Health & Safety Code, Schedule 1, Table 2) (07 2009)
	TWA	5,000 ppm	9,000 mg/m3	Canada. Alberta OELs (Occupational Health & Safety Code, Schedule 1, Table 2) (07 2009)
	TWA	5,000 ppm		Canada. British Columbia OELs. (Occupational Exposure Limits for Chemical Substances, Occupational Health and Safety Regulation 296/97, as amended) (07 2007)
	STEL	15,000 ppm		Canada. British Columbia OELs. (Occupational Exposure Limits for Chemical Substances, Occupational Health and Safety Regulation 296/97, as amended) (07 2007)
	TWA	5,000 ppm		Canada. Manitoba OELs (Reg. 217/2006, The Workplace Safety And Health Act) (03 2011)
	STEL	30,000 ppm		Canada. Manitoba OELs (Reg. 217/2006, The Workplace Safety And Health Act) (03 2011)
	STEV	30,000 ppm		Canada. Ontario OELs. (Control of Exposure to Biological or Chemical Agents) (11 2010)
	TWAEV	5,000 ppm		Canada. Ontario OELs. (Control of Exposure to Biological or Chemical Agents) (11 2010)
	8 HR ACL	5,000 ppm		Canada. Saskatchewan OELs (Occupational Health and Safety Regulations, 1996, Table 21) (05 2009)

	15 MIN ACL	30,000 ppm		Canada. Saskatchewan OELs (Occupational Health and Safety Regulations, 1996, Table 21) (05 2009)
	TWA	5,000 ppm	9,000 mg/m3	Canada. Quebec OELs. (Ministry of Labor - Regulation Respecting the Quality of the Work Environment) (12 2008)
	STEL	30,000 ppm	54,000 mg/m3	Canada. Quebec OELs. (Ministry of Labor - Regulation Respecting the Quality of the Work Environment) (12 2008)
Carbon monoxide	TWA	25 ppm	29 mg/m3	Canada. Alberta OELs (Occupational Health & Safety Code, Schedule 1, Table 2) (07 2009)
	TWA	25 ppm		Canada. British Columbia OELs. (Occupational Exposure Limits for Chemical Substances, Occupational Health and Safety Regulation 296/97, as amended) (07 2007)
	STEL	100 ppm		Canada. British Columbia OELs. (Occupational Exposure Limits for Chemical Substances, Occupational Health and Safety Regulation 296/97, as amended) (07 2007)
	TWA	25 ppm		Canada. Manitoba OELs (Reg. 217/2006, The Workplace Safety And Health Act) (03 2011)
	STEV	100 ppm		Canada. Ontario OELs. (Control of Exposure to Biological or Chemical Agents) (07 2010)
	TWAEV	25 ppm		Canada. Ontario OELs. (Control of Exposure to Biological or Chemical Agents) (07 2010)
	8 HR ACL	25 ppm		Canada. Saskatchewan OELs (Occupational Health and Safety Regulations, 1996, Table 21) (05 2009)
	15 MIN ACL	190 ppm		Canada. Saskatchewan OELs (Occupational Health and Safety Regulations, 1996, Table 21) (05 2009)
	TWA	35 ppm	40 mg/m3	Canada. Quebec OELs. (Ministry of Labor - Regulation Respecting the Quality of the Work Environment) (12 2008)
	STEL	200 ppm	230 mg/m3	Canada. Quebec OELs. (Ministry of Labor - Regulation Respecting the Quality of the Work Environment) (12 2008)
Nitrogen dioxide	STEL	5 ppm	9.4 mg/m3	Canada. Alberta OELs (Occupational Health & Safety Code, Schedule 1, Table 2) (07 2009)
	TWA	3 ppm	5.6 mg/m3	Canada. Alberta OELs (Occupational Health & Safety Code, Schedule 1, Table 2) (07 2009)
	CEILING	1 ppm		Canada. British Columbia OELs. (Occupational Exposure Limits for Chemical Substances, Occupational Health and Safety Regulation 296/97, as amended) (07 2007)
	TWA	0.2 ppm		Canada. Manitoba OELs (Reg. 217/2006, The Workplace Safety And Health Act) (03 2012)
	STEV	5 ppm		Canada. Ontario OELs. (Control of Exposure to Biological or Chemical Agents) (11 2010)
	TWAEV	3 ppm		Canada. Ontario OELs. (Control of Exposure to Biological or Chemical Agents) (11 2010)
	8 HR ACL	3 ppm		Canada. Saskatchewan OELs (Occupational Health and Safety Regulations, 1996, Table 21) (05 2009)
	15 MIN ACL	5 ppm		Canada. Saskatchewan OELs (Occupational Health and Safety Regulations, 1996, Table 21) (05 2009)
	TWA	3 ppm	5.6 mg/m3	Canada. Quebec OELs. (Ministry of Labor - Regulation Respecting the Quality of the Work Environment) (12 2008)

Ozone	STEL	0.3 ppm	0.6 mg/m3	Canada. Alberta OELs (Occupational Health & Safety Code, Schedule 1, Table 2) (07 2009)
	TWA	0.1 ppm	0.2 mg/m3	Canada. Alberta OELs (Occupational Health & Safety Code, Schedule 1, Table 2) (07 2009)
	TWA	0.05 ppm		Canada. British Columbia OELs. (Occupational Exposure Limits for Chemical Substances, Occupational Health and Safety Regulation 296/97, as amended) (07 2007)
	TWA	0.1 ppm		Canada. British Columbia OELs. (Occupational Exposure Limits for Chemical Substances, Occupational Health and Safety Regulation 296/97, as amended) (07 2007)
	TWA	0.08 ppm		Canada. British Columbia OELs. (Occupational Exposure Limits for Chemical Substances, Occupational Health and Safety Regulation 296/97, as amended) (07 2007)
	TWA	0.2 ppm		Canada. British Columbia OELs. (Occupational Exposure Limits for Chemical Substances, Occupational Health and Safety Regulation 296/97, as amended) (07 2007)
	TWAEV	0.1 ppm	0.2 mg/m3	Canada. Ontario OELs. (Control of Exposure to Biological or Chemical Agents) (07 2010)
	STEV	0.3 ppm	0.6 mg/m3	Canada. Ontario OELs. (Control of Exposure to Biological or Chemical Agents) (07 2010)
	15 MIN ACL	0.15 ppm		Canada. Saskatchewan OELs (Occupational Health and Safety Regulations, 1996, Table 21) (05 2009)
	8 HR ACL	0.05 ppm		Canada. Saskatchewan OELs (Occupational Health and Safety Regulations, 1996, Table 21) (05 2009)
	CEILING	0.1 ppm	0.2 mg/m3	Canada. Quebec OELs. (Ministry of Labor - Regulation Respecting the Quality of the Work Environment) (12 2008)
	TWA	0.20 ppm		Canada. Manitoba OELs (Reg. 217/2006, The Workplace Safety And Health Act) (03 2014)
	TWA	0.05 ppm		Canada. Manitoba OELs (Reg. 217/2006, The Workplace Safety And Health Act) (03 2014)
	TWA	0.08 ppm		Canada. Manitoba OELs (Reg. 217/2006, The Workplace Safety And Health Act) (03 2014)
	TWA	0.10 ppm		Canada. Manitoba OELs (Reg. 217/2006, The Workplace Safety And Health Act) (03 2014)
Manganese - as Mn	TWA		0.2 mg/m3	Canada. Alberta OELs (Occupational Health & Safety Code, Schedule 1, Table 2) (07 2009)
	TWA		0.2 mg/m3	Canada. British Columbia OELs. (Occupational Exposure Limits for Chemical Substances, Occupational Health and Safety Regulation 296/97, as amended) (07 2007)
	TWAEV		0.2 mg/m3	Canada. Ontario OELs. (Control of Exposure to Biological or Chemical Agents) (11 2010)
	8 HR ACL		0.2 mg/m3	Canada. Saskatchewan OELs (Occupational Health and Safety Regulations, 1996, Table 21) (05 2009)
	15 MIN ACL		0.6 mg/m3	Canada. Saskatchewan OELs (Occupational Health and Safety Regulations, 1996, Table 21) (05 2009)
Manganese - Fume. - as Mn	TWA		1 mg/m3	Canada. Quebec OELs. (Ministry of Labor - Regulation Respecting the Quality of the Work Environment) (12 2008)

Manganese - Dust. - as Mn	TWA	5 mg/m3	Canada. Quebec OELs. (Ministry of Labor - Regulation Respecting the Quality of the Work Environment) (12 2008)
Manganese - Fume. - as Mn	STEL	3 mg/m3	Canada. Quebec OELs. (Ministry of Labor - Regulation Respecting the Quality of the Work Environment) (12 2008)
Manganese - Respirable fraction. - as Mn	TWA	0.02 mg/m3	Canada. Manitoba OELs (Reg. 217/2006, The Workplace Safety And Health Act) (03 2014)
Manganese - Inhalable fraction. - as Mn	TWA	0.1 mg/m3	Canada. Manitoba OELs (Reg. 217/2006, The Workplace Safety And Health Act) (03 2014)
Chromium (VI) - as Cr	TWA	0.01 mg/m3	Canada. Alberta OELs (Occupational Health & Safety Code, Schedule 1, Table 2) (07 2009)
	TWA	0.05 mg/m3	Canada. Alberta OELs (Occupational Health & Safety Code, Schedule 1, Table 2) (07 2009)
	TWA	0.025 mg/m3	Canada. British Columbia OELs. (Occupational Exposure Limits for Chemical Substances, Occupational Health and Safety Regulation 296/97, as amended) (07 2007)
	CEILING	0.1 mg/m3	Canada. British Columbia OELs. (Occupational Exposure Limits for Chemical Substances, Occupational Health and Safety Regulation 296/97, as amended) (07 2007)
	TWA	0.05 mg/m3	Canada. Manitoba OELs (Reg. 217/2006, The Workplace Safety And Health Act) (03 2011)
	TWAEV	0.05 mg/m3	Canada. Ontario OELs. (Control of Exposure to Biological or Chemical Agents) (11 2010)
	8 HR ACL	0.01 mg/m3	Canada. Saskatchewan OELs (Occupational Health and Safety Regulations, 1996, Table 21) (05 2009)
	8 HR ACL	0.05 mg/m3	Canada. Saskatchewan OELs (Occupational Health and Safety Regulations, 1996, Table 21) (05 2009)
	15 MIN ACL	0.03 mg/m3	Canada. Saskatchewan OELs (Occupational Health and Safety Regulations, 1996, Table 21) (05 2009)
	15 MIN ACL	0.15 mg/m3	Canada. Saskatchewan OELs (Occupational Health and Safety Regulations, 1996, Table 21) (05 2009)
	TWA	0.05 mg/m3	Canada. Quebec OELs. (Ministry of Labor - Regulation Respecting the Quality of the Work Environment) (12 2008)
	TWA	0.01 mg/m3	Canada. Quebec OELs. (Ministry of Labor - Regulation Respecting the Quality of the Work Environment) (12 2008)
Nickel	TWA	1.5 mg/m3	Canada. Alberta OELs (Occupational Health & Safety Code, Schedule 1, Table 2) (07 2009)
	TWA	0.05 mg/m3	Canada. British Columbia OELs. (Occupational Exposure Limits for Chemical Substances, Occupational Health and Safety Regulation 296/97, as amended) (05 2013)
Nickel - Inhalable fraction.	TWA	1.5 mg/m3	Canada. Manitoba OELs (Reg. 217/2006, The Workplace Safety And Health Act) (03 2011)
Nickel - Inhalable - as Ni	TWAEV	1 mg/m3	Canada. Ontario OELs. (Control of Exposure to Biological or Chemical Agents) (11 2010)
Nickel - Inhalable fraction. - as Ni	8 HR ACL	1.5 mg/m3	Canada. Saskatchewan OELs (Occupational Health and Safety Regulations, 1996, Table 21) (05 2009)
	15 MIN ACL	3 mg/m3	Canada. Saskatchewan OELs (Occupational Health and Safety Regulations, 1996, Table 21) (05 2009)

Nickel	TWA	1 mg/m3	Canada. Quebec OELs. (Ministry of Labor - Regulation Respecting the Quality of the Work Environment) (12 2008)
Chromium oxide - as Cr	TWA	0.5 mg/m3	Canada. Alberta OELs (Occupational Health & Safety Code, Schedule 1, Table 2) (07 2009)
	TWA	0.5 mg/m3	Canada. British Columbia OELs. (Occupational Exposure Limits for Chemical Substances, Occupational Health and Safety Regulation 296/97, as amended) (09 2011)
	TWA	0.5 mg/m3	Canada. Manitoba OELs (Reg. 217/2006, The Workplace Safety And Health Act) (03 2012)
	TWAEV	0.5 mg/m3	Canada. Ontario OELs. (Control of Exposure to Biological or Chemical Agents) (11 2010)
	8 HR ACL	0.5 mg/m3	Canada. Saskatchewan OELs (Occupational Health and Safety Regulations, 1996, Table 21) (05 2009)
	15 MIN ACL	1.5 mg/m3	Canada. Saskatchewan OELs (Occupational Health and Safety Regulations, 1996, Table 21) (05 2009)

Additional exposure limits under the conditions of use: MEXICO

Chemical Identity	type	Exposure Limit Values		Source
Carbon dioxide	CPT	5,000 ppm	9,000 mg/m3	Mexico. Occupational Exposure Limit Values (03 2000)
	CTT	15,000 ppm	27,000 mg/m3	Mexico. Occupational Exposure Limit Values (03 2000)
Carbon monoxide	CTT	400 ppm	400 mg/m3	Mexico. Occupational Exposure Limit Values (03 2000)
	CPT	50 ppm	55 mg/m3	Mexico. Occupational Exposure Limit Values (03 2000)
Nitrogen dioxide	CTT	5 ppm	10 mg/m3	Mexico. Occupational Exposure Limit Values (03 2000)
	CPT	3 ppm	6 mg/m3	Mexico. Occupational Exposure Limit Values (03 2000)
Ozone	P	0.1 ppm	0.2 mg/m3	Mexico. Occupational Exposure Limit Values (03 2000)
Manganese - as Mn	CPT		0.2 mg/m3	Mexico. Occupational Exposure Limit Values (03 2000)
Manganese - Fume. - as Mn	CPT		1 mg/m3	Mexico. Occupational Exposure Limit Values (03 2000)
	CTT		3 mg/m3	Mexico. Occupational Exposure Limit Values (03 2000)
Chromium (VI)	CPT		0.05 mg/m3	Mexico. Occupational Exposure Limit Values (03 2000)
	CPT		0.01 mg/m3	Mexico. Occupational Exposure Limit Values (03 2000)
Nickel	CPT		1 mg/m3	Mexico. Occupational Exposure Limit Values (03 2000)
Chromium oxide	CPT		0.5 mg/m3	Mexico. Occupational Exposure Limit Values (03 2000)

Appropriate Engineering Controls

Ventilation: Use enough ventilation, local exhaust at the arc, or both to keep the fumes and gases from the worker's breathing zone and the general area. Train the welder to keep his head out of the fumes. **Keep exposure as low as possible.**

Individual protection measures, such as personal protective equipment

General information:

Exposure Guidelines: Threshold Limit Values (TLVs) and Biological Exposure Indices (BEIs) are values published by the American Conference of Government Industrial Hygienists (ACGIH). ACGIH Statement of Positions Regarding the TLVs® and BEIs® states that the TLV-TWA should be used as a guide in the control of health hazards and should not be used to indicate a fine line between safe and dangerous exposures. See Section 10 for information on potential fume constituents of health interest. Threshold Limit Values are figures published by the American Conference of Government Industrial Hygienists.

Maximum Fume Exposure Guideline™ (MFEG)™ for this product (based on content of Manganese) is 0.1 mg/m3. This exposure guideline is calculated using the most conservative value of the ACGIH TLV or OSHA PEL for the stated substance.

Eye/face protection:

Wear helmet or use face shield with filter lens shade number 12 or darker for open arc processes. No specific lens shade recommendation for submerged arc processes. Shield others by providing screens and flash goggles.

Skin Protection

Hand Protection:

Wear protective gloves. Suitable gloves can be recommended by the glove supplier.

Other:

Protective Clothing: Wear hand, head, and body protection which help to prevent injury from radiation, sparks and electrical shock. See Z49.1. At a minimum this includes welder's gloves and a protective face shield, and may include arm protectors, aprons, hats, shoulder protection, as well as dark substantial clothing. Wear dry gloves free of holes or split seams. Train the welder not to permit electrically live parts or electrodes to contact skin . . . or clothing or gloves if they are wet. Insulate yourself from the work piece and ground using dry plywood, rubber mats or other dry insulation.

Respiratory Protection:

Keep your head out of fumes. Use enough ventilation and local exhaust to keep fumes and gases from your breathing zone and the general area. An approved respirator should be used unless exposure assessments are below applicable exposure limits.

Hygiene measures:

Do not eat, drink or smoke when using the product. Always observe good personal hygiene measures, such as washing after handling the material and before eating, drinking, and/or smoking. Routinely wash work clothing and protective equipment to remove contaminants.

Determine the composition and quantity of fumes and gases to which workers are exposed by taking an air sample from inside the welder's helmet if worn or in the worker's breathing zone. Improve ventilation if exposures are not below limits. See ANSI/AWS F1.1, F1.2, F1.3 and F1.5, available from the American Welding Society, www.aws.org.

9. PHYSICAL AND CHEMICAL PROPERTIES

Appearance:	Solid welding wire or rod
Physical state:	solid
Form:	solid
Color:	No data available.
Odor:	No data available.
Odor threshold:	No data available.

pH:	not applicable
Melting point/freezing point:	No data available.
Initial boiling point and boiling range:	No data available.
Flash Point:	not applicable
Evaporation rate:	not applicable
Flammability (solid, gas):	No data available.
Upper/lower limit on flammability or explosive limits	
Flammability limit - upper (%):	No data available.
Flammability limit - lower (%):	No data available.
Explosive limit - upper (%):	No data available.
Explosive limit - lower (%):	No data available.
Vapor pressure:	not applicable
Vapor density:	not applicable
Relative density:	No data available.
Solubility(ies)	
Solubility in water:	No data available.
Solubility (other):	No data available.
Partition coefficient (n-octanol/water):	No data available.
Auto-ignition temperature:	No data available.
Decomposition temperature:	No data available.
Viscosity:	not applicable

10. STABILITY AND REACTIVITY

Reactivity:	The product is non-reactive under normal conditions of use, storage and transport.
Chemical Stability:	Material is stable under normal conditions.
Possibility of hazardous reactions:	No data available.
Conditions to avoid:	Avoid heat or contamination.
Incompatible Materials:	Strong oxidizing substances. Strong acids. Strong bases.

Hazardous Decomposition Products:

Welding fumes and gases cannot be classified simply. The composition and quantity of both are dependent upon the metal being welded, the process, procedure and electrodes used. Other conditions which also influence the composition and quantity of the fumes and gases to which workers may be exposed include: coatings on the metal being welded (such as paint, plating, or galvanizing), the number of welders and the volume of the worker area, the quality and amount of ventilation, the position of the welder's head with respect to the fume plume, as well as the presence of contaminants in the atmosphere (such as chlorinated hydrocarbon vapors from cleaning and degreasing activities.)

When the electrode is consumed, the fume and gas decomposition products generated are different in percent and form from the ingredients listed in Section 3. Decomposition products of normal operation include those originating from the volatilization, reaction, or oxidation of the materials shown in Section 3, plus those from the base metal and coating, etc., as noted above. Reasonably expected fume constituents produced during arc welding include the oxides of iron, manganese and other metals present in the welding consumable or base metal. Hexavalent chromium compounds may be in the welding fume of consumables or base metals which contain chromium. Gaseous and particulate fluoride may be in the welding fume of consumables which contain fluoride. Gaseous reaction products may include carbon monoxide and carbon dioxide. Ozone and nitrogen oxides may be formed by the radiation from the arc.

11. TOXICOLOGICAL INFORMATION

Information on likely routes of exposure

Ingestion: Health injuries from ingestion are not known or expected under normal use.

Inhalation: Potential chronic health hazards related to the use of welding consumables are most applicable to the inhalation route of exposure. Refer to Inhalation statements in Section 11.

Skin Contact: Arc rays can burn skin. Skin cancer has been reported.

Eye contact: Arc rays can injure eyes.

Symptoms related to the physical, chemical and toxicological characteristics

Inhalation: Short-term (acute) overexposure to welding fumes may result in discomfort such as metal fume fever, dizziness, nausea, or dryness or irritation of nose, throat, or eyes. May aggravate pre-existing respiratory problems (e.g. asthma, emphysema). Long-term (chronic) overexposure to welding fumes can lead to siderosis (iron deposits in lung), central nervous system effects, bronchitis and other pulmonary effects.

Information on toxicological effects

Acute toxicity (list all possible routes of exposure)

Oral

Product:	Not classified
Specified substance(s):	
Iron	LD 50 (Rat): 98.6 g/kg
Copper and/or copper alloys and compounds (as Cu)	LD 50 (Rat): 481 mg/kg
Cobalt and compounds (as Co)	LD 50 (Rat): 550 mg/kg

Dermal
Product: Not classified

Inhalation
Product: Not classified
Specified substance(s):
Cobalt and compounds (as Co) — LC 50 (Rat, 4 h): <= 0.05 mg/l

Repeated dose toxicity
Product: Not classified

Skin Corrosion/Irritation
Product: Not classified

Serious Eye Damage/Eye Irritation
Product: Not classified

Respiratory or Skin Sensitization
Product: Not classified

Carcinogenicity
Product: Arc rays: Skin cancer has been reported.

IARC Monographs on the Evaluation of Carcinogenic Risks to Humans:

Nickel	Overall evaluation: 2B. Possibly carcinogenic to humans.
Cobalt and compounds (as Co)	Overall evaluation: 2B. Possibly carcinogenic to humans.

US. National Toxicology Program (NTP) Report on Carcinogens:
Nickel — Reasonably Anticipated to be a Human Carcinogen.

US. OSHA Specifically Regulated Substances (29 CFR 1910.1001-1050):
No carcinogenic components identified

Germ Cell Mutagenicity

In vitro
Product: Not classified

In vivo
Product: Not classified

Reproductive toxicity
Product: Not classified

Specific Target Organ Toxicity - Single Exposure
Product: Not classified

Specific Target Organ Toxicity - Repeated Exposure
Product: Not classified

Aspiration Hazard
Product: Not classified

Other effects: Organic polymers may be used in the manufacture of various welding consumables. Overexposure to their decomposition byproducts may result in a condition known as polymer fume fever. Polymer fume fever usually occurs within 4 to 8 hours of exposure with the presentation of flu like symptoms, including mild pulmonary irritation with or without an increase in body temperature. Signs of exposure can include an increase in white blood cell count. Resolution of symptoms typically occurs quickly, usually not lasting longer than 48 hours.

Symptoms related to the physical, chemical and toxicological characteristics under the condition of use

Inhalation:
Specified substance(s):

Manganese	Overexposure to manganese fumes may affect the brain and central nervous system, resulting in poor coordination, difficulty speaking, and arm or leg tremor. This condition can be irreversible.
Chromium (VI)	Chromates may cause ulceration, perforation of the nasal septum, and severe irritation of the bronchial tubes and lungs. Liver damage and allergic reactions, including skin rash, have been reported. Asthma has been reported in some sensitized individuals. Skin contact may result in irritation, ulceration, sensitization, and contact dermatitis. Chromates contain the hexavalent form of chromium. Hexavalent chromium and its compounds are on the IARC (International Agency for Research on Cancer) and NTP (National Toxicology Program) lists as posing a cancer risk to humans.
Nickel	Nickel and its compounds are on the IARC and NTP lists as posing respiratory cancer risk, and are skin sensitizers with symptoms ranging from slight itch to severe dermatitis.

Additional toxicological Information under the conditions of use:

Acute toxicity

Oral
Specified substance(s):

Chromium (VI)	LD 50 (Rat): 27 - 59 mg/kg

Inhalation
Specified substance(s):

Carbon dioxide	LC Lo (Human, 5 min): 90000 ppm
Carbon monoxide	LC 50 (Rat, 4 h): 1,300 mg/l
Nitrogen dioxide	LC 50 (Rat, 4 h): 88 ppm
Ozone	LC Lo (Human, 30 min): 50 ppm
Chromium (VI)	LC 50 (Rat, 4 h): 33 - 70 mg/m3

Carcinogenicity
IARC Monographs on the Evaluation of Carcinogenic Risks to Humans:
Specified substance(s):

Chromium (VI)	Overall evaluation: 1. Carcinogenic to humans.
Nickel	Overall evaluation: 2B. Possibly carcinogenic to humans.
Chromium oxide	Overall evaluation: 3. Not classifiable as to carcinogenicity to humans.

US. National Toxicology Program (NTP) Report on Carcinogens;
Specified substance(s):

Chromium (VI)	Known To Be Human Carcinogen.
Nickel	Reasonably Anticipated to be a Human Carcinogen.

US. OSHA Specifically Regulated Substances (29 CFR 1910.1001-1050):
Specified substance(s):

Chromium (VI)	Cancer

Other effects:
Specified substance(s):

Carbon dioxide	asphyxia
Carbon monoxide	Carboxyhemoglobinemia
Nitrogen dioxide	Lower Respiratory Tract irritation
Nickel	dermatitis pneumoconiosis

12. ECOLOGICAL INFORMATION

General information: not applicable

Ecotoxicity

Acute hazards to the aquatic environment:

Fish

Product:	Not classified
Specified substance(s):	
Nickel	LC 50 (Fathead minnow (Pimephales promelas), 96 h): 2.916 mg/l
Molybdenum	LC 50 (Rainbow trout,donaldson trout (Oncorhynchus mykiss), 96 h): 800 mg/l
Copper and/or copper alloys and compounds (as Cu)	LC 50 (Fathead minnow (Pimephales promelas), 96 h): 1.6 mg/l
Cobalt and compounds (as Co)	LC 50 (Rainbow trout,donaldson trout (Oncorhynchus mykiss), 28 d): > 0.17 - < 15.61 mg/l

Aquatic Invertebrates

Product:	Not classified
Specified substance(s):	
Nickel	EC 50 (Water flea (Daphnia magna), 48 h): 1 mg/l
Manganese	EC 50 (Water flea (Daphnia magna), 48 h): 40 mg/l
Copper and/or copper alloys and compounds (as Cu)	EC 50 (Water flea (Daphnia magna), 48 h): 0.102 mg/l

Chronic hazards to the aquatic environment:

Fish

Product:	Not classified

Aquatic Invertebrates

Product:	Not classified

Toxicity to Aquatic Plants

Product:	Not classified
Specified substance(s):	
Copper and/or copper alloys and compounds (as Cu)	LC 50 (Green algae (Scenedesmus dimorphus), 3 d): 0.0623 mg/l

Persistence and Degradability

Biodegradation

Product:	No data available.

Bioaccumulative Potential

Bioconcentration Factor (BCF)

Product:	No data available.
Specified substance(s):	
Nickel	Zebra mussel (Dreissena polymorpha), Bioconcentration Factor (BCF): 5,000 - 10,000 (Lotic) Bioconcentration factor calculated using dry weight tissue conc
Copper and/or copper alloys and compounds (as Cu)	Blue-green algae (Anacystis nidulans), Bioconcentration Factor (BCF): 36.01 (Static)
Cobalt and compounds (as Co)	Brown shrimp (Penaeus aztecus), Bioconcentration Factor (BCF): > 2,250 - < 2,500 (Static)

Mobility in Soil: No data available.

13. Disposal considerations

General information: The generation of waste should be avoided or minimized whenever possible. When practical, recycle in an environmentally acceptable, regulatory compliant manner. Dispose of non-recyclable products in accordance with all applicable Federal, State, Provincial, and Local requirements.

Disposal Instructions: Disposal of this product may be regulated as a Hazardous Waste. The welding consumable and/or by-product from the welding process (including, but not limited to slag, dust, etc.) may contain levels of leachable heavy metals such as Barium or Chromium. Prior to disposal, a representative sample must be analyzed in accordance with US EPA's Toxicity Characteristic Leaching Procedure (TCLP) to determine if any constituents exist above regulated threshold levels. Discard any product, residue, disposable container, or liner in an environmentally acceptable manner according to Federal, State and Local Regulations. Wash before disposal. Dispose to controlled facilities.

14. TRANSPORT INFORMATION

DOT

UN Number:	
UN Proper Shipping Name:	NOT DG REGULATED
Transport Hazard Class(es)	
Class:	NR
Label(s):	–
Packing Group:	–
Marine Pollutant:	Not regulated.
Special precautions for user:	–

IMDG

UN Number:	
UN Proper Shipping Name:	NOT DG REGULATED
Transport Hazard Class(es)	
Class:	NR
Label(s):	–
EmS No.:	
Packing Group:	–
Marine Pollutant:	Not regulated.
Special precautions for user:	–

IATA

UN Number:	
Proper Shipping Name:	NOT DG REGULATED
Transport Hazard Class(es):	
Class:	NR
Label(s):	–
Packing Group:	–
Environmental Hazards	Not regulated.
Special precautions for user:	–
Other information	
Passenger and cargo aircraft:	Allowed.
Cargo aircraft only:	Allowed.

TDG

UN Number:	
UN Proper Shipping Name:	NOT DG REGULATED
Transport Hazard Class(es)	
Class:	NR
Label(s):	–
Packing Group:	–
Marine Pollutant:	Not regulated.
Special precautions for user:	–

15. REGULATORY INFORMATION

Canadian Controlled Products Regulations: This product has been classified according to the hazard criteria of the Canadian Controlled Products Regulations, Section 33, and the SDS contains all required information.

US Federal Regulations

TSCA Section 12(b) Export Notification (40 CFR 707, Subpt. D)
None present or none present in regulated quantities.

US. OSHA Specifically Regulated Substances (29 CFR 1910.1001-1050)
None present or none present in regulated quantities.

CERCLA Hazardous Substance List (40 CFR 302.4):

Chemical Identity	Reportable quantity
Chromium and chromium alloys or compounds (as Cr)	5000lbs.
Nickel	100lbs.
Manganese	Included in the regulation but with no data values. See regulation for further details.
Copper and/or copper alloys and compounds (as Cu)	5000lbs.
Cobalt and compounds (as Co)	Included in the regulation but with no data values. See regulation for further details.

Superfund Amendments and Reauthorization Act of 1986 (SARA)

Hazard categories
Acute (Immediate)
Chronic (Delayed)

SARA 302 Extremely Hazardous Substance
None present or none present in regulated quantities.

SARA 304 Emergency Release Notification

Chemical Identity	Reportable quantity
Chromium and chromium alloys or compounds (as Cr)	5000 lbs.
Nickel	100 lbs.
Manganese	Included in the regulation but with no data values. See regulation for further details.
Copper and/or copper alloys and compounds (as Cu)	5000 lbs.
Cobalt and compounds (as Co)	Included in the regulation but with no data values. See regulation for further details.

SARA 311/312 Hazardous Chemical

Chemical Identity	Threshold Planning Quantity
Iron	10000 lbs
Chromium and chromium alloys or compounds (as Cr)	10000 lbs
Nickel	10000 lbs
Manganese	10000 lbs
Silicon	10000 lbs
Molybdenum	10000 lbs
Copper and/or copper alloys and compounds (as Cu)	10000 lbs
Cobalt and compounds (as Co)	10000 lbs

SARA 313 (TRI Reporting)

Chemical Identity	Reporting threshold for other users	Reporting threshold for manufacturing and processing
Chromium and chromium alloys or compounds (as Cr)	10000 lbs	25000 lbs.
Nickel	10000 lbs	25000 lbs.
Manganese	10000 lbs	25000 lbs.
Cobalt and compounds (as Co)	10000 lbs	25000 lbs.

Clean Water Act Section 311 Hazardous Substances (40 CFR 117.3)

None present or none present in regulated quantities.

Clean Air Act (CAA) Section 112(r) Accidental Release Prevention (40 CFR 68.130):

None present or none present in regulated quantities.

US State Regulations

US. California Proposition 65

This product contains chemical(s) known to the State of California to cause cancer and/or to cause birth defects or other reproductive harm.

Nickel	Carcinogenic.
Cobalt and compounds (as Co)	Carcinogenic.

WARNING: This product contains or produces a chemical known to the State of California to cause cancer and birth defects (or other reproductive harm). (California Health & Safety Code Section 25249.5 et seq.)

US. New Jersey Worker and Community Right-to-Know Act

Chemical Identity

Chromium and chromium alloys or compounds (as Cr)
Nickel
Manganese
Cobalt and compounds (as Co)

US. Massachusetts RTK - Substance List

Chemical Identity

Chromium and chromium alloys or compounds (as Cr)
Nickel

US. Pennsylvania RTK - Hazardous Substances

Chemical Identity

Chromium and chromium alloys or compounds (as Cr)
Nickel
Manganese

US. Rhode Island RTK
No ingredient regulated by RI Right-to-Know Law present.

Inventory Status:

Australia AICS:	On or in compliance with the inventory
Canada DSL Inventory List:	On or in compliance with the inventory
EINECS, ELINCS or NLP:	On or in compliance with the inventory
Japan (ENCS) List:	One or more components are not listed or are exempt from listing.
Korea Existing Chemicals Inv. (KECI):	On or in compliance with the inventory
Canada NDSL Inventory:	One or more components are not listed or are exempt from listing.
US TSCA Inventory:	On or in compliance with the inventory
New Zealand Inventory of Chemicals:	On or in compliance with the inventory
Japan ISHL Listing:	One or more components are not listed or are exempt from listing.
Japan Pharmacopoeia Listing:	One or more components are not listed or are exempt from listing.
China Inv. Existing Chemical Substances:	On or in compliance with the inventory
Philippines PICCS:	On or in compliance with the inventory

16. OTHER INFORMATION

Definitions:

The Maximum Fume Exposure Guideline™ (MFEG)™ is a guideline limit for total welding fume exposure for a specific consumable product which may be used by employers to manage worker exposure to welding fume where that product is used. The MFEG™ is an estimate of the level of total welding fume exposure for a given product above which the exposure limit for one of the fume constituents may be exceeded. The exposure limits referenced are the American Conference of Governmental Industrial Hygienists (ACGIH) Threshold Limit Value (TLV®) and the U.S. OSHA Permissible Exposure Limit (PEL) whichever limit is lower. The MFEG™ never exceeds 5 mg/m³ which is the maximum recommended exposure limit for total welding fume. **The MFEG™ is intended to serve as a general guideline to assist in the management of workplace exposure to welding fume and does not replace the regular measurement and analysis of worker exposure to individual welding fume constituents.**

The Maximum Dust Exposure Guideline™ (MDEG)™ is provided to assist with the management of workplace exposures where granular solid welding products or other materials are being utilized. It is derived from relevant compositional data and estimates the lowest level of total airborne dust exposure, for a given product, at which some specific constituent might potentially exceed its individual exposure limit. The specific exposure limits referenced are the American Conference of Governmental Industrial Hygienists (ACGIH) Threshold Limit Value (TLV®) and the U. S. OSHA Permissible Exposure Limit (PEL), which ever value is the lowest. The MDEG™ is never greater than 10 mg/m³ as this is the airborne exposure guideline for total particulate (total dust). **The MDEG™ is intended to serve as a general guideline to assist in the management of workplace exposure and does not replace the regular measurement and analysis of worker exposure to individual airborne dust constituents.**

Revision Date:	12/18/2015
Further Information:	Additional information is available by request.

Disclaimer:

The Lincoln Electric Company urges each end user and recipient of this SDS to study it carefully. See also www.lincolnelectric.com/safety. If necessary, consult an industrial hygienist or other expert to understand this information and safeguard the environment and protect workers from potential hazards associated with the handling or use of this product. This information is believed to be accurate as of the revision date shown above. However, no warranty, expressed or implied, is given. Because the conditions or methods of use are beyond Lincoln Electric's control, we assume no liability resulting from the use of this product. Regulatory requirements are subject to change and may differ between various locations. Compliance with all applicable Federal, State, Provincial, and local laws and regulations remain the responsibility of the user.

© 2015 Lincoln Global, Inc. All Rights Reserved.

Date:	12/1/2010	MSDS No.:	US-W20
Trade Name:	Lincolnweld L-70		
Sizes:	All		
Supersedes:	12/1/2007		

MATERIAL SAFETY DATA SHEET

For Welding Consumables and Related Products

Conforms to Hazard Communication Standard 29CFR 1910.1200 Rev. October 1988

SECTION I - IDENTIFICATION

Manufacturer/ Supplier: The Lincoln Electric Company
22801 St. Clair Avenue
Cleveland, OH 44117-1199
(216) 481-8100

Product Type: Low Alloy Electrode

Classification: AWS EA1

SECTION II - HAZARDOUS MATERIAL (1)

IMPORTANT!
This section covers the materials from which this product is manufactured. The fumes and gases produced during welding with the normal use of this product are covered by Section V; see it for industrial hygiene information.
CAS Number shown is representative for the ingredients listed.
(1) The term "hazardous" in "Hazardous Materials" should be interpreted as a term required and defined in the Hazards Communication Standard and does not necessarily imply the existence of any hazard. All materials are listed on the TSCA inventory.

Ingredients:	CAS No.	Wt.%	TLV mg/m^3	PEL mg/m^3
Low alloy steel wire		100	10*	10*
Nominal wire composition:				
Total manganese *****	7439-96-5	0.5	0.2	5 (c)
Total molybdenum	7439-98-7	0.5	10	10
Total copper including plated coating *****	7440-50-8	< 0.5	0.2(a)	0.1(a)
Iron	7439-89-6	bal.	10*	10*

Supplemental Information:

(*) Not listed. The OSHA PEL for nuisance particles is 15 milligrams per cubic meter. The ACGIH guideline for total particulate is 10 milligrams per cubic meter. PEL value for iron oxide is 10 milligrams per cubic meter. TLV value for iron oxides is 5 milligrams per cubic meter.

(*****) Subject to the reporting requirements of Sections 311, 312, and 313 of the Emergency Planning and Community Right-to-Know Act of 1986 and of 40CFR 370 and 372.

(c) Value is for manganese fume. Present PEL is 5 milligrams per cubic meter (ceiling value). Values proposed by OSHA in 1989 were 1.0 milligrams per cubic meter TWA and 3.0 milligrams per cubic meter STEL (Short Term Exposure Limit)

(a) Values are for copper fume.

SECTION III - HAZARD DATA

Non Flammable; Welding arc and sparks can ignite combustibles and flammable products. See Z49.1 referenced in Section VI.
Product is inert, no special handling or spill procedures required. Not regulated by DOT.

(CONTINUED ON SIDE TWO)

Product:	**Lincolnweld L-70**
Date:	**12/1/2010**

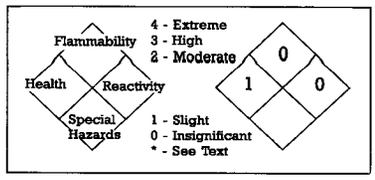

SECTION IV - HEALTH HAZARD DATA

Threshold Limit Value: The ACGIH recommended general limit for Welding Fume NOS - (Not Otherwise Specified) is 5 mg/m^3. ACGIH-1999 preface states that the TLV-TWA should be used as guides in the control of health hazards and should not be used as fine lines between safe and dangerous concentrations. See Section V for specific fume constituents which may modify this TLV. Threshold Limit Values are figures published by the American Conference of Government Industrial Hygienists. Units are milligrams per cubic meter of air.

Effects of Overexposure: Electric arc welding may create one or more of the following health hazards:
Fumes and Gases can be dangerous to your health. Common entry is by inhalation. Other possible routes are skin contact and ingestion.

Short-term (acute) overexposure to welding fumes may result in discomfort such as metal fume fever, dizziness, nausea, or dryness or irritation of nose, throat, or eyes. May aggravate pre-existing respiratory problems (e.g. asthma, emphysema).

Long-term (chronic) overexposure to welding fumes can lead to siderosis (iron deposits in lung) and may affect pulmonary function. Manganese overexposure can affect the central nervous system, resulting in impaired speech and movement. Bronchitis and some lung fibrosis have been reported. WARNING: This product, when used for welding or cutting, produces fumes or gases which contain chemicals known to the State of California to cause birth defects and, in some cases, cancer. (California Health & Safety Code Section 25249.5 et seq.)

Arc Rays can injure eyes and burn skin. *Skin cancer has been reported.*
Electric Shock can kill. If welding must be performed in damp locations or with wet clothing, on metal structures or when in cramped positions such as sitting, kneeling or lying, or if there is a high risk of unavoidable or accidental contact with workpiece, use the following equipment: Semiautomatic DC Welder, DC Manual (Stick) Welder, or AC Welder with Reduced Voltage Control.

Emergency and First Aid Procedures: Call for medical aid. Employ first aid techniques recommended by the American Red Cross.
IF BREATHING IS DIFFICULT give oxygen. IF NOT BREATHING employ CPR (Cardiopulmonary Resuscitation) techniques.
IN CASE OF ELECTRICAL SHOCK, turn off power and follow recommended treatment. In all cases call a physician.

SECTION V - REACTIVITY DATA

Hazardous Decomposition Products: Welding fumes and gases cannot be classified simply. The composition and quantity of both are dependent upon the metal being welded, the process, procedure and electrodes used.

Other conditions which also influence the composition and quantity of the fumes and gases to which workers may be exposed include: coatings on the metal being welded (such as paint, plating, or galvanizing), the number of welders and the volume of the worker area, the quality and amount of ventilation, the position of the welder's head with respect to the fume plume, as well as the presence of contaminants in the atmosphere (such as chlorinated hydrocarbon vapors from cleaning and degreasing activities.)

When the electrode is consumed, the fume and gas decomposition products generated are different in percent and form from the ingredients listed in Section II. Decomposition products of normal operation include those originating from the volatilization, reaction, or oxidation of the materials shown in Section II, plus those from the base metal and coating, etc., as noted above.

Reasonably expected fume constituents of this product would include: Primarily iron oxide and fluorides; secondarily complex oxides of aluminum, calcium, magnesium, manganese, molybdenum, potassium, silicon, sodium, titanium and zirconium when used with recommended Lincolnweld fluxes.

Maximum fume exposure guideline for this product is 5.0 milligrams per cubic meter.

Gaseous reaction products may include carbon monoxide and carbon dioxide. Ozone and nitrogen oxides may be formed by the radiation from the arc.

Determine the composition and quantity of fumes and gases to which workers are exposed by taking an air sample from inside the welder's helmet if worn or in the worker's breathing zone. Improve ventilation if exposures are not below limits. See ANSI/AWS F1.1, F1.2, F1.3, F1.4, and F1.5, available from the American Welding Society, 550 N.W. LeJeune Road, Miami, FL 33126.

SECTION VI AND VII
CONTROL MEASURES AND PRECAUTIONS FOR SAFE HANDLING AND USE

Read and understand the manufacturer's instruction and the precautionary label on the product. Request Lincoln Safety Publication E205. See American National Standard Z49.1, "Safety In Welding, Cutting and Allied Processes" published by the American Welding Society, 550 N.W. LeJeune Road, Miami, FL, 33126 (both available for free download at http://www.lincolnelectric.com/community/safety/) and OSHA Publication 2206 (29CFR1910), U.S. Government Printing Office, Superintendent of Documents, P.O. Box 371954, Pittsburgh, PA 15250-7954 for more details on many of the following:

Ventilation: Use enough ventilation, local exhaust at the arc, or both to keep the fumes and gases from the worker's breathing zone and the general area. Train the welder to keep his head out of the fumes. *Keep exposure as low as possible.*

Respiratory Protection: Use respirable fume respirator or air supplied respirator when welding in confined space or general work area when local exhaust or ventilation does not keep exposure below TLV.

Eye Protection: Wear helmet or use face shield with filter lens shade number * or darker. Shield others by providing screens and flash goggles.
(*) No specific recommendation for submerged arc.

Protective Clothing: Wear hand, head, and body protection which help to prevent injury from radiation, sparks and electrical shock. See Z49.1. At a minimum this includes welder's gloves and a protective face shield, and may include arm protectors, aprons, hats, shoulder protection, as well as dark substantial clothing. Train the welder not to permit electrically live parts or electrodes to contact skin or clothing or gloves if they are wet. Insulate from work and ground.

Disposal Information: Discard any product, residue, disposable container, or liner as ordinary waste in an environmentally acceptable manner according to Federal, State and Local Regulations unless otherwise noted. No applicable ecological information available.

Date:	1/5/2012	MSDS No.:	US-F120
Trade Name:	Lincolnweld 781		
Sizes:	---		
Supersedes:	1/5/2009		

MATERIAL SAFETY DATA SHEET

For Welding Consumables and Related Products

Conforms to Hazard Communication Standard 29CFR 1910.1200 Rev. October 1988

SECTION I - IDENTIFICATION

Manufacturer/ Supplier: The Lincoln Electric Company
22801 St. Clair Avenue
Cleveland, OH 44117-1199
(216) 481-8100

Product Type: Submerged Arc Flux

Classification: AWS F7A0-EM13K
F7A0-EM12K
F7A0-EL12

SECTION II - HAZARDOUS MATERIAL (1)

IMPORTANT!

This section covers the materials from which this product is manufactured. The fumes and gases produced during welding with the normal use of this product are covered by Section V; see it for industrial hygiene information.
CAS Number shown is representative for the ingredients listed. All ingredients listed may not be present in all sizes.
(1) The term "hazardous" in "Hazardous Materials" should be interpreted as a term required and defined in the Hazards Communication Standard and does not necessarily imply the existence of any hazard. All materials are listed on the TSCA inventory.

Ingredients:	CAS No.	Wt.%	TLV mg/m^3	PEL mg/m^3
Magnesite	1309-48-4	15	10*	15
Titanium dioxides	13463-67-7	10	10	15
Manganese and/or manganese alloys and compounds (as Mn)*****	7439-96-5	10	0.2	5 (c)
Silicates and other binders	1344-09-8	5	10*	15*
Quartz	14808-60-7	< 5	#0.025**	#0.1**
Aluminum oxide and/or Bauxite	1344-28-1	< 5	10*	15
Silicon and/or silicon alloys and compounds (as Si)	7440-21-3	< 5	10*	15*
Iron	7439-89-6	< 5	10*	15*
Fluorides (as F)	7789-75-5	< 5	2.5	2.5
Mineral silicates	1332-58-7	< 0.5	5**	5**
Iron oxides	65996-74-9	< 0.5	5	10

Supplemental Information:

(*) Not listed. The OSHA PEL for nuisance particles is 15 milligrams per cubic meter. The ACGIH guideline for total particulate is 10 milligrams per cubic meter. PEL value for iron oxide is 10 milligrams per cubic meter. TLV value for iron oxides is 5 milligrams per cubic meter.

(**) As respirable dust.

(*****) Subject to the reporting requirements of Sections 311, 312, and 313 of the Emergency Planning and Community Right-to-Know Act of 1986 and of 40CFR 370 and 372.

(c) Value is for manganese fume. Present PEL is 5 milligrams per cubic meter (ceiling value). Values proposed by OSHA in 1989 were 1.0 milligrams per cubic meter TWA and 3.0 milligrams per cubic meter STEL (Short Term Exposure Limit).

(#) Crystalline silica (quartz) is on the IARC (International Agency for Research on Cancer) and NTP (National Toxicology Program) lists as posing a carcinogenic risk to humans.

SECTION III - HAZARD DATA

Non Flammable; Welding arc and sparks can ignite combustibles and flammable products. See Z49.1 referenced in Section VI.
Product is inert, no special handling or spill procedures required. Not regulated by DOT.

(CONTINUED ON SIDE TWO)

Product:	**Lincolnweld 781**
Date:	**1/5/2012**

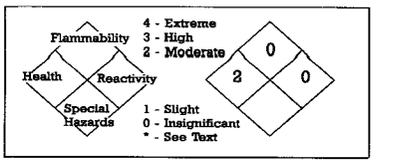

SECTION IV - HEALTH HAZARD DATA

Threshold Limit Value: The ACGIH recommended general limit for Welding Fume NOS - (Not Otherwise Specified) is 5 mg/m^3.
ACGIH-1999 preface states that the TLV-TWA should be used as guides in the control of health hazards and should not be used as fine lines between safe and dangerous concentrations. See Section V for specific fume constituents which may modify this TLV. Threshold Limit Values are figures published by the American Conference of Government Industrial Hygienists. Units are milligrams per cubic meter of air.

Effects of Overexposure: Electric arc welding may create one or more of the following health hazards:
Fumes and Gases can be dangerous to your health. Common entry is by inhalation. Other possible routes are skin contact and ingestion.

Short-term (acute) overexposure to welding fumes may result in discomfort such as metal fume fever, dizziness, nausea, or dryness or irritation of nose, throat, or eyes. May aggravate pre-existing respiratory problems (e.g. asthma, emphysema).

Long-term (chronic) overexposure to welding fumes can lead to siderosis (iron deposits in lung) and may affect pulmonary function. Manganese overexposure can affect the central nervous system, resulting in impaired speech and movement. Bronchitis and some lung fibrosis have been reported. Titanium dioxide is listed by the IARC (International Agency for Research on Cancer) as a Group 2B carcinogen (possibly carcinogenic to humans based on animal studies). Overexposure to crystalline silica present in dust from this material can cause severe lung damage (silicosis). Respiratory overexposure to airborne crystalline silica is known to cause silicosis, a form of disabling pulmonary fibrosis which can be progressive and may lead to death. Crystalline silica is on the IARC (International Agency for Research on Cancer) and NTP (National Toxicology Program) lists as posing a cancer risk to humans. Repeated exposure to fluorides may cause excessive calcification of the bone and calcification of ligaments of the ribs, pelvis and spinal column. May cause skin rash. WARNING: This product contains or produces a chemical known to the State of California to cause cancer and birth defects (or other reproductive harm). (California Health & Safety Code Section 25249.5 et seq.)

Arc Rays can injure eyes and burn skin. *Skin cancer has been reported.*
Electric Shock can kill. If welding must be performed in damp locations or with wet clothing, on metal structures or when in cramped positions such as sitting, kneeling or lying, or if there is a high risk of unavoidable or accidental contact with workpiece, use the following equipment: Semiautomatic DC Welder, DC Manual (Stick) Welder, or AC Welder with Reduced Voltage Control.

Emergency and First Aid Procedures: Call for medical aid. Employ first aid techniques recommended by the American Red Cross.
IF BREATHING IS DIFFICULT give oxygen. IF NOT BREATHING employ CPR (Cardiopulmonary Resuscitation) techniques.
IN CASE OF ELECTRICAL SHOCK, turn off power and follow recommended treatment. In all cases call a physician.

SECTION V - REACTIVITY DATA

Hazardous Decomposition Products: Welding fumes and gases cannot be classified simply. The composition and quantity of both are dependent upon the metal being welded, the process, procedure and electrodes used.

Other conditions which also influence the composition and quantity of the fumes and gases to which workers may be exposed include: coatings on the metal being welded (such as paint, plating, or galvanizing), the number of welders and the volume of the worker area, the quality and amount of ventilation, the position of the welder's head with respect to the fume plume, as well as the presence of contaminants in the atmosphere (such as chlorinated hydrocarbon vapors from cleaning and degreasing activities.)

When the electrode is consumed, the fume and gas decomposition products generated are different in percent and form from the ingredients listed in Section II. Decomposition products of normal operation include those originating from the volatilization, reaction, or oxidation of the materials shown in Section II, plus those from the base metal and coating, etc., as noted above.

Reasonably expected fume constituents of this product would include: Primarily iron oxide and fluorides; secondarily complex oxides of aluminum, calcium, magnesium, manganese, potassium, silicon, and sodium when used with recommended Lincolnweld electrodes. (See MSDS for electrode being used.)

Maximum fume exposure guideline for this product (based manganese content) is 4.0 milligrams per cubic meter. Maximum respirable dust exposure guideline and PEL for this flux (based on crystalline silica) is 0.5 milligrams per cubic meter. Handle to minimize generation of airborne dust. Use adequate ventilation and dust collection. Use respiratory protection, if required, to keep exposure below limits.

Gaseous reaction products may include carbon monoxide and carbon dioxide. Ozone and nitrogen oxides may be formed by the radiation from the arc.
Determine the composition and quantity of fumes and gases to which workers are exposed by taking an air sample from inside the welder's helmet if worn or in the worker's breathing zone. Improve ventilation if exposures are not below limits. See ANSI/AWS F1.1, F1.2, F1.3 and F1.5, available from the American Welding Society, 550 N.W. LeJeune Road, Miami, FL 33126.

SECTION VI AND VII
CONTROL MEASURES AND PRECAUTIONS FOR SAFE HANDLING AND USE

Read and understand the manufacturer's instruction and the precautionary label on the product. Request Lincoln Safety Publication E205. See American National Standard Z49.1, "Safety In Welding, Cutting and Allied Processes" published by the American Welding Society, 550 N.W. LeJeune Road, Miami, FL, 33126 (both available for free download at http://www.lincolnelectric.com/community/safety/) and OSHA Publication 2206 (29CFR1910), U.S. Government Printing Office, Superintendent of Documents, P.O. Box 371954, Pittsburgh, PA 15250-7954 for more details on many of the following:

Ventilation: Use enough ventilation, local exhaust at the arc, or both to keep the fumes and gases from the worker's breathing zone and the general area. Train the welder to keep his head out of the fumes. *Keep exposure as low as possible.*

Respiratory Protection: Use respirable fume respirator or air supplied respirator when welding in confined space or general work area when local exhaust or ventilation does not keep exposure below TLV.

Eye Protection: Wear helmet or use face shield with filter lens shade number * or darker. Shield others by providing screens and flash goggles.
(*) No specific recommendation for submerged arc.

Protective Clothing: Wear hand, head, and body protection which help to prevent injury from radiation, sparks and electrical shock. See Z49.1.
At a minimum this includes welder's gloves and a protective face shield, and may include arm protectors, aprons, hats, shoulder protection, as well as dark substantial clothing. Train the welder not to permit electrically live parts or electrodes to contact skin or clothing or gloves if they are wet. Insulate from work and ground.

Disposal Information: Discard any product, residue, disposable container, or liner as ordinary waste in an environmentally acceptable manner according to Federal, State and Local Regulations unless otherwise noted. No applicable ecological information available.

Appendix C

IDEQ Toxic Air Pollutant (TAP)
Preconstruction Compliance Application Completeness Checklist

TORF
ENVIRONMENTAL
MANAGEMENT

Department of Environmental Quality - Air Quality Division
Toxic Air Pollutant (TAP) Preconstruction Compliance Application Completeness Checklist

This checklist is designed to aid the applicant in submitting a complete preconstruction compliance demonstration for toxic air pollutants (TAPs) in permit to construct applications. The applicant must place a check mark in the box for each section below that applies.

I. Actions Needed Before Submitting Application

☑ Refer to the Rule. Read the Demonstration of Preconstruction Compliance with Toxic Standards contained in IDAPA 58.01.01.210 (Rules Section 210) Rules for the Control of Air Pollution in Idaho (Rules). Toxic air pollutants (TAPs) are regulated in accordance with Rules Section 210 only from emission units constructed or modified on or after July 1, 1995.

Determine if a new (constructed after June 30, 1995) emission unit has the potential to emit a TAP listed in IDAPA 58.01.01.585 (Rules Section 585) or IDAPA 58.0101.586 (Rules Section 586). Potential toxic air pollutants can be determined by reviewing commonly available emission factors, such as EPA's AP-42, or calculating emissions using a mass balance. For TAPs that are emitted but not listed in Rules Section 585 and 586, contact the Air Permit Hotline at 877-5PERMIT.

Determine if the proposed construction or modification is exempt from the need to obtain a permit to construct in accordance with IDAPA 58.01.01.220-223. Use the Exemption Criteria and Reporting Requirements for TAPs IDAPA 58.01.01.223 checklist to assist you in the exemption determination. If the source does not qualify for an exemption in accordance with IDAPA 58.01.01.220-223 complete the following checklist and submit it with the permit application. Please note that fugitive TAP emissions are not included in the IDAPA 58.01.01.223 exemption determination, but fugitive TAP emissions are included in the analysis if a permit is required. Stated another way: if a source is required to obtain a Permit to Construct because it does not meet the exemption criteria for any reason all TAP emissions, including fugitive TAPs, are included in the compliance demonstration in the application for the permit to construct. Should you have any questions regarding the fact that all TAPs, including fugitive TAPs, are included in the TAP preconstruction compliance demonstration submitted with a permit to construct application you may call the Air Permit Hotline at 877-5PERMIT.

Will the new or modified source result in new or increased potential emissions of TAPs?

☑ Yes. If yes, continue to section II.

☐ No. If no, no further action is required.

II. Application Content

If a new source has the potential to emit a TAP, or if a modification to an existing source increases the potential to emit of a TAP, then one of the following methods (A-J) of demonstrating TAP preconstruction compliance must be documented for each TAP. Standard methods are one of A-C. The applicant may also use one of the specialized methods in D-J. Fugitive TAP emissions shall be included in the analysis. The compliance methods are based on the requirements of Rules Section 210. Applicants are often able to demonstrate preconstruction TAP compliance using a combination of methods A and B.

Emission Calculations

Emissions calculation methodologies used are dependent on whether a specific TAP is a non-carcinogen or a carcinogen and whether the compliance method chosen from the list below calls

for controlled or uncontrolled emissions. Non-carcinogens are regulated based on a 24-hour averaging period and emission rates used for comparison to the non-carcinogen screening emissions level (EL) should be the maximum controlled or uncontrolled emissions quantity during any 24-hour period divided by 24. Carcinogens are regulated as a long term increment and emission rates used for comparison to the carcinogen EL should be the maximum controlled or uncontrolled emissions quantity during any 1 year period divided by 8760.

Modeling Analyses

Atmospheric dispersion modeling is required when controlled TAP emissions rates exceed ELs. Modeling analyses should be conducted in accordance with IDAPA 58.01.01.210.03. Quantification of Ambient Concentrations and the State of Idaho Air Quality Modeling Guideline (http;//www.deq.idaho.gov/air/data_reports/publications.cfm#model). For non-carcinogen 24-hour increments, compliance is demonstrated using the maximum modeled 24-hour-averaged concentration from available meteorological data (typically a five-year data set). For carcinogen long-term increments, compliance is demonstrated using the maximum modeled average concentration for the duration of the data set (one-year to five-year data set).

A submitted modeling report should clearly specify modeled emissions rates and results. All electronic model input files should be submitted, including BPIP input files.

Poly aromatic Hydrocarbons

Questions often arise regarding polyaromatic hydrocarbons as they are listed in Rules Section 586 of the Rules. The following two points are provided for clarification.

1) The following group of 7 PAH's (i.e. named POM), shall be combined and considered as one TAP equivalent in potency to benzo(a)pryrene:

   Benzo(a)anthracene, benzo(b)fluoranthene, benzo(k)fluoranthene, dibenzo(a, h) anthrancene, chrysene, indeno(1,2,3,-cd) pyrene, benzo (a) pyrene

2) All other PAH's are considered as a single pollutant and the emission of each is compared the PAH increment listed in Rules Section 586.

Compliance Methods

Fill in letter(s) (A-J) from the list below for TAP compliance demonstration method(s) used: _____.

A. TAPs Compliance Using Uncontrolled Emissions (Rules Section 210.05)

☐ Calculate the uncontrolled emissions (Rules Section 210.05) of each TAP from new emissions units. Uncontrolled emission rates are emissions at maximum capacity without the effect of physical or operational limitations. See Quantification of Emission Rates (Rules Section 210.02). Show calculations and state all assumptions.

☐ Calculate the increase of TAP emissions from modified emissions units. Show calculations and state all assumptions. The increase in emissions for a modified emission unit is determined by subtracting the potential to emit the TAP before the modification from the uncontrolled potential to emit after the modification. In conducting this analysis please note the following for TAP emission rate increase determinations:

Uncontrolled emission rates after the modification are emissions at maximum capacity without the effect of physical or operational limitations.

When determining the emissions increase from existing permitted emissions units the emission rate before the modification is equivalent to the emission limits contained in the permit for the

TAPs or, if there no emission limits in the permit, by determining what the emission rate is under the physical or operational limitations contained in the permit.

☐ Aggregate the uncontrolled emissions for each TAP from all new emissions units with the increase in emissions from all modified emissions units.

☐ If the aggregated emissions increase for each TAP from the new and modified units, as determined above, are less than or equal to the respective TAP screening emissions level (EL) then preconstruction compliance with toxic standards has been demonstrated and no further analysis is required. Submit a table comparing the uncontrolled emissions rate to the applicable EL.

If aggregated emissions are greater than the respective screening emissions level (EL) for any pollutants, use another compliance demonstration method for those pollutants, such as methods B, C, or D.

B. TAP Compliance Using Uncontrolled Ambient Concentration (Rules Section 210.06)

☐ Determine the uncontrolled emissions of each TAP from new emission units and the increase in emissions from all modified emissions units as described above in compliance Method A. Show calculations and state all assumptions.

☐ Model the uncontrolled emissions of each TAP from new emissions units and the increase in emissions from all modified emissions units.

☐ If the uncontrolled ambient concentration is less than or equal to the acceptable ambient concentration increment listed in Rules Section 585 and 586 no further procedures for demonstrating preconstruction compliance will be required for that TAP as part of the application process. Submit a table comparing uncontrolled ambient concentrations to the applicable acceptable ambient concentration.

C. TAP Compliance Using Controlled Ambient Concentrations (Rules Section 210.08)

☑ Determine the controlled emissions from new emissions units and the controlled emission increase from modified emissions units. Show all calculations and state all assumptions, including the control methods. **Controlled TAPs > ELs: arsenic, cadmium, chromium+6, formaldehyde, and nickel**

☑ Model the controlled emissions of each TAP from new emissions units and the increase in controlled emissions from all modified emissions units.

TAP emissions levels (EL) included in Rules Section 585 and 586 are derived based on generic modeling. If the sum the of emissions from new and modified sources is below the EL compliance is demonstrated without the need to conduct site-specific dispersion modeling.

TAPs--Uncontrolled manganese and phosphorous > ELs; Controlled manganese and phosphorous < ELs

☑ If the controlled ambient concentration from emission increases from new emissions units and modified emissions units is less than the applicable acceptable ambient concentration no further procedures for demonstrating preconstruction compliance are required.

☐ The Department shall include an emission limit for the TAP in the permit to construct that is equal to or, if requested by the applicant, less than the emission rate that was used in the modeling (Rules Section 210.08.c).

In some instances the Department may consider a throughput limit or other inherently-limiting operational restriction in a permit as an effective emission limit for the TAP, rather than including a specific emission rate limit.. Note that the applicant may model uncontrolled emissions as described in compliance Method B in an attempt to avoid TAPs emissions limitations.

D. TAPs Compliance for NSPS and NESHAP Sources (Rules Section 210.20)

☐ If the owner or operator demonstrates that the TAP emissions from the source or modification is regulated by 40 CFR Part 60, 40 CFR Part 61 or 40 CFR Part 63, no further procedures for demonstrating preconstruction compliance will be required for that TAP.

☐ Provide a demonstration that the TAP is regulated under 40 CFR Part 60, 40 CFR Part 61 or 40 CFR Part 63. This demonstration must be specific for each TAP emitted.

E. TAP Compliance Using Net Emissions (Rules Section 210.09)

An applicant may use TAP net emissions to show preconstruction compliance; however this analysis may require more work than some of the others procedures available to demonstrate preconstruction compliance. When netting, all emissions increases and decreases of the TAP that have occurred within five years must be included in the analysis as described below.

☐ Determine the net emission increase for a TAP. A net emissions increase shall be an emission increase from a particular modification plus any other increase and decreases in actual emissions at the facility that are creditable and contemporaneous with particular modification (Rules Section 210.09). Show all calculations and state all assumptions.

☐ A creditable increase or decrease in actual emissions is contemporaneous with a particular modification if it occurs within five (5) years of the commencement of the construction or modification (Rules Section 210.09.a).

Actual emissions are (Rules Section 006.03):

- ☐ In general, actual emissions as of a particular date shall equal the average rate, in tons per year, at which the unit actually emitted the pollutant during a two year period which precedes the particular date and which is representative of normal source operation. The Department shall allow the use of a different time period upon a determination that it is more representative of normal source operation. Actual emissions shall be calculated using the unit's actual operating hours, productions rates, and types of materials processed, stored, or combusted during the selected time period.

- ☐ The Department may presume that the source-specific allowable emissions for the unit are equivalent to actual emissions of the unit.

- ☐ For any emission unit (except electric utility steam generating units) that has not begun normal operations on the particular date, actual emissions shall equal the potential to emit of the unit on that date.

☐ Do not include emissions increases from emission units that have an uncontrolled emission rate that is 10% or less than the applicable screening emission level (EL) in Rules Section 585 and 586 (Rules Section 007.09.c.ii) and do not include emission increases from environmental remediation sources (Rules Section 007.09.c.iii). Show all calculations and state all assumptions.

☐ If the net emission increase is less than or equal to the applicable screening emissions level (EL) listed in Rules Section 585 and 586, no further procedures for demonstrating preconstruction compliance will be required (Rules Section 210.09.c).

☐ The Department shall include emission limits and other permit terms for the TAP in the permit to construct that will assure that the facility will be operated in the manner described in the preconstruction compliance demonstration (Rules Section 210.09.d).

In some instances the Department may consider a throughput limit or other inherently-limiting operational restriction in a permit as an effective emission limit for the TAP. rather than including a specific emission rate limit..

F. TAP Compliance Using Net Ambient Concentration (Rules Section 210.10)

☐ Determine the emission increase from the new source or modification, and all other creditable emission increases and decrease using the methods described above in compliance Method E.

☐ Model the emissions increases and decreases for each TAP. Modeling TAP decreases is accomplished by using negative valued emissions rates in the model input.

☐ If the net ambient concentration is less than or equal to the applicable ambient concentration increment listed in Rules Section 585 and 586, no further procedures for demonstrating preconstruction compliance are required.

☐ The Department shall include emission limits and other permit terms for the TAP in the permit to construct that will assure that the facility will be operated in the manner described in the preconstruction compliance demonstration (Rules Section 210.10.d).

In some instances the Department may consider a throughput limit or other inherently-limiting operational restriction in a permit as an effective emission limit for the TAP, rather than including a specific emission rate limit..

G. TAP Compliance Using T-RACT Ambient Concentration for Carcinogens (Rules Section 210.12)

The applicant may use T-RACT to demonstrate preconstruction compliance for TAPs listed in Rules Section 586 only.

T-RACT is an emissions standard based on the lowest emission of TAPs that a particular source is capable of meeting by application of control technology that is reasonably available, as determined by the Department, considering technological and economic feasibility. If control technology is not feasible, the emission standard may be based on the application of a design, equipment, work practice or operational requirement, or combination thereof (Rules Section 007.16).

T-RACT Submittal Requirements

☐ The applicant shall submit the following information to the Department identifying and documenting which control technologies or other requirements the applicant believes to be T-RACT (Rules Section 210.14).

The technical feasibility of a control technology or other requirements for a particular source shall be determined considering several factors including but not limited to:

- ☐ Process and operating procedures, raw materials and physical plant layout.
- ☐ The environmental impacts caused by the control technology that can not be mitigated, including but not limited to, water pollution and the production of solid wastes.
- ☐ The energy requirements of the control technology.

The economic feasibility of a control technology or other requirement, including the costs of necessary mitigation measures, for a particular source shall be determined considering several factors including, but not limited to:

- ☐ Capital costs.
- ☐ Cost effectiveness, which is the annualized cost of the control technology divided by the amount of emission reduction.
- ☐ The difference in costs between the particular source and other similar sources, if any, that have implemented emissions reductions.

☐ Compare the source's or modification's approved T-RACT ambient concentration to the applicable acceptable ambient concentration increment listed in Rules Section 586 multiplied by a factor of 10. If the sources approved T-RACT concentration is less than or equal to 10 times the applicable acceptable ambient concentration increment listed in Rules Section 586, no further procedures for demonstrating preconstruction compliance will be required.

☐ If an application is submitted to the Department without T-RACT and determined complete, and T-RACT is later determined to be applicable the completeness determination of the application will be revoked until a supplemental application is submitted and determined complete. When the supplemental application is determined complete, the timeline for agency action shall be reinitiated (Rules Section 210.13.b).

☐ If the Department determines that the source has proposed T-RACT, the Department shall develop emission standards to be incorporated into a permit to construct.

In some instances, the Department may consider a throughput limit or other inherently limiting operational restriction in a permit as an effective emission limit for the TAP, rather than including a specific emission rate limit..

H. TAP Compliance Using the Short Term Source Factor (Rules Section 210.15)

☐ For short term sources, the applicant may utilize a short term adjustment factor of ten (10) only for a carcinogenic pollutant listed in Rules Section 586. For a carcinogen listed in Rules Section 586 multiply either the applicable acceptable ambient concentration increment or the screening emission rate (EL), but not both, by ten (10) to demonstrate preconstruction compliance (Rules Section 210.15).

☐ A short term source is any new stationary source or modification to an existing source, with an operational life no greater than five (5) years from the inception of any operations to cessation of actual operations (Rules Section 210.15).

I. TAP Compliance for Environmental Remediation Sources (Rules Section 210.16)

☐ For remediation sources subject to or regulated by the Resource Conservation and Recovery Act and the Idaho Rules and Standard for Hazardous Waste, or the comprehensive Environmental Response, Compensation and Liability Act or a consent order, if the estimated ambient concentration is greater than the acceptable ambient impact increment listed in Rules Section 585 and 586, Best Available Control Technology shall be applied and operated until the estimated uncontrolled emission from the remediation source are below the applicable acceptable ambient concentration increment (Rules Section 210.16).

J. <u>TAP Compliance Using Offset Ambient Concentration (Rules Section 210.11)</u>

☐ Contact the Department prior to proposing to utilize Offset Ambient Concentrations to demonstrate preconstruction compliance.

☐ Emission offsets must satisfy the requirements for emission reduction credits (Rules Section 460).

- The proposed level of allowable emissions must be less than the actual emissions of the emissions units providing the offsets (Rules Section 460.01).
- An air quality permit must be issued that restricts the potential to emit of the emission unit providing the offset.
- Emission reduction imposed by local, state or federal regulations or permits shall not be allowed.

☐ Compare the source's or modifications approved emission offset ambient concentration to the applicable acceptable ambient concentration listed in Rules Section 585 and 586. If the source's or modifications approved offset concentration is less than the acceptable ambient concentration listed in Rules Section 585 and 586, no further procedures for demonstrating preconstruction compliance will be required.

☐ The Department shall include emission limits and other permit terms for the TAP in the permit to construct that will assure that the facility will be operated in the manner described in the preconstruction compliance demonstration (Rules Section 210.10.d).

Appendix D

Air Dispersion Modeling Protocol Report

TORF
ENVIRONMENTAL
MANAGEMENT

Western Trailer
6701 Business Way, Boise, Idaho 83709
Air Impact Modeling Analysis Report
September 2016

1.0 Summary

This submittal includes a modeling report consistent with Idaho Department of Environmental Quality (IDEQ) guidance on air quality modeling reports. IDEQ comments on this protocol are addressed in this modeling report, and specific responses to protocol approval comments are provided in Appendix A.

2.0 Project Description and Background as it Relates to Modeling Analyses

Western Trailer Co. (Western Trailer) is applying for a Permit to Construct for its existing manufacturing facility at 6701 Business Way, Boise, Idaho. The plant is located in an industrial area near the southeast corner of Boise, south of Interstate 84 and the Gowen Industrial Park, approximately ¼ mile east of Gowen Road.

2.1 General Facility/Project Description

Western Trailer's manufacturing is classified by the NAICS as 336212. Emission sources at the facility include make-up air heaters, numerous direct and indirect unit heaters, media blasting booth, paint and drying booth, welding in open-plan production areas, metal cutting and solvent recycling. Emissions include criteria pollutants, hazardous air pollutants (HAPs), and toxic air pollutants (TAPs).

2.2 Location of Project

The facility is located at 6701 Business Way, Boise, Idaho. The plant vicinity is an industrial area near the southeast corner of Boise, south of Interstate 84 and the Gowen Industrial Park, approximately ¼ mile east of Gowen Road. Model source data provides UTM coordinates that verify the facility location in fine detail. Figure 1 Site Vicinity, a Google Earth aerial photograph, below, shows the facility location and surrounding land use.

Figure 1 Site Vicinity

2.3 Existing Permits and Modeling Analyses Performed

The facility is an existing facility seeking its initial Air Quality Permit to Construct.

3.0 Modeling Analyses Applicability and Protocol

The analysis described here was described in a modeling protocol submitted to IDEQ on August 13, 2015 and revised on September 18, 2015. Changes in this final modeling analysis from information provided in the modeling protocol include the addition of new modeled sources BLST and BLDG10. These additional sources were modeled in accordance with the IDEQ's previous comments. All analysis details, including results, are consistent with the IDEQ approved modeling protocol and IDEQ comments on that protocol.

The primary emission sources at the facility result from cutting or welding metals, spray painting, abrasive-blast cleaning or from space heating using natural gas as a fuel. On a site-wide basis, all criteria

pollutants except VOCs emitted at these sources are cumulatively emitted at rates Below Regulatory Concern (BRC).[1]

In accordance with the IDEQ modeling guidance, if the emissions of all criteria pollutants except VOCs are less than the BRC threshold, criteria pollutants do not have to be modeled. Consequently, no modeling of criteria pollutants was proposed in the modeling protocol or included in this analysis. The inventory of potential emissions for the facility shows that conservatively calculated potential emissions of all TAPs except six (chromium VI, cadmium, formaldehyde, and arsenic, IDAPA 586 TAPs, and manganese and phosphorus, IDAPA 585 TAPs) are higher than IDAPA 585 or 586 TAP emission screening levels (ELs).[2] This modeling analysis assesses the potential impact of those TAPs, showing impacts would not reach or exceed IDAPA 585 AAC or 586 AACC impact limits.

The model chosen, consistent with EPA and IDEQ guidance and recommendations, was the EPA model AERMOD, the primary recommended model for facilities with multiple emission sources. AERMOD was applied as recommended in EPA's *Guideline on Air Quality Models* and discussed during the facility's recent pre-application meeting with IDEQ (July 14, 2015). The analysis assessed potential impacts from all TAPs potentially emitted above IDAPA 58.01.01.585 or 586 EL thresholds consistent with the IDEQ approved modeling protocol. Recommended regulatory default model options were employed, and the IDEQ recommended BETA option for horizontal point sources (POINTHOR) was applied for fan driven wall vent releases. Terrain data was processed consistent with EPA guidance for AERMAP using USGS NED data. BeeLine BEEST modeling software was employed. Five years of meteorological data recommended and provided by IDEQ in 2014 for modeling of the nearby Orepac facility were utilized, consistent with the IDEQ approved modeling protocol. The Prime building downwash algorithm was employed. As stated above, modeling analyses were not performed for any criteria pollutants because potential emissions of criteria pollutants except for VOCs were below the IDEQ IDAPA 58.01.01.221 BRC thresholds. Modeling analyses were performed for the TAPs chromium VI, cadmium, formaldehyde, arsenic, and nickel. Chemical transformation of emissions was not considered. For facility emissions, NOx emissions were conservatively used as NO2 emissions, adding extra conservatism

3.1 Applicable Standards

TAP emissions increases resulting from the project reaching IDAPA 585 or 586 ELs are identified in Table 1. A complete inventory of all TAPs potentially emitted and comparisons with IDAPA ELs is included in the emission inventory included in the permit application.

[1] Idaho Department of Environmental Quality, State of Idaho Guideline for Air Quality Impact Analyses, Section 3.1, Doc. ID AQ-011, Boise, Idaho, September 2013, page 11.
[2] Idaho Administrative Procedures Act, 58.01.01.585 and 586.

Table 1. TAP ELs and AACCS

TAP	Carcinogen or Non-Carcinogen	Screening Emissions Level (EL)[a](lb/hr)	AACC[b] (µg/m^3)
chromium VI	586 carcinogen	5.6E-07	0.000083
cadmium	586 carcinogen	3.70E-06	0.00056
formaldehyde	586 carcinogen	0.00051	0.077
arsenic	586 carcinogen	1.50E-06	0.00023
nickel	586 **carcinogen**	2.75E-05	.0420

a. ELs from Idaho Air Rules Section 585 in pounds/hour.
b. Acceptable Ambient Concentration for a Carcinogen (AACC) from Idaho Air Rules Section 586, in micrograms/cubic meter.

3.2 Criteria Pollutant Modeling Applicability

No criteria pollutant modeling was performed because potential emissions were below IDEQ Level II thresholds (see Section 3.0, above).

3.3 TAP Modeling Applicability

Emissions calculations that clearly show the emission rates of all TAPs potentially emitted by the proposed project with comparisons against applicable IDAPA EL modeling thresholds are provided in the emission inventory included in this application. A copy of that inventory of potential emissions is included in the electronic files provided to support this air quality modeling report.

As noted, the inventory of potential emissions indicates the six TAPs identified in Table 1 are the only pollutants for which any modeling is required.

3.4 Modeling Protocol

A modeling protocol was submitted to DEQ prior to the application submittal, during the week of August 10, 2015, with a minor revision submitted the week of September 18, 2015. Conditional DEQ protocol approval was provided in a letter dated October 6. Project-specific modeling and other required impact analyses were conducted using data and methods described in the protocol and in the *Idaho Air Quality Modeling Guideline*.

The protocol and DEQ's conditional protocol approval notice are included in Attachment A of the modeling report, and in the electronic copies accompanying this Modeling Report, with comments in the protocol approval letter documenting how the comments were addressed.

4.0 Modeled Emissions Sources

The emissions applicable to modeling, the potential emissions of the six TAPs listed in Table 1, come primarily from welding or natural gas fueled space heating. The inventory of potential emissions and the modeling analysis identify the following sources that were modeled;

1. Six point sources on the Paint Building (PAINTV1-PAINTV6), rooftop stacks with hinged, blow through rain shields (NOT rain caps) from natural gas fired heating processes emitted from the top of the Paint building;
2. Two point sources at the Paint Building (PAINTR1 and PAINTR2), sidewall vent fans exhausting room air with natural gas combustion emissions;
3. Two point sources at Building 1 (BLD1D1 and BLD1D2), sidewall vent fans exhausting room air with area welding processes and natural gas combustion emissions;
4. Three point sources at Building 1 (BLD1D3, BLD1D4, BLD1D5), sidewall vent fans exhausting room air with natural gas combustion emissions;
5. One point source at Building 1 (BLD1D6) exhausting a small heater's natural gas combustion emissions;
6. Six point source at Building 1 (BLD1D7, BLD1D8, BLD1D9, BLD1D10, BLD1D11, BLD1D12) roof vents exhausting a small heater natural gas combustion emissions;
7. One point source at Building 8 (BLD8D1), sidewall vent fan exhausting room air with area welding processes;
8. Three point sources at Building 8 (BLD8D2, BLD8D3, BLD8D4), roof vents exhausting natural gas combustion emissions;
9. One point source at Building 10 (BLD10D1), sidewall vent fan exhausting room air with area welding processes;
10. Five point sources at Building 10 (BLD10D2, BLD10D3, BLD10D4, BLD10D5, BLD10D6), sidewall vents exhausting natural gas combustion emissions; and
11. Two point sources at the Blast Building (BLST1 and BLST2), roof vents exhausting natural gas combustion emissions.

Building 1, Building 8, Building 10, Paint Building and Blast Building exhibit rooftop and wall vents discharging natural gas combustion emissions. Stack parameters and equipment specifications (stack height, stack dimensions and flow) were provided by Western Trailer and Western Trailer construction drawings. When stack vent temperatures were not specified by the equipment manufacturer, the temperature was conservatively estimated to be room temperature. Vent locations were developed from facility construction drawings, photographs and Google Earth photographs. These sources were modeled as point sources.

Building 1 exhibits small passive sidewall vents, fan sidewall vents and large overhead doors. Since the vents emit whenever the heaters are on and the doors are used only intermittently, most of the emissions from area welding and natural gas combustion emissions from numerous unvented room heaters at Building 1 are assumed to be exhausted at the wall fan vents, instead of the passive wall vents or large doors. The welding area emissions are split evenly between the 2 area wall fan vents. The natural gas combustion emissions are split evenly among all of the building's 5 wall fan vents. This representation is a conservative emissions scenario and was included in the protocol IDEQ approved.

Building 8 exhibits small passive sidewall vents, 1 fan sidewall vent, and large overhead doors. Similar to Building 1, welding emissions at Building 8 are conservatively assumed to emit from the wall fan vent.

The Paint Building exhibits 2 fan sidewall vents and large overhead doors at both sides of the building. Similar to Building 1, the natural gas combustion emissions from 2 make-up air heaters discharging into room air are conservatively assumed to emit from 2 wall fan vents.

The welding area at Building 10 exhibits 2 sidewall vents and large overhead doors. Similar to Building 1, the welding emissions and natural gas combustion emissions from unvented room heaters discharging into room air are conservatively assumed to emit from 1 wall fan vent nearest to the welding operations.

The sidewall fan vents were modeled as POINTHOR horizontal point sources per IDEQ's recommendation in the modeling protocol approval. Each POINTHOR source is associated with a building.

Actual stack parameters were verified for the wall vents, as described above for the point sources, and entered into AERMOD unaltered. Tom Swain of IDEQ was shown draft representations, and concurred with the POINTHOR application. Height of the release was used for release height, actual locations on building, double checked on modeling figures and Google Earth, were used for UTM coordinates. The same double check was used for model stack UTM coordinates.

Emissions from the largest natural-gas heater source, emitted from the roof of the Paint Building were conservatively estimated to occur 8.75 months per year for a total of 5,040 hrs / year (6 days per week, 24 hours per day, 35 weeks per year). Emissions from all other natural-gas heater sources were conservatively estimated to occur 7.6 months per year for a total 4,380 hrs / year (6 days per week, 24 hours per day, 30.4 weeks per year). According to National Weather Service data, mean average monthly temperatures for Boise during the period 1981- 2010 were 65 degrees F and above during 4 months of the year (June, July, August and September) and less than 65 degrees F during 8 months of

the year.[3] Mean minimum temperatures for the 4 warmest months were slightly lower (54, 60, 60, and 51), however the lows are expected to occur during non-production hours. Estimating supplemental heating for the largest heaters at 24 hours per day–6 days per week–8.75 months per year—5,040 total hours and all other heaters at 24 hours per day–6 days per week–7.6 months per year—4,380 total hours, is anticipated to conservatively exceed typical seasonal needs in the Boise area.

The draft inventory of potential emissions shows five TAPs (arsenic, cadmium, chromium VI, formaldehyde, and nickel) are conservatively estimated to potentially be emitted at rates exceeding IDAPA 58.01.01.585 and 586 EL thresholds. Each of the identified emission sources were modeled for each of the identified TAPs they emitted. Model stack parameters used were as described above. The derivation of each model emission rate is documented in worksheet 8-1 on the emission inventory in each emission rate cell. Actual dimension for all onsite buildings from facility specifications were verified on the ground or using Google Earth, then were used with BPIP Prime to assess potential downwash. Building and structure details and dimensions for inclusion in the BPIP downwash analysis were verified from building specifications, Google Earth and, for some features again on the ground. All peaked building roofs were conservatively modeled as flat tops at the building peak height.

Compliance with applicable impact limits is shown in this report in a manner consistent with that approved in the modeling protocol.

Table 2 shows the model source data used in the AERMOD analysis.

Table 2 AERMOD Model Source Data

Source ID	Stack Rel Type (Beta)	Src Descr	East (X)	North (Y)	Base Elev	Stk Ht	Temp	Exit Vel	Stk Diam	CR6	CADMIUM	FORMALD	ARSENIC	NICKEL
			(m)	(m)	(m)	(ft)	(K)	(fps)	(ft)	lb/hr	lb/hr	lb/hr	lb/hr	lb/hr
PAINT V1	DEFAULT	1/6 MAU2-3 Paint B Vik Viking Roof-Top(2)	566132.6	4821222.4	895.0	32.0	300.0	33.9	2.5		5.79E-07	3.95E-05	1.05E-07	1.11E-06
PAINT V2	DEFAULT	1/6 MAU2-3 Paint B Vik Viking Roof-Top(2)	566135.3	4821215.7	895.0	32.0	300.0	33.9	2.5		5.79E-07	3.95E-05	1.05E-07	1.11E-06
PAINT V3	DEFAULT	1/6 MAU2-3 Paint B Vik Viking	566137.8	4821209.2	895.0	32.0	300.0	33.9	2.5		5.79E-07	3.95E-05	1.05E-07	1.11E-06

[3] National Oceanic and Atmospheric Administration, National Weather Service Forecast Office, Online Weather Data, http://w2.weather.gov/climate/xmacis.php?wfo=boi.

Source ID	Stack Rel Type (Beta)	Src Descr	East (X)	North (Y)	Base Elev	Stk Ht	Temp	Exit Vel	Stk Diam	CR6	CADMIUM	FORMALD	ARSENIC	NICKEL
			(m)	(m)	(m)	(ft)	(K)	(fps)	(ft)	lb/hr	lb/hr	lb/hr	lb/hr	lb/hr
		Roof-Top(2)												
PAINT V4	DEFAULT	1/6 MAU2-3 Paint B Vik Viking Roof-Top(2)	566142.0	4821211.0	895.0	32.0	300.0	33.9	2.5		5.79E-07	3.95E-05	1.05E-07	1.11E-06
PAINT V5	DEFAULT	1/6 MAU2-3 Paint B Vik Viking Roof-Top(2)	566139.1	4821217.5	895.0	32.0	300.0	33.9	2.5		5.79E-07	3.95E-05	1.05E-07	1.11E-06
PAINT V6	DEFAULT	1/6 MAU2-3 Paint B Vik Viking Roof-Top(2)	566136.6	4821223.8	895.0	32.0	300.0	33.9	2.5		5.79E-07	3.95E-05	1.05E-07	1.11E-06
BLD1D 1	HORIZONTAL	Welding Area Wall Vent Fan - Horiz.	566174.6	4821232.3	895.6	17.2	293.0	0.0	2.8	2.00E-07	5.40E-07	3.68E-05	9.80E-08	5.18E-06
BLD1D 2	HORIZONTAL	Welding Area Wall Vent Fan - Horiz.	566180.6	4821217.3	895.6	17.2	293.0	0.0	2.8	2.00E-07	5.40E-07	3.68E-05	9.80E-08	5.18E-06
BLD1D 3	HORIZONTAL	NW Wall Vent Fan - Horiz.	566269.5	4821270.0	895.6	17.2	293.0	0.0	2.8		5.40E-07	3.68E-05	9.80E-08	1.03E-06
BLD1D 4	HORIZONTAL	N Wall Vent Fan - Horiz.	566280.2	4821243.0	895.6	16.5	293.0	0.0	2.8		5.40E-07	3.68E-05	9.80E-08	1.03E-06
BLD1D 5	HORIZONTAL	NE Wall Vent Fan - Horiz.	566287.6	4821224.7	895.6	16.5	293.0	0.0	2.8		5.40E-07	3.68E-05	9.80E-08	1.03E-06
BLD1D 6	HORIZONTAL	Heater Reznor FT30 - Horiz.	566241.5	4821282.2	895.6	12.0	293.0	0.0	0.3		1.62E-08	1.10E-06	2.94E-09	3.09E-08
BLD1D 7	RAINCAP	Tool Room Furnace	566251.5	4821264.8	895.6	38.0	293.0	0.0	0.4		2.48E-08	1.69E-06	4.51E-09	4.74E-08
BLD1D 8	RAINCAP	Office Furnace No. 1	566258.4	4821267.4	895.6	38.0	293.0	0.0	0.4		3.10E-07	2.11E-05	5.64E-08	5.92E-07
BLD1D 9	RAINCAP	Office Furnace No. 2	566259.0	4821267.0	895.6	38.0	293.0	0.0	0.4		3.10E-07	2.11E-05	5.64E-08	5.92E-07
BLD1D 10	RAINCAP	Office Furnace No. 3	566256.0	4821284.0	895.6	37.5	293.0	0.0	0.4		3.10E-07	2.11E-05	5.64E-08	5.92E-07
BLD1D 11	RAINCAP	Office Furnace No. 4	566252.0	4821280.0	895.6	37.5	293.0	0.0	0.4		3.10E-07	2.11E-05	5.64E-08	5.92E-07
BLD1D	RAINCAP	Office Furnac	566242.0	4821274.0	895.6	37.5	293.0	0.0	0.4		3.10E-07	2.11E-05	5.64E-08	5.92E-07

Source ID	Stack Rel Type (Beta)	Src Descr	East (X)	North (Y)	Base Elev	Stk Ht	Temp	Exit Vel	Stk Diam	CR6	CADMIUM	FORMALD	ARSENIC	NICKEL
			(m)	(m)	(m)	(ft)	(K)	(fps)	(ft)	lb/hr	lb/hr	lb/hr	lb/hr	lb/hr
12		e No. 5												
BLD8D 1	HORIZ ONTAL	Weldin g Area Wall Vent Fan - Horiz.	566140.0	4821358.0	893.4	13.5	293.0	0.0	3.5	1.00E-06				2.00E-06
BLD8D 2	HORIZ ONTAL	Heater 1 Vent	566120.0	4821345.0	893.4	22.5	293.0	0.0	0.4		2.26E-07	1.54E-05	4.12E-08	4.32E-07
BLD8D 3	HORIZ ONTAL	Heater 2 Vent	566113.0	4821342.0	893.4	23.3	293.0	0.0	0.4		2.26E-07	1.54E-05	4.12E-08	4.32E-07
BLD8D 4	HORIZ ONTAL	Heater 3 Vent	566094.1	4821334.2	893.4	20.5	293.0	0.0	0.4		5.39E-08	3.68E-06	9.80E-09	1.03E-07
PAINT R1	HORIZ ONTAL	Paint Bldg Drying Room Reznor -Vent Fan - Horiz.	566150.0	4821179.0	895.0	16.0	293.0	0.0	3.0		8.09E-07	5.51E-05	1.47E-07	1.54E-06
PAINT R2	HORIZ ONTAL	Paint Bldg Wash Room Reznor -Vent Fan - Horiz.	566149.0	4821178.0	895.0	16.0	293.0	0.0	3.0		8.09E-07	5.51E-05	1.47E-07	1.54E-06
BLD10 D1	HORIZ ONTAL	Weldin g Area Sidwall Vent Fan - Horiz.	566144.0	4821332.4	893.7	25.0	293.0	0.0	2.3	3.20E-09	5.39E-08	3.68E-06	9.80E-09	4.33E-07
BLD10 D2	HORIZ ONTAL	Machin e Room Heater 1 vent - Horiz.	566099.6	4821308.2	893.7	18.0	293.0	0.0	0.4		6.74E-08	4.60E-06	1.23E-08	1.29E-07
BLD10 D3	HORIZ ONTAL	Machin e Room Heater 2 vent - Horiz.	566105.9	4821294.3	893.7	22.0	293.0	0.0	0.4		6.74E-08	4.60E-06	1.23E-08	1.29E-07
BLD10 D4	HORIZ ONTAL	Machin e Room Heater 3 vent - Horiz.	566122.2	4821285.2	893.7	22.0	293.0	0.0	0.4		6.74E-08	4.60E-06	1.23E-08	1.29E-07
BLD10 D5	HORIZ ONTAL	Office Heater upstair s1 vent - Horiz.	566097.2	4821313.8	893.7	24.0	293.0	0.0	0.2		3.24E-08	2.21E-06	5.88E-09	6.18E-08
BLD10 D6	HORIZ ONTAL	Office Heater downst airs2 vent - Horiz.	566098.0	4821312.2	893.7	24.0	293.0	0.0	0.2		3.24E-08	2.21E-06	5.88E-09	6.18E-08
BLST1	RAINCA P	Blast Booth Roof Heater Roof	566194.0	4821147.0	896.2	26.2	293.0	0.0	0.5		3.24E-07	2.21E-05	5.88E-08	6.18E-07

Source ID	Stack Rel Type (Beta)	Src Descr	East (X)	North (Y)	Base Elev	Stk Ht	Temp	Exit Vel	Stk Diam	CR6	CADMIUM	FORMALD	ARSENIC	NICKEL
			(m)	(m)	(m)	(ft)	(K)	(fps)	(ft)	lb/hr	lb/hr	lb/hr	lb/hr	lb/hr
		Vent												
BLST2	RAINCAP	Blast Booth Roof Heater Roof Vent	566192.0	4821146.0	896.2	26.2	293.0	0.0	0.5		3.24E-07	2.21E-05	5.88E-08	6.18E-07

All model sources except the PAINTR1 and PAINTR2 sources were conservatively assumed to operated at maximum hourly emission rates despite the fact that actual operations are much more intermittent than that, as documented in the potential to emit calculations. The PAINTR1 and PAINTR2 sources were assumed to operate 20 hours per day, six days per week.

Figure 2 shows the model sources overlaid on the Google Earth aerial photo of the facility. The figure shows the ambient air boundary, the area within the property boundary where public access is controlled, as a dot-dashed line, all facility buildings, and the 13 model sources on Building 8 (one source), Building 1 (five sources), and the Paint Building (eight model sources).

Figure 2a
Model Sources and Model Facility Layout (north half over aerial photo)

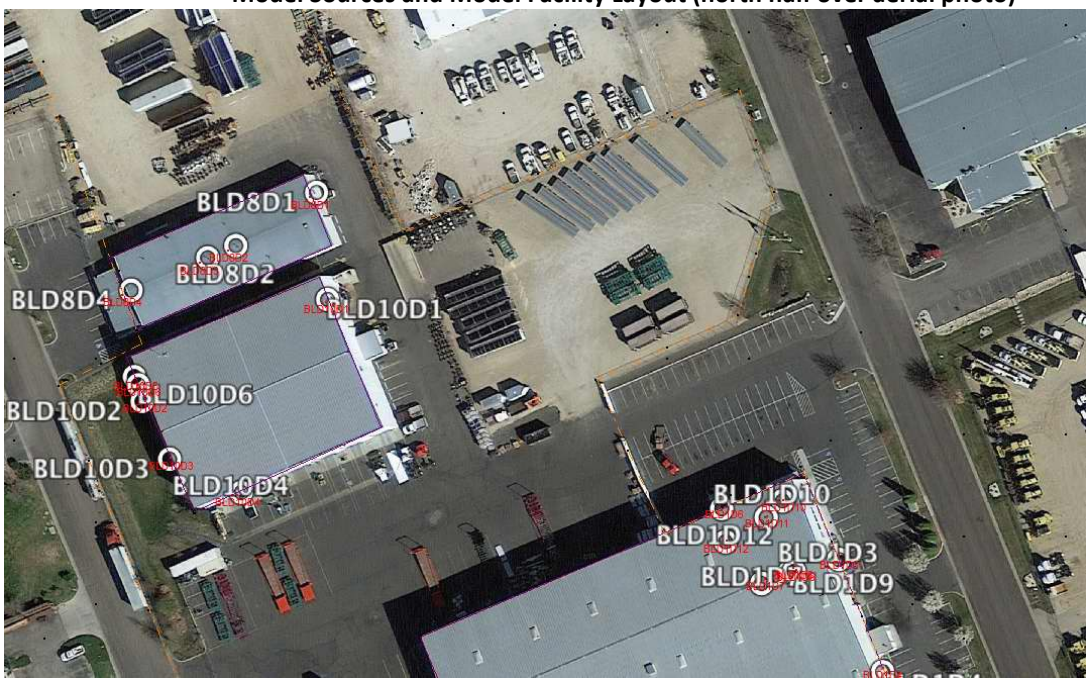

Figure 2b
Model Sources and Model Facility Layout (south half over aerial photo)

Figure 3 shows the UTM coordinate grid in the region, the sources and buildings within the dot-dashed line ambient air boundary, and a series of dots on and around the property line that represent the nearest of over 2700 AERMOD model receptors. The figure, from BeeLine BEEST software, is oriented with N on top and east to the right. Red lettering identifies the model sources. The external purple lines show the outlines of the main facility buildings included in the BPIP downwash analysis.

Figure 3
Model Sources and Model Facility Layout (entire facility without aerial photo)

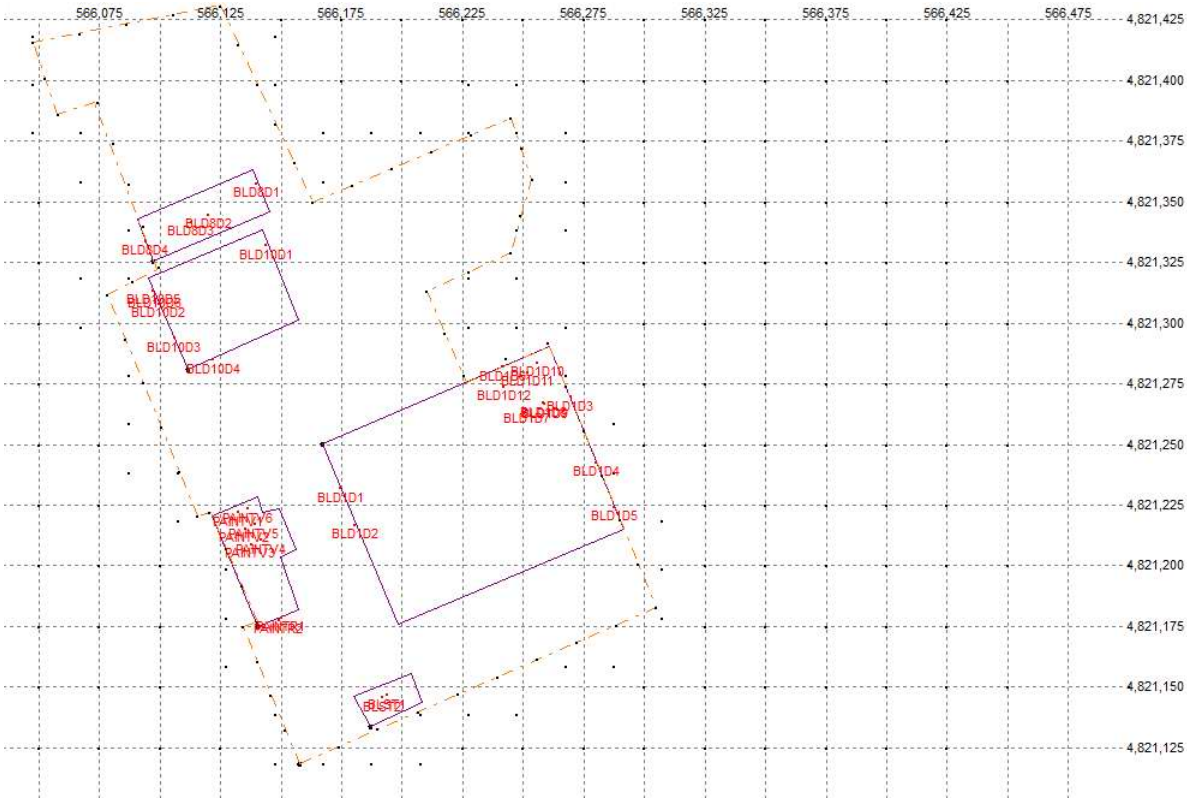

4.1 Criteria Pollutants

No criteria pollutant modeling was performed because no criteria pollutants are potentially emitted above IDEQ BRC thresholds, as documented in the emission inventory. Note that the emission inventory very conservatively shows potential NOx emission rates are below the IDEQ NO_2 BRC threshold.

4.1.1 Modeled Emissions Rates for Significant Impact Level Analyses

.N/A

4.1.2 Modeled Emissions Rates for Cumulative Impact Analyses

N/A

4.1.3 NO_2/NOx Ratio for NOx Chemistry Modeling

As previously noted, the inventory of potential emissions very conservatively shows NO_2 emissions are Below Regulatory Concern (BRC) assuming all NOx emissions are NO_2.

4.1.4 Special Methods for Modeling Criteria Pollutant Emissions

N/A

4.2 Toxic Air Pollutants

TAP emission rates modeled are shown in Table 2. TAP emissions rates have been listed for each TAP that has project cumulative emissions exceeding the applicable EL. Emissions rates in Table 2 are identical to those in the model input file for TAP analyses.

4.3 Emissions Release Parameters

Emission release parameters modeled are shown in Table 2, above, and described below. As described above, five site-wide TAPs are estimated to exceed EL's including arsenic, cadmium, chromium VI, formaldehyde, and nickel.

<u>Chromium VI and Nickel Welding Emission Sources</u>

Site-wide, chromium VI and nickel are TAPs that are estimated to exceed ELs. Chromium VI and nickel are emitted during welding inside the west side of Building 1, the north side of Building 8 and the northeast side of Building 10. Amounts of chromium VI emitted from welding at each building were estimated based on the amounts and composition of welding rods purchased for each building and applying relevant emission factors from EPA AP-42 Table 12.19-1, Table 12.19-2 and San Diego County Air Pollution Control District G99 Gas Metal Arc Wedging (GMAW), Unspecified Electrode, General District-ARB-NASSCO GMAW Emission Estimation Procedure. Annual average hourly emission rates were calculated.

Welding emission sources at Building 1, Building 8 and Building 10 can vent from wall-mounted fan vents and large overhead doors. Since the vents emit whenever the heaters are on and the doors are used intermittently, the emissions from welding are assumed to be exhausted at the wall vents, instead of the doors.

The estimated chromium VI and nickel emissions from welding at Building 1 are split evenly between 2 wall fan vents near the welding area at the west side of Building 1 (BLD1D1 and BLD1D2). Since only the aluminum welding wire, as opposed to the carbon wire, contribute chromium VI and nickel emissions, and since aluminum welding in Building 1 primarily occurs at the west side of the Building, emissions are conservatively assumed to be concentrated in this area and exit the Building from this area. The estimated chromium VI and nickel emissions from welding at Building 8 are emitted at the wall fan vent at the east side of Building 8 (BLD8D1). The estimated chromium VI and nickel emissions from welding at Building 10 are emitted at the wall fan vent at the northeast side of Building 10 (BLD10D1).

Arsenic, Cadmium, Formaldehyde, and Nickel Natural Gas Combustion Emission Sources

Site-wide, arsenic, cadmium, formaldehyde and nickel are TAPs that are estimated to exceed ELs. These TAPs are emitted during natural-gas combustion heaters at Building 1, Building 8, Building 10, the Paint Building and the Blast Building. Amounts of these TAPs emitted from the heaters at each building were estimated based on the maximum capacity of the heaters operating at the schedules described above and emission factors in EPA AP-42 Section 1.4 Natural Gas Combustion (7/98). Annual average hourly emission rates were calculated.

The estimated emissions from the 2 largest heaters are split evenly among the 6 roof-top vent stacks at the Paint Booth Building. The estimated emissions from each of the 2 smaller heaters at the Paint Booth Building are assumed to vent from wall-mounted fan vents on the south side of the Building. The natural-gas combustion emissions from the direct-fired space heaters that vent inside Building 1 can vent from five wall-mounted fan vents and large overhead doors. Two of these wall-mounted vents also vent welding emissions. Since the vents emit whenever the heater is on and the doors are used intermittently, the emissions from welding are assumed to be exhausted at the wall vents, instead of the doors.

5.0 Modeling Methodology

Table 3 summarizes the key modeling parameters used in the impact analyses.

Table 3. MODELING PARAMETERS

Parameter	Description/Values	Documentation/Addition Description
General Facility Location		The facility is located in an area that is attainment or unclassified for all criteria air pollutants
Model	AERMOD	AERMOD with the PRIME downwash algorithm,.
Meteorological Data	Boise surface data and upper air data	The meteorological model input files for this project were provided by and recommended as most representative for this project by IDEQ, as described in the IDEQ modeling protocol and verified by IDEQ's approval of that protocol.
Terrain	Considered	See section 5.3 below
Building Downwash	Considered	BPIP-PRIME was used to evaluate building dimensions for consideration of downwash effects in AERMOD.
NOx Chemistry	None	.
Receptor Grid	**Significant Impact Analyses**	
	Grid 1	20-meter spacing along the ambient air boundary
	Grid 2	25-meter spacing for at least 100 meters from the ambient air boundary
	Grid 3	50-meter spacing for at least 300 meters from the ambient air boundary
	Grid 4	100-meter spacing for at least 500 meters from the ambient air boundary
	Grid 5	250-meter spacing for at least 1500 meters from the ambient air boundary
	NAAQS Analyses as described in section 5.3	
	TAPs Analyses as described in section 5.3	
	Grid used for Significant Impact Analyses as described in section 5.3	

5.1 Model Selection

The model selection and justification is documented in Section 3.0, which is unchanged from the modeling protocol description IDEQ approved. The current version of AERMOD was used. Non-default options were not used, though as noted space heating sources were limited to 5040 and 4380 hours per year.

5.2 Meteorological Data

Five years of meteorological data from 2008 – 2012 from the Boise, Idaho provided by IDEQ and recommended as the most representative data to support modeling at this site were utilized in the

modeling analysis with the actual base elevation for the Boise data set, consistent with the IDEQ approved modeling protocol.

5.3 Effects of Terrain

Figure 3 shows the model facility layout and inner receptor network. Base elevations for all buildings and receptors were calculated from with USGS NAD83 UTM coordinate DEM files using BeeLine BEEST software to run EPA's ASERMAP program. All source base elevations were set to match those building base elevations. The UTM coordinate grid in the region, the sources and buildings within the dot-dashed line property boundary, and a series of dots on and around the property line that represent the nearest of over 2700 AERMOD model receptors. The figure, from BeeLine BEEST software, is oriented with N on top and east to the right. Red lettering identifies the model sources. The external black lines show the outlines of the main facility buildings included in the BPIP downwash analysis.

5.4 Facility Layout

Figure 3 shows a scaled depiction of the facility layout, clearly showing the ambient air boundary, the inner and outer facility fence lines, and the facility's main building. All figures are in true scale, from the BEEST modeling software. Figure 2 shows the details in the vicinity of the facility main building, including all model sources. The Google Earth aerial photo base-map in Figures 1 and 2 verify model gridding and provides a visual cross reference between model parameters and physical layout.

Figure 4 Model Receptor Network

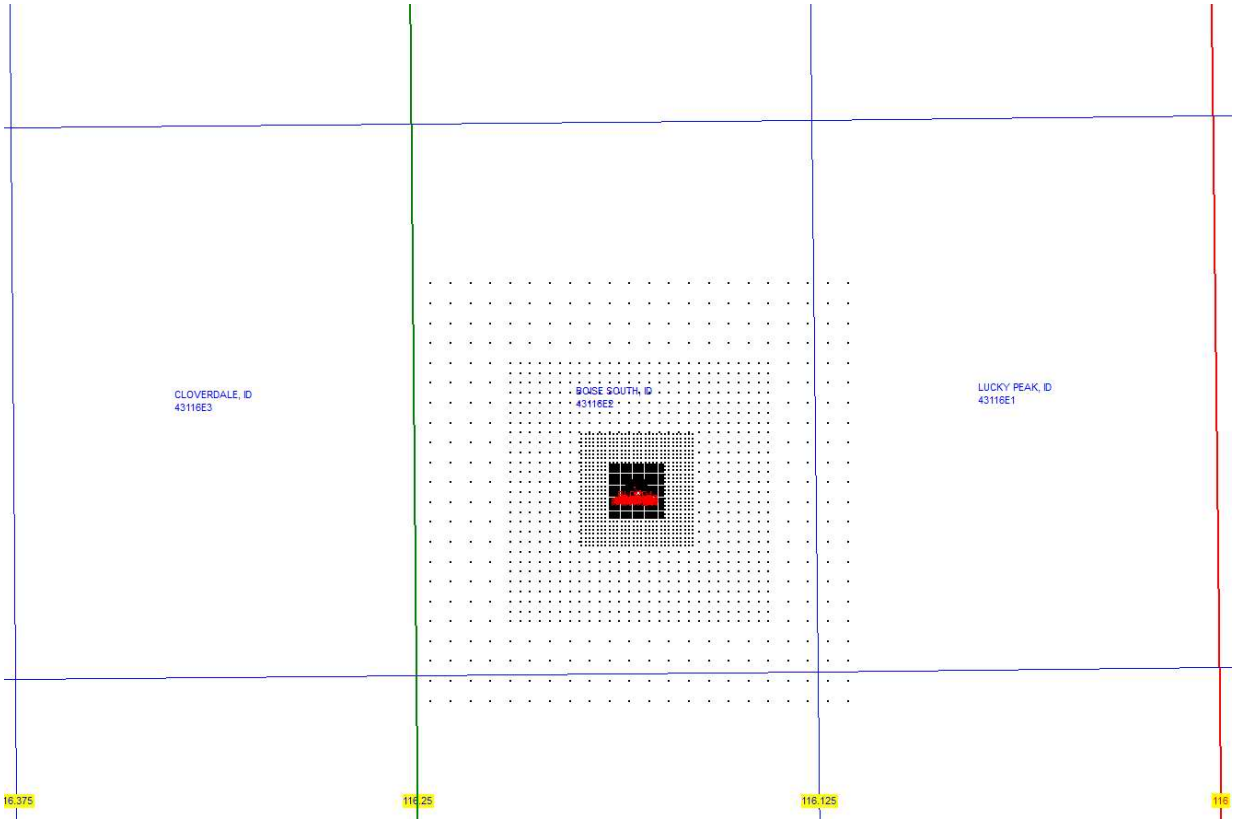

5.5 Effects of Building Downwash

Figures 3 and 4, from BeeLine BEEST software, are oriented with N on top and east to the right. Red lettering identifies the model sources. The external purple lines show the outlines of the buildings on the facility. All five buildings were conservatively included in the BPIP-Prime downwash analysis, assuming flat roofs at roof peak height. All BPIP-Prime input and output files are included in the zipped electronic files accompanying this modeling report. Base elevations for all building based sources were set to the base elevation of the building.

5.6 Ambient Air Boundary

The property is located in a business park in south Boise. The dashed line on Figure 2 and dot-dash line on Figure 3 show the ambient air boundary, a line within the facility property beyond which public access is controlled. Public accessible portions of the facility property such as public parking lots and accessible building fronts are considered ambient air because public access there is not prevented. The ambient air boundary is fenced or solid building sides, a continuous series of physical barriers around

the interior of the facility. Employees are trained to notice and discourage unauthorized access. Google Earth aerial photos were used to confirm model gridding. This can be seen visually on Figure 2.

5.7 Receptor Network

AERMOD model receptors were placed with spacing meeting or exceeding IDEQ requirements: at 20 meter intervals along the ambient air boundary, and at 25 meter intervals for at least 100 meters beyond. Receptors were then placed at 50 meter intervals to 500 meters, and 100 meter intervals out to 1200 meters, at 250 meter density out to 3 kilometers, and at 500m intervals out to 5 km. All required elevation information, including for sources and receptors, was calculated from the NED elevation data using AERMAP through the Bee-Line BEEST processing software.

The model predicted maximum facility impacts for all model runs occurred on the ambient air boundary or in its immediate vicinity, well within the 25 meter grid density, for all modeling analyses. Model predicted maximum impacts dropped off steadily toward the end of the receptor network. The receptor networks employed in the modeling was consistent with IDEQ modeling guidance, exceeding that guidance as far as receptor spacing and density, to ensure that the analysis meets or exceeds receptor network requirements and captures the maximum impact from the facility. Therefore, no supplemental receptor network or expansion of the model domain was required or included.

5.8 Background Concentrations

No background concentrations are applied in IDAPA TAP impact analyses. The regulations limit impact from emission increases associated with the proposed action only.

5.9 NOx Chemistry

The emission inventory conservatively shows that potential NOx emissions are below the BRC IDEQ threshold for NO2 emissions. Therefore, no NO2 modeling is required, and the NO2/NOx ratio is not a concern.

6.0 Results and Discussion

This section of the Modeling Report shows predicted model maximum TAP impacts are safely below IDAPA 58.01.01.586 ELs, thereby meeting IDEQ impact limits.

6.1 Criteria Pollutant Impact Results

No criteria pollutant modeling was performed because no criteria pollutants are potentially emitted above IDEQ BRC thresholds.

6.1.1 Significant Impact Level Analyses

N/A

6.1.2 Cumulative NAAQS Impact Analyses

N/A

6.2 TAP Impact Analyses

Table 4 provides results for TAP impact analyses in accordance with the IDEQ approved modeling protocol and lists the associated impact limits.

Table 4. RESULTS FOR TAP IMPACT ANALYSES

TAP	Averaging Period	Maximum Modeled Impact ($\mu g/m^3$)[a]	AAC or AACC ($\mu g/m^3$)
arsenic	annual	0.00004	0.00023
chromium VI	annual	0.00004	0.000083
cadmium	annual	0.00019	0.00056
formaldehyde	annual	0.01327	0.077
nickel	Annual	0.00044	0.0042

a. Micrograms/cubic meter.

Table 4 results show that for all TAPs model predicted impacts are below their applicable IDAPA 585 AACCs. The maximum predicted annual average impact for each IDAPA 586 pollutant occurred in 2011 on the western property boundary.

Only two TAPs had predicted maximum impacts exceeding 20% of the applicable AACC, cadmium and chromium VI. Predicted maximum impacts for those two TAPs are 33.9% of the cadmium AACC and 48.2% of the chromium VI AACC. Figure 5, below, shows all receptors with maximum predicted impacts for chromium VI in 2011 (the year with the highest predicted impacts) above 0.00001 ug/m3 (12.0% of the applicable AACC). The maximum and the very few receptors with predicted maximum impacts reaching 12% of the AACC are shown to occur only within100 meters of the property boundary.

Figure 5 Model Predicted Maximum Impacts

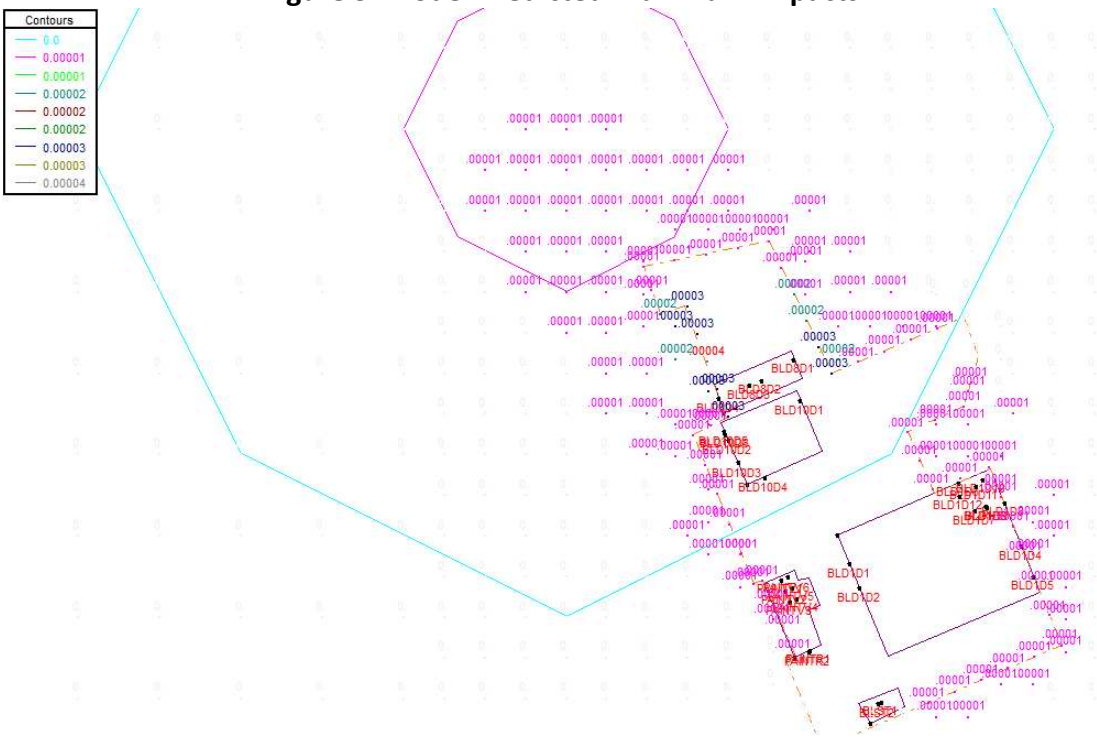

7.0 Quality Assurance/Control

Raw model inputs were verified, and that verification documented here. Air dispersion analyses and reports have been prepared by air quality professionals experienced in dispersion modeling and familiar with the IDEQ approved modeling protocol, and have been peer reviewed for accuracy and reasonableness of data input and output.

8.0 Electronic Copies of the Modeling Files

Electronic copies of all input, output, and support modeling files necessary to duplicate the AERMOD model results, and graph files showing distribution of maximum impacts are provided in a zipped electronic file with this modeling report submittal. Those files include:

- All BEEST files which document and drive the modeling analyses
- WT Business Way MT 091216_YY_PP.ext, where:
  PP identifies the TAP being modeled,
  YY = the year modeled, from 2008 to 2012, and
  ext = .DTA for AERMOD input files, .LST for AERMOD model output files, and .BST to provide the BEEST file to support potential complete duplication of all analyses
- Associated AERMAP and BPIP files input and output files
- All model output graph files clearly labeled

Attachment A

IDEQ Protocol Approval, and *our responses to IDEQ protocol approval comments (in italics)*

STATE OF IDAHO
DEPARTMENT OF
ENVIRONMENTAL QUALITY

1410 NORTH HILTON, BOISE, ID 83706 · (208) 373-0502

C. L. "BUTCH" OTTER, GOVERNOR

JOHN TIPPETS, DIRECTOR

October 6, 2015
Mark Torf
Torf Environmental Management on behalf of Western Trailer Co.
Boise, Idaho

Re: Modeling Protocol for the Western Trailer Co. facility in Boise, Idaho

Dear Mark:

DEQ received your revised dispersion modeling protocol submitted via email on September 21, 2015. The modeling protocol was submitted by Mr. Mark Torf of Torf Environmental Management on behalf of Western Trailers (WT) facility located in Boise, Idaho. This protocol was written in response to a previous protocol sent August 13, 2015 and denied in a September 9, 2015 letter. The modeling protocol proposes methods and data for use in the ambient impact analyses of a Permit to Construct (PTC) application for an existing facility in order to show compliance for their facility. DEQ has the following comments:

- Comment 1: In the protocol submitted August 13, 2015, there were references to emission estimates for criteria pollutants being below Level I and Level II modeling thresholds with

respect to modeling applicability, but no emissions were provided. The protocol submitted on September 21, 2015 provided emission estimates and states that all emissions for criteria pollutants are below BRC (Below Regulatory Concern) levels and therefore no modeling will be required. The applicant should remain aware that it will be the decision of the permit writer to review and determine project emissions, and therefore compare them to BRC levels. If those emissions reach or exceed BRC levels, then emissions will need to be compared to Level I modeling thresholds , as defined in Table 2 in *State of Idaho Air Quality Modeling Guideline*[1]to determine modeling applicability.

Inventory of Potential Emissions included with this permit application documents criteria pollutant emissions are BRC

- Comment 2: Documentation and justification of release parameters must be provided in the application. Refer to Section 3.4.3 of the *State of Idaho Guideline for Performing Air Quality Impact Analyses*, September 2013. Simply stating that values are "manufacturer data" does not constitute adequate documentation and/or justification. DEQ requests that the application describe how the values were obtained (measurement, similar source, combustion evaluation, fan curves, etc.). If values were obtained from an equipment/engineering firm, then those forms, specification sheets, etc. provided by the firm should be included in the application as documentation for the values used in the modeling analyses. The protocol discusses treatment of vent sources for exhausting emissions from welding, cutting, and heating activities being treated as volume sources in Buildings 1, paint, and 8. If these sources are being vented with forced fan exhaust (and the exhaust flow can be reasonably quantified) , as is stated in section 4.0 of the protocol, then these sources should be treated as point sources to account for this buoyancy effect. When modeled as a point source, if they vent in the horizontal direction, then the Horizontal Release BETA option in AERMOD should be used along with the actual effective diameter, flow rate, and temperature.

Documentation supporting model input data is included in the Tables submitted with the application narrative and summarized in Table 8-1 of the application narrative. The model output data are listed in Table 4 of this Model Protocol Report.

This modeling analysis and report documents compliance with applicable IDEQ impact limits using the BETA option POINTHOR for the fan driven wall vents proposed in the protocol to be modeled as volume sources. The protocol included complete documentation to support a compliance demonstration modeling those wall vents as volume sources.

- Comment 3: Descriptions of the facility process are generally adequate. The ambient air boundary, as stated in the State of Idaho Guideline for Performing Air Quality Impact Analyses, should be defined by an area where the public access is precluded. This includes separation from areas of habitation or activities by people not employed by the facility. If a

physical barrier is not used to preclude public access from areas excluded from ambient air, then the application must thoroughly describe the methods used to practically preclude access.

As documented in Section 5.6, the ambient air boundary used in this application is an area completely representing fences or solid building sides within the facility property.

- Comment 4: It should be noted that in the pre-application meeting a secondary location with minor sources was discussed. There needs to be at least a description of this site and a justification of why there is no modeling requirement to assessing impacts from the sources at this secondary location. If the emissions from this facility are included in this permit then the emissions from both facilities will need to be included together for modeling applicability.

The only other Western Trailers facility is located miles away to the east. Any permitting actions there would be independent of permitting actions for this Business Way facility.

- Comment 5: DEQ has recently developed a modeling report template form for consultants/applicants to use when submitting modeling analyses. An electronic copy of this template should have been attached to the email delivering this protocol approval notice. DEQ now **requires** that this template be used for the submitted modeling analyses.

This report utilizes that format.

DEQ modeling staff considers the submitted dispersion modeling protocol, with consideration and resolution of the additional items noted above, to be approved. It should be noted, however, that the approval of this modeling protocol is not meant to imply approval of a completed dispersion modeling analysis. Please refer to the *State of Idaho Air Quality Modeling Guideline*, which is available on the Internet at http://www.deq.state.id.us/air/permits_forms/permitting/modeling_guideline.pdf, for further guidance.

DEQ modeling staff requests submission of electronic copies of all modeling input and output files (including BPIP and AERMAP input and output files) with an analysis report. Also, please include with the application materials a copy of the protocol and this protocol approval in the appendix of the application. If you have any questions, please call at 208 373 0220.

Sincerely,

Thomas Swain
Analyst 3 , Air Modeling
Idaho Department of Environmental Quality
208 373-0220
thomas.swain@deq.idaho.gov

Appendix E

Computer Disc Containing:
Complete Application Document – Adobe Acrobat Format
Modeling Files – Zip compression
Emission Inventory MS Excel Worksheets