August 1, 2013

M E M O R A N D U M

TO: R. Todd Crutcher, P.E., Engineering Manager
Boise Regional Office

FROM: Valerie A. Greear, P.E., Staff Engineer
Boise Regional Office

SUBJECT: Staff Analysis for Reuse Permit I-008-05
J.R. Simplot Company, Caldwell Plant - Industrial Wastewater

1.0 Purpose

The purpose of this memorandum is to state the basis for the terms and conditions in draft Reuse Permit I-008-05 (formerly LA-000008-04) for the J.R. Simplot Company for the industrial wastewater treatment and reuse system at their Caldwell plant. This Staff Analysis satisfies the requirements of IDAPA 58.01.17.400.05 of the *Recycled Water Rules* for processing reuse permit applications. This analysis supplements the Staff Analysis written for draft permit LA-000008-04, dated May 18, 2011.

The Major Permit Modification Request prepared by HDR Engineering, Inc., received on November 2, 2012; the 2012 Annual Report prepared by HDR Engineering, Inc., received on February 28, 2013; and correspondence with the J.R. Simplot Company were used in the development of this document and the draft reuse permit. Information submitted on June 15, 2012 in the Preliminary Engineering Report for the Process Water Treatment and Return Plant, prepared by CDM Smith, and the subsequent Plans and Specifications were also referenced. Plans and Specifications for revisions to the irrigation system prepared during 2012 by SPF Water Engineering, LLC, were also referenced. Historical file review was also conducted.

2.0 Process Description

J.R. Simplot Company (Simplot) operates a potato processing company in Caldwell, Idaho. The potato processing and production line is being expanded, with a corresponding change in the quantity and quality of wastewater produced. New wastewater treatment processes are being added, and the level of treatment capability will greatly increase. A flow diagram of the new wastewater treatment train is included in Appendix A of this document. The new treatment process adds a membrane bioreactor (MBR) with biological nutrient removal and activated sludge, ultrafiltration membranes, and reverse osmosis (RO). The existing plant will remain in use, which consists of screening, dissolved air flotation, primary clarification, a bulk volume fermenter (BVF), and sludge dewatering centrifuges. The treatment of waste silt water, generated from cleaning the potatoes before they enter the processing plant, is treated separately consisting of clarification and lagoon storage, and will remain unchanged.

The RO reject water will be transferred to evaporation lagoons where it will be concentrated using spray evaporators. Concentrated water will then be transferred to drying beds for further concentration, and

then the salts and solids will be periodically removed for landfill disposal. Sludge from the bioreactors will be dewatered using centrifuges and landfilled.

3.0 Summary of Events

Simplot approached the Department of Environmental Quality (DEQ) in late 2011 to discuss planned changes to their production facility and the associated changes to the wastewater treatment plant. The upgrades will change the effluent quality and add a new recycled water beneficial use. Therefore a major modification to the reuse permit was necessary as stipulated by the *Recycled Water Rules*, IDAPA 58.01.17.700.02. Subsequent to receiving the application for a major modification, DEQ determined that due to the extent of the changes, a new permit would be issued rather than a modification to the current permit.

The Preliminary Engineering Report (PER) and the plans and specifications for the new wastewater treatment plant were approved by DEQ through a design-build process during 2012. The new wastewater treatment plant will be operational in the fall of 2013.

4.0 Discussion

This discussion focuses only on changes to conditions in the current permit. An overall discussion of the reuse site, including environment assessments, is contained within the May 18, 2011 Staff Analysis for the draft reuse permit LA-000008-04.

4.1 Effluent Characteristics

The PER (June 7, 2012) contains a thorough discussion of the process changes and anticipated effluent characteristics and flows. These characteristics are summarized in the following table from Appendix B of the application for permit modification (November 2, 2012). According to a discussion in Section 3.5.2 of the PER, water for land application will consist of a combination of MBR permeate and RO permeate with a primary purpose of not over-applying Total Dissolved Solids (TDS).

Table 1. New Wastewater Treatment Plant Effluent Quantity and Characteristics (from the Preliminary Engineering Report, as presented in Appendix B of the application for permit modification)

	Ultrafiltration Discharge		Reverse Osmosis Discharge		Silt Water		Total Discharge		
Flow Average (MGD)	0.66		0.58		0.30		1.54		
Parameter	mg/l	lbs/day	mg/l	lbs/day	mg/l	lbs/day	mg/l	lbs/day	lbs/yr
Total COD	67	368.79	7	33.86	350	875.70	99.5	1,278	396,290
NH_3-N	<1	0.00	<1	0.00					
TKN	6	33.03	1	4.84	17	42.53	6.3	80	24,923
TN	53	291.73	9	43.53	17	42.53	29.4	378	117,119
Nitrate-N	47	258.7	8	38.69	0	0	23.1	298	92,196
Total Phosphorus	1.82	10.00	0.21	1.00	9	22.52	2.6	34	10,391
TDS (NVDS)	1600	8807.4	85	411.16	350	875.70	785.9	10,094	3,129,110

a. Based on a 310 day operating year (including process and cleanup flows)
b. MGD = million gallons per day; COD = chemical oxygen demand; NH3-N = ammonia as nitrogen; TKN = total Kjeldhal nitrogen; TN = total nitrogen; TDS = total dissolved solids; NVDS = non-volatile dissolved solids.
c. Nitrate-N was calculated for this analysis as TN - TKN.

Table 2 shows the current flows and effluent characteristics as documented in the 2012 annual report (February 28, 2013). The total discharge was 670 million gallons annually (MGA), or an average of 1.84 million gallons per day (mgd). Silt water is currently applied to only one management unit.

Table 2. Current Wastewater Treatment Plant Effluent Quantity and Characteristics (from hydraulic loading reports and constituent analysis in the 2012 Annual Report)

	Process Water		Silt Water	
Flow	637 MGA (average 1.75 MGD)		32.6 MGA (average 0.09 MGD)	
Parameter	mg/l[1]	lbs/day[2]	mg/l[1]	lbs/day[2]
Total COD	1083	10461	140	100
NH_3-N	--		--	--
TKN	105	3072	8.60	6.41
TN	0.152	3074	0.18	6.57
Nitrate-N	105	1.58	8.78	0.15
Total Phosphorus	34.3	514.8	7.84	5.53
TDS (NVDS)	792	11831	360	263

[1] Concentrations in mg/L are the average of all samples taken throughout the year (not monthly averages).
[2] Loadings in lbs/day are calculated from the monthly average concentration and monthly average flow.

Similarly, Table 3 shows the current loading rates in lb/acre.

Table 3. Individual management unit loading rates as reported in the 2012 Annual Report

Management Unit Acres	Acres	N (process water)	N (silt water)	N (fertilizer)	**N (TOTAL)**	P (process water)	P (silt water)	**P (TOTAL)**	NVDS (process water)	NVDS (silt water)	**NVDS (TOTAL)**
		lbs/acre				lbs/acre			lbs/acre		
MU-000809	130.1	409	0	58	**467**	118	0	**118**	2636	0	**2636**
MU-000810	127.7	350	0	106	**456**	107	0	**107**	2427	0	**2427**
MU-000811	95.3	431	0	96	**527**	128	0	**128**	2911	0	**2911**
MU-000815	201.5	331	0	0	**331**	102	0	**102**	2421	0	**2421**
MU-000816	136	448	0	117	**565**	137	0	**137**	3130	0	**3130**
MU-000817	174.2	365	0	108	**473**	113	0	**113**	2595	0	**2595**
MU-000819	221.2	379	0	83	**462**	118	0	**118**	2767	0	**2767**
MU-000820	118.4	262	0	0	**262**	78.6	0	**78.6**	1853	0	**1853**
MU-000821	120.8	296	0	18	**314**	88.7	0	**88.7**	2046	0	**2046**
MU-000822	109.2	435	0	84	**519**	140	0	**140**	3236	0	**3236**
MU-000823	70.7	0	33.5	67	**100**	0	28.2	**28.2**	0	1343	**1343**
MU-000825	217.9	403	0	37	**440**	115	0	**115**	2564	0	**2564**
Weighted Average		358	1.37	62.4	**422**	108	1.16	**109**	2488	55.1	**2543**

For a comparison, the anticipated loadings, assuming that the characteristics of effluent will be as presented in Table 1 and assuming equal loading to all management units will be as shown in Table 4 below.

Table 4. Anticipated Loadings after process changes compared to the weighted average loadings reported in the 2012 Annual Report

Basis	Chemical Oxygen Demand lb/acre/day	Total Nitrogen lb/ac/yr	Total Phosphorus lb/ac/yr	Non-volatile Dissolved Solids lb/ac/yr
2012 Weighted Average	6.11	422	109	2,543
Proposed, Assuming Equal Loading to all Management Units	0.6	54	5	1,451

As can be seen in Table 4, the proposed loadings are less than the current loadings. In 2012, Simplot reported site average uptakes of total nitrogen, total phosphorus and non-volatile dissolved solids (NVDS) of 310 lb N/acre, 60 lb P/acre, and 3,792 lb ash/acre.

4.2 Environmental Discussion

Discussions of soil and surface water are adequately covered in the 2011 staff analysis for draft permit LA-000008-04. The following is additional discussion about ground water quality.

There are 35 monitoring wells for this site that are sampled quarterly for the typical constituents. Of these, six are up-gradient, seven are down-gradient, and two are off-site down-gradient wells.

HDR Engineering, Inc., updates a statistical analysis of the monitoring wells yearly in the annual reports, and included an analysis in the application for a permit modification. The statistical evaluations utilize the 2009 DEQ *Statistical Guidance for Determining Background Ground Water Quality and Degradation*, as well as the 2009 EPA *Statistical Analysis of Groundwater Monitoring Data at RCRA Facilities, Unified Guidance* to conduct the statistical analysis which is summarized as follows. The analyses look at data independence, seasonality (Kruskal-Wallis), secular trend analysis (LOWESS, Mann-Kendall), and test for distribution (Lilliefors Test). Statistically similar datasets were identified for pooling of background wells, and the appropriate Upper Prediction Limit (UPL) was determined. Using the UPL, the up-gradient and down-gradient wells were compared.

The following table from the application for permit modification shows a comparison of the up-gradient UPL and average concentrations in down-gradient wells for the acreages north and south of Simplot Boulevard. Secular trends are also identified.

Table 5. Comparison of up-gradient well Upper Prediction Limits (UPL) and down-gradient well average data (12 data points from quarterly samples between 2009 and 2012) for the land north and south of Simplot Boulevard

Table 2-29. Comparison of Up-gradient Well UPLs with Down-gradient Wells North of Simplot Boulevard

	Nitrate-N (mg/L)		TDS (mg/L)		Dissolved Fe (mg/L)		Dissolved Mn (mg/L)		Total P (mg/L)	
Up-Gradient Wells	MW-12	MW-14	MW-12	MW-14	MW-12	MW-14	MW-12	MW-14	MW-12	MW-14
Calculated UPL	0.59		357	237	0.30	1.5	0.93	1.7	0.19	2.7
2011 Averages – Down-Gradient Wells	MW-1 = 1.3 MW-2 = 0.48 MW-6 = ND MW-18 = ND MW-30 = 0.30 (- trend)[1] MW-31 = 0.25 (- trend)		MW-1 = 315 MW-2 = 287 MW-6 = 247 MW-18 = 280 MW-30 = 445 MW-31 = 222		MW-1 = ND MW-2 = 0.025 MW-6 = 0.093 MW-18 = 1.2 MW-30 = ND MW-31 = ND		MW-1 = 0.10 MW-2 = 0.080 MW-6 = 0.78 MW-18 = 1.2 MW-30 = 0.13 MW-31 = 0.072 (+ trend)		MW-1 = 0.19 (- trend) MW-2 = 0.031 MW-6 = 0.057 (- trend) MW-18 = 0.26 (- trend) MW-30 = 0.048 (- trend) MW-31 = 0.33	

[1] Trend based on n=12; ND = Non-Detect

Table 2-30. Comparison of Up-gradient Well UPLs with Down-gradient Wells South of Simplot Boulevard

	Nitrate-N (mg/L)		TDS (mg/L)		Dissolved Fe (mg/L)		Dissolved Mn (mg/L)		Total P (mg/L)	
Up-Gradient Wells	MW-27	MW-37	MW-27	MW-37	MW-27	MW-37	MW-27	MW-37	MW-27	MW-37
Calculated UPL	3.7	12	1040	739	0.068		0.025		0.11	0.13
2011 Averages – Down-Gradient Wells	MW-2 = 0.48 MW-30 = 0.30 (- trend)[1] MW-31 = 0.25 (- trend) MW-38 = 0.28 MW-39 = 4.8		MW-2 = 287 MW-30 = 445 MW-31 = 222 MW-38 = 637 (+ trend) MW-39 = 676		MW-2 = 0.025 MW-30 = ND MW-31 = ND MW-38 = 1.4 MW-39 = ND		MW-2 = 0.080 MW-30 = 0.13 MW-31 = 0.072 (+ trend) MW-38 = 0.35 MW-39 = 0.88		MW-2 = 0.031 MW-30 = 0.048 (- trend) MW-31 = 0.33 MW-38 = 0.74 (- trend) MW-39 = 0.18	

[1] Trend based on n=12; ND = Non-Detect

HDR Engineering, Inc. concludes that the down-gradient wells are not statistically significantly different than the up-gradient wells at this point with a few exceptions, as can be seen in Table 5. For most of those wells, the nitrate and TDS concentration levels are below the ground water quality standards in the Idaho *Ground Water Quality Rules*, IDAPA 58.01.11, (10 mg/L and 500 mg/L respectively). Wells 38 and 39 may need further analysis in the future if increasing trends continue, but it should be noted that according to ground water flow diagrams these wells appear to be influenced by former land and livestock areas and other offsite land use, in addition to the land application acreage. A map showing ground water flow direction is included in Appendix B of this document.

The presence of iron and manganese is indicative of historic flood irrigation dominated agriculture. Simplot changed their practices from flood irrigation to sprinkler irrigation, reduced hydraulic loading, and implemented anaerobic digestion, all of which should improve iron and manganese concentrations over time. Phosphorus levels show decreasing trends in ground water and soil, and have been and continue to be addressed in accordance with previously submitted studies as required by DEQ. One such study is in progress with the intent of monitoring and assessing the onsite drains, and then mitigating and reducing phosphorus loading to the Boise River. This is discussed in Section 5 below, and a map showing canals and drains is included for reference in Appendix C.

Nitrate loading was a concern in the past, but is being addressed by the facility through managed cropping plans that are submitted annually to DEQ for review and approval. In 2010 the facility introduced double cropping with triticale and corn, which appears to have also contributed to a substantial increase in NVDS uptake.

The changes in treatment with the resultant reduction in effluent constituent concentrations are expected to improve ground water quality over time. It is recommended that the facility continue to conduct statistical trend analyses and comparisons annually to identify trends, and to fine tune management practices and continue to improve ground water quality.

5.0 Permitting Discussion

The following sections outline changes made to the terms and conditions in the draft permit. Terms and conditions that are unchanged from the current permit and remain applicable to the facility are not addressed in this document.

Section 2

A responsible official was designated, and the requirements and responsibilities of this individual are defined in section 6.1.3. The responsible official may designate an authorized representative to carry out these duties.

Section 3

The following is a summary of compliance activities from the current permit, LA-000008-04, and those recommended for inclusion in the new draft permit I-008-05.

Table 6: Status of Compliance Activities in LA-000008-04

	Description	Discussion and Status
CA-008-01	Site Management Plans:	
	Plan of Operation	The PO was submitted as part of the permit modification application package, and will need updated as appropriate, which discussed in Table 7 below.
	Waste Solids Management Plan Buffer Zone Plan	These plans were submitted on August 1, 2012. The plans will need updated as

	Odor Management Plan	appropriate, as discussed in Table 7 below.
	Crop Management Plan Nitrogen Management Plan	Both plans are to be submitted annually by March 31.
CA-008-02	Sampling and Analysis Plan QAPP	These were submitted as part of the permit modification application package. A modified condition is recommended for inclusion in the draft permit, as discussed in Table 7.
CA-008-03	Phosphorus Reduction and Mitigation Plan	These activities are in progress and should continue in the new permit. The plan was submitted on December 1, 2011, and was approved.
CA-008-04	Corner Utilization Plan	During 2012 the irrigation setup was completely reconstructed, and the corners were utilized with DEQ approval. This condition is not necessary to carry forward into the new permit
CA-008-05	Land and Livestock Fields Management Plan	Some land and livestock fields are being cropped, but reuse water is not yet being applied. This activity should carry forward into the new permit.
CA-008-06	Linear Irrigation System Conversion	During 2012 the irrigation setup as completely reconstructed, and there were no linear irrigation system conversions. This condition is no longer necessary.

Table 7: Compliance Activities Recommended for Inclusion in I-008-05

	Description	Discussion and Status
CA-008-01	Site Management Plans:	
	Plan of Operation Buffer Zone Plan	These plans were submitted as part of the permit modification application package, and will need updated as appropriate following permit issuance. Specific discussion requirements are included in the draft permit.
	Waste Solids Management Plan Odor Management Plan	These plans were submitted on August 1, 2012. The plans will need updated as appropriate following permit issuance.
	Crop Management Plan Nitrogen Management Plan	Both plans are to be submitted annually by March 31.
CA-008-02	Quality Assurance Project Plan (QAPP)	As noted in Table 6, a QAPP was submitted as part of the permit application package. The standard requirements for a QAPP have changed since that time, and the facility QAPP will need updated to

		reflect these new requirements.
CA-008-03	Phosphorus Reduction and Mitigation Plan	The activities are in progress, and the requirements should carry forward in the new permit.
CA-008-04	Land and Livestock Fields Management Plan	Some land and livestock fields are being cropped, but reuse water is not yet being applied. This activity should carry forward into the new permit.
CA-008-05	Seepage Testing	Two sets of lagoons need to be seepage tested before they are put into use. There are three evaporation lagoons which can be hydraulically isolated or connected. Therefore they can be seepage tested individually or as one unit. There are two emergency storage lagoons which also need seepage tested prior to use. The drying beds associated with RO permeate brine were determined to not require seepage testing due to the low moisture content of the water and the shallow depth of that water. The process pond was last tested in July of 2006, and it is recommended that it be tested again in 2016. The silt pond was tested in July, 2011, after dredging. Retesting the silt lagoon is not recommended as a requirement during this permit term.
CA-008-06	Monitoring Well Replacement	Monitoring wells MW-3, MW-19, MW-21, MW-23 and MW-39 are located within the irrigation coverage area in the management unit configuration. All of these wells must be properly abandoned. MW-19, MW-21 and MW-39 must be replaced in a pre-approved location. The conditions also contains a requirement to reassess the monitoring well network in light of irrigation reconfiguration, new processes, and because of changes over the last decade since this was last done.
CA-008-07	Landscape Area Map	The permit allows the option of irrigating the landscaping around the new processing plant with RO Return water. This activity requires that a map of these areas be submitted which outlines acreages, irrigation layout, landscaping (plants), and runoff prevention measures.
CA-008-08	Pre-Application Workshop	This condition reflects the new DEQ policy that permittees attend a pre-

		application workshop one year prior to permit expiration, as is recommended in the *Recycled Water Rules*.
CA-008-09	Renewal Permit Application	This condition documents the *Recycled Water Rules* requirement to submit a permit renewal application six months prior to permit expiration.

Section 4

The land application acreages were updated in section 4.1 to reflect the new irrigation setup, which is shown in Appendix D and detailed in Appendix E of this document. Management unit MU-000825 was essentially split into two management units labeled MU-000825 and MU-000826; therefore the non-growing season (NGS) hydraulic loading rates were recalculated using the same methodology as that discussed in the previous staff analysis and added to section 4.2.

Three NGS hydraulic loading limits were changed from those in the current permit. The monitoring well on the upgradient side of MU-000821, MW-27, shows consistently shallow ground water with the average of 2009-2012 data of 4.85 feet below the top of the well casing. The fields to the east side of this unit, fields 821.4 and 821.5 (50 acres currently permitted at 7.04 in/NGS, or 9.6 MG) located between the border and the drain, are most likely not suitable for nongrowing season application and have been removed from the NGS application acreage. The monitoring well on the down-gradient side of MU-000809, MW-2, also shows shallow ground water, with a four-year average of 4.63 feet below the top of the well casing. MW-5 is up-gradient of MW-2, and has an average water level of 6.45. The acreage between these wells, fields 809.8-809.11 (46.8 acres at 5.44 in/NGS, or 6.9 MG) have also been removed from the NGS acreage based on these water levels.

Management unit MU-000824 also appears to have shallow ground water. The available water holding capacities in the National Resource Conservation Service (NRCS) soil descriptions are typically based on a root zone of 60 inches, or five feet. The wells on either side of this unit, S-2, S-3 and S-4 with average depths of 5.81, 5.57, and 5.81 feet respectively below the top of the well casing, indicate that a reduced NGS loading limit is appropriate. A limit of 80% of the current loading limit is recommended, which would approximate a depth of 4 feet. The limit for MU-000824 is recommended to be 5.95 inches, down from the current limit of 7.44 inches. MW-14 and MW-17 are side-gradient wells that also have shall ground water, but the nearby mid-gradient wells show deeper ground water, so NGS loading to fields near these wells are likely acceptable.

These changes would reduce the NGS loading rate from the currently permitted 388.38 MG to 363.82 MG. As noted above, the total discharge to land application is anticipated to be 1.54 mgd. For the 181 day NGS, this would be 232.54 MG, so these reductions shouldn't impact the ability of the facility to operate within NGS hydraulic loading limits.

The use of RO Return Water for in plant non-potable process water has been added as a recycled water use in section 4.5. This use will include pump tank make up, floor/equipment cleaning, gutter flushing,

product transport, and potato washing. The RO Return Water will also be allowed for use for toilet flushing and irrigation of the landscaping around the process facility. RO Return Water is defined in Section 1 as a combination of RO permeate and well water, generally in a 1:0.2 ratio, because RO permeate is corrosive if it is not combined with another water source. Approximately 0.7 mgd of RO Return Water use for in-plant recycle is anticipated. A disclaimer was included in this section that DEQ is not placing limits on the quantity and quality of the RO Return Water that is used for food processing inside the plant; this will be under the purview of the United States Food and Drug Administration.

Section 5

The monitoring points in section 5.1 were updated to reflect the following additional effluent streams: Pump Stations PS-2 to PS-5, BVF effluent, RO permeate, RO return water, and RO reject water. New monitoring requirements were specified as needed, including flow and volume monitoring, composite samples of recycled water streams, and total coliform grab samples of RO Return Water. Section 5.2 updated the ground water monitoring points to reflect that two monitoring wells are marked for removal as part of the irrigation reconfiguration (MW-3 and MW-23), and three monitoring wells will be relocated for the same reason (MW-19, MW-21 and MW-39). Chloride and sulfate were added to ground water monitoring requirements, because these constituents have ground water quality standards. The soil sample dates in section 5.3 were specified as 2015 and 2019 rather than "first and last years of permit." Section 5.4 contains additional standard plant tissue monitoring requirements as compared to the current permit. Information about the lagoons was included in section 5.5.

Section 6

Additional recording requirements were added to document the new processes. As discussed under Section 2, authorized responsible official requirements and responsibilities were added to this permit.

Sections 7-10

These sections are standard conditions in the new DEQ permit template. They are somewhat different in some cases from the standard conditions in the current permit.

Section 11

The site maps were updated to reflect the new management configuration and irrigation scenario. Maps of the ground water wells and ground water flow directions were added, as well as a map showing the canals and drains that run through the site.

6.0 Recommendations

Based on review of the applicable state rules, staff recommends that DEQ issue Reuse Permit I-008-05 for a public review and comment period. The draft permit contains the terms and conditions required for operation of this reuse system. Monitoring and reporting requirements to evaluate system performance and to determine permit compliance have been specified in sections 5 and 6, and necessary compliance activities have been included in section 3 of the permit.

Appendix A Flow Diagram from J.R. Simplot Process Water Treatment & Return Plant 40% Submittal, June 15, 2012

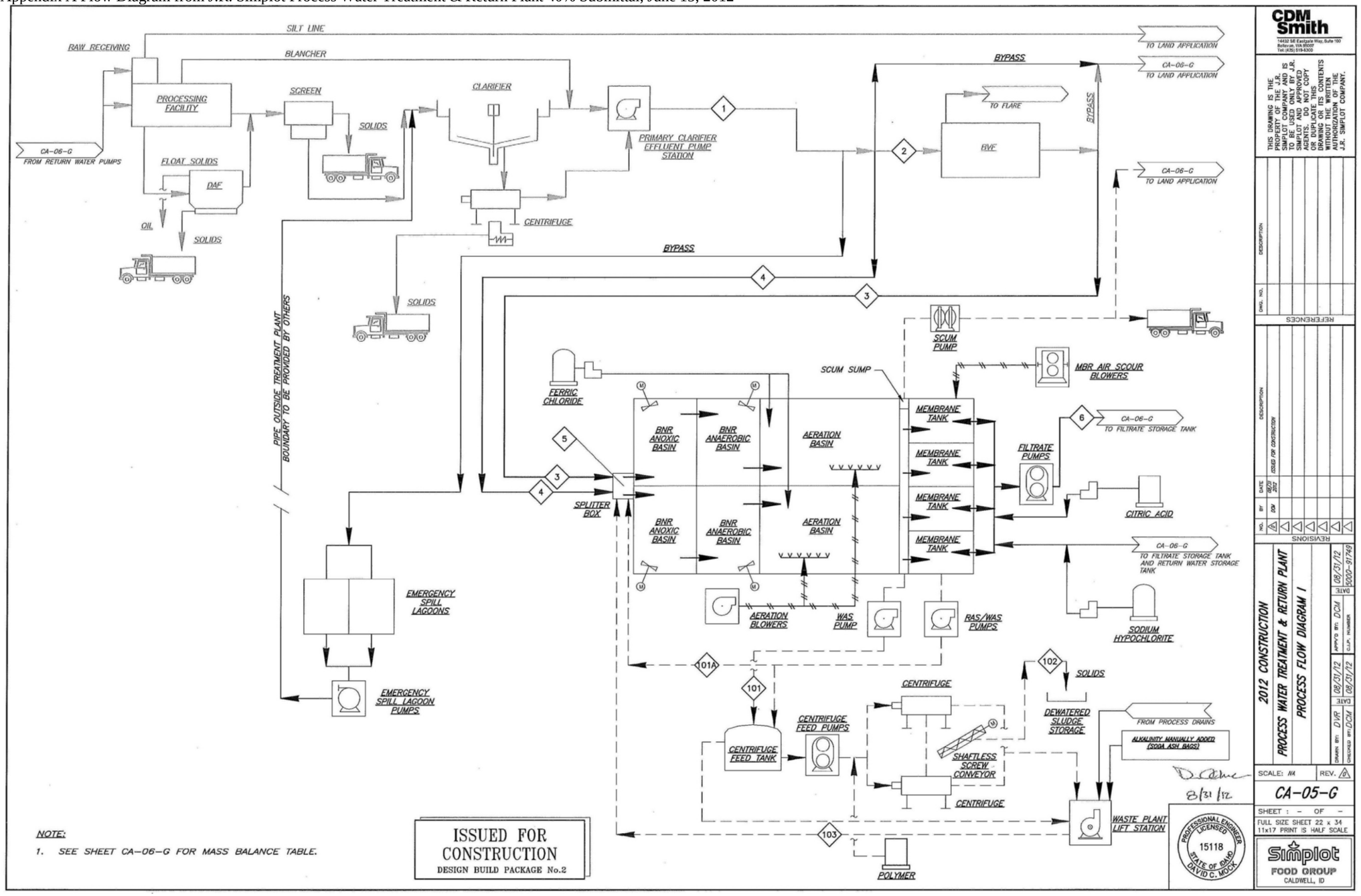

Appendix A Flow Diagram from J.R. Simplot Process Water Treatment & Return Plant 40% Submittal, June 15, 2012

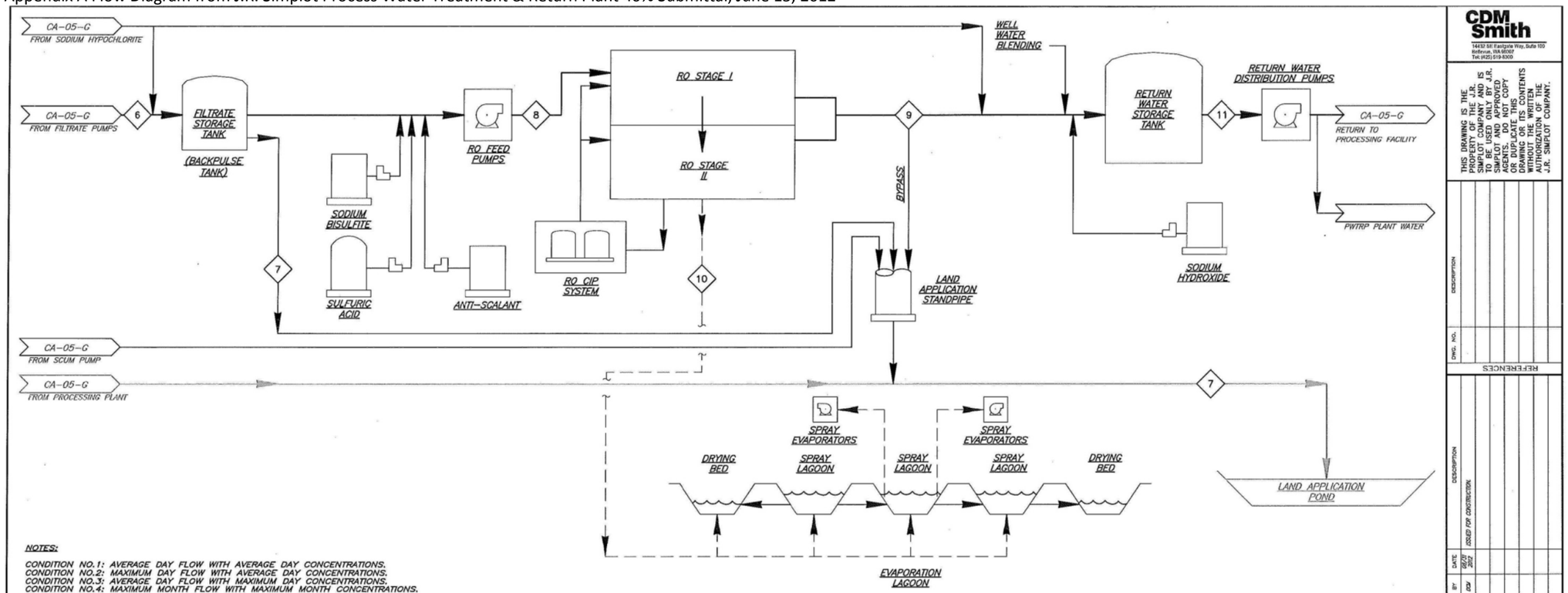

NOTES:

CONDITION NO.1: AVERAGE DAY FLOW WITH AVERAGE DAY CONCENTRATIONS.
CONDITION NO.2: MAXIMUM DAY FLOW WITH AVERAGE DAY CONCENTRATIONS.
CONDITION NO.3: AVERAGE DAY FLOW WITH MAXIMUM DAY CONCENTRATIONS.
CONDITION NO.4: MAXIMUM MONTH FLOW WITH MAXIMUM MONTH CONCENTRATIONS.

STREAM DESCRIPTOR	PRIMARY CLARIFIER EFFLUENT		EXISTING BVF INFLUENT		EXISTING BVF EFFLUENT		BYPASS		AEROBIC INFLUENT		MBR FILTRATE		LAND APPLICATION		RO-INFLUENT		RO MEMBRANE PERMEATE		RO - REJECT WATER		RETURN WATER - RO PERM /WELL RATIO=1:0.2		WASTE ACTIVATED SLUDGE		RETURN ACTIVATED SLUDGE		CENTRIFUGE - DEWATERED SLUDGE		CENTRATE		LAND APPLICATION LIMITS	
STREAM ID	1		2		3		4		5		6		7		8		9		10		11		101		101A		102		103			
	MG/L	LB/D	MG/L	LB/D	MG/L	LB/D	MG/L	LB/D	MG/L	LB/D	MG/L	LB/D	MG/L	LB/D	MG/L	LB/D	MG/L	LB/D	MG/L	LB/D	MG/L	LB/D	MG/L	LB/D	MG/L	LB/D	MG/L	LB/D	MG/L	LB/D	MG/L	LB/D
FLOW (CONDITION 1), MGD	2.28		1.60		1.59		0.68		2.60		2.26		0.66		1.60		1.28		0.32		1.54		0.34		5.7		0.008		0.33		1.52	
FLOW (CONDITION 2), MGD	3.20		1.80		1.79		1.40		3.52		3.18		1.38		1.80		1.44		0.36		1.73		0.34		9.5		0.014		0.32		2.49	
FLOW (CONDITION 3), MGD	2.28		1.40		1.39		0.88		2.60		2.26		0.65		1.60		1.28		0.32		1.54		0.34		9.5		0.009		0.33		1.52	
FLOW (CONDITION 4), MGD	2.66		1.80		1.79		0.86		2.97		2.64		0.84		1.80		1.44		0.36		1.73		0.34		9.5		0.014		0.32		1.96	
TCOD (CONDITION 1)	4990	94,890	4990	66,589	605	8,039	4990	28,301	1711	37,135	67	1,264	67	371	67	893	7	71	-	-	<1	<10	-	-	-	-	-	-	289	796		4,000
TCOD (CONDITION 2)	4990	133,180	4990	74,912	639	9,551	4990	58,268	2358	69,150	78	2,062	78	894	78	1,168	8	93	-	-	<1	<10	-	-	-	-	-	-	494	1333		8,000
TCOD (CONDITION 3)	6088	115,760	6088	71,081	849	9,861	6088	44,679	2567	55,646	82	1,555	82	456	82	1,100	8	88	-	-	<1	<10	-	-	-	-	-	-	405	1105		4,000
TCOD (CONDITION 4)	5906	131,010	5906	88,657	730	10,904	1520	10,904	2190	54,333	77	1,699	77	540	77	1,160	8	93	-	-	<1	<10	-	-	-	-	-	-	398	1073		6,000
NH3-N (CONDITION 1)	72	1,363	72	956	188	2,493	72	406	134	2,901	<1	<1	<1	<1	<1	<1	<1	<1	-	-	<1	<1	-	-	-	-	-	-	<1	<5		-
NH3-N (CONDITION 2)	72	1,912	72	1,076	186	2,776	72	837	123	3,614	<1	<1	<1	<1	<1	<1	<1	<1	-	-	<1	<1	-	-	-	-	-	-	<1	<5		-
NH3-N (CONDITION 3)	109	2,065	109	1,268	286	3,324	109	797	190	4,123	<1	<1	<1	<1	<1	<1	<1	<1	-	-	<1	<1	-	-	-	-	-	-	<1	<5		-
NH3-N (CONDITION 4)	93	2,064	93	1,397	244	3,649	93	667	174	4,318	<1	<1	<1	<1	<1	<1	<1	<1	-	-	<1	<1	-	-	-	-	-	-	<1	<5		-
TKN (CONDITION 1)	231	4,395	231	3,084	218	2,900	231	1,311	197	4,270	6	121	6	36	6	86	1	11	-	-	<1	<10	-	-	-	-	-	-	22	59		-
TKN (CONDITION 2)	231	6,169	231	3,470	218	3,254	231	2,699	206	6,049	7	188	7	81	7	106	1	14	-	-	<1	<10	-	-	-	-	-	-	36	96		-
TKN (CONDITION 3)	350	6,660	350	4,089	334	3,877	350	2,570	301	6,533	9	173	9	51	9	123	1	16	-	-	<1	<10	-	-	-	-	-	-	31	86		-
TKN (CONDITION 4)	300	6,660	300	4,507	283	4,229	300	2,153	260	6,462	8	175	8	56	8	119	1	15	-	-	<1	<10	-	-	-	-	-	-	30	81		-
TN (CONDITION 1)	231	4,395	231	3,084	218	2,900	231	1,311	202	4,390	53	1,008	53	296	53	712	9	91	-	-	<1	<10	-	-	-	-	-	-	65	180		1,570
TN (CONDITION 2)	231	6,169	231	3,470	218	3,254	231	2,699	209	6,137	46	1,220	46	529	46	691	7	88	-	-	<1	<10	-	-	-	-	-	-	68	184		2,350
TN (CONDITION 3)	350	6,660	350	4,089	334	3,877	350	2,570	307	6,655	59	1,120	59	328	59	792	9	101	-	-	<1	<10	-	-	-	-	-	-	76	208		1,570
TN (CONDITION 4)	300	6,660	300	4,507	283	4,229	300	2,153	265	6,578	56	1,236	56	393	56	843	9	108	-	-	<1	<10	-	-	-	-	-	-	73	197		1,885
T-P (CONDITION 1)	73	1,389	73	975	70	923	73	414	65	1,410	<1	19	<1	<10	<1	<10	<1	<1	-	-	<1	<1	-	-	-	-	-	-	26	72		200
T-P (CONDITION 2)	73	1,949	73	1,097	69	1,036	73	853	68	1,989	<1	27	<1	<10	<1	<10	<1	<1	-	-	<1	<1	-	-	-	-	-	-	37	101		275
T-P (CONDITION 3)	79	1,503	79	923	76	882	79	580	71	1,541	<1	19	<1	<10	<1	<10	<1	<1	-	-	<1	<1	-	-	-	-	-	-	29	79		200
T-P (CONDITION 4)	79	1,754	79	1,187	75	1,117	79	567	72	1,775	<1	22	<1	<10	<1	<10	<1	<1	-	-	<1	<1	-	-	-	-	-	-	34	91		238
TSS (CONDITION 1)	392	7,455	392	5,232	281	3,733	392	2,223	304	6,596	<1	<10	<1	<10	<1	<10	<1	<1	-	-	<1	<1	4,538	12,811	4,538	215,712	182,044	12,146	1	59		-
TSS (CONDITION 2)	392	10,463	392	5,885	299	4,464	392	4,578	345	10,125	<1	<10	<1	<10	<1	<10	<1	<1	-	-	<1	<1	7,709	21,711	7,709	610,799	176,302	20,585	1	96		-
TSS (CONDITION 3)	598	11,378	598	6,986	527	6,116	598	4,392	529	11,457	<1	<10	<1	<10	<1	<10	<1	<1	-	-	<1	<1	6,782	19,020	6,782	537,336	240,261	18,034	1	86		-
TSS (CONDITION 4)	464	10,293	464	6,965	354	5,297	464	3,328	383	9,495	<1	<10	<1	<10	<1	<10	<1	<1	-	-	<1	<1	6,206	17,431	6,206	491,714	141,521	16,524	1	81		-
TDS (CONDITION 1)	1600	30,424	1600	21,350	1600	21,244	1600	9,074	1600	34,728	1600	30,211	1600	8,860	1600	21,350	85	907	7660	20,443	71	907	-	-	-	-	-	-	-	-		10,000
TDS (CONDITION 2)	1600	42,699	1600	24,018	1600	23,911	1600	18,682	1600	46,912	1600	42,406	1600	18,387	1600	24,019	85	1,021	6510	19,546	71	1,021	-	-	-	-	-	-	-	-		19,600
TDS (CONDITION 3)	1800	34,227	1800	21,017	1800	20,897	1800	13,211	1800	39,021	1800	33,972	1800	9,953	1800	24,019	96	1,025	8616	22,994	80	1,025	-	-	-	-	-	-	-	-		10,000
TDS (CONDITION 4)	1800	39,930	1800	27,022	1800	26,902	1800	12,910	1800	44,656	1800	39,600	1800	12,579	1800	27,022	96	1,153	8616	25,869	80	1,153	-	-	-	-	-	-	-	-		14,294

ISSUED FOR CONSTRUCTION
DESIGN BUILD PACKAGE No.2

8/31/12

PROFESSIONAL ENGINEER LICENSED 15118 STATE OF IDAHO DAVID C. MOCK

CDM Smith
14432 SE Eastgate Way, Suite 100
Bellevue, WA 98007
Tel: (425) 519-8300

THIS DRAWING IS THE PROPERTY OF THE J.R. SIMPLOT COMPANY AND IS TO BE USED ONLY BY J.R. SIMPLOT AND APPROVED SERVICES. DO NOT COPY OR DUPLICATE THIS DRAWING OR ITS CONTENTS WITHOUT THE WRITTEN AUTHORIZATION OF THE J.R. SIMPLOT COMPANY.

REFERENCES

DWG. NO.	DESCRIPTION

REVISIONS

NO.	BY	DATE	DESCRIPTION
0	DSV	08/31/2012	ISSUED FOR CONSTRUCTION

2012 CONSTRUCTION
PROCESS WATER TREATMENT & RETURN PLANT
PROCESS FLOW DIAGRAM II

DRAWN BY: DVR DATE 08/31/12
CHECKED BY: DCM DATE 08/31/12
APPV'D BY: DCM DATE 08/31/12
C.J.R. NUMBER 5000-91749

SCALE: AS NOTED REV. 0

CA-06-G

SHEET : - OF -

FULL SIZE SHEET 22 x 34
11x17 PRINT IS HALF SCALE

Simplot FOOD GROUP
CALDWELL, ID

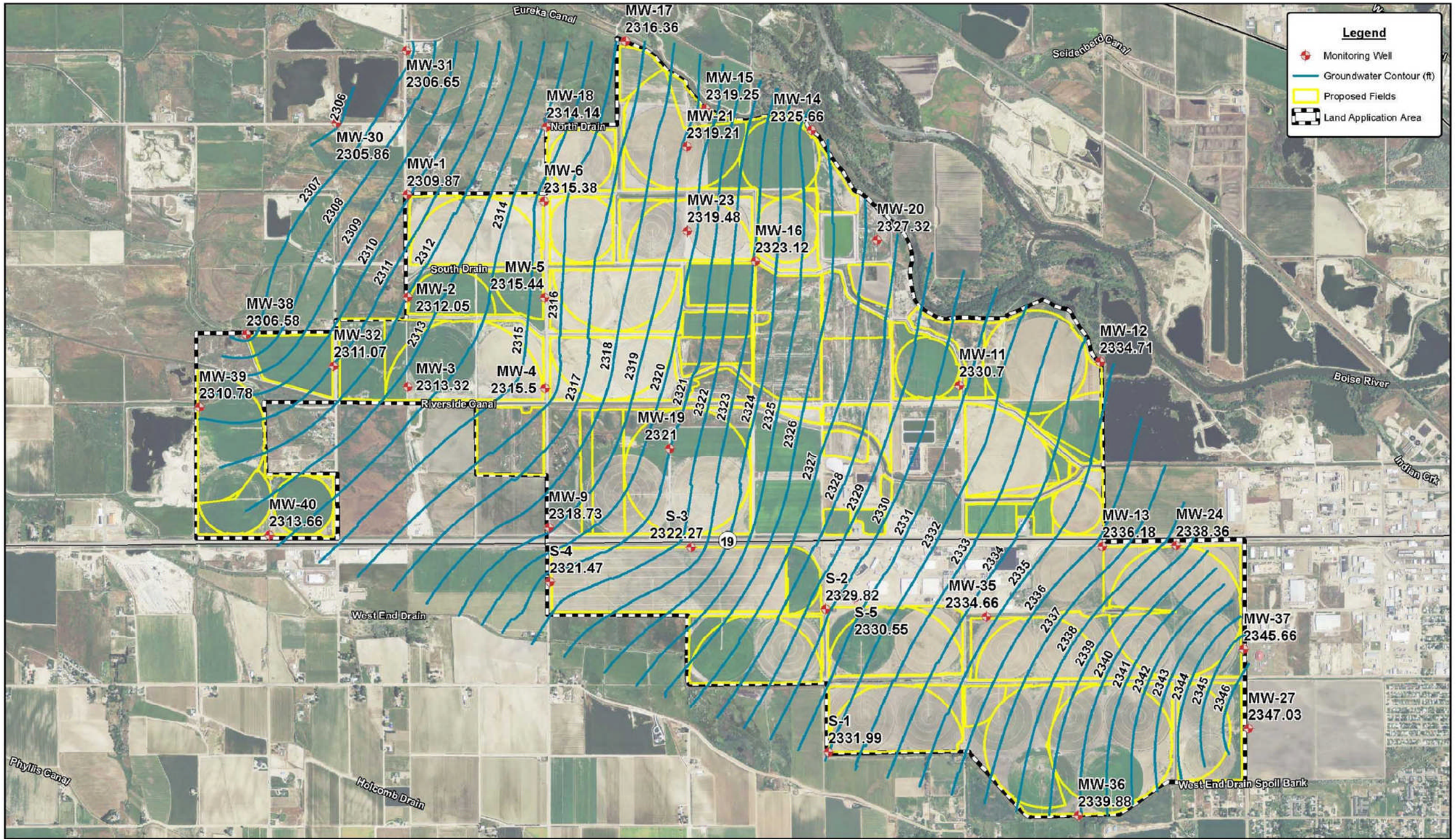

Figure 1-2. April 2011 Groundwater Elevations
Simplot Caldwell, Caldwell, Idaho

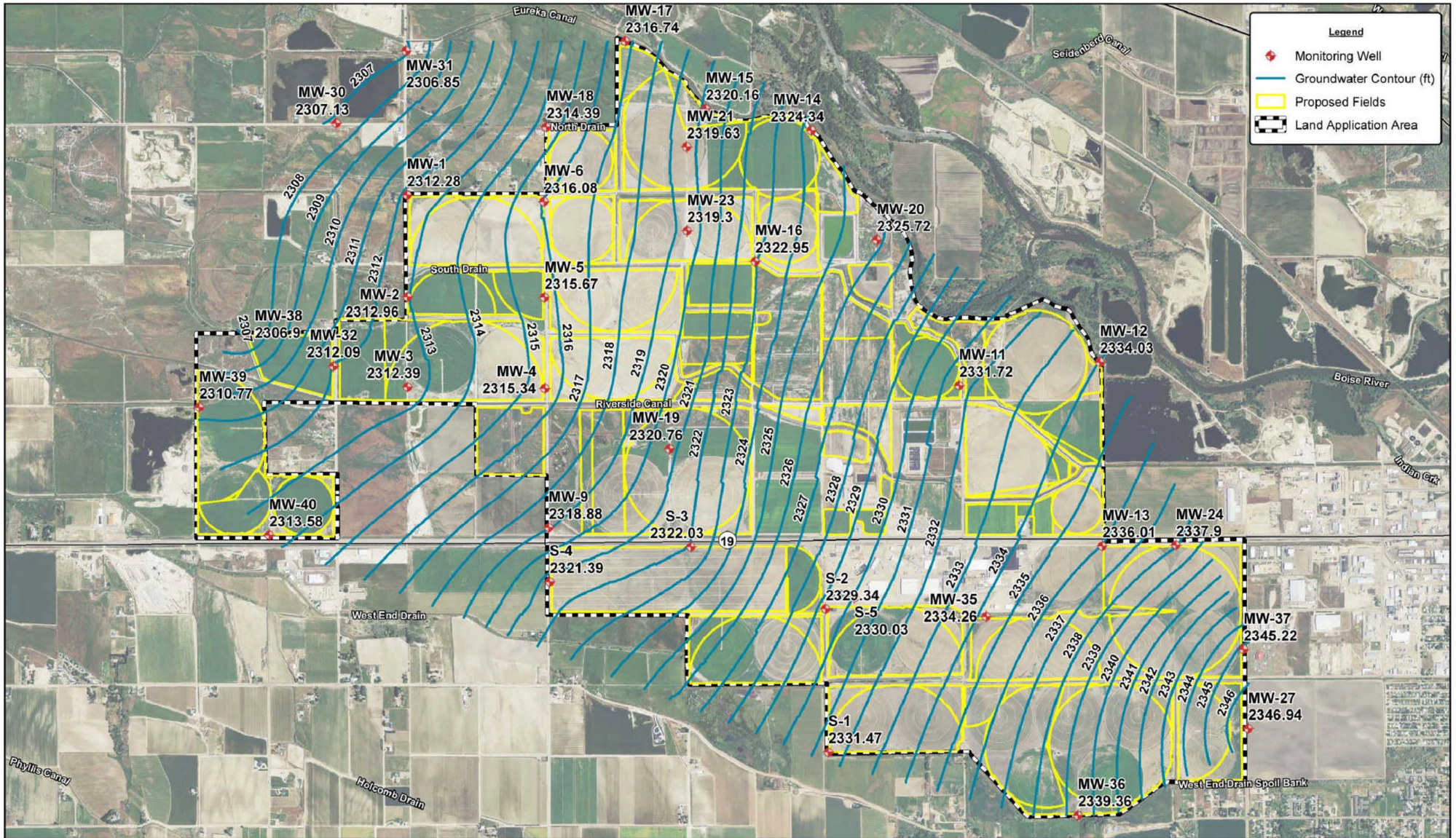

Figure 1-3. October 2011 Groundwater Elevations
Simplot Caldwell, Caldwell, Idaho

Appendix C Canals, Ditches and Drains from Rosier Site Solids Application, Former Pond Closure Report, November 15, 2011

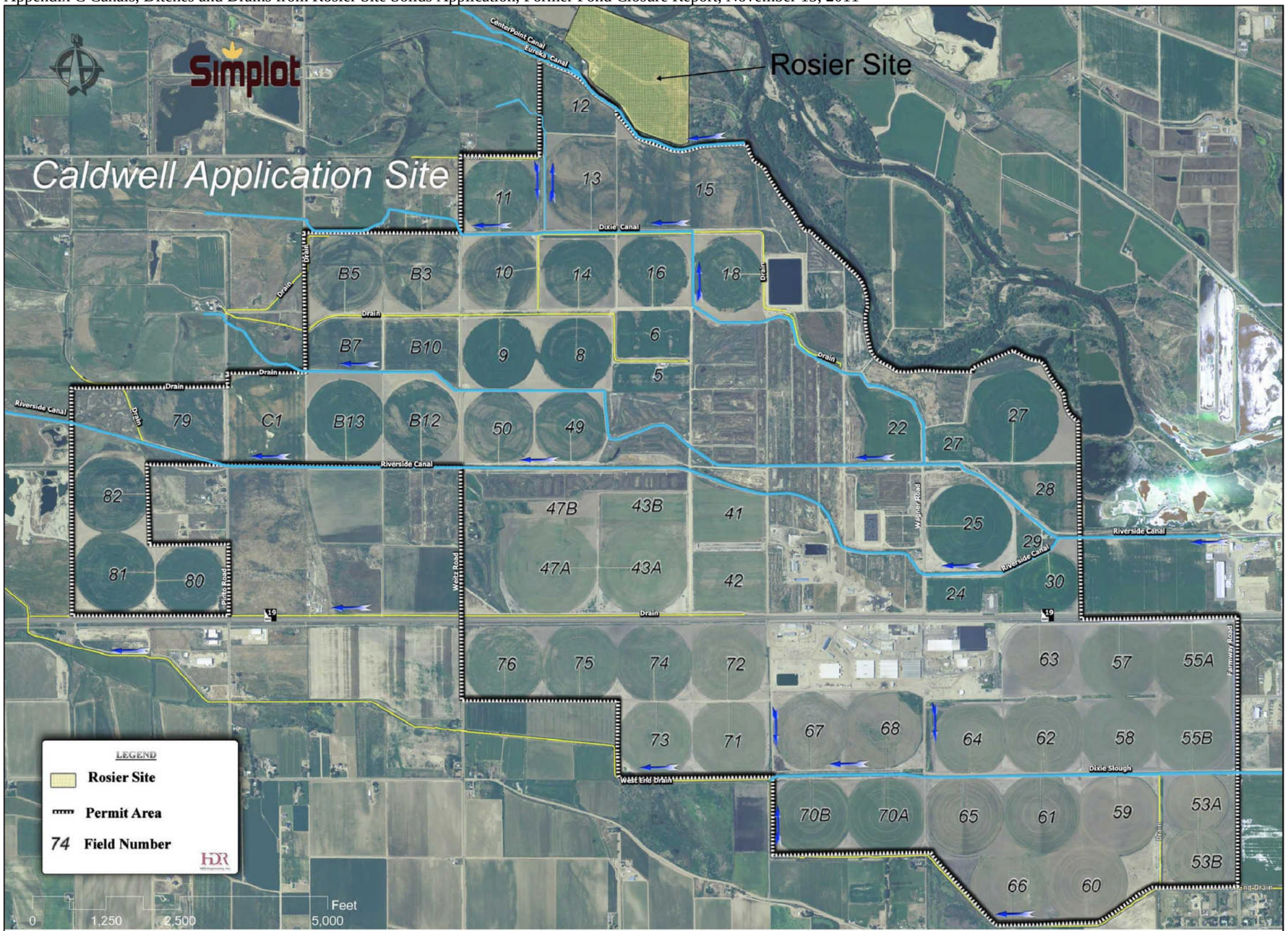

Figure 1 Simplot Facility and Rosier Site

Appendix D Management Units from Construction Plans for J.R. Simplot Process Water Land Application System Modifications, September 28, 2012

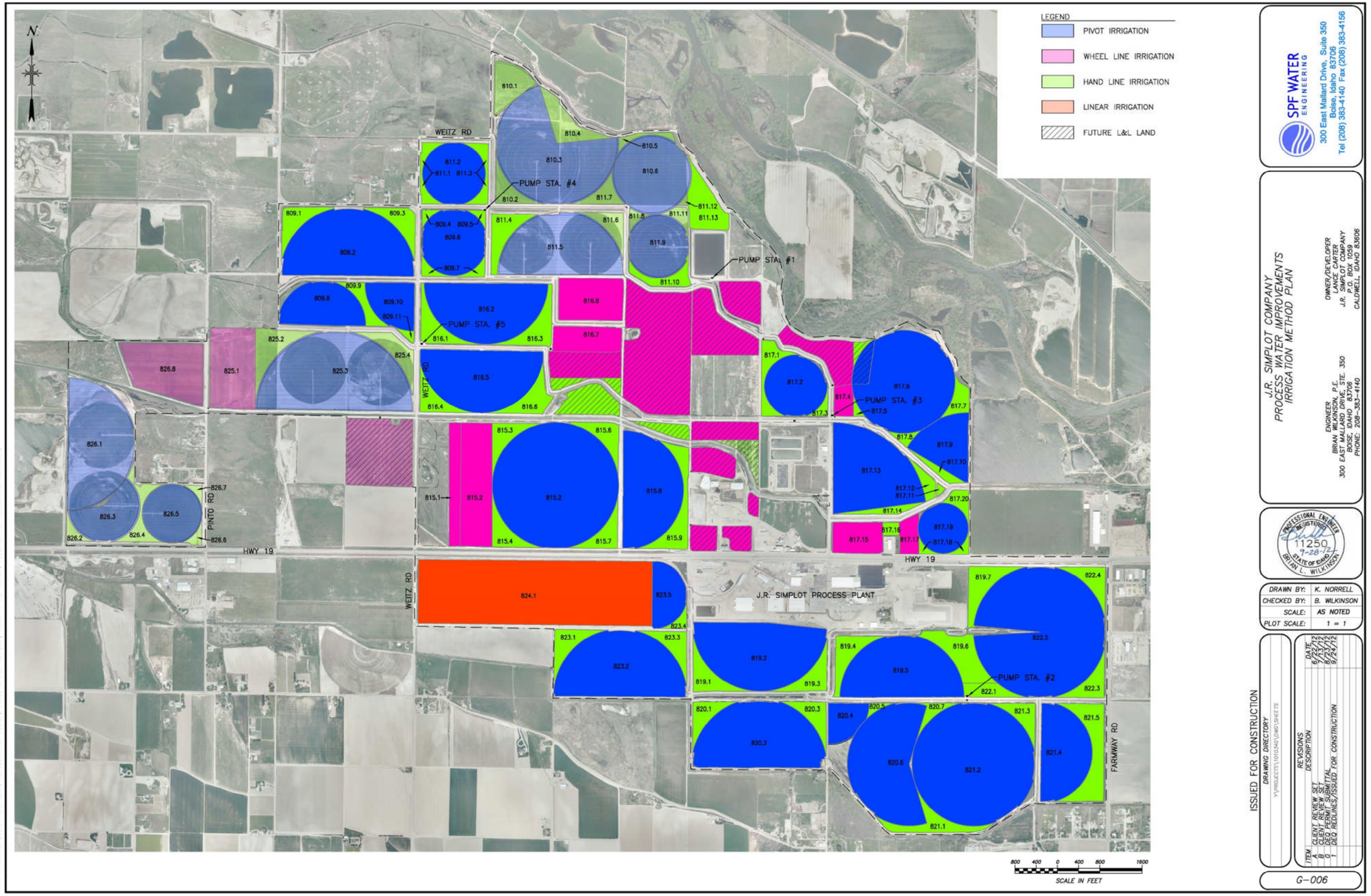

Appendix E Irrigation Types and Acreages, from Major Permit Modification Request, November 2, 2012

FIELD INFO				IRRIGATION METHOD			
FIELD ID	PUMP STATION	HMU	AREA (ACRES)	PIVOT ACRES	WHEELLINE ACRES	HANDLINE ACRES	LINEAR ACRES
809.1	4	HMU809	7.1	0	0	7.1	0
809.2	4	HMU809	58.9	58.9	0	0	0
809.3	4	HMU809	7.4	0	0	7.4	0
809.4	4	HMU809	1.1	0	0	1.1	0
809.5	4	HMU809	1.2	0	0	1.2	0
809.6	4	HMU809	28.3	28.3	0	0	0
809.7	4	HMU809	3.6	0	0	3.6	0
809.8	4	HMU809	25.1	25.1	0	0	0
809.9	4	HMU809	5	0	0	5	0
809.1	4	HMU809	15.7	15.7	0	0	0
809.11	4	HMU809	1	0	0	1	0
HMU 809 TOTALS			**154.3**	**128**	**0**	**26.3**	**0**
810.1	4	HMU810	11.5	11.5	0	0	0
810.2	4	HMU810	5.6	0	0	5.6	0
810.3	4	HMU810	69.9	69.9	0	0	0
810.4	4	HMU810	10.6	0	0	10.6	0
810.5	4	HMU810	2.2	0	0	2.2	0
810.6	4	HMU810	40.5	40.5	0	0	0
HMU 810 TOTALS			**140.2**	**121.8**	**0**	**18.4**	**0**
811.1	4	HMU811	3.9	0	0	3.9	0
811.2	4	HMU811	25.5	25.5	0	0	0
811.3	4	HMU811	4.3	0	0	4.3	0
811.4	4	HMU811	8.6	0	0	8.6	0
811.5	4	HMU811	52	52	0	0	0
811.6	4	HMU811	5.7	0	0	5.7	0
811.7	4	HMU811	4.7	0	0	4.7	0
811.8	4	HMU811	1.5	0	0	1.5	0
811.9	4	HMU811	25.5	25.5	0	0	0
811.1	4	HMU811	5.5	0	0	5.5	0
811.11	4	HMU811	2.6	0	0	2.6	0
811.12	4	HMU811	0.5	0	0	0.5	0
811.13	4	HMU811	13.3	0	0	13.3	0
HMU 811 TOTALS			**153.8**	**103**	**0**	**50.8**	**0**
815.1	5	HMU815	11.6	0	11.6	0	0
815.2	5	HMU815	31.9	0	31.9	0	0
815.3	5	HMU815	6.6	0	0	6.6	0
815.4	5	HMU815	6.3	0	0	6.3	0
815.5	5	HMU815	103	103	0	0	0
815.6	5	HMU815	6.7	0	0	6.7	0
815.7	5	HMU815	6.2	0	0	6.2	0
815.8	5	HMU815	46.5	46.5	0	0	0
815.9	5	HMU815	12	0	0	12	0
HMU 815 TOTALS			**230.7**	**149.4**	**43.5**	**37.8**	**0**
816.1	5	HMU816	8	0	0	8	0
816.2	5	HMU816	48.5	48.5	0	0	0
816.3	5	HMU816	9.1	0	0	9.1	0
816.4	5	HMU816	6.3	0	0	6.3	0
816.5	5	HMU816	49.3	49.3	0	0	0
816.6	5	HMU816	8.1	0	0	8.1	0
816.7	5	HMU816	14.1	0	14.1	0	0
816.8	5	HMU816	22	0	22	0	0
HMU 816 TOTALS			**165.3**	**97.8**	**36**	**31.5**	**0**

Appendix E Irrigation Types and Acreages, from Major Permit Modification Request, November 2, 2012

FIELD INFO				IRRIGATION METHOD			
FIELD ID	PUMP STATION	HMU	AREA (ACRES)	PIVOT ACRES	WHEELLINE ACRES	HANDLINE ACRES	LINEAR ACRES
817.1	3	HMU817	6.9	0	0	6.9	0
817.2	3	HMU817	24.7	24.7	0	0	0
817.3	3	HMU817	1.6	0	0	1.6	0
817.4	3	HMU817	4.8	0	4.8	0	0
817.5	3	HMU817	0.8	0	0	0.8	0
817.6	3	HMU817	62.9	62.9	0	0	0
817.7	3	HMU817	4.6	0	0	4.6	0
817.8	3	HMU817	1.7	0	0	1.7	0
817.9	3	HMU817	21.5	21.5	0	0	0
817.1	3	HMU817	2.8	0	0	2.8	0
817.11	3	HMU817	0.5	0	0	0.5	0
817.12	3	HMU817	3.3	0	0	3.3	0
817.13	3	HMU817	50.4	50.4	0	0	0
817.14	3	HMU817	3.4	0	0	3.4	0
817.15	3	HMU817	12.6	0	12.6	0	0
817.16	3	HMU817	1.7	0	0	1.7	0
817.17	3	HMU817	5.7	0	5.7	0	0
817.18	3	HMU817	2.5	0	0	2.5	0
817.19	3	HMU817	16.3	16.3	0	0	0
817.2	3	HMU817	3.4	0	0	3.4	0
HMU 817 TOTALS			**232.2**	**175.9**	**23.1**	**33.3**	**0**
819.1	2	HMU819	7.7	0	0	7.7	0
819.2	2	HMU819	58.6	58.6	0	0	0
819.3	2	HMU819	7.2	0	0	7.2	0
819.4	2	HMU819	8.3	0	0	8.3	0
819.5	2	HMU819	50.1	50.1	0	0	0
819.6	2	HMU819	13.9	0	0	13.9	0
819.7	2	HMU819	9.9	0	0	9.9	0
HMU 819 TOTALS			**155.8**	**108.7**	**0**	**47**	**0**
820.1	2	HMU820	6	0	0	6	0
820.2	2	HMU820	58.7	58.7	0	0	0
820.3	2	HMU820	6.4	0	0	6.4	0
820.4	2	HMU820	10.6	10.6	0	0	0
820.5	2	HMU820	1.2	0	0	1.2	0
820.6	2	HMU820	57.8	57.8	0	0	0
820.7	2	HMU820	3	0	0	3	0
HMU 820 TOTALS			**143.6**	**127.1**	**0**	**16.6**	**0**
821.1	2	HMU821	9.2	0	0	9.2	0
821.2	2	HMU821	97.7	97.7	0	0	0
821.3	2	HMU821	5.7	0	0	5.7	0
821.4	2	HMU821	33.2	33.2	0	0	0
821.5	2	HMU821	16.8	0	0	16.8	0
HMU 821 TOTALS			**162.6**	**130.9**	**0**	**31.7**	**0**
822.1	2	HMU822	5.2	0	0	5.2	0
822.2	2	HMU822	109.8	109.8	0	0	0
822.3	2	HMU822	6.4	0	0	6.4	0
822.4	2	HMU822	6.5	0	0	6.5	0
HMU 822 TOTALS			**127.9**	**109.8**	**0**	**18.1**	**0**
823.1	SW	HMU823	7.1	0	0	7.1	0
823.2	SW	HMU823	57.8	57.8	0	0	0
823.3	SW	HMU823	6.6	0	0	6.6	0
823.4	SW	HMU823	1.8	0	0	1.8	0
823.5	SW	HMU823	15.2	15.2	0	0	0
HMU 823 TOTALS			**88.5**	**73**	**0**	**15.5**	**0**
824.1	2	HMU824	123	0	0	0	123
HMU 824 TOTALS			**123**	**0**	**0**	**0**	**123**
825.1	5	HMU825	30.1	0	30.1	0	0
825.2	5	HMU825	11.2	0	0	11.2	0
825.3	5	HMU825	81.3	81.3	0	0	0
825.4	5	HMU825	8	0	0	8	0
HMU 825 TOTALS			**130.5**	**81.3**	**30.1**	**19.2**	**0**

FIELD INFO				IRRIGATION METHOD			
FIELD ID	PUMP STATION	HMU	AREA (ACRES)	PIVOT ACRES	WHEELLINE ACRES	HANDLINE ACRES	LINEAR ACRES
826.1	5	HMU826	58.5	58.5	0	0	0
826.2	5	HMU826	2.3	0	0	2.3	0
826.3	5	HMU826	21.2	21.2	0	0	0
826.4	5	HMU826	7	0	0	7	0
826.5	5	HMU826	22.9	22.9	0	0	0
826.6	5	HMU826	1.5	0	0	1.5	0
826.7	5	HMU826	1.3	0	0	1.3	0
826.8	5	HMU826	32.7	0	32.7	0	0
HMU 826 TOTALS			**147.4**	**102.6**	**32.7**	**12.1**	**0**
Grand Total			**2155.8**	**1509.3**	**165.4**	**358.1**	**123.0**