Department of Environmental Quality
1410 N. Hilton, Boise, ID 83706
For assistance, call the
Air Permit Hotline - 1-877-5PERMIT

RECEIVED
OCT 04 2016
DEPARTMENT OF ENVIRONMENTAL QUALITY
STATE A Q PROGRAM

AQ-CH-P008

Department of Environmental Quality - Air Quality Division
Minor Source Permit to Construct Application Completeness Checklist

This checklist is designed to aid the applicant in submitting a complete permit to construct application. In addition to the items in this checklist, information requested by DEQ during review of the application should be provided in accordance with IDAPA 58.01.01.202.03, or the application may be denied.

I. Actions Recommended Before Submitting Application

☒ Refer to the Rule. Read the Permit to Construct requirements contained in IDAPA 58.01.01.200-228, Rules for the Control of Air Pollution in Idaho. The Rules are available on the Department of Administration's website (go to http://adminrules.idaho.gov/rules/current/58/0101.pdf).

☒ Refer to DEQ's Permit to Construct Guidance Document. DEQ has developed a guidance document to aid applicants in submitting a complete permit to construction application. The guidance document is located on DEQ's website (go to http://www.deq.idaho.gov/media/656219-applicant-deq-responsibilities.pdf).

☒ Consult with DEQ Representatives. It is recommended that the applicant schedule a pre-application meeting with DEQ to discuss application requirements before submitting the permit to construct application. The meeting can be in person or on the phone. Contact DEQ's Air Quality Hotline at **877-5PERMIT** to schedule the pre-application meeting. Completed 9/19/2016

☒ Submit Ambient Air Quality Modeling Protocol. It is strongly recommended that an ambient air quality modeling protocol be submitted to DEQ at least two (2) weeks before the permit to construct application is submitted. Contact DEQ's Air Quality Hotline at **877-5PERMIT** for information about the protocol. Submitted 7/15/2016

II. Application Content

Application content should be prepared using the checklist below. The checklist is based on the requirements contained in IDAPA 58.01.01.202.

☒ Apply for a Permit to Construct. Submit a Permit to Construct application using forms available on DEQ's website at http://www.deq.idaho.gov/permitting/air-quality-permitting/forms-checklists.aspx.

☒ Permit to Construct Application Fee. The permit to construct application fee of $1000 must be submitted at the time the original permit to construct application is submitted. Refer to IDAPA 58.01.01.224. If the permit to construct application is withdrawn or denied and a new application is submitted, a new $1,000 application fee is required to be submitted. The application fee is not transferable or refundable. The application fee can be paid by check, credit card or Electronic Funds Transfer (EFT). If you choose to pay by credit card or EFT, contact DEQ's Fiscal Office at (208) 373-0502 to complete the necessary paper work. If you choose to pay by check, enclose the check with your permit to construct application.

☒ Process Description(s). The process or processes for which construction is requested must be described in sufficient detail and clarity such that a member of the general public not familiar with air quality can clearly understand the proposed project. A process flow diagram is required for each process. Attachment #1

☒ Equipment List. All equipment that will be used for which construction is requested must be described in detail. Such description includes, but is not limited to, manufacturer, model number or other descriptor, serial number, maximum process rate, proposed process rate, maximum heat input capacity, stack height, stack diameter, stack gas flowrate, stack gas temperature, etc. All equipment that will be used for which construction is requested must be clearly labeled on the process flow diagram. Attachment #2

☒ Potential to Emit. Submit the uncontrolled potential to emit (pre-control equipment emissions estimates) and the controlled potential to emit (post-control equipment emissions estimates) for all equipment for which

construction is requested. Any limit on the equipment for which is construction is requested may become a limit on that equipment in the permit to construct. Attachment #2

☒ Potential to Emit and Modeled Ambient Concentration for All Regulated Air Pollutants. All proposed emission limits and modeled ambient concentrations for all regulated air pollutants must demonstrate compliance with all applicable air quality rules and regulations. Regulated air pollutants include criteria air pollutants, toxic air pollutants listed pursuant to IDAPA 58.01.01.585 and 586, and hazardous air pollutants listed pursuant to Section 112 of the 1990 Clean Air Act Amendments (go to http://www.epa.gov/ttn/atw/188polls.html). Describe in detail how the proposed emissions limits and modeled ambient concentrations demonstrate compliance with each applicable air quality rule and regulation. It is requested that emissions calculations, assumptions, and documentation be submitted with sufficient detail so DEQ can verify the validity of the emissions estimates. Attachment #3

☒ Scaled Plot Plan. A scaled plot plan is required, with the location of each proposed process and the equipment that will be used in each process clearly labeled. Attachment #4

☒ Schedule for Construction. A schedule for construction is required, including proposed dates for commencement and for completion. For phased projects, proposed dates are required for each phase of the project. Attachment #5

☒ List all Applicable Requirements. All applicable requirements must be cited by the rule or regulation section/subpart that applies for each emissions unit. Attachment #6

☒ Certification of Permit to Construct Application. The permit to construct application must be signed by the Responsible Official and must contain a certification signed by the Responsible Official. The certification must state that, based on information and belief formed after reasonable inquiry, the statements and information in the document are true, accurate, and complete. Refer to IDAPA 58.01.01.123. ☒ Submit the Permit to Construct Application. Submit the permit to construct application and application fee to the following address:

Air Quality Program Office – Application Processing
Department of Environmental Quality
1410 N. Hilton
Boise, ID 83706-1255

DEQ AIR QUALITY PROGRAM
1410 N. Hilton, Boise, ID 83706
For assistance, call the
Air Permit Hotline – 1-877-5PERMIT

General Information - **Form GI**
4/7/16

Please see instructions on second page before filling out the form.

FACILITY AND PERMIT INFORMATION

1. Facility Name:	2. Facility ID Number:
P. Kay Metal Lewiston	
3. Brief Project Description:	Construction of a new metals manufacturing facility.
4. Facility Contact Name:	5. Facility Contact Title:
Daniel Hall	Director of Operations
6. Facility Contact Telephone Number:	7. Facility Contact Email:
323-585-5058	danhall@pkaymetal.com
8. Mailing address where permit will be sent (street/city/state/zip code):	9. Physical address of facility (if different than mailing address) (street/city/state/zip code):
2448 East 25th St, Los Angeles, California 90058	154 Southport Ave, Lewiston, Idaho, 83501
10. County Facility is located	Nez Perce
11. Is the equipment portable?	☒ No ☐ Yes
12. NAICS codes	Primary NAICS: 331528 / Secondary NAICS (if applicable):
13. Brief business description and principal product produced:	P. Kay Metal is a metals manufactuing company that metls and processes lead containing metals into usable products. These final products may be in sow, ingot, bar, and wire form. Melting is conducted in furnaces. Emissions from the furnaces are controlled by baghouses before being discharged to the atmosphere.
14. Describe any contiguous or adjacent facility this company owns or operates:	None
15. Permit Application Type. Provide Permit Number for existing permit. For a PTC, an application fee is required.	☒ Initial Permit to Construct (PTC) ☐ PTC Modification — PTC No. _____ Issued Date _____
	☐ Initial Tier II ☐ Tier II Modification ☐ Tier II Renewal — Tier II No. _____ Issued Date _____
	☐ Initial Tier I ☐ Tier I Administrative Amendment ☐ Tier I Minor Modification ☐ Tier I Significant Modification ☐ Tier I Renewal — Tier I No. _____ Issued Date _____
16. **For Tier I permitted facilities only:** If you are applying for a PTC then you must specify how the PTC will be incorporated into the Tier I permit.	☐ Incorporate PTC at the time of Tier I renewal (IDAPA 58.01.01.209.05.a) ☐ Co-process PTC with Tier I Modification (IDAPA 58.01.01.209.05.b) ☐ Administrative amend the Tier I to incorporate PTC upon applicant's request (IDAPA 58.01.01.209.05.c)
17. ☒ Check here to request facility draft permit before final issuance.	

Certification of Truth, Accuracy, and Completeness (by Responsible Official)
I hereby certify that based on information and belief formed after reasonable inquiry, the statements and information contained in this and any attached and/or referenced document(s) are true, accurate, and complete in accordance with IDAPA 58.01.01.123 124.

Responsible Official Signature	Daniel Hall, Director of Operations *Responsible Official Title*	27 SEPT 2016 *Date*

DEQ AIR QUALITY PROGRAM
1410 N. Hilton, Boise, ID 83706
For assistance, call the
Air Permit Hotline – 1-877-5PERMIT

Emissions Unit - General **Form EU0**
Revision 4
08/28/08

Please see instructions on page 2 before filling out the form.

IDENTIFICATION

1. Company Name:	2. Facility Name:	3. Facility ID No:
P. Kay Metal, Inc.	P. Kay Metal Lewiston	

4. Brief Project Description:	Construction of a new metals manufacturing facility.

EMISSIONS UNIT (PROCESS) IDENTIFICATION & DESCRIPTION

5.	Emissions Unit (EU) Name:	TILTING ROTARY FURNACE
6.	EU ID Number:	KETTLE 1
7.	EU Type:	☒ New Source ☐ Unpermitted Existing Source ☐ Modification to a Permitted Source -- Previous Permit #: Date Issued:
8.	Manufacturer:	MANSELL AND ASSOCIATES, LLC ATTACHMENT 7-1.
9.	Model:	Burner Unit NO. 75
10..	Maximum Capacity:	53,000 LBS
11.	Date of Construction:	BETWEEN NOVEMBER 2016 AND MARCH 2017
12.	Date of Modification (if any):	
13.	Is this a Controlled Emission Unit?	☐ No ☒ Yes If Yes, complete the following section. If No, go to line 22.

EMISSIONS CONTROL EQUIPMENT

14. Control Equipment Name and ID:	Rotary Furnace Baghouse		
15. Date of Installation:	March 2017	16. Date of Modification (if any):	
17. Manufacturer and Model Number:	CAMCORP Model 70TR10x1050		
18. ID(s) of Emission Unit Controlled:	Rotary		
19. Is operating schedule different than emission units(s) involved?	☐ Yes ☒ No		
20. Does the manufacturer guarantee the control efficiency of the control equipment?	☒ Yes ☐ No (If Yes, attach and label manufacturer guarantee)		

	Pollutant Controlled					
	PM	PM10	SO_2	NOx	VOC	CO
Control Efficiency	99%	99%				

21. If manufacturer's data is not available, attach a separate sheet of paper to provide the control equipment design specifications and performance data to support the above mentioned control efficiency. Attachment 7-31

EMISSION UNIT OPERATING SCHEDULE (hours/day, hours/year, or other)

22.	Actual Operation:	24 HOURS PER DAY, 6 DAYS PER WEEK, 50 WEEKS PER YR
23.	Maximum Operation:	24 HOURS PER DAY, 7 DAYS PER WEEK, 52 WEEKS PER YR

REQUESTED LIMITS

24.	Are you requesting any permit limits?	☒ Yes ☐ No (If Yes, indicate all that apply below)
	☐ Operation Hour Limit(s):	
	☐ Production Limit(s):	131838 TPY
	☐ Material Usage Limit(s):	
	☐ Limits Based on Stack Testing:	Please attach all relevant stack testing summary reports
	☐ Other:	
25.	Rationale for Requesting the Limit(s):	TO DEFINE AND LIMIT ANNUAL EMISSIONS

DEQ AIR QUALITY PROGRAM
1410 N. Hilton, Boise, ID 83706
For assistance, call the
Air Permit Hotline – 1-877-5PERMIT

Emissions Unit - General **Form EU0**
Revision 4
08/28/08

Please see instructions on page 2 before filling out the form.

IDENTIFICATION

1. Company Name:	2. Facility Name:	3. Facility ID No:
P. Kay Metal, Inc.	P. Kay Metal Lewiston	

4. Brief Project Description:	Construction of new metals manufacturing facility.

EMISSIONS UNIT (PROCESS) IDENTIFICATION & DESCRIPTION

5.	Emissions Unit (EU) Name:	REFINING KETTLE
6.	EU ID Number:	KETTLE 2
7.	EU Type:	☒ New Source ☐ Unpermitted Existing Source ☐ Modification to a Permitted Source -- Previous Permit #: Date Issued:
8.	Manufacturer:	ECLIPSE RATIO AIR BURNERS ATTACHMENT 7-5
9.	Model:	RA0300
10..	Maximum Capacity:	100,000 LBS
11.	Date of Construction:	BETWEEN NOVEMBER 2016 AND MARCH 2017
12.	Date of Modification (if any):	
13.	Is this a Controlled Emission Unit?	☐ No ☒ Yes If Yes, complete the following section. If No, go to line 22.

EMISSIONS CONTROL EQUIPMENT

14. Control Equipment Name and ID:	Rotary Furnace Baghouse
15. Date of Installation:	March 2017 16. Date of Modification (if any):
17. Manufacturer and Model Number:	CAMCORP Model 70TR10x1050
18. ID(s) of Emission Unit Controlled:	Rotary
19. Is operating schedule different than emission units(s) involved?	☐ Yes ☒ No
20. Does the manufacturer guarantee the control efficiency of the control equipment?	☒ Yes ☐ No (If Yes, attach and label manufacturer guarantee)

	Pollutant Controlled					
	PM	PM10	SO_2	NOx	VOC	CO
Control Efficiency	99%	99%				

21. If manufacturer's data is not available, attach a separate sheet of paper to provide the control equipment design specifications and performance data to support the above mentioned control efficiency. Attachment 7-32

EMISSION UNIT OPERATING SCHEDULE (hours/day, hours/year, or other)

22.	Actual Operation:	24 HOURS PER DAY, 6 DAYS PER WEEK, 50 WEEKS PER YR
23.	Maximum Operation:	24 HOURS PER DAY, 7 DAYS PER WEEK, 52 WEEKS PER YR

REQUESTED LIMITS

24.	Are you requesting any permit limits?	☒ Yes ☐ No (If Yes, indicate all that apply below)
	☐ Operation Hour Limit(s):	
	☐ Production Limit(s):	131838 TPY
	☐ Material Usage Limit(s):	
	☐ Limits Based on Stack Testing:	Please attach all relevant stack testing summary reports
	☐ Other:	
25.	Rationale for Requesting the Limit(s):	TO DEFINE AND LIMIT ANNUAL EMISSIONS

DEQ AIR QUALITY PROGRAM
1410 N. Hilton, Boise, ID 83706
For assistance, call the
Air Permit Hotline – 1-877-5PERMIT

Emissions Unit - General **Form EU0**
Revision 4
08/28/08

Please see instructions on page 2 before filling out the form.

IDENTIFICATION

1. Company Name:	2. Facility Name:	3. Facility ID No:
P. Kay Metal, Inc.	P. Kay Metal Lewiston	

4. Brief Project Description:	Construction of a new metals manufacturing facility.

EMISSIONS UNIT (PROCESS) IDENTIFICATION & DESCRIPTION

5.	Emissions Unit (EU) Name:	REFINING KETTLE
6.	EU ID Number:	KETTLE 3
7.	EU Type:	☒ New Source ☐ Unpermitted Existing Source ☐ Modification to a Permitted Source -- Previous Permit #: Date Issued:
8.	Manufacturer:	ECLIPSE RATIO AIR BURNERS ATTACHMENT 7-5
9.	Model:	RA0300
10..	Maximum Capacity:	100,000 LBS
11.	Date of Construction:	between November 2016 and March 2017
12.	Date of Modification (if any):	
13.	Is this a Controlled Emission Unit?	☐ No ☒ Yes If Yes, complete the following section. If No, go to line 22.

EMISSIONS CONTROL EQUIPMENT

14. Control Equipment Name and ID:	Rotary Furnace Baghouse
15. Date of Installation:	March 2017 16. Date of Modification (if any):
17. Manufacturer and Model Number:	CAMCORP Model 70TR10x1050
18. ID(s) of Emission Unit Controlled:	Rotary
19. Is operating schedule different than emission units(s) involved?	☐ Yes ☒ No
20. Does the manufacturer guarantee the control efficiency of the control equipment?	☒ Yes ☐ No (If Yes, attach and label manufacturer guarantee)

	Pollutant Controlled					
	PM	PM10	SO_2	NOx	VOC	CO
Control Efficiency	99%	99%				

21. If manufacturer's data is not available, attach a separate sheet of paper to provide the control equipment design specifications and performance data to support the above mentioned control efficiency. Attachment 7-32

EMISSION UNIT OPERATING SCHEDULE (hours/day, hours/year, or other)

22.	Actual Operation:	24 HOURS PER DAY, 6 DAYS PER WEEK, 50 WEEKS PER YR
23.	Maximum Operation:	24 HOURS PER DAY, 7 DAYS PER WEEK, 52 WEEKS PER YR

REQUESTED LIMITS

24.	Are you requesting any permit limits?	☒ Yes ☐ No (If Yes, indicate all that apply below)
	☐ Operation Hour Limit(s):	
	☐ Production Limit(s):	131838 TPY
	☐ Material Usage Limit(s):	
	☐ Limits Based on Stack Testing:	Please attach all relevant stack testing summary reports
	☐ Other:	
25.	Rationale for Requesting the Limit(s):	TO DEFINE AND LIMIT ANNUAL EMISSIONS

DEQ AIR QUALITY PROGRAM
1410 N. Hilton, Boise, ID 83706
For assistance, call the
Air Permit Hotline – 1-877-5PERMIT

Emissions Unit - General **Form EU0**
Revision 4
08/28/08

Please see instructions on page 2 before filling out the form.

IDENTIFICATION

1. Company Name:	2. Facility Name:	3. Facility ID No:
P. Kay Metal, Inc.	P. Kay Metal Lewiston	

4. Brief Project Description:	Construction of a new metals manufacturing facility.

EMISSIONS UNIT (PROCESS) IDENTIFICATION & DESCRIPTION

5.	Emissions Unit (EU) Name:	Alloying Kettle
6.	EU ID Number:	KETTLE 4
7.	EU Type:	☒ New Source ☐ Unpermitted Existing Source ☐ Modification to a Permitted Source -- Previous Permit #: Date Issued:
8.	Manufacturer:	ECLIPSE RATIO AIR BURNERS ATTACHMENT 7-11
9.	Model:	RA0500
10..	Maximum Capacity:	200,000 LBS
11.	Date of Construction:	BETWEEN NOVEMBER 2016 AND MARCH 2017
12.	Date of Modification (if any):	
13.	Is this a Controlled Emission Unit?	☐ No ☒ Yes If Yes, complete the following section. If No, go to line 22.

EMISSIONS CONTROL EQUIPMENT

14. Control Equipment Name and ID:	Holding Kettle Room Baghouse		
15. Date of Installation:	March 2017	16. Date of Modification (if any):	
17. Manufacturer and Model Number:	CAMCORP Model 42TR10x630		
18. ID(s) of Emission Unit Controlled:	Holding		
19. Is operating schedule different than emission units(s) involved?	☐ Yes ☒ No		
20. Does the manufacturer guarantee the control efficiency of the control equipment?	☒ Yes ☐ No (If Yes, attach and label manufacturer guarantee)		

	Pollutant Controlled					
	PM	PM10	SO_2	NOx	VOC	CO
Control Efficiency	99%	99%				

21. If manufacturer's data is not available, attach a separate sheet of paper to provide the control equipment design specifications and performance data to support the above mentioned control efficiency. Attachment 7-32

EMISSION UNIT OPERATING SCHEDULE (hours/day, hours/year, or other)

22.	Actual Operation:	24 HOURS PER DAY, 6 DAYS PER WEEK, 50 WEEKS PER YR
23.	Maximum Operation:	24 HOURS PER DAY, 7 DAYS PER WEEK, 52 WEEKS PER YR

REQUESTED LIMITS

24.	Are you requesting any permit limits?	☒ Yes ☐ No (If Yes, indicate all that apply below)
	☐ Operation Hour Limit(s):	
	☐ Production Limit(s):	131838 TPY
	☐ Material Usage Limit(s):	
	☐ Limits Based on Stack Testing:	Please attach all relevant stack testing summary reports
	☐ Other:	
25.	Rationale for Requesting the Limit(s):	TO DEFINE AND LIMIT ANNUAL EMISSIONS

DEQ AIR QUALITY PROGRAM
1410 N. Hilton, Boise, ID 83706
For assistance, call the
Air Permit Hotline – 1-877-5PERMIT

Emissions Unit - General **Form EU0**
Revision 4
08/28/08

Please see instructions on page 2 before filling out the form.

IDENTIFICATION

1. Company Name:	2. Facility Name:	3. Facility ID No:
P. Kay Metal, Inc.	P. Kay Metal Lewiston	

4. Brief Project Description:	Construction of a new metals manufacturing facility.

EMISSIONS UNIT (PROCESS) IDENTIFICATION & DESCRIPTION

5.	Emissions Unit (EU) Name:	Alloying Kettle
6.	EU ID Number:	KETTLE 5
7.	EU Type:	☒ New Source ☐ Unpermitted Existing Source ☐ Modification to a Permitted Source -- Previous Permit #: Date Issued:
8.	Manufacturer:	ECLIPSE RATIO AIR BURNERS ATTACHMENT 7-11
9.	Model:	RA0500
10..	Maximum Capacity:	200,000 LBS
11.	Date of Construction:	BETWEEN NOVEMBER 2016 AND MARCH 2017
12.	Date of Modification (if any):	
13.	Is this a Controlled Emission Unit?	☐ No ☒ Yes If Yes, complete the following section. If No, go to line 22.

EMISSIONS CONTROL EQUIPMENT

14. Control Equipment Name and ID:	Holding Kettle Room Baghouse
15. Date of Installation:	March 2017 16. Date of Modification (if any):
17. Manufacturer and Model Number:	CAMCORP Model 42TR10x630
18. ID(s) of Emission Unit Controlled:	Holding
19. Is operating schedule different than emission units(s) involved?	☐ Yes ☒ No
20. Does the manufacturer guarantee the control efficiency of the control equipment?	☒ Yes ☐ No (If Yes, attach and label manufacturer guarantee)

	Pollutant Controlled					
	PM	PM10	SO_2	NOx	VOC	CO
Control Efficiency	99%	99%				

21. If manufacturer's data is not available, attach a separate sheet of paper to provide the control equipment design specifications and performance data to support the above mentioned control efficiency. Attachment 7-32

EMISSION UNIT OPERATING SCHEDULE (hours/day, hours/year, or other)

22.	Actual Operation:	24 HOURS PER DAY, 6 DAYS PER WEEK, 50 WEEKS PER YR
23.	Maximum Operation:	24 HOURS PER DAY, 7 DAYS PER WEEK, 52 WEEKS PER YR

REQUESTED LIMITS

24.	Are you requesting any permit limits?	☒ Yes ☐ No (If Yes, indicate all that apply below)
	☐ Operation Hour Limit(s):	
	☐ Production Limit(s):	131838 TPY
	☐ Material Usage Limit(s):	
	☐ Limits Based on Stack Testing:	Please attach all relevant stack testing summary reports
	☐ Other:	
25.	Rationale for Requesting the Limit(s):	TO DEFINE AND LIMIT ANNUAL EMISSIONS

DEQ AIR QUALITY PROGRAM
1410 N. Hilton, Boise, ID 83706
For assistance, call the
Air Permit Hotline – 1-877-5PERMIT

Emissions Unit - General **Form EU0**
Revision 4
08/28/08

Please see instructions on page 2 before filling out the form.

IDENTIFICATION

1. Company Name:	2. Facility Name:	3. Facility ID No:
P. Kay Metal, Inc.	P. Kay Metal Lewiston	

4. Brief Project Description:	Construction of a new metals manufacturing facility.

EMISSIONS UNIT (PROCESS) IDENTIFICATION & DESCRIPTION

5.	Emissions Unit (EU) Name:	HOLDING KETTLE
6.	EU ID Number:	KETTLE 6
7.	EU Type:	☒ New Source ☐ Unpermitted Existing Source ☐ Modification to a Permitted Source -- Previous Permit #: Date Issued:
8.	Manufacturer:	ECLIPSE RATIO AIR BURNERS ATTACHMENT 7-5
9.	Model:	RA0300
10..	Maximum Capacity:	100,000 LBS
11.	Date of Construction:	BETWEEN NOVEMBER 2016 AND MARCH 2017
12.	Date of Modification (if any):	
13.	Is this a Controlled Emission Unit?	☐ No ☒ Yes If Yes, complete the following section. If No, go to line 22.

EMISSIONS CONTROL EQUIPMENT

14. Control Equipment Name and ID:	Holding Kettle Room Baghouse		
15. Date of Installation:	March 2017	16. Date of Modification (if any):	
17. Manufacturer and Model Number:	CAMCORP Model 42TR10x630		
18. ID(s) of Emission Unit Controlled:	Holding		
19. Is operating schedule different than emission units(s) involved?	☐ Yes ☒ No		
20. Does the manufacturer guarantee the control efficiency of the control equipment?	☒ Yes ☐ No (If Yes, attach and label manufacturer guarantee)		

	Pollutant Controlled					
	PM	PM10	SO_2	NOx	VOC	CO
Control Efficiency	99%	99%				

21. If manufacturer's data is not available, attach a separate sheet of paper to provide the control equipment design specifications and performance data to support the above mentioned control efficiency. Attachment 7-32

EMISSION UNIT OPERATING SCHEDULE (hours/day, hours/year, or other)

22.	Actual Operation:	24 HOURS PER DAY, 6 DAYS PER WEEK, 50 WEEKS PER YR
23.	Maximum Operation:	24 HOURS PER DAY, 7 DAYS PER WEEK, 52 WEEKS PER YR

REQUESTED LIMITS

24.	Are you requesting any permit limits?	☒ Yes ☐ No (If Yes, indicate all that apply below)
	☐ Operation Hour Limit(s):	
	☐ Production Limit(s):	131838 TPY
	☐ Material Usage Limit(s):	
	☐ Limits Based on Stack Testing:	Please attach all relevant stack testing summary reports
	☐ Other:	
25.	Rationale for Requesting the Limit(s):	To define and limit annual emissions

DEQ AIR QUALITY PROGRAM
1410 N. Hilton, Boise, ID 83706
For assistance, call the
Air Permit Hotline – 1-877-5PERMIT

Emissions Unit - General **Form EU0**
Revision 4
08/28/08

Please see instructions on page 2 before filling out the form.

IDENTIFICATION

1. Company Name:	2. Facility Name:	3. Facility ID No:
P. Kay Metal, Inc.	P. Kay Metal Lewiston	

4. Brief Project Description:	Construction of a new metals manufacturing facility.

EMISSIONS UNIT (PROCESS) IDENTIFICATION & DESCRIPTION

5.	Emissions Unit (EU) Name:	HOLDING KETTLE
6.	EU ID Number:	KETTLE 7
7.	EU Type:	☒ New Source ☐ Unpermitted Existing Source ☐ Modification to a Permitted Source -- Previous Permit #: Date Issued:
8.	Manufacturer:	ECLIPSE RATIO AIR BURNERS ATTACHMENT 7-5
9.	Model:	RA0300
10..	Maximum Capacity:	100,000 LBS
11.	Date of Construction:	BETWEEN NOVEMBER 2016 AND MARCH 2017
12.	Date of Modification (if any):	
13.	Is this a Controlled Emission Unit?	☐ No ☒ Yes If Yes, complete the following section. If No, go to line 22.

EMISSIONS CONTROL EQUIPMENT

14. Control Equipment Name and ID:	Holding Kettle Room Baghouse
15. Date of Installation:	March 2017 16. Date of Modification (if any):
17. Manufacturer and Model Number:	CAMCORP Model 42TR10x630
18. ID(s) of Emission Unit Controlled:	Holding
19. Is operating schedule different than emission units(s) involved?	☐ Yes ☒ No
20. Does the manufacturer guarantee the control efficiency of the control equipment?	☒ Yes ☐ No (If Yes, attach and label manufacturer guarantee)

	Pollutant Controlled					
	PM	PM10	SO_2	NOx	VOC	CO
Control Efficiency	99%	99%				

21. If manufacturer's data is not available, attach a separate sheet of paper to provide the control equipment design specifications and performance data to support the above mentioned control efficiency. Attachment 7-32

EMISSION UNIT OPERATING SCHEDULE (hours/day, hours/year, or other)

22.	Actual Operation:	24 HOURS PER DAY, 6 DAYS PER WEEK, 50 WEEKS PER YR
23.	Maximum Operation:	24 HOURS PER DAY, 7 DAYS PER WEEK, 52 WEEKS PER YR

REQUESTED LIMITS

24.	Are you requesting any permit limits?	☒ Yes ☐ No (If Yes, indicate all that apply below)
	☐ Operation Hour Limit(s):	
	☐ Production Limit(s):	131838 TPY
	☐ Material Usage Limit(s):	
	☐ Limits Based on Stack Testing:	Please attach all relevant stack testing summary reports
	☐ Other:	
25.	Rationale for Requesting the Limit(s):	TO DEFINE AND LIMIT ANNUAL EMISSIONS

DEQ AIR QUALITY PROGRAM
1410 N. Hilton, Boise, ID 83706
For assistance, call the
Air Permit Hotline – 1-877-5PERMIT

Emissions Unit - General **Form EU0**
Revision 4
08/28/08

Please see instructions on page 2 before filling out the form.

IDENTIFICATION

1. Company Name:	2. Facility Name:	3. Facility ID No:
P. Kay Metal, Inc.	P. Kay Metal Lewiston	

4. Brief Project Description:	Construction of a new metals manufacturing facility.

EMISSIONS UNIT (PROCESS) IDENTIFICATION & DESCRIPTION

5.	Emissions Unit (EU) Name:	HOLDING KETTLE
6.	EU ID Number:	KETTLE 8
7.	EU Type:	☒ New Source ☐ Unpermitted Existing Source ☐ Modification to a Permitted Source -- Previous Permit #: Date Issued:
8.	Manufacturer:	ECLIPSE RATIO AIR BURNERS ATTACHMENT 7-5
9.	Model:	RA0300
10..	Maximum Capacity:	100,000 LBS
11.	Date of Construction:	BETWEEN NOVEMBER 2016 AND MARCH 2017
12.	Date of Modification (if any):	
13.	Is this a Controlled Emission Unit?	☐ No ☒ Yes If Yes, complete the following section. If No, go to line 22.

EMISSIONS CONTROL EQUIPMENT

14. Control Equipment Name and ID:	Holding Kettle Room Baghouse
15. Date of Installation:	March 2017 16. Date of Modification (if any):
17. Manufacturer and Model Number:	CAMCORP Model 42TR10x630
18. ID(s) of Emission Unit Controlled:	Holding
19. Is operating schedule different than emission units(s) involved?	☐ Yes ☒ No
20. Does the manufacturer guarantee the control efficiency of the control equipment?	☒ Yes ☐ No (If Yes, attach and label manufacturer guarantee)

	Pollutant Controlled					
	PM	PM10	SO_2	NOx	VOC	CO
Control Efficiency	99%	99%				

21. If manufacturer's data is not available, attach a separate sheet of paper to provide the control equipment design specifications and performance data to support the above mentioned control efficiency. Attachment 7-32

EMISSION UNIT OPERATING SCHEDULE (hours/day, hours/year, or other)

22.	Actual Operation:	24 HOURS PER DAY, 6 DAYS PER WEEK, 50 WEEKS PER YR
23.	Maximum Operation:	24 HOURS PER DAY, 7 DAYS PER WEEK, 52 WEEKS PER YR

REQUESTED LIMITS

24.	Are you requesting any permit limits?	☒ Yes ☐ No (If Yes, indicate all that apply below)
	☐ Operation Hour Limit(s):	
	☐ Production Limit(s):	131838 TPY
	☐ Material Usage Limit(s):	
	☐ Limits Based on Stack Testing:	Please attach all relevant stack testing summary reports
	☐ Other:	
25.	Rationale for Requesting the Limit(s):	TO DEFINE AND LIMIT ANNUAL EMISSIONS

DEQ AIR QUALITY PROGRAM
1410 N. Hilton, Boise, ID 83706
For assistance, call the
Air Permit Hotline – 1-877-5PERMIT

Emissions Unit - General **Form EU0**
Revision 4
08/28/08

Please see instructions on page 2 before filling out the form.

IDENTIFICATION

1. Company Name:	2. Facility Name:	3. Facility ID No:
P. Kay Metal, Inc.	P. Kay Metal Lewiston	

4. Brief Project Description:	Construction of a new metals manufacturing facility.

EMISSIONS UNIT (PROCESS) IDENTIFICATION & DESCRIPTION

5.	Emissions Unit (EU) Name:	HOLDING KETTLE
6.	EU ID Number:	KETTLE 9
7.	EU Type:	☒ New Source ☐ Unpermitted Existing Source ☐ Modification to a Permitted Source -- Previous Permit #: Date Issued:
8.	Manufacturer:	ECLIPSE RATIO AIR BURNERS ATTACHMENT 7-17
9.	Model:	RA0200
10..	Maximum Capacity:	50,000 LBS
11.	Date of Construction:	BETWEEN NOVEMBER 2016 AND MARCH 2017
12.	Date of Modification (if any):	
13.	Is this a Controlled Emission Unit?	☐ No ☒ Yes If Yes, complete the following section. If No, go to line 22.

EMISSIONS CONTROL EQUIPMENT

14. Control Equipment Name and ID:	Holding Kettle Room Baghouse
15. Date of Installation:	March 2017 16. Date of Modification (if any):
17. Manufacturer and Model Number:	CAMCORP Model 42TR10x630
18. ID(s) of Emission Unit Controlled:	Holding
19. Is operating schedule different than emission units(s) involved?	☐ Yes ☒ No
20. Does the manufacturer guarantee the control efficiency of the control equipment?	☒ Yes ☐ No (If Yes, attach and label manufacturer guarantee)

	Pollutant Controlled					
	PM	PM10	SO_2	NOx	VOC	CO
Control Efficiency	99%	99%				

21. If manufacturer's data is not available, attach a separate sheet of paper to provide the control equipment design specifications and performance data to support the above mentioned control efficiency. Attachment 7-32

EMISSION UNIT OPERATING SCHEDULE (hours/day, hours/year, or other)

22.	Actual Operation:	24 HOURS PER DAY, 6 DAYS PER WEEK, 50 WEEKS PER YR
23.	Maximum Operation:	24 HOURS PER DAY, 7 DAYS PER WEEK, 52 WEEKS PER YR

REQUESTED LIMITS

24.	Are you requesting any permit limits?	☒ Yes ☐ No (If Yes, indicate all that apply below)
	☐ Operation Hour Limit(s):	
	☐ Production Limit(s):	131838 TPY
	☐ Material Usage Limit(s):	
	☐ Limits Based on Stack Testing:	Please attach all relevant stack testing summary reports
	☐ Other:	
25.	Rationale for Requesting the Limit(s):	TO DEFINE AND LIMIT ANNUAL EMISSIONS

DEQ AIR QUALITY PROGRAM
1410 N. Hilton, Boise, ID 83706
For assistance, call the
Air Permit Hotline – 1-877-5PERMIT

Emissions Unit - General **Form EU0**
Revision 4
08/28/08

Please see instructions on page 2 before filling out the form.

IDENTIFICATION

1. Company Name:	2. Facility Name:	3. Facility ID No:
P. Kay Metal, Inc.	P. Kay Metal Lewiston	

4. Brief Project Description:	Construction of a new metals manufacturing facility.

EMISSIONS UNIT (PROCESS) IDENTIFICATION & DESCRIPTION

5.	Emissions Unit (EU) Name:	HOLDING KETTLE
6.	EU ID Number:	KETTLE 10
7.	EU Type:	☒ New Source ☐ Unpermitted Existing Source ☐ Modification to a Permitted Source -- Previous Permit #: Date Issued:
8.	Manufacturer:	ECLIPSE RATIO AIR BURNERS ATTACHMENT 7-23
9.	Model:	RA0100
10..	Maximum Capacity:	12,000 LBS
11.	Date of Construction:	BETWEEN NOVEMBER 2016 AND MARCH 2017
12.	Date of Modification (if any):	
13.	Is this a Controlled Emission Unit?	☐ No ☒ Yes If Yes, complete the following section. If No, go to line 22.

EMISSIONS CONTROL EQUIPMENT

14. Control Equipment Name and ID:	Holding Kettle Room Baghouse
15. Date of Installation:	March 2017 16. Date of Modification (if any):
17. Manufacturer and Model Number:	CAMCORP Model 42TR10x630
18. ID(s) of Emission Unit Controlled:	Holding
19. Is operating schedule different than emission units(s) involved?	☐ Yes ☒ No
20. Does the manufacturer guarantee the control efficiency of the control equipment?	☒ Yes ☐ No (If Yes, attach and label manufacturer guarantee)

	Pollutant Controlled					
	PM	PM10	SO_2	NOx	VOC	CO
Control Efficiency	99%	99%				

21. If manufacturer's data is not available, attach a separate sheet of paper to provide the control equipment design specifications and performance data to support the above mentioned control efficiency. Attachment 7-32

EMISSION UNIT OPERATING SCHEDULE (hours/day, hours/year, or other)

22.	Actual Operation:	24 HOURS PER DAY, 6 DAYS PER WEEK, 50 WEEKS PER YR
23.	Maximum Operation:	24 HOURS PER DAY, 7 DAYS PER WEEK, 52 WEEKS PER YR

REQUESTED LIMITS

24.	Are you requesting any permit limits?	☒ Yes ☐ No (If Yes, indicate all that apply below)
	☐ Operation Hour Limit(s):	
	☐ Production Limit(s):	131838 TPY
	☐ Material Usage Limit(s):	
	☐ Limits Based on Stack Testing:	Please attach all relevant stack testing summary reports
	☐ Other:	
25.	Rationale for Requesting the Limit(s):	TO DEFINE AND LIMIT ANNUAL EMISSIONS

DEQ AIR QUALITY PROGRAM
1410 N. Hilton, Boise, ID 83706
For assistance, call the
Air Permit Hotline – 1-877-5PERMIT

Emissions Unit - General **Form EU0**
Revision 4
08/28/08

Please see instructions on page 2 before filling out the form.

IDENTIFICATION

1. Company Name:	2. Facility Name:	3. Facility ID No:
P. Kay Metal, Inc.	P. Kay Metal Lewiston	

4. Brief Project Description:	Construction of a new metals manufacturing facility.

EMISSIONS UNIT (PROCESS) IDENTIFICATION & DESCRIPTION

5.	Emissions Unit (EU) Name:	HOLDING KETTLE
6.	EU ID Number:	KETTLE 11
7.	EU Type:	☒ New Source ☐ Unpermitted Existing Source ☐ Modification to a Permitted Source -- Previous Permit #: Date Issued:
8.	Manufacturer:	ECLIPSE RATIO AIR BURNERS ATTACHMENT 7-23
9.	Model:	RA0100
10..	Maximum Capacity:	12,000 LBS
11.	Date of Construction:	BETWEEN NOVEMBER 2016 AND MARCH 2017
12.	Date of Modification (if any):	
13.	Is this a Controlled Emission Unit?	☐ No ☒ Yes If Yes, complete the following section. If No, go to line 22.

EMISSIONS CONTROL EQUIPMENT

14. Control Equipment Name and ID:	Holding Kettle Room Baghouse
15. Date of Installation:	March 2017 16. Date of Modification (if any):
17. Manufacturer and Model Number:	CAMCORP Model 42TR10x630
18. ID(s) of Emission Unit Controlled:	Holding
19. Is operating schedule different than emission units(s) involved?	☐ Yes ☒ No
20. Does the manufacturer guarantee the control efficiency of the control equipment?	☒ Yes ☐ No (If Yes, attach and label manufacturer guarantee)

	Pollutant Controlled					
	PM	PM10	SO_2	NOx	VOC	CO
Control Efficiency	99%	99%				

21. If manufacturer's data is not available, attach a separate sheet of paper to provide the control equipment design specifications and performance data to support the above mentioned control efficiency. Attachment 7-32

EMISSION UNIT OPERATING SCHEDULE (hours/day, hours/year, or other)

22.	Actual Operation:	24 HOURS PER DAY, 6 DAYS PER WEEK, 50 WEEKS PER YR
23.	Maximum Operation:	24 HOURS PER DAY, 7 DAYS PER WEEK, 52 WEEKS PER YR

REQUESTED LIMITS

24.	Are you requesting any permit limits?	☒ Yes ☐ No (If Yes, indicate all that apply below)
	☐ Operation Hour Limit(s):	
	☐ Production Limit(s):	131838 TPY
	☐ Material Usage Limit(s):	
	☐ Limits Based on Stack Testing:	Please attach all relevant stack testing summary reports
	☐ Other:	
25.	Rationale for Requesting the Limit(s):	TO DEFINE AND LIMIT ANNUAL EMISSIONS

DEQ AIR QUALITY PROGRAM
1410 N. Hilton, Boise, ID 83706
For assistance, call the
Air Permit Hotline – 1-877-5PERMIT

Emissions Unit - General **Form EU0**
Revision 4
08/28/08

Please see instructions on page 2 before filling out the form.

IDENTIFICATION

1. Company Name:	2. Facility Name:	3. Facility ID No:
P. Kay Metal, Inc.	P. Kay Metal Lewiston	

4. Brief Project Description:	Construction of a new metals manufacturing facility.

EMISSIONS UNIT (PROCESS) IDENTIFICATION & DESCRIPTION

5.	Emissions Unit (EU) Name:	HOLDING KETTLE
6.	EU ID Number:	KETTLE 12
7.	EU Type:	☒ New Source ☐ Unpermitted Existing Source ☐ Modification to a Permitted Source -- Previous Permit #: Date Issued:
8.	Manufacturer:	ECLIPSE RATIO AIR BURNERS ATTACHMENT 7-3
9.	Model:	RA0100
10..	Maximum Capacity:	2,000 LBS
11.	Date of Construction:	BETWEEN NOVEMBER 2016 AND MARCH 2017
12.	Date of Modification (if any):	
13.	Is this a Controlled Emission Unit?	☐ No ☒ Yes If Yes, complete the following section. If No, go to line 22.

EMISSIONS CONTROL EQUIPMENT

14. Control Equipment Name and ID:	Holding Kettle Room Baghouse
15. Date of Installation:	March 2017 16. Date of Modification (if any):
17. Manufacturer and Model Number:	CAMCORP Model 42TR10x630
18. ID(s) of Emission Unit Controlled:	Holding
19. Is operating schedule different than emission units(s) involved?	☐ Yes ☒ No
20. Does the manufacturer guarantee the control efficiency of the control equipment?	☒ Yes ☐ No (If Yes, attach and label manufacturer guarantee)

	Pollutant Controlled					
	PM	PM10	SO_2	NOx	VOC	CO
Control Efficiency	99%	99%				

21. If manufacturer's data is not available, attach a separate sheet of paper to provide the control equipment design specifications and performance data to support the above mentioned control efficiency. Attachment 7-32

EMISSION UNIT OPERATING SCHEDULE (hours/day, hours/year, or other)

22.	Actual Operation:	24 HOURS PER DAY, 6 DAYS PER WEEK, 50 WEEKS PER YR
23.	Maximum Operation:	24 HOURS PER DAY, 7 DAYS PER WEEK, 52 WEEKS PER YR

REQUESTED LIMITS

24.	Are you requesting any permit limits?	☒ Yes ☐ No (If Yes, indicate all that apply below)
	☐ Operation Hour Limit(s):	
	☐ Production Limit(s):	131838 TPY
	☐ Material Usage Limit(s):	
	☐ Limits Based on Stack Testing:	Please attach all relevant stack testing summary reports
	☐ Other:	
25.	Rationale for Requesting the Limit(s):	TO DEFINE AND LIMIT ANNUAL EMISSIONS

DEQ AIR QUALITY PROGRAM
1410 N. Hilton, Boise, ID 83706
For assistance, call the
Air Permit Hotline – 1-877-5PERMIT

Emissions Unit - General **Form EU0**
Revision 4
08/28/08

Please see instructions on page 2 before filling out the form.

IDENTIFICATION

1. Company Name:	2. Facility Name:	3. Facility ID No:
P. Kay Metal, Inc.	P. Kay Metal Lewiston	

4. Brief Project Description:	Construction of a new metals manufacturing facility.

EMISSIONS UNIT (PROCESS) IDENTIFICATION & DESCRIPTION

5.	Emissions Unit (EU) Name:	EXTRUDERS
6.	EU ID Number:	EXT1, EXT2, EXT3, EXT4, EXT5, EXT6
7.	EU Type:	☒ New Source ☐ Unpermitted Existing Source ☐ Modification to a Permitted Source -- Previous Permit #: Date Issued:
8.	Manufacturer:	
9.	Model:	
10..	Maximum Capacity:	400 LBS
11.	Date of Construction:	BETWEEN NOVEMBER 2016 AND MARCH 2017
12.	Date of Modification (if any):	
13.	Is this a Controlled Emission Unit?	☒ No ☐ Yes If Yes, complete the following section. If No, go to line 22.

EMISSIONS CONTROL EQUIPMENT

14. Control Equipment Name and ID:		
15. Date of Installation:	March 2017	16. Date of Modification (if any):
17. Manufacturer and Model Number:		
18. ID(s) of Emission Unit Controlled:		
19. Is operating schedule different than emission units(s) involved?	☐ Yes ☐ No	
20. Does the manufacturer guarantee the control efficiency of the control equipment?	☐ Yes ☐ No (If Yes, attach and label manufacturer guarantee)	

	Pollutant Controlled					
	PM	PM10	SO_2	NOx	VOC	CO
Control Efficiency						

21. If manufacturer's data is not available, attach a separate sheet of paper to provide the control equipment design specifications and performance data to support the above mentioned control efficiency.

EMISSION UNIT OPERATING SCHEDULE (hours/day, hours/year, or other)

22.	Actual Operation:	24 HOURS PER DAY, 6 DAYS PER WEEK, 50 WEEKS PER YR
23.	Maximum Operation:	24 HOURS PER DAY, 7 DAYS PER WEEK, 52 WEEKS PER YR

REQUESTED LIMITS

24.	Are you requesting any permit limits?	☒ Yes ☐ No (If Yes, indicate all that apply below)
	☐ Operation Hour Limit(s):	
	☐ Production Limit(s):	131838 TPY
	☐ Material Usage Limit(s):	
	☐ Limits Based on Stack Testing:	Please attach all relevant stack testing summary reports
	☐ Other:	
25.	Rationale for Requesting the Limit(s):	TO DEFINE AND LIMIT ANNUAL EMISSIONS

DEQ AIR QUALITY PROGRAM
1410 N. Hilton, Boise, ID 83706
For assistance, call the
Air Permit Hotline – 1-877-5PERMIT

Baghouse Control Equipment **Form BCE**
Revision 6
2/18/10

Complete this form for each baghouse. Please see instructions on page 2 before filling out the form.

IDENTIFICATION

1. Company Name	2. Facility Name:
P. Kay Metal, Inc.	P. Kay Metal Lewiston

3. Brief Project Description: Construction of a new metals manufacturing facility.

BAGHOUSE INFORMATION

4. Baghouse Manufacturer: CAMCORP	5. Baghouse Model: 70TR10x1050	6. Baghouse Equipment ID: ROTARY

7 (a). Baghouse particulate matter emission concentration. **Note: Provide information in 7(a)-(c) or answer question #8 below.**	_____ gr/dscf	*Manufacturers typically provide guarantees in grains per dry standard cubic foot (gr/dscf). Provide a copy of the guarantee, or other documentation, with the application along with a description of the types of bags that must be used to achieve the emission concentration.* ***Emission concentrations less than 0.01 gr/dscf will receive additional scrutiny by DEQ and a source test of the baghouse may be required.*** *If a guarantee is not provided then you must document how you obtained the emission concentration. Without documentation the application is not complete.*
7 (b). Percentage PM_{10} Or Provide PM_{10} Emission Concentration	_____ % _____ gr/dscf	*What percentage of the PM concentration listed in question #7(a) is PM_{10}. You must provide documentation as to how the percentage was determined (i.e per the baghouse manufacturer). Without documentation the application is not complete.*
7 (c). Baghouse flow rate	_____ dscfm	*Provide the baghouse flow rate in dry standard cubic feet per minute. Actual cubic feet per minute may be given in lieu of dscfm* ***if it is documented*** *that moisture content is insignificant. You must provide documentation as to how this flow rate was determined (i.e. per the exhaust fan manufacturer, combustion evaluation, etc.). Without documentation the application is not complete.*
8. Baghouse particulate matter control efficiency. **Note: Not needed if section #7 is completed.**	99 % PM control 99 % PM_{10} control	*Applicant's providing the control efficiency of the baghouse must provide control efficiency for both PM and PM_{10}. Provide a copy of the control efficiency documentation with the application. Documentation must include a description of the types of bags that must be used to achieve the control efficiency. Without documentation the application is not complete.*
9. Is the baghouse equipped with a bag leak detector?	☒ Yes ☐ No	*If a bag leak detector is installed provide documentation on the leak detector, including; how the leak detector functions and what level of the output signal indicates that a bag is leaking. Without documentation the application is not complete.*

DEQ AIR QUALITY PROGRAM
1410 N. Hilton, Boise, ID 83706
For assistance, call the
Air Permit Hotline – 1-877-5PERMIT

Baghouse Control Equipment **Form BCE**
Revision 6
2/18/10

Complete this form for each baghouse. Please see instructions on page 2 before filling out the form.

IDENTIFICATION

1. Company Name	2. Facility Name:
P. Kay Metal, Inc.	P. Kay Metal Lewiston

3. Brief Project Description: Construction of a new metals manufacturing facility.

BAGHOUSE INFORMATION

4. Baghouse Manufacturer: CAMCORP	5. Baghouse Model: 42TR10x630	6. Baghouse Equipment ID: HOLDING

7 (a). Baghouse particulate matter emission concentration. **Note: Provide information in 7(a)-(c) or answer question #8 below.**	_____ gr/dscf	*Manufacturers typically provide guarantees in grains per dry standard cubic foot (gr/dscf). Provide a copy of the guarantee, or other documentation, with the application along with a description of the types of bags that must be used to achieve the emission concentration.* ***Emission concentrations less than 0.01 gr/dscf will receive additional scrutiny by DEQ and a source test of the baghouse may be required.*** *If a guarantee is not provided then you must document how you obtained the emission concentration. Without documentation the application is not complete.*
7 (b). Percentage PM_{10} Or Provide PM_{10} Emission Concentration	_____ % _____ gr/dscf	*What percentage of the PM concentration listed in question #7(a) is PM_{10}. You must provide documentation as to how the percentage was determined (i.e per the baghouse manufacturer). Without documentation the application is not complete.*
7 (c). Baghouse flow rate	_____ dscfm	*Provide the baghouse flow rate in dry standard cubic feet per minute. Actual cubic feet per minute may be given in lieu of dscfm* ***if it is documented*** *that moisture content is insignificant. You must provide documentation as to how this flow rate was determined (i.e. per the exhaust fan manufacturer, combustion evaluation, etc.). Without documentation the application is not complete.*
8. Baghouse particulate matter control efficiency. **Note: Not needed if section #7 is completed.**	99 % PM control 99 % PM_{10} control	*Applicant's providing the control efficiency of the baghouse must provide control efficiency for both PM and PM_{10}. Provide a copy of the control efficiency documentation with the application. Documentation must include a description of the types of bags that must be used to achieve the control efficiency. Without documentation the application is not complete.*
9. Is the baghouse equipped with a bag leak detector?	☒ Yes ☐ No	*If a bag leak detector is installed provide documentation on the leak detector, including; how the leak detector functions and what level of the output signal indicates that a bag is leaking. Without documentation the application is not complete.*

DEQ AIR QUALITY PROGRAM
1410 N. Hilton, Boise, ID 83706
For assistance, call the
Air Permit Hotline – 1-877-5PERMIT

Baghouse Control Equipment **Form BCE**
Revision 6
2/18/10

Complete this form for each baghouse. Please see instructions on page 2 before filling out the form.

IDENTIFICATION

1. Company Name	2. Facility Name:
P. Kay Metal, Inc.	P. Kay Metal Lewiston

3. Brief Project Description: Construction of a new metals manufacturing facility.

BAGHOUSE INFORMATION

4. Baghouse Manufacturer: CAMCORP	5. Baghouse Model: CA30	6. Baghouse Equipment ID: FUGITIVE

7 (a). Baghouse particulate matter emission concentration. **Note: Provide information in 7(a)-(c) or answer question #8 below.**	_____ gr/dscf	*Manufacturers typically provide guarantees in grains per dry standard cubic foot (gr/dscf). Provide a copy of the guarantee, or other documentation, with the application along with a description of the types of bags that must be used to achieve the emission concentration.* ***Emission concentrations less than 0.01 gr/dscf will receive additional scrutiny by DEQ and a source test of the baghouse may be required.*** *If a guarantee is not provided then you must document how you obtained the emission concentration. Without documentation the application is not complete.*
7 (b). Percentage PM_{10} Or Provide PM_{10} Emission Concentration	_____ % _____ gr/dscf	*What percentage of the PM concentration listed in question #7(a) is PM_{10}. You must provide documentation as to how the percentage was determined (i.e per the baghouse manufacturer). Without documentation the application is not complete.*
7 (c). Baghouse flow rate	_____ dscfm	*Provide the baghouse flow rate in dry standard cubic feet per minute. Actual cubic feet per minute may be given in lieu of dscfm* ***if it is documented*** *that moisture content is insignificant. You must provide documentation as to how this flow rate was determined (i.e. per the exhaust fan manufacturer, combustion evaluation, etc.). Without documentation the application is not complete.*
8. Baghouse particulate matter control efficiency. **Note: Not needed if section #7 is completed.**	99 % PM control 99 % PM_{10} control	*Applicant's providing the control efficiency of the baghouse must provide control efficiency for both PM and PM_{10}. Provide a copy of the control efficiency documentation with the application. Documentation must include a description of the types of bags that must be used to achieve the control efficiency. Without documentation the application is not complete.*
9. Is the baghouse equipped with a bag leak detector?	☒ Yes ☐ No	*If a bag leak detector is installed provide documentation on the leak detector, including; how the leak detector functions and what level of the output signal indicates that a bag is leaking. Without documentation the application is not complete.*

	DEQ AIR QUALITY PROGRAM 1410 N. Hilton, Boise, ID 83706 For assistance, call the **Air Permit Hotline - 1-877-5PERMIT**	**PERMIT TO CONSTRUCT APPLICATION** Revision 3 4/5/2007

Please see instructions on page 2 before filling out the form.

Company Name:	P. Kay Metal, Inc.
Facility Name:	P. Kay Metal, Lewiston
Facility ID No.:	NA
Brief Project Description:	Construction of a new metals manufacturing facility

SUMMARY OF AIR IMPACT ANALYSIS RESULTS - CRITERIA POLLUTANTS

		1.		2.	3.	4.		5.
Criteria Pollutants	**Averaging Period**	**Significant Impact Analysis Results (µg/m3)**	**Significant Contribution Level (µg/m3)**	**Full Impact Analysis Results (µg/m3)**	**Background Concentration (µg/m3)**	**Total Ambient Impact (µg/m3)**	**NAAQS (µg/m3)**	**Percent of NAAQS**
NO_2	1-hr			54.00	55.00	109.00	188	57.98%
	Annual			3.90	7.50	11.40	100	11.40%

DEQ AIR QUALITY PROGRAM
1410 N. Hilton, Boise, ID 83706
For assistance, call the
Air Permit Hotline - 1-877-5PERMIT

PERMIT TO CONSTRUCT APPLICATION
Revision 3
3/27/2007

Please see instructions on page 2 before filling out the form.

Company Name:	P. Kay Metal, Inc.
Facility Name:	P. Kay Metal, Lewiston
Facility ID No.:	NA
Brief Project Description:	Construction of a new metals manufacturing facility

POINT SOURCE STACK PARAMETERS

1.	2.	3a.	3b.	4.	5.	6.	7.	8.	9.	10.
Emissions units	**Stack ID**	**UTM Easting (m)**	**UTM Northing (m)**	**Base Elevation (m)**	**Stack Height (m)**	**Modeled Diameter (m)**	**Stack Exit Temperature (K)**	**Stack Exit Flowrate (acfm)**	**Stack Exit Velocity (m/s)**	**Stack orientation (e.g., horizontal, rain cap)**
Point Source(s)										
Rotary Furnace Baghouse	ROTARY	497527	5134726	444.13	7.60	0.90	422.00	50,000.00	35.90	Vertical
Holding Kettle Room Baghouse	HOLDING	497475	5134780	445.36	7.60	0.90	298.00	30,000.00	21.60	Vertical
Fugitive Baghouse	FUGITIVE	497490	5134764	444.95	7.60	0.80	298.00	25,000.00	25.90	Vertical
Extruders	EXTRUDE	497490.43	5134794.96	446.64	7.60	0.80	298.00	1,000.00	1.00	Vertical
(insert more rows as needed)										

	DEQ AIR QUALITY PROGRAM 1410 N. Hilton, Boise, ID 83706 For assistance, call the **Air Permit Hotline - 1-877-5PERMIT**	**PERMIT TO CONSTRUCT APPLICATION** Revision 3 4/5/2007

Please see instructions on page 2 before filling out the form.

Company Name:	P. Kay Metal, Inc.
Facility Name:	P. Kay Metal, Lewiston
Facility ID No.:	NA
Brief Project Description:	Construction of a new metals manufacturing facility

FUGITIVE SOURCE PARAMETERS

1.	2.	3a.	3b.	4.	5.	6.	7.	8.	9.	10.
Emissions units	**Stack ID**	**UTM Easting (m)**	**UTM Northing (m)**	**Base Elevation (m)**	**Release Height (m)**	**Easterly Length (m)**	**Northerly Length (m)**	**Angle from North (°)**	**Initial Vertical Dimension (m)**	**Initial Horizontal Dimension (m)**
Area Source(s)										
name of the emissions unit1										
name of the emissions unit2										
name of the emissions unit3										
name of the emissions unit4										
name of the emissions unit5										
name of the emissions unit6										
name of the emissions unit7										
name of the emissions unit8										
name of the emissions unit9										
name of the emissions unit10										
Volume Source(s)										
name of the emissions unit11										
name of the emissions unit12										
name of the emissions unit13										
name of the emissions unit14										
name of the emissions unit15										
name of the emissions unit16										
name of the emissions unit17										
name of the emissions unit18										
name of the emissions unit19										

DEQ AIR QUALITY PROGRAM
1410 N. Hilton, Boise, ID 83706
For assistance, call the
Air Permit Hotline - 1-877-5PERMIT

PERMIT TO CONSTRUCT APPLICATION

Revision 3
4/5/2007

Please see instructions on page 2 before filling out the form.

Company Name:	P. Kay Metal, Inc.
Facility Name:	P. Kay Metal, Lewiston
Facility ID No.:	NA
Brief Project Description:	Construction of New Metals Manufacturing Facility

BUILDING AND STRUCTURE INFORMATION

1.	2.	3.	4.	5.	6.	7.
Building ID Number	**Length (ft)**	**Width (ft)**	**Base Elevation (m)**	**Building Height (m)**	**Number of Tiers**	**Description/Comments**
Build1	465.00	172.00	446.29	6.10	1	

IDAHO DEPARTMENT OF ENVIRONMENTAL QUALITY
AIR QUALITY DIVISION
1410 N. Hilton, Boise, ID 83706
For assistance, call the
Air Permit Hotline – 1-877-5PERMIT

Preapplication Meeting Information Form FRA (Federal Requirements Applicability) - Regulatory Review

In each box in the table below, CTRL+click on the blue underlined text for instructions and information.

IDENTIFICATION	
1. Company Name:	2. Facility Name:
P. Kay Metal, Inc.	P. Kay Metal Lewiston
3. Brief Project Description:	Construction of a new metals manufacturing facility.

APPLICABILITY DETERMINATION	
4. List all applicable subparts of the New Source Performance Standards (NSPS) (40 CFR part 60). List all non-applicable subparts of the NSPS which may appear to apply to the facility but do not. Examples of NSPS-affected emissions units include internal combustion engines, boilers, turbines, etc. Applicant must thoroughly review the list of affected emissions units.	List of all applicable subpart(s): Subpart A Subpart L List of all non-applicable subpart(s) which may appear to apply but do not: ☐ Not Applicable
5. List applicable subpart(s) of the National Emission Standards for Hazardous Air Pollutants (NESHAPs) (40 CFR part 61 and 40 CFR part 63). List all non-applicable subparts of the NESHAP which may appear to apply to the facility but do not. Examples of affected emission units include solvent cleaning operations, industrial cooling towers, paint stripping and miscellaneous surface coating. Reference EPA's webpage on NESHAPs for more information.	List of all applicable subpart(s): 40 CFR 63 Subpart A List of all non-applicable subpart(s) which may appear to apply but do not: 40 CFR 63 Subparts X, XXXXXX, YYYYY, ZZZZ, ZZZZZZ ☑ Not Applicable
6. For each subpart identified above, conduct a complete regulatory analysis using the instructions and referencing the example on the following pages. **Note** - Regulatory reviews must be submitted with sufficient detail so that DEQ can verify applicability and document in legal terms why the regulation does or does not apply. Regulatory reviews submitted with insufficient detail will be determined incomplete.	☑ A detailed regulatory review is provided (Follow instructions and example). ☐ DEQ has already been provided a detailed regulatory review. Give a reference to the document including the date.

Department of Environmental Quality - Air Quality Division
Toxic Air Pollutant (TAP) Preconstruction Compliance Application Completeness Checklist

This checklist is designed to aid the applicant in submitting a complete preconstruction compliance demonstration for toxic air pollutants (TAPs) in permit to construct applications. The applicant must place a check mark in the box for each section below that applies.

I. Actions Needed Before Submitting Application

☒ Refer to the Rule. Read the Demonstration of Preconstruction Compliance with Toxic Standards contained in IDAPA 58.01.01.210 (Rules Section 210) Rules for the Control of Air Pollution in Idaho (Rules). Toxic air pollutants (TAPs) are regulated in accordance with Rules Section 210 only from emission units constructed or modified on or after July 1, 1995.

Determine if a new (constructed after June 30, 1995) emission unit has the potential to emit a TAP listed in IDAPA 58.01.01.585 (Rules Section 585) or IDAPA 58.0101.586 (Rules Section 586). Potential toxic air pollutants can be determined by reviewing commonly available emission factors, such as EPA's AP-42, or calculating emissions using a mass balance. For TAPs that are emitted but not listed in Rules Section 585 and 586, contact the Air Permit Hotline at 877-5PERMIT.

Determine if the proposed construction or modification is exempt from the need to obtain a permit to construct in accordance with IDAPA 58.01.01.220-223. Use the Exemption Criteria and Reporting Requirements for TAPs IDAPA 58.01.01.223 checklist to assist you in the exemption determination. If the source does not qualify for an exemption in accordance with IDAPA 58.01.01.220-223 complete the following checklist and submit it with the permit application. Please note that fugitive TAP emissions are not included in the IDAPA 58.01.01.223 exemption determination, but fugitive TAP emissions are included in the analysis if a permit is required. Stated another way: if a source is required to obtain a Permit to Construct because it does not meet the exemption criteria for any reason all TAP emissions, including fugitive TAPs, are included in the compliance demonstration in the application for the permit to construct. Should you have any questions regarding the fact that all TAPs, including fugitive TAPs, are included in the TAP preconstruction compliance demonstration submitted with a permit to construct application you may call the Air Permit Hotline at 877-5PERMIT.

Will the new or modified source result in new or increased potential emissions of TAPs?

☒ Yes. If yes, continue to section II.

☐ No. If no, no further action is required.

II. Application Content

If a new source has the potential to emit a TAP, or if a modification to an existing source increases the potential to emit of a TAP, then one of the following methods (A-J) of demonstrating TAP preconstruction compliance must be documented for each TAP. Standard methods are one of A-C. The applicant may also use one of the specialized methods in D-J. Fugitive TAP emissions shall be included in the analysis. The compliance methods are based on the requirements of Rules Section 210. Applicants are often able to demonstrate preconstruction TAP compliance using a combination of methods A and B.

Emission Calculations

Emissions calculation methodologies used are dependent on whether a specific TAP is a non-carcinogen or a carcinogen and whether the compliance method chosen from the list below calls

for controlled or uncontrolled emissions. Non-carcinogens are regulated based on a 24-hour averaging period and emission rates used for comparison to the non-carcinogen screening emissions level (EL) should be the maximum controlled or uncontrolled emissions quantity during any 24-hour period divided by 24. Carcinogens are regulated as a long term increment and emission rates used for comparison to the carcinogen EL should be the maximum controlled or uncontrolled emissions quantity during any 1 year period divided by 8760.

Modeling Analyses

Atmospheric dispersion modeling is required when controlled TAP emissions rates exceed ELs. Modeling analyses should be conducted in accordance with IDAPA 58.01.01.210.03. Quantification of Ambient Concentrations and the State of Idaho Air Quality Modeling Guideline (http;//www.deq.idaho.gov/air/data_reports/publications.cfm#model). For non-carcinogen 24-hour increments, compliance is demonstrated using the maximum modeled 24-hour-averaged concentration from available meteorological data (typically a five-year data set). For carcinogen long-term increments, compliance is demonstrated using the maximum modeled average concentration for the duration of the data set (one-year to five-year data set).

A submitted modeling report should clearly specify modeled emissions rates and results. All electronic model input files should be submitted, including BPIP input files.

Poly aromatic Hydrocarbons

Questions often arise regarding polyaromatic hydrocarbons as they are listed in Rules Section 586 of the Rules. The following two points are provided for clarification.

1) The following group of 7 PAH's (i.e. named POM), shall be combined and considered as one TAP equivalent in potency to benzo(a)pryrene:

   Benzo(a)anthracene, benzo(b)fluoranthene, benzo(k)fluoranthene, dibenzo(a, h) anthrancene, chrysene, indeno(1,2,3,-cd) pyrene, benzo (a) pyrene

2) All other PAH's are considered as a single pollutant and the emission of each is compared the PAH increment listed in Rules Section 586.

Compliance Methods

Fill in letter(s) (A-J) from the list below for TAP compliance demonstration method(s) used: A,C.

A. TAPs Compliance Using Uncontrolled Emissions (Rules Section 210.05)

☒ Calculate the uncontrolled emissions (Rules Section 210.05) of each TAP from new emissions units. Uncontrolled emission rates are emissions at maximum capacity without the effect of physical or operational limitations. See Quantification of Emission Rates (Rules Section 210.02). Show calculations and state all assumptions.

☐ Calculate the increase of TAP emissions from modified emissions units. Show calculations and state all assumptions. The increase in emissions for a modified emission unit is determined by subtracting the potential to emit the TAP before the modification from the uncontrolled potential to emit after the modification. In conducting this analysis please note the following for TAP emission rate increase determinations:

Uncontrolled emission rates after the modification are emissions at maximum capacity without the effect of physical or operational limitations.

When determining the emissions increase from existing permitted emissions units the emission rate before the modification is equivalent to the emission limits contained in the permit for the

TAPs or, if there no emission limits in the permit, by determining what the emission rate is under the physical or operational limitations contained in the permit.

☐ Aggregate the uncontrolled emissions for each TAP from all new emissions units with the increase in emissions from all modified emissions units.

☒ If the aggregated emissions increase for each TAP from the new and modified units, as determined above, are less than or equal to the respective TAP screening emissions level (EL) then preconstruction compliance with toxic standards has been demonstrated and no further analysis is required. Submit a table comparing the uncontrolled emissions rate to the applicable EL.

If aggregated emissions are greater than the respective screening emissions level (EL) for any pollutants, use another compliance demonstration method for those pollutants, such as methods B, C, or D.

B. TAP Compliance Using Uncontrolled Ambient Concentration (Rules Section 210.06)

☐ Determine the uncontrolled emissions of each TAP from new emission units and the increase in emissions from all modified emissions units as described above in compliance Method A. Show calculations and state all assumptions.

☐ Model the uncontrolled emissions of each TAP from new emissions units and the increase in emissions from all modified emissions units.

☐ If the uncontrolled ambient concentration is less than or equal to the acceptable ambient concentration increment listed in Rules Section 585 and 586 no further procedures for demonstrating preconstruction compliance will be required for that TAP as part of the application process. Submit a table comparing uncontrolled ambient concentrations to the applicable acceptable ambient concentration.

C. TAP Compliance Using Controlled Ambient Concentrations (Rules Section 210.08)

☒ Determine the controlled emissions from new emissions units and the controlled emission increase from modified emissions units. Show all calculations and state all assumptions, including the control methods.

☒ Model the controlled emissions of each TAP from new emissions units and the increase in controlled emissions from all modified emissions units.

TAP emissions levels (EL) included in Rules Section 585 and 586 are derived based on generic modeling. If the sum the of emissions from new and modified sources is below the EL compliance is demonstrated without the need to conduct site-specific dispersion modeling.

☒ If the controlled ambient concentration from emission increases from new emissions units and modified emissions units is less than the applicable acceptable ambient concentration no further procedures for demonstrating preconstruction compliance are required.

☒ The Department shall include an emission limit for the TAP in the permit to construct that is equal to or, if requested by the applicant, less than the emission rate that was used in the modeling (Rules Section 210.08.c).

In some instances the Department may consider a throughput limit or other inherently-limiting operational restriction in a permit as an effective emission limit for the TAP, rather than including a specific emission rate limit.. Note that the applicant may model uncontrolled emissions as described in compliance Method B in an attempt to avoid TAPs emissions limitations.

D. TAPs Compliance for NSPS and NESHAP Sources (Rules Section 210.20)

☐ If the owner or operator demonstrates that the TAP emissions from the source or modification is regulated by 40 CFR Part 60, 40 CFR Part 61 or 40 CFR Part 63, no further procedures for demonstrating preconstruction compliance will be required for that TAP.

☐ Provide a demonstration that the TAP is regulated under 40 CFR Part 60, 40 CFR Part 61 or 40 CFR Part 63. This demonstration must be specific for each TAP emitted.

E. TAP Compliance Using Net Emissions (Rules Section 210.09)

An applicant may use TAP net emissions to show preconstruction compliance; however this analysis may require more work than some of the others procedures available to demonstrate preconstruction compliance. When netting, all emissions increases and decreases of the TAP that have occurred within five years must be included in the analysis as described below.

☐ Determine the net emission increase for a TAP. A net emissions increase shall be an emission increase from a particular modification plus any other increase and decreases in actual emissions at the facility that are creditable and contemporaneous with particular modification (Rules Section 210.09). Show all calculations and state all assumptions.

☐ A creditable increase or decrease in actual emissions is contemporaneous with a particular modification if it occurs within five (5) years of the commencement of the construction or modification (Rules Section 210.09.a).

Actual emissions are (Rules Section 006.03):

- ☐ In general, actual emissions as of a particular date shall equal the average rate, in tons per year, at which the unit actually emitted the pollutant during a two year period which precedes the particular date and which is representative of normal source operation. The Department shall allow the use of a different time period upon a determination that it is more representative of normal source operation. Actual emissions shall be calculated using the unit's actual operating hours, productions rates, and types of materials processed, stored, or combusted during the selected time period.

- ☐ The Department may presume that the source-specific allowable emissions for the unit are equivalent to actual emissions of the unit.

- ☐ For any emission unit (except electric utility steam generating units) that has not begun normal operations on the particular date, actual emissions shall equal the potential to emit of the unit on that date.

☐ Do not include emissions increases from emission units that have an uncontrolled emission rate that is 10% or less than the applicable screening emission level (EL) in Rules Section 585 and 586 (Rules Section 007.09.c.ii) and do not include emission increases from environmental remediation sources (Rules Section 007.09.c.iii). Show all calculations and state all assumptions.

☐ If the net emission increase is less than or equal to the applicable screening emissions level (EL) listed in Rules Section 585 and 586, no further procedures for demonstrating preconstruction compliance will be required (Rules Section 210.09.c).

☐ The Department shall include emission limits and other permit terms for the TAP in the permit to construct that will assure that the facility will be operated in the manner described in the preconstruction compliance demonstration (Rules Section 210.09.d).

In some instances the Department may consider a throughput limit or other inherently-limiting operational restriction in a permit as an effective emission limit for the TAP. rather than including a specific emission rate limit..

F. TAP Compliance Using Net Ambient Concentration (Rules Section 210.10)

☐ Determine the emission increase from the new source or modification, and all other creditable emission increases and decrease using the methods described above in compliance Method E.

☐ Model the emissions increases and decreases for each TAP. Modeling TAP decreases is accomplished by using negative valued emissions rates in the model input.

☐ If the net ambient concentration is less than or equal to the applicable ambient concentration increment listed in Rules Section 585 and 586, no further procedures for demonstrating preconstruction compliance are required.

☐ The Department shall include emission limits and other permit terms for the TAP in the permit to construct that will assure that the facility will be operated in the manner described in the preconstruction compliance demonstration (Rules Section 210.10.d).

In some instances the Department may consider a throughput limit or other inherently-limiting operational restriction in a permit as an effective emission limit for the TAP, rather than including a specific emission rate limit..

G. TAP Compliance Using T-RACT Ambient Concentration for Carcinogens (Rules Section 210.12)

The applicant may use T-RACT to demonstrate preconstruction compliance for TAPs listed in Rules Section 586 only.

T-RACT is an emissions standard based on the lowest emission of TAPs that a particular source is capable of meeting by application of control technology that is reasonably available, as determined by the Department, considering technological and economic feasibility. If control technology is not feasible, the emission standard may be based on the application of a design, equipment, work practice or operational requirement, or combination thereof (Rules Section 007.16).

T-RACT Submittal Requirements

☐ The applicant shall submit the following information to the Department identifying and documenting which control technologies or other requirements the applicant believes to be T-RACT (Rules Section 210.14).

The technical feasibility of a control technology or other requirements for a particular source shall be determined considering several factors including but not limited to:

- ☐ Process and operating procedures, raw materials and physical plant layout.
- ☐ The environmental impacts caused by the control technology that can not be mitigated, including but not limited to, water pollution and the production of solid wastes.
- ☐ The energy requirements of the control technology.

The economic feasibility of a control technology or other requirement, including the costs of necessary mitigation measures, for a particular source shall be determined considering several factors including, but not limited to:

- ☐ Capital costs.
- ☐ Cost effectiveness, which is the annualized cost of the control technology divided by the amount of emission reduction.
- ☐ The difference in costs between the particular source and other similar sources, if any, that have implemented emissions reductions.

☐ Compare the source's or modification's approved T-RACT ambient concentration to the applicable acceptable ambient concentration increment listed in Rules Section 586 multiplied by a factor of 10. If the sources approved T-RACT concentration is less than or equal to 10 times the applicable acceptable ambient concentration increment listed in Rules Section 586, no further procedures for demonstrating preconstruction compliance will be required.

☐ If an application is submitted to the Department without T-RACT and determined complete, and T-RACT is later determined to be applicable the completeness determination of the application will be revoked until a supplemental application is submitted and determined complete. When the supplemental application is determined complete, the timeline for agency action shall be reinitiated (Rules Section 210.13.b).

☐ If the Department determines that the source has proposed T-RACT, the Department shall develop emission standards to be incorporated into a permit to construct.

In some instances, the Department may consider a throughput limit or other inherently limiting operational restriction in a permit as an effective emission limit for the TAP, rather than including a specific emission rate limit..

H. TAP Compliance Using the Short Term Source Factor (Rules Section 210.15)

☐ For short term sources, the applicant may utilize a short term adjustment factor of ten (10) only for a carcinogenic pollutant listed in Rules Section 586. For a carcinogen listed in Rules Section 586 multiply either the applicable acceptable ambient concentration increment or the screening emission rate (EL), but not both, by ten (10) to demonstrate preconstruction compliance (Rules Section 210.15).

☐ A short term source is any new stationary source or modification to an existing source, with an operational life no greater than five (5) years from the inception of any operations to cessation of actual operations (Rules Section 210.15).

I. TAP Compliance for Environmental Remediation Sources (Rules Section 210.16)

☐ For remediation sources subject to or regulated by the Resource Conservation and Recovery Act and the Idaho Rules and Standard for Hazardous Waste, or the comprehensive Environmental Response, Compensation and Liability Act or a consent order, if the estimated ambient concentration is greater than the acceptable ambient impact increment listed in Rules Section 585 and 586, Best Available Control Technology shall be applied and operated until the estimated uncontrolled emission from the remediation source are below the applicable acceptable ambient concentration increment (Rules Section 210.16).

J. TAP Compliance Using Offset Ambient Concentration (Rules Section 210.11)

☐ Contact the Department prior to proposing to utilize Offset Ambient Concentrations to demonstrate preconstruction compliance.

☐ Emission offsets must satisfy the requirements for emission reduction credits (Rules Section 460).

- The proposed level of allowable emissions must be less than the actual emissions of the emissions units providing the offsets (Rules Section 460.01).
- An air quality permit must be issued that restricts the potential to emit of the emission unit providing the offset.
- Emission reduction imposed by local, state or federal regulations or permits shall not be allowed.

☐ Compare the source's or modifications approved emission offset ambient concentration to the applicable acceptable ambient concentration listed in Rules Section 585 and 586. If the source's or modifications approved offset concentration is less than the acceptable ambient concentration listed in Rules Section 585 and 586, no further procedures for demonstrating preconstruction compliance will be required.

☐ The Department shall include emission limits and other permit terms for the TAP in the permit to construct that will assure that the facility will be operated in the manner described in the preconstruction compliance demonstration (Rules Section 210.10.d).

Attachment #1

Facility Description

Facility Description
P. Kay Metal, Lewiston

P. Kay Metal, Inc (P. Kay Metal) is headquartered in Los Angeles, California and is a supplier of an assortment of metals as well as a metal recycling company. P. Kay Metal manufactures premium solders and lead alloys in bar and wire form for the military and a wide variety of industries including electronics and ammunition industries. The process includes melting, extruding, and casting metal into bars, wires, and billets for solder. Due to increased customer needs, P. Kay Metal intends to establish a manufacturing facility at 152 Southport Avenue in Lewiston, Idaho with an NAICS number 333992.

Production, storage, and shipping will take place in the 46,200 square foot building. Primary, secondary and scrap metal containing lead enters the process in the Rotary Furnace or one of two Refining Kettles depending on the composition and physical form of the scrap metal. The temperatures during this stage ranges from 590ºF to 1700ºF for the Rotary Furnace and 900 ºF for the kettles. Organic fluxes containing carbon, soda ash, and borax are added to the Rotary Furnace to form molten metal and a slag of impurities that can be removed and recycled, or sent offsite for disposal. A mixture of proprietary fluxes comprised of iron pyrite, sulfur, sodium nitrate, sodium hydroxide, ammonium chloride, zinc chloride, calcium chloride, or carbon can be added to the Refining Kettles, depending on the composition of the metal and the required composition of the end product. These additives help form a skin of impurities on the surface of the molten metal that can be easily skimmed off and routed for recycling or disposal. Emissions from the furnace and refining kettles are vented via cooling loops to the Rotary Furnace Baghouse.

Following the melting process, the metal is poured into one of two Alloying Kettles. Metal alloys are created depending on the client's needs. Following the alloying process, the metal mixture is poured into one of seven Holding Kettles for storage. Emissions from the Alloying and Holding Kettles are vented via cooling loops to the Holding Kettle Room Baghouse. All kettles are operated in a negative pressure room, and the air is vented to a Fugitive Baghouse.

Six continuous extruders shape the metal, usually into cylinders varying in size. Further processing is done based on the specific needs of each client.

Figure 1 is a process flow diagram of P. Kay Metal's proposed operations in Idaho. All process chemicals are listed in a table on page three. All chemicals added are consumed by the process or discharged as hazardous waste. See page five for a detailed process flow diagram.

Emissions Sources:

P. Kay Metal is requesting Permit To Construction Approval for its new facility located in Lewiston, Idaho. Emissions sources for this facility include one rotary furnace, four refining kettles, and seven holding kettles.

1. The Tilting Rotary "Super-Melter" with Swivel Base Unit 75 (Rotary Furnace) will be acquired from Mansell & Associates, and has a working capacity of 75 cubic feet of molten material, or 53,000 pounds of lead with three-inches of freeboard. The unit uses a

five-million Btu natural gas burner system with temperature controls and an NFPA safety device. A 25-hP hydraulic motor provides rotation of the barrel and a 25-hP hydraulic unit allows the unit to raise and lower as necessary. All functions of the furnace are operated through a control panel. A round hood completely encircles the furnace to direct smoke and fumes to the Rotary Furnace Baghouse.

2. Kettles including refining, alloying, and holding:
    a. Two - 200,000 pound capacity kettle, 4 MMBTU/hr (ASME SA516 Grade 70)
    b. Five - 100,000 pound capacity kettle, 3 MMBTU/hr (ASME SA516 Grade 70)
    c. One - 50,000 pound capacity kettle, 1.5 MMBTU/hr (ASME SA516 Grade 70)
    d. Two - 12,000 pound capacity kettle, 0.5 MMBTU/hr (ASME SA516 Grade 70)
    e. One - 2,000 pound capacity kettle, 0.5 MMBTU/hr (ASME SA516 Grade 70)

3. Extruders: There will be six, 400-pound capacity continuous extruders.

Emissions Control Equipment:

Since the emissions will be particulate matter, three different baghouses will control emissions at the facility.

1. Rotary Furnace Baghouse
    a. Controls emissions from rotary furnace and the two refining kettles.
    b. CAMCORP Baghouse Model #70TR10x1050
    c. Nomex filter bags
    d. Filter area: 16,800 ft^2
    e. Air-to-cloth (AC) Ratio: 2.98:1
    f. Removal efficiency: 99%
    g. Flow rate: 50,000 cfm
2. Holding Kettle Room Baghouse
    a. Controls emissions from the two alloy kettles and the seven holding kettles.
    b. CAMCORP Baghouse Model #42TR10x630
    c. Polyester filter bags
    d. Filter area: 10,080 ft^2
    e. AC Ratio 2.98:1
    f. Removal efficiency: 99%
    g. Flow rate: 30,000 cfm
3. Fugitive Baghouse
    a. Controls emissions from the production area
    b. CAMCORP Model #CA30
    c. Synthetic Blend Cartridge
    d. Filter area: 9,750 ft^2
    e. AC Ratio 2.57:1
    f. Removal efficiency: 99%
    g. Flow rate: 25,000 cfm

Operating Characteristics:

- ***Normal Operating Schedule:*** 24 hours per day, 6 days per week, 50 weeks per year or 7200 hours per year.
- ***Maximum Operating schedule:*** 24 hours per day, 7 days per week, 52 weeks per year or 8760 hours per year.
- ***Normal Production:*** 8760 tons of lead containing material per year.
- ***Maximum Production:*** 131,838 tons of lead containing material per year
- ***Process Chemicals:***

Chemical Name	CAS #	Amount Stored (lbs)
Ammonium Chloride	12125-02-9	4,000
Borax	1303-96-4	10,000
Anhydrous Calcium Chloride 94-97%	NA	1,000
Liquid Caustic Soda 50%	NA	6,000
Charcoal Powder	NA	6,000
Petroleum Coke	64741-79-3	10,000
Iron Pyrite	1309-36-0	500
Soda Ash	497-19-8	10,000
Sodium Nitrate	7631-99-4	1,000
Sulfur	7704-34-9	2,000
Zinc Chloride	7646-85-7	4,000

Additional Elements:

- ***Applicable Regulations and Monitoring Requirements:*** This source is not a PSD major source, a proposed PSD major modification, or a proposed NSR project in a non-attainment area. Based potential emissions the facility is not subject to greenhouse gas reporting. See Appendix 7 for detailed regulatory applicability.

- ***Emissions Estimate Calculations:*** See Appendix 4

Figure 1

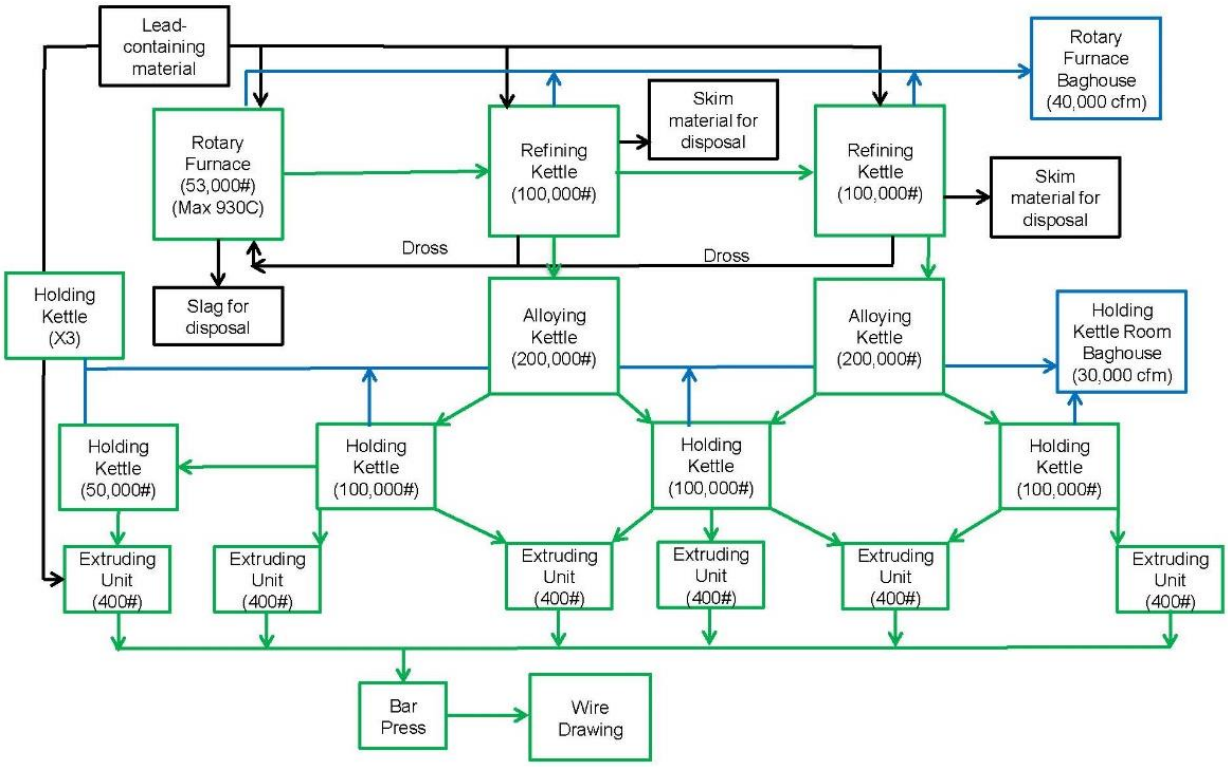
Lead-containing material
Rotary Furnace Baghouse (40,000 cfm)
Skim material for disposal
Rotary Furnace (53,000#) (Max 930C)
Refining Kettle (100,000#)
Refining Kettle (100,000#)
Skim material for disposal
Dross
Dross
Holding Kettle (X3)
Slag for disposal
Alloying Kettle (200,000#)
Alloying Kettle (200,000#)
Holding Kettle Room Baghouse (30,000 cfm)
Holding Kettle (50,000#)
Holding Kettle (100,000#)
Holding Kettle (100,000#)
Holding Kettle (100,000#)
Extruding Unit (400#)
Extruding Unit (400#)
Extruding Unit (400#)
Extruding Unit (400#)
Extruding Unit (400#)
Extruding Unit (400#)
Bar Press
Wire Drawing

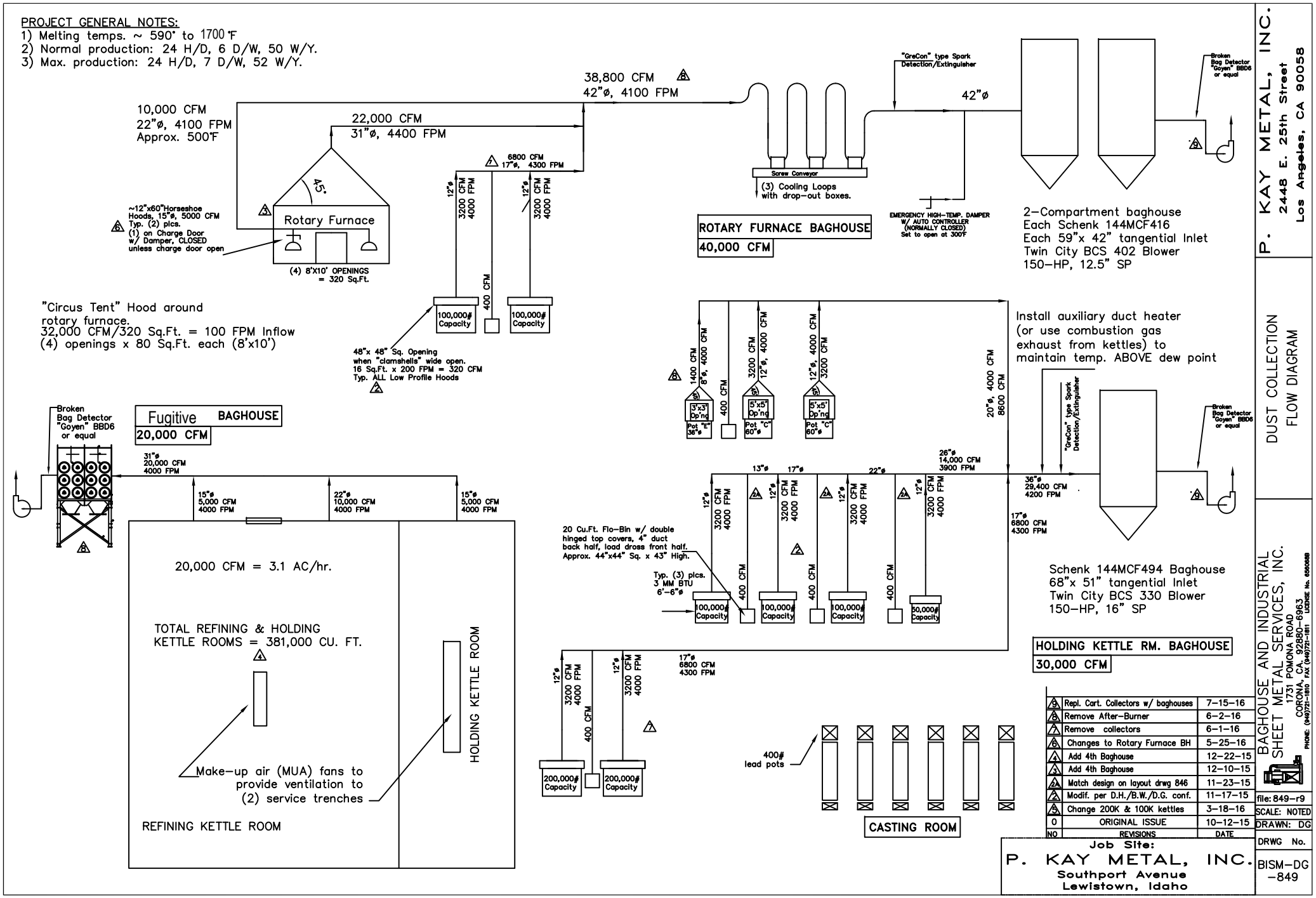
PROJECT GENERAL NOTES:
1) Melting temps. ~ 590° to 1700°F
2) Normal production: 24 H/D, 6 D/W, 50 W/Y.
3) Max. production: 24 H/D, 7 D/W, 52 W/Y.
10,000 CFM
22"ø, 4100 FPM
Approx. 500°F
22,000 CFM
31"ø, 4400 FPM
38,800 CFM
42"ø, 4100 FPM
6800 CFM
17"ø, 4300 FPM
~12"x60" Horseshoe Hoods, 15"ø, 5000 CFM Typ. (2) pics. (1) on Charge Door w/ Damper, CLOSED unless charge door open
Rotary Furnace
45°
(4) 8'X10' OPENINGS = 320 Sq.Ft.
12"ø 3200 CFM 4000 FPM
400 CFM
100,000# Capacity
"Circus Tent" Hood around rotary furnace.
32,000 CFM/320 Sq.Ft. = 100 FPM Inflow
(4) openings x 80 Sq.Ft. each (8'x10')
48"x 48" Sq. Opening when "clamshells" wide open.
16 Sq.Ft. x 200 FPM = 320 CFM
Typ. ALL Low Profile Hoods
"GreCon" type Spark Detection/Extinguisher
42"ø
Screw Conveyor
(3) Cooling Loops with drop-out boxes.
EMERGENCY HIGH-TEMP. DAMPER W/ AUTO CONTROLLER (NORMALLY CLOSED) Set to open at 300°F
ROTARY FURNACE BAGHOUSE
40,000 CFM
2-Compartment baghouse
Each Schenk 144MCF416
Each 59"x 42" tangential Inlet
Twin City BCS 402 Blower
150-HP, 12.5" SP
Broken Bag Detector "Goyen" BBD6 or equal
Install auxiliary duct heater (or use combustion gas exhaust from kettles) to maintain temp. ABOVE dew point
1400 CFM 8"ø, 4000 CFM
3200 CFM 12"ø, 4000 CFM
12"ø, 4000 CFM 3200 CFM
3'x3' Op'ng Pot "E" 36"ø
5'x5' Op'ng Pot "C" 60"ø
20"ø, 4000 CFM 8600 CFM
26"ø 14,000 CFM 3900 FPM
13"ø 17"ø 22"ø
36"ø 29,400 CFM 4200 FPM
17"ø 6800 CFM 4300 FPM
20 Cu.Ft. Flo-Bin w/ double hinged top covers, 4" duct back half, load dross front half. Approx. 44"x44" Sq. x 43" High.
Typ. (3) pics. 3 MM BTU 6'-6"ø
100,000# Capacity
50,000# Capacity
Schenk 144MCF494 Baghouse
68"x 51" tangential Inlet
Twin City BCS 330 Blower
150-HP, 16" SP
HOLDING KETTLE RM. BAGHOUSE
30,000 CFM
Fugitive BAGHOUSE
20,000 CFM
31"ø 20,000 CFM 4000 FPM
15"ø 5,000 CFM 4000 FPM
22"ø 10,000 CFM 4000 FPM
20,000 CFM = 3.1 AC/hr.
TOTAL REFINING & HOLDING KETTLE ROOMS = 381,000 CU. FT.
Make-up air (MUA) fans to provide ventilation to (2) service trenches
HOLDING KETTLE ROOM
REFINING KETTLE ROOM
200,000# Capacity
400# lead pots
CASTING ROOM
P. KAY METAL, INC.
2448 E. 25th Street
Los Angeles, CA 90058
DUST COLLECTION FLOW DIAGRAM
BAGHOUSE AND INDUSTRIAL SHEET METAL SERVICES, INC.
1731 POMONA ROAD
CORONA, CA. 92880-6963
PHONE: (949)721-1810 FAX (949)721-1811 LICENSE No. 650088
Repl. Cart. Collectors w/ baghouses 7-15-16
Remove After-Burner 6-2-16
Remove collectors 6-1-16
Changes to Rotary Furnace BH 5-25-16
Add 4th Baghouse 12-22-15
Add 4th Baghouse 12-10-15
Match design on layout drwg 846 11-23-15
Modif. per D.H./B.W./D.G. conf. 11-17-15
Change 200K & 100K kettles 3-18-16
0 ORIGINAL ISSUE 10-12-15
NO REVISIONS DATE
file: 849-r9
SCALE: NOTED
DRAWN: DG
DRWG No.
BISM-DG -849
Job Site:
P. KAY METAL, INC.
Southport Avenue
Lewistown, Idaho

Attachment #2

Equipment List

Emissions Calculations

Max Operating Time 8760 hrs/yr

Criteria Pollutant Emissions

	PTE Uncontrolled						BRC[1]		
Pollutants	**Rotary Furnace Baghouse (lbs/hr)**	**Holding Kettle Baghouse (lbs/hr)**	**Fugitive Baghouse (lbs/hr)**	**Extruders (lbs/hr)**	**Total (lb/hr)**	**Total (tpy)**	**(tpy)**	**Exceed BRC?**	**Rotary Furnace Baghouse (lbs/hr)**
PM	0.51	1.1	0.09	0.04515	1.78	7.79	1	Yes	5.1E-03
SO2	0.01	0.01	--	--	0.02	0.08	4	No	5.9E-03
NO_X	0.98	2.0	--	--	2.94	12.88	4	Yes	0.98
CO	0.82	1.6	--	--	2.47	10.82	10	Yes	0.82
VOC	0.05	0.11	--	--	0.16	0.71	4	No	0.05
Lead	0.15	0.33	2.8E-02	0.01505	0.51	2.26	0.06	Yes	1.5E-03
CO_2e	1,184	2,367	--	--	3,551	15,553			1,184

Toxic and Hazardous Pollutant Emissions

CAS #	**Pollutant**	**Rotary Furnace Baghouse (lbs/hr)**	**Holding Kettle Baghouse (lbs/hr)**	**Fugitive Baghouse (lbs/hr)**	**Extruders (lbs/hr)**	**Emission Rate (lb/hr)**	**BRC[5]**	**Exceed BRC?**	**Screening Emission Level (lb/hr)**	**Exceeds Screening Level? (Y/N)[6]**
56-49-5	3-Methylchloranthrene	1.8E-08	3.5E-08	--	--	5.3E-08	2.5E-07	No	2.50E-06	No
	7-PAH group[4]	1.1E-07	2.2E-07	--	--	3.4E-07	2.0E-07	Yes	2.00E-06	No
7429-90-5	Aluminum	1.1E-05	2.4E-05	--	--	3.5E-05	6.7E-02	No	0.667	No
7440-36-0	Antimony	1.7E-05	7.8E-06	--	--	2.5E-05	3.3E-03	No	3.30E-02	No
7440-38-2	Arsenic	4.0E-06	3.6E-06	--	--	7.5E-06	1.5E-07	Yes	1.50E-06	Yes
7440-39-3	Barium	1.1E-05	1.3E-05	--	--	2.4E-05	3.3E-03	No	3.30E-02	No
7726-95-6	Bromine	3.3E-04	3.1E-04			6.5E-04	4.7E-03	No	4.70E-02	No
71-43-2	Benzene	2.1E-05	4.1E-05	--	--	6.2E-05	8.0E-05	No	8.00E-04	No
7440-41-7	Beryllium	1.2E-09	2.4E-09	--	--	3.5E-09	2.8E-06	No	2.80E-05	No
7440-439	Cadmium	5.1E-06	6.1E-07	--	--	5.7E-06	3.7E-07	Yes	3.70E-06	Yes
7782-50-5	Chlorine	2.3E-03	3.6E-03	--	--	5.9E-03	2.0E-02	No	2.00E-01	No
7440-47-3	Chromium	1.3E-06	9.6E-07	--	--	2.2E-06	3.3E-03	No	3.30E-02	No
7440-48-4	Cobalt	2.3E-08	1.6E-08	--	--	4.0E-08	3.3E-04	No	3.30E-03	No
7440-50-8	Copper	2.8E-06	2.1E-06	--	--	4.9E-06	6.7E-03	No	6.70E-02	No
50-00-0	Formaldehyde	7.4E-04	1.5E-03	--	--	2.2E-03	5.1E-05	Yes	5.10E-04	Yes
110-54-3	Hexane	1.8E-02	3.5E-02	--	--	5.3E-02	1.2E+00	No	1.20E+01	No
7439-96-5	Manganese	3.6E-07	2.7E-07	--	--	6.3E-07	3.3E-03	No	3.30E-02	No
7439-98-7	Molybdenum	1.1E-07	2.2E-07	--	--	3.2E-07	3.3E-02	No	3.33E-01	No
91-20-3	Naphthalene	6.0E-06	1.2E-05	--	--	1.8E-05	3.3E-01	No	3.33E+00	No
7440-02-0	Nickel	1.1E-06	2.3E-06	--	--	3.3E-06	2.7E-06	Yes	2.70E-05	No
10024-97-2	Nitrous Oxide	2.2E-02	4.3E-02	--	--	6.5E-02	6.0E-01	No	6.00E+00	No
109-66-0	Pentane	2.5E-02	5.1E-02	--	--	7.6E-02	1.2E+01	No	1.18E+02	No
7723-14-0	Phosphorus	5.1E-06	9.5E-06	--	--	1.5E-05	7.0E-04	No	0.007	No
7782-49-2	Selenium	4.1E-07	1.0E-07	--	--	5.2E-07	1.3E-03	No	1.30E-02	No
7440-21-3	Silicon	1.1E-05	2.3E-05	--	--	3.4E-05	6.7E-02	No	0.667	No
7440-31-5	Tin	3.1E-06	7.2E-06	--	--	1.0E-05	1.3E-02	No	0.133	No
108-88-3	Toluene	3.3E-05	6.7E-05	--	--	1.0E-04	2.5E+00	No	2.50E+01	No
7440-66-6	Zinc	5.4E-06	9.0E-06	--	--	1.4E-05	6.7E-02	No	6.67E-01	No

			Controlled Emissions[2]			Modeling Threshold[3]			
Holding Kettle Baghouse (lbs/hr)	Fugitive Baghouse (lbs/hr)	Extruders (lbs/hr)	(lb/hr)	(tpy)	(lb/month)	(lb/hr)	(tpy)	(lb/month)	Threshold Exceeded?[6]
1.1E-02	9.4E-04	4.5E-02	0.06	0.27			0.35		No
1.2E-02	--	--	0.02	0.08			1.2		No
2.0	--	--	2.94	12.88			1.2		Yes
1.6	--	--	2.47	10.82		15			No
0.11	--	--	0.16	0.71		--	--	--	--
3.3E-03	2.8E-04	1.5E-02	0.02	0.09	14.64			14	Yes
2,367	--	--	3,551	15,553					--

Notes

1) Idaho DEQ *Guideline for Performing Air Quality Impact Analysis* Section 3.2, over 10% of Below Regulatory Concern Limit is significant per IDAPA 58.01.01.223

2) PM and Lead contolled through baghouses

3) Idaho DEQ Guideline for Preforming Air Quality Impact Analysis Table 2

4) IDAPA 58.01.01 Section 586, 7-PAH group consisting of benzo(a)anthracene, benzo(b)fluoranthene, benzo(k)fluoranthene, dibenzo(a,h)anthracne, chrysene, indenol(1,2,3,-cd)pyrene, and benzo(a)pyrene.

5) IDAPA 58.01.01 Section 223.01

6) If levels are exceeded, then modeling is required.

P. Kay Metal, Lewiston
Equipment List / Input Parameters

Operating Equipment

Equipment Number	Equipment Type[1]	Emissions Control Equipment[2]	Capacity (lbs)[1]	Throughput (lbs/hr)[1,3]	Burner Type	Burner Rate (mm But/hr)[1]
Kettle 1	Tilting Rotary Furnace	Rotary Furnace Baghouse	53,000	5,000	Natural Gas	4
Kettle 2	Refining Kettle	Rotary Furnace Baghouse	100,000	12,000	Natural Gas	3
Kettle 3	Refining Kettle	Rotary Furnace Baghouse	100,000	12,000	Natural Gas	3
Kettle 4	Alloying Kettle	Holding Kettle Baghouse	200,000	20,000	Natural Gas	4
Kettle 5	Alloying Kettle	Holding Kettle Baghouse	200,000	20,000	Natural Gas	4
Kettle 6	Holding Kettle	Holding Kettle Baghouse	100,000	3,200	Natural Gas	3
Kettle 7	Holding Kettle	Holding Kettle Baghouse	100,000	6,000	Natural Gas	3
Kettle 8	Holding Kettle	Holding Kettle Baghouse	100,000	7,500	Natural Gas	3
Kettle 9	Holding Kettle	Holding Kettle Baghouse	50,000	7,500	Natural Gas	1.5
Kettle 10	Holding Kettle	Holding Kettle Baghouse	12,000	500	Natural Gas	0.5
Kettle 11	Holding Kettle	Holding Kettle Baghouse	12,000	500	Natural Gas	0.5
Kettle 12	Holding Kettle	Holding Kettle Baghouse	2,000	100	Natural Gas	0.5
Ext 1-Ext 6	Extruder	NA	400	5,017	NA	NA

Operating Characteristics

Maximum Operating Time	Maximum Throughput (tons/yr)
8760	131,838

Emissions Control Equipment

Baghouses	Manufacturer[4]	Model Number[4]	Bag type[4]	Broken Bag Detector? (Y/N)[4]	Filter Area (ft^2)[4]	AC Ratio[4]	Control Efficiency[5]	Stack height (ft)[6]	Stack diameter (in)[6]	Stack exit temp (ºF)[4]	Stack Flowrate (cfm)[4]
Rotary Furnace Baghouse	CAMCORP	70TR10x1050	Nomex Filter Bags	Yes	16,800	2.98:1	99%	25	38	300	50,000
Holding Kettle Room Baghouse	CAMCORP	42TR10x630	Polyester Filter Bags	Yes	10,080	2.98:1	99%	6	30	77	30,000
Fugitive Baghouse	CAMCORP	CA30	Synthetic Blend Cartridge	Yes	9,750	2.57:1	99%	6	30	77	25,000

Blowers	Manufacturer	Model Number[7]	Power (hP)[7]
Rotary Furnace Blower	Industrial Blower	BISW 445	150
Holding Kettle Blower	Industrial Blower	BISW 330	125
Fugitive Blower	Industrial Blower	BISW 300	125

Notes

1) Burners for kettles spreadsheet, from client (June 18, 2016)
2) Facility Layout, from client (July 7, 2016)
3) Assuming maximum process throughput processed through extruders
4) CAMCORP Bahouse Quote (August 31, 2016) Attachment 9-31
5) CAMCORP Letter (September 26, 2016) Attachment 9-41
6) Rotary Furnace Baghouse specs from client, Holding Kettle Room and Fugitive Baghouse specs estimated by SEI
7) Industrial Air Technology Corp Blower Quote (August 31, 2016) Attachment 9-29

Max Operating Time	8760	hrs/yr
Max Burner Value[1]	4	MMBtu/hr
Max Throughput[1]	5,000	lb/hr
GWP_{CH4}[2]	25	
GWP_{N2O}[2]	298	

Baghouse	Control Efficiency	Flow Rate from Rotary Furnace[3]
Rotary Furnace	99.00%	22,000
Fugitive	99.00%	6,500

Criteria Pollutants and Greenhouse Gases

Pollutant	Emission Factor ($lb/10^6$ scf)[4]	Emission Factor (lb/MMBtu)[5]	Kettle 1 (lb/hr)
Burner Emissions[6]			
PM[7]	7.6	7.5E-03	0.03
SO_2	0.6	5.9E-04	2.4E-03
NO_X	100	9.8E-02	0.39
CO	84	8.2E-02	0.33
VOC	5.5	5.4E-03	0.02
Lead	5.0E-04	4.9E-07	2.0E-06
CO_2	120,000	118	471
Methane	2.3	2.3E-03	9.0E-03
Process Emissions[8]			
PM[7,9]	0.03		0.08
Lead[10]	0.01		2.5E-02
CO_2[11]	8.8E-05		0.4

Total Critical Pollutants and Greenhouse Gases

Pollutant	Emission Rate (lbs/hr)	Emission Rate (tpy)
Controlled		
PM	1.0E-03	4.6E-03
SO_2	2.4E-03	1.0E-02
NO_X	0.39	1.7
CO	0.33	1.4
VOC	0.02	9.4E-02
Lead	2.5E-04	1.1E-03
CO_2e[12]	473.83	2,075

Toxic and Hazardous Pollutants

CAS #	Burner Emissions	Emission Factor ($lb/10^6$ scf)[13]	Emisison Factor (lb/MMBtu)	Volatile? (Yes/No)	Emisison Rate (lb/hr)
56-49-5	3-Methylchloranthrene	1.8E-06	1.8E-09	Yes	7.1E-09
NA	7-PAH group[14]	1.1E-05	1.1E-08	Yes	4.5E-08
7440-38-2	Arsenic	2.0E-04	2.0E-07	No	7.8E-09
7440-39-3	Barium	4.4E-03	4.3E-06	No	1.7E-07
56-55-3	Benz(a)anthracene	1.8E-06	1.8E-09	Yes	7.1E-09
71-43-2	Benzene	2.1E-03	2.1E-06	Yes	8.2E-06
50-32-8	Benzo(a)pyrene	1.2E-06	1.2E-09	Yes	4.7E-09
205-99-2	Benzo(b)fluoranthene	1.8E-06	1.8E-09	Yes	7.1E-09
207-08-9	Benzo(k)fluoranthene	1.8E-06	1.8E-09	Yes	7.1E-09
7440-41-7	Beryllium	1.2E-05	1.2E-08	No	4.7E-10
7440-43-9	Cadmium	1.1E-03	1.1E-06	No	4.3E-08
7440-47-3	Chromium	1.4E-03	1.4E-06	No	5.5E-08
218-01-9	Chrysene	1.8E-06	1.8E-09	Yes	7.1E-09
7440-48-4	Cobalt	8.4E-05	8.2E-08	No	3.3E-09
7440-50-8	Copper	8.5E-04	8.3E-07	No	3.3E-08
53-70-3	Dibenzo(a,h)anthracene	1.2E-06	1.2E-09	Yes	4.7E-09
50-00-0	Formaldehyde	7.5E-02	7.4E-05	Yes	2.9E-04
110-54-3	Hexane	1.8E+00	1.8E-03	Yes	7.1E-03
193-39-5	Indeno(1,2,3-cd)pyrene	1.8E-06	1.8E-09	Yes	7.1E-09
7439-96-5	Manganese	3.8E-04	3.7E-07	No	1.5E-08
7439-98-7	Molybdenum	1.1E-03	1.1E-06	No	4.3E-08
91-20-3	Naphthalene	6.1E-04	6.0E-07	Yes	2.4E-06
7440-02-0	Nickel	2.1E-03	2.1E-06	No	8.2E-08
10024-97-2	Nitrous Oxide	2.2E+00	2.2E-03	Yes	8.6E-03
109-66-0	Pentane	2.6E+00	2.5E-03	Yes	1.0E-02
7782-49-2	Selenium	2.4E-05	2.4E-08	No	9.4E-10
108-88-3	Toluene	3.4E-03	3.3E-06	Yes	1.3E-05
7440-66-6	Zinc	2.9E-02	2.8E-05	No	1.1E-06

CAS #	Process Emissions	Weight (%)[15]	Volatile? (Yes/No)	Emission Rate (lb/hr)
7429-90-5	Aluminum	0.323	No	2.4E-06
7440-36-0	Antimony	1.893	No	1.4E-05
7440-38-2	Arsenic	0.355	No	2.7E-06
7440-39-3	Barium	0.807	No	6.1E-06
7726-95-6	Bromine	0.29	Yes	2.2E-04
7440-439	Cadmium	0.645	No	4.8E-06
7782-50-5	Chlorine	1.312	Yes	9.8E-04
7440-47-3	Chromium	0.118	No	8.9E-07
7440-48-4	Cobalt	0.002	No	1.5E-08
7440-50-8	Copper	0.269	No	2.0E-06
7439-96-5	Manganese	0.033	No	2.5E-07
7440-02-0	Nickel	0.022	No	1.7E-07
7723-14-0	Phosphorus	0.215	No	1.6E-06
7782-49-2	Selenium	0.05	No	3.8E-07
7440-21-3	Silicon	0.398	No	3.0E-06
7440-31-5	Tin	0.065	No	4.9E-07
7440-66-6	Zinc	0.172	No	1.3E-06

Notes

1) Burners for kettles spreadsheet from client (June 18, 2016)
2) 40 CFR Part 98 Table A-1 (August 2016)
3) Facility Layout, from client (July 7, 2016)
4) AP-42 Chapter 1.4 Table 1&2, assuming natural gas used for combustion (July 1998)
5) Natural gas energy value of 1020 mmBTU/scf per AP-42 Section 1.4 Table 2, footnote a (July 1998)
6) Emissions based on maximum burner value for rotary furnace
7) $PM=PM_{10}=PM_{2.5}$
8) Emissions based on maximum capacity for rotary furnace
9) AP-42 Chapter 12.11 Table 2, kettle refining produces 0.03 lb particulate per ton metal produced (Oct 1986)
10) AP-42 Chapter 12.11 Table 2, kettle refining produces 0.01 lb lead per ton metal produced (Oct 1986)
11) Carbon from residual organic on recycled metal. Recycled metal estimated to be 10% of max throughput (SG=11.34). Residual organic assumed to be less than 1% of recycled metal (SG 1.0) [lb/lb]
12) $CO_2e=CO_2$ + Methane*Global warming potential (GWP) Methane + Nitrous Oxide*GWP Nitrous Oxide
13) AP-42 Chapter 1.4 Table 3 and 4, assuming natural gas used for combustion (July 1998)
14) IDAPA 58.01.01 Section 586, 7-PAH group consisting of benzo(a)anthracene, benzo(b)fluoranthene, benzo(k)fluoranthene, dibenzo(a,h)anthracne, chrysene, indenol(1,2,3,-cd)pyrene, and benzo(a)pyrene.
15) "Speciate" 3.2, Profile 2040310 for Reverberatory Furnace (January 5, 1989)

Max Operating Time	8760	hrs/yr
GWP_{CH4}[1]	25	
GWP_{N2O}[1]	298	

Kettle Number	Kettle 2	Kettle 3
Max Burner Value (MMBtu/hr)[2]	3	3
Max Throughput (lbs/hr)[2]	12,000	12,000

Baghouse	Control Efficiency	Flow Rate from Refining Kettles[3]
Rotary Furnace	99.00%	38,800
Fugitive	99.00%	8,500

Criteria Pollutants and Greenhouse Gases

Pollutant	Emission Factor (lb/10^6 scf)[4]	Emission Factor (lb/MMBtu)[5]	Kettle 2 (lbs/hr)	Kettle 3 (lbs/hr)	Total (lbs/hr)
Burner Emissions[6]					
PM[7]	7.6	7.5E-03	2.2E-02	2.2E-02	4.5E-02
SO2	0.6	5.9E-04	1.8E-03	1.8E-03	3.5E-03
NO_X	100	9.8E-02	0.294	0.294	0.588
CO	84	8.2E-02	0.247	0.247	0.494
VOC	5.5	5.4E-03	0.016	0.016	0.032
Lead	5.00E-04	4.9E-07	1.47E-06	1.47E-06	2.94E-06
CO_2	120,000	1.2E+02	3.53E+02	3.53E+02	7.06E+02
Methane	2.3	2.3E-03	6.76E-03	6.76E-03	1.35E-02
Process Emissions[8]					
PM[7,9]	0.03		0.18	0.18	0.36
Lead[10]	0.01		0.06	0.06	0.12

Total Criteria Pollutants

Pollutant	Emission Rate (lbs/hr)	Emission Rate (tpy)
Controlled		
PM	4.0E-03	1.8E-02
SO2	3.5E-03	1.5E-02
NO_X	0.59	2.6
CO	0.49	2.2
VOC	0.03	0.1
Lead	1.2E-03	5.3E-03
CO_2e[11]	710	3110

Toxic and Hazardous Pollutants

CAS #	Burner Emissions	Emission Factor (lb/10^scf)[12]	Emisison Factor (lb/MMBtu)	Volatile? (Yes/No)	Emisison Rate (lb/hr)
56-49-5	3-Methylchloranthrene	1.8E-06	1.8E-09	Yes	1.1E-08
NA	7-PAH group[13]	1.1E-05	1.1E-08	Yes	6.7E-08
7440-38-2	Arsenic	2.0E-04	2.0E-07	No	1.2E-08
7440-39-3	Barium	4.4E-03	4.3E-06	No	2.6E-07
56-55-3	Benz(a)anthracene	1.8E-06	1.8E-09	Yes	1.1E-08
71-43-2	Benzene	2.1E-03	2.1E-06	Yes	1.2E-05
50-32-8	Benzo(a)pyrene	1.2E-06	1.2E-09	Yes	7.1E-09
205-99-2	Benzo(b)fluoranthene	1.8E-06	1.8E-09	Yes	1.1E-08
207-08-9	Benzo(k)fluoranthene	1.8E-06	1.8E-09	Yes	1.1E-08
7440-41-7	Beryllium	1.2E-05	1.2E-08	No	7.1E-10
7440-43-9	Cadmium	1.1E-03	1.1E-06	No	6.5E-08
7440-47-3	Chromium	1.4E-03	1.4E-06	No	8.2E-08
218-01-9	Chrysene	1.8E-06	1.8E-09	Yes	1.1E-08
7440-48-4	Cobalt	8.4E-05	8.2E-08	No	4.9E-09
7440-50-8	Copper	8.5E-04	8.3E-07	No	5.0E-08
53-70-3	Dibenzo(a,h)anthracene	1.2E-06	1.2E-09	Yes	7.1E-09
50-00-0	Formaldehyde	7.5E-02	7.4E-05	Yes	4.4E-04
110-54-3	Hexane	1.8E+00	1.8E-03	Yes	1.1E-02
193-39-5	Indeno(1,2,3-cd)pyrene	1.8E-06	1.8E-09	Yes	1.1E-08
7439-96-5	Manganese	3.8E-04	3.7E-07	No	2.2E-08
7439-98-7	Molybdenum	1.1E-03	1.1E-06	No	6.5E-08
91-20-3	Naphthalene	6.1E-04	6.0E-07	Yes	3.6E-06
7440-02-0	Nickel	2.1E-03	2.1E-06	No	1.2E-07
10024-97-2	Nitrous Oxide	2.2E+00	2.2E-03	Yes	1.3E-02
109-66-0	Pentane	2.6E+00	2.5E-03	Yes	1.5E-02
7782-49-2	Selenium	2.4E-05	2.4E-08	No	1.4E-09
108-88-3	Toluene	3.4E-03	3.3E-06	Yes	2.0E-05
7440-66-6	Zinc	2.9E-02	2.8E-05	No	1.7E-06

CAS #	Process Emissions	Weight (%)[14]	Volatile? (Yes/No)	Emission Rate (lb/hr)
7429-90-5	Aluminum	0.243	No	8.7E-06
7440-36-0	Antimony	0.08	No	2.9E-06
7440-38-2	Arsenic	0.036	No	1.3E-06
7440-39-3	Barium	0.122	No	4.4E-06
7726-95-6	Bromine	0.032	Yes	1.2E-04
7440-439	Cadmium	0.004	No	1.4E-07
7782-50-5	Chlorine	0.365	Yes	1.3E-03
7440-47-3	Chromium	0.007	No	2.5E-07
7440-50-8	Copper	0.02	No	7.2E-07
7439-96-5	Manganese	0.002	No	7.2E-08
7440-02-0	Nickel	0.019	No	6.8E-07
7723-14-0	Phosphorus	0.097	No	3.5E-06
7782-49-2	Selenium	0.001	No	3.6E-08
7440-21-3	Silicon	0.234	No	8.4E-06
7440-31-5	Tin	0.073	No	2.6E-06
7440-66-6	Zinc	0.034	No	1.2E-06

Notes

1) 40 CFR Part 98 Table A-1 (August 2016)
2) Burners for kettles spreadsheet from client (June 18, 2016)
3) Facility Layout, from client (July 7, 2016)
4) AP-42 Chapter 1.4 Table 1&2, assuming natural gas used for combustion (July 1998)
5) Natural gas energy value of 1020 mmBTU/scf per AP-42 Section 1.4 Table 2, footnote a (July 1998)
6) Emissions based on maximum burner value for refining kettle
7) $PM=PM_{10}=PM_{2.5}$
8) Emissions based on maximum capacity for refining kettle
9) AP-42 Chapter 12.11 Table 2, kettle refining produces 0.03 lb particulate per ton metal produced (Oct 1986)
10) AP-42 Chapter 12.11 Table 2, kettle refining produces 0.01 lb lead per ton metal produced (Oct 1986)
11) $CO_2e=CO_2$ + Methane*Global warming potential (GWP) Methane + Nitrous Oxide*GWP Nitrous Oxide
12) AP-42 Chapter 1.4 Table 3 and 4, assuming natural gas used for combustion (July 1998)
13) IDAPA 58.01.01 Section 586, 7-PAH group consisting of benzo(a)anthracene, benzo(b)fluoranthene, benzo(k)fluoranthene, dibenzo(a,h)anthracne, chrysene, indenol(1,2,3,-cd)pyrene, and benzo(a)pyrene.
14) Speciate 3.2, Profile 2040510 for Melting Pot Stack (January 5, 1989)

Max Operating Time	8760	hrs/yr
GWP_{CH4}[1]	25	
GWP_{N2O}[1]	298	

Kettle Number	Kettle 4	Kettle 5
Max Burner Value (MMBtu/hr)[2]	4	4
Max Throughput (lbs/hr)[2]	20,000	20,000

Baghouse	Control Efficiency	Flow Rate from Holding Kettle[3]
Holding Kettle Room	99.00%	6,800
Fugitive	99.00%	1,100

Criteria Pollutants and Greenhouse Gases

Pollutant	Emission Factor (lb/10^6 scf)[4]	Emission Factor (lb/MMBtu)[5]	Kettle 4 (lbs/hr)	Kettle 5 (lbs/hr)	Total (lbs/hr)
Burner Emissions[6]					
PM[7]	7.6	7.5E-03	0.03	0.03	0.06
SO2	0.6	5.9E-04	2.4E-03	2.4E-03	4.7E-03
NO_X	100	9.8E-02	0.39	0.39	0.78
CO	84	8.2E-02	0.33	0.33	0.66
VOC	5.5	5.4E-03	0.02	0.02	0.043
Lead	5.00E-04	4.9E-07	2.0E-06	2.0E-06	3.92E-06
CO_2	120,000	1.2E+02	4.7E+02	4.7E+02	9.41E+02
Methane	2.3	2.3E-03	9.0E-03	9.0E-03	1.80E-02
Process Emissions[8]					
PM[7,9]	0.03		0.3	0.3	0.6
Lead[10]	0.01		0.1	0.1	0.2

Total Criteria Pollutants

Pollutant	Emission Rate (lbs/hr)	Emission Rate (tpy)
Controlled		
PM	0.01	2.9E-02
SO2	4.7E-03	2.1E-02
NO_X	0.78	3.4
CO	0.66	2.9
VOC	0.04	0.2
Lead	2.0E-03	8.8E-03
CO_2e[11]	946.77	4146.9

Toxic and Hazardous Pollutants

CAS #	Burner Emissions	Emission Factor (lb/10^scf)[12]	Emisison Factor (lb/MMBtu)	Volatile? (Yes/No)	Emisison Rate (lb/hr)
56-49-5	3-Methylchloranthrene	1.8E-06	1.8E-09	Yes	1.4E-08
NA	7-PAH group[13]	1.1E-05	1.1E-08	Yes	8.9E-08
7440-38-2	Arsenic	2.0E-04	2.0E-07	No	1.6E-08
7440-39-3	Barium	4.4E-03	4.3E-06	No	3.5E-07
56-55-3	Benz(a)anthracene	1.8E-06	1.8E-09	Yes	1.4E-08
71-43-2	Benzene	2.1E-03	2.1E-06	Yes	1.6E-05
50-32-8	Benzo(a)pyrene	1.2E-06	1.2E-09	Yes	9.4E-09
205-99-2	Benzo(b)fluoranthene	1.8E-06	1.8E-09	Yes	1.4E-08
207-08-9	Benzo(k)fluoranthene	1.8E-06	1.8E-09	Yes	1.4E-08
7440-41-7	Beryllium	1.2E-05	1.2E-08	No	9.4E-10
7440-43-9	Cadmium	1.1E-03	1.1E-06	No	8.6E-08
7440-47-3	Chromium	1.4E-03	1.4E-06	No	1.1E-07
218-01-9	Chrysene	1.8E-06	1.8E-09	Yes	1.4E-08
7440-48-4	Cobalt	8.4E-05	8.2E-08	No	6.6E-09
7440-50-8	Copper	8.5E-04	8.3E-07	No	6.7E-08
53-70-3	Dibenzo(a,h)anthracene	1.2E-06	1.2E-09	Yes	9.4E-09
50-00-0	Formaldehyde	7.5E-02	7.4E-05	Yes	5.9E-04
110-54-3	Hexane	1.8E+00	1.8E-03	Yes	1.4E-02
193-39-5	Indeno(1,2,3-cd)pyrene	1.8E-06	1.8E-09	Yes	1.4E-08
7439-96-5	Manganese	3.8E-04	3.7E-07	No	3.0E-08
7439-98-7	Molybdenum	1.1E-03	1.1E-06	No	8.6E-08
91-20-3	Naphthalene	6.1E-04	6.0E-07	Yes	4.8E-06
7440-02-0	Nickel	2.1E-03	2.1E-06	No	1.6E-07
10024-97-2	Nitrous Oxide	2.2E+00	2.2E-03	Yes	1.7E-02
109-66-0	Pentane	2.6E+00	2.5E-03	Yes	2.0E-02
7782-49-2	Selenium	2.4E-05	2.4E-08	No	1.9E-09
108-88-3	Toluene	3.4E-03	3.3E-06	Yes	2.7E-05
7440-66-6	Zinc	2.9E-02	2.8E-05	No	2.3E-06

CAS #	Process Emissions	Weight (%)[14]	Volatile? (Yes/No)	Emission Rate (lb/hr)
7429-90-5	Aluminum	0.243	No	1.5E-05
7440-36-0	Antimony	0.08	No	4.8E-06
7440-38-2	Arsenic	0.036	No	2.2E-06
7440-39-3	Barium	0.122	No	7.3E-06
7726-95-6	Bromine	0.032	Yes	1.9E-04
7440-439	Cadmium	0.004	No	2.4E-07
7782-50-5	Chlorine	0.365	Yes	2.2E-03
7440-47-3	Chromium	0.007	No	4.2E-07
7440-50-8	Copper	0.02	No	1.2E-06
7439-96-5	Manganese	0.002	No	1.2E-07
7440-02-0	Nickel	0.019	No	1.1E-06
7723-14-0	Phosphorus	0.097	No	5.8E-06
7782-49-2	Selenium	0.001	No	6.0E-08
7440-21-3	Silicon	0.234	No	1.4E-05
7440-31-5	Tin	0.073	No	4.4E-06
7440-66-6	Zinc	0.034	No	2.0E-06

Notes

1) 40 CFR Part 98 Table A-1 (August 2016)
2) Burners for kettles spreadsheet from client (June 18, 2016)
3) Facility Layout, from client (July 7, 2016)
4) AP-42 Chapter 1.4 Table 1&2, assuming natural gas used for combustion (July 1998)
5) Natural gas energy value of 1020 mmBTU/scf per AP-42 Section 1.4 Table 2, footnote a (July 1998)
6) Emissions based on maximum burner value for refining kettle
7) $PM=PM_{10}=PM_{2.5}$
8) Emissions based on maximum capacity for refining kettle
9) AP-42 Chapter 12.11 Table 2, kettle refining produces 0.03 lb particulate per ton metal produced (Oct 1986)
10) AP-42 Chapter 12.11 Table 2, kettle refining produces 0.01 lb lead per ton metal produced (Oct 1986)
11) $CO_2e=CO_2$ + Methane*Global warming potential (GWP) Methane + Nitrous Oxide*GWP Nitrous Oxide
12) AP-42 Chapter 1.4 Table 3 and 4, assuming natural gas used for combustion (July 1998)
13) IDAPA 58.01.01 Section 586, 7-PAH group consisting of benzo(a)anthracene, benzo(b)fluoranthene, benzo(k)fluoranthene, dibenzo(a,h)anthracne, chrysene, indenol(1,2,3,-cd)pyrene, and benzo(a)pyrene.
14) Speciate 3.2, Profile 2040510 for Melting Pot Stack (January 5, 1989)

Max Operating Time	8760	hrs/yr
GWP_{CH4}[1]	25	
GWP_{N2O}[1]	298	

Kettle Number	Kettle 6	Kettle 7	Kettle 8	Kettle 9	Kettle 10	Kettle 11	Kettle 12
Max Burner Value (MMBtu/hr)[2]	3	3	3	1.5	0.5	0.5	0.5
Max Throughput (lbs/hr)[2]	3,200	6,000	7,500	7,500	500	500	100

Baghouse	Control Efficiency	Flow Rate from Holding Kettles[3]
Holding Kettle Room	99.00%	38,800
Fugitive	99.00%	8,500

Criteria Pollutants and Greenhouse Gases

Pollutant	Emission Factor (lb/10^6 scf)[4]	Emission Factor (lb/MMBtu)[5]	Kettle 6 (lbs/hr)	Kettle 7 (lbs/hr)	Kettle 8 (lbs/hr)	Kettle 9 (lbs/hr)	Kettle 10 (lbs/hr)	Kettle 11 (lbs/hr)	Kettle 12 (lbs/hr)	Total (lbs/hr)
Burner Emissions[8]										
PM[7]	7.6	7.5E-03	2.2E-02	2.2E-02	2.2E-02	1.1E-02	3.7E-03	3.7E-03	3.7E-03	8.9E-02
SO2	0.6	5.9E-04	1.8E-03	1.8E-03	1.8E-03	8.8E-04	2.9E-04	2.9E-04	2.9E-04	7.1E-03
NO_X	100	9.8E-02	2.9E-01	2.9E-01	2.9E-01	1.5E-01	4.9E-02	4.9E-02	4.9E-02	1.2
CO	84	8.2E-02	2.5E-01	2.5E-01	2.5E-01	1.2E-01	4.1E-02	4.1E-02	4.1E-02	0.99
VOC	5.5	5.4E-03	1.6E-02	1.6E-02	1.6E-02	8.1E-03	2.7E-03	2.7E-03	2.7E-03	6.5E-02
Lead	0.0005	4.9E-07	1.5E-06	1.5E-06	1.5E-06	7.4E-07	2.5E-07	2.5E-07	2.5E-07	5.9E-06
CO_2	120000	1.2E+02	3.5E+02	3.5E+02	3.5E+02	1.8E+02	5.9E+01	5.9E+01	5.9E+01	1.4E+03
Methane	2.3	2.3E-03	6.8E-03	6.8E-03	6.8E-03	3.4E-03	1.1E-03	1.1E-03	1.1E-03	2.7E-02
Process Emissions[9]										
PM[7,9]	0.03		4.8E-02	9.0E-02	1.1E-01	1.1E-01	7.5E-03	7.5E-03	1.5E-03	3.8E-01
Lead[10]	0.01		1.6E-02	3.0E-02	3.8E-02	3.8E-02	2.5E-03	2.5E-03	5.0E-04	1.3E-01

Total Criteria Pollutants

Pollutant	Emission Rate (lbs/hr)	Emission Rate (tpy)
Controlled		
PM	4.7E-03	2.1E-02
SO2	7.1E-03	3.1E-02
NO_X	1.2	5.2
CO	1.0	4.3
VOC	0.06	0.3
Lead	1.3E-03	5.5E-03
CO_2e[11]	1420	6220

Toxic and Hazardous Pollutants

CAS #	Burner Emissions	Emission Factor (lb/10^scf)[12]	Factor (lb/MMBtu)	Volatile? (Yes/No)	Emisison Rate (lb/hr)
56-49-5	3-Methylchloranthrene	1.8E-06	1.8E-09	Yes	2.1E-08
NA	7-PAH group[13]	1.1E-05	1.1E-08	Yes	1.3E-07
7440-38-2	Arsenic	2.0E-04	2.0E-07	No	2.4E-08
7440-39-3	Barium	4.4E-03	4.3E-06	No	5.2E-07
56-55-3	Benz(a)anthracene	1.8E-06	1.8E-09	Yes	2.1E-08
71-43-2	Benzene	2.1E-03	2.1E-06	Yes	2.5E-05
50-32-8	Benzo(a)pyrene	1.2E-06	1.2E-09	Yes	1.4E-08
205-99-2	Benzo(b)fluoranthene	1.8E-06	1.8E-09	Yes	2.1E-08
207-08-9	Benzo(k)fluoranthene	1.8E-06	1.8E-09	Yes	2.1E-08
7440-41-7	Beryllium	1.2E-05	1.2E-08	No	1.4E-09
7440-43-9	Cadmium	1.1E-03	1.1E-06	No	1.3E-07
7440-47-3	Chromium	1.4E-03	1.4E-06	No	1.6E-07
218-01-9	Chrysene	1.8E-06	1.8E-09	Yes	2.1E-08
7440-48-4	Cobalt	8.4E-05	8.2E-08	No	9.9E-09
7440-50-8	Copper	8.5E-04	8.3E-07	No	1.0E-07
53-70-3	Dibenzo(a,h)anthracene	1.2E-06	1.2E-09	Yes	1.4E-08
50-00-0	Formaldehyde	7.5E-02	7.4E-05	Yes	8.8E-04
110-54-3	Hexane	1.8E+00	1.8E-03	Yes	2.1E-02
193-39-5	Indeno(1,2,3-cd)pyrene	1.8E-06	1.8E-09	Yes	2.1E-08
7439-96-5	Manganese	3.8E-04	3.7E-07	No	4.5E-08
7439-98-7	Molybdenum	1.1E-03	1.1E-06	No	1.3E-07
91-20-3	Naphthalene	6.1E-04	6.0E-07	Yes	7.2E-06
7440-02-0	Nickel	2.1E-03	2.1E-06	No	2.5E-07
10024-97-2	Nitrous Oxide	2.2E+00	2.2E-03	Yes	2.6E-02
109-66-0	Pentane	2.6E+00	2.5E-03	Yes	3.1E-02
7782-49-2	Selenium	2.4E-05	2.4E-08	No	2.8E-09
108-88-3	Toluene	3.4E-03	3.3E-06	Yes	4.0E-05
7440-66-6	Zinc	2.9E-02	2.8E-05	No	3.4E-06

CAS #	Process Emissions	Weight (%)[14]	Volatile? (Yes/No)	Emission Rate (lb/hr)
7429-90-5	Aluminum	0.243	No	9.2E-06
7440-36-0	Antimony	0.08	No	3.0E-06
7440-38-2	Arsenic	0.036	No	1.4E-06
7440-39-3	Barium	0.122	No	4.6E-06
7726-95-6	Bromine	0.032	Yes	1.2E-04
7440-439	Cadmium	0.004	No	1.5E-07
7782-50-5	Chlorine	0.365	Yes	1.4E-03
7440-47-3	Chromium	0.007	No	2.7E-07
7440-50-8	Copper	0.02	No	7.6E-07
7439-96-5	Manganese	0.002	No	7.6E-08
7440-02-0	Nickel	0.019	No	7.2E-07
7723-14-0	Phosphorus	0.097	No	3.7E-06
7782-49-2	Selenium	0.001	No	3.8E-08
7440-21-3	Silicon	0.234	No	8.9E-06
7440-31-5	Tin	0.073	No	2.8E-06
7440-66-6	Zinc	0.034	No	1.3E-06

Notes

1) 40 CFR Part 98 Table A-1 (August 2016)
2) Burners for kettles spreadsheet from client (June 18, 2016)
3) Facility Layout, from client (July 7, 2016)
4) AP-42 Chapter 1.4 Table 1&2, assuming natural gas used for combustion (July 1998)
5) Natural gas energy value of 1020 mmBTU/scf per AP-42 Section 1.4 Table 2, footnote a (July 1998)
6) Emissions based on maximum burner value for refining kettle
7) $PM=PM_{10}=PM_{2.5}$
8) Emissions based on maximum capacity for refining kettle
9) AP-42 Chapter 12.11 Table 2, kettle refining produces 0.04 lb particulate per ton metal produced (Oct 1986)
10) AP-42 Chapter 12.11 Table 2, kettle refining produces 0.01 lb lead per ton metal produced (Oct 1986)
11) $CO_2e=CO_2$ + Methane*Global warming potential (GWP) Methane + Nitrous Oxide*GWP Nitrous Oxide
12) AP-42 Chapter 1.4 Table 3 and 4, assuming natural gas used for combustion (July 1998)
13) IDAPA 58.01.01 Section 586, 7-PAH group consisting of benzo(a)anthracene, benzo(b)fluoranthene, benzo(k)fluoranthene, dibenzo(a,h)anthracne, chrysene, indenol(1,2,3,-cd)pyrene, and benzo(a)pyrene.
14) Speciate 3.2, Profile 2040510 for Melting Pot Stack (January 5, 1989)

P. Kay Metal, Lewiston
Extruding Unit Emissions

Max Operating Time 8760 hrs/yr

Process Emissions

Pollutant	Emission Factor	Unit 1 (lbs/hr)	Unit 2 (lbs/hr)	Unit 3 (lbs/hr)	Unit 4 (lbs/hr)	Unit 5 (lbs/hr)	Unit 6 (lbs/hr)
Max throughput (lbs/hr)[1]	--	5,017	5,017	5,017	5,017	5,017	5,017
PM[2]	0.003	7.5E-03	7.5E-03	7.5E-03	7.5E-03	7.5E-03	7.5E-03
Lead[2]	0.001	2.5E-03	2.5E-03	2.5E-03	2.5E-03	2.5E-03	2.5E-03

Emissions Totals	(lb/hr)	(tpy)
PM	0.05	0.2
Lead	0.02	0.07

Notes

1) From Client Burners for kettles spreadsheet (June 18, 2016)
2) Sources are insignificant. 10% of the kettle refining emissions factor was used to be conservative. Source: AP-42 Chapter 12.17 Background Document Section 2.3, List of Insignificant Title V Activities, Section B

P. Kay Metal, Lewiston
Fugitive Emissions

Max Operating Time	8760	hrs/yr
Baghouse control efficiency	99%	

Process Emissions		Refining Kettles			Alloying Kettles		Holding Kettles for Casting					
Pollutant	Emission Factor	Kettle 1 (lb/hr)	Kettle 2 (lb/hr)	Kettle 3 (lb/hr)	Kettle 4 (lb/hr)	Kettle 5 (lb/hr)	Kettle 6 (lb/hr)	Kettle 7 (lb/hr)	Kettle 8 (lb/hr)	Kettle 9 (lb/hr)	Kettle 10 (lb/hr)	Kettle 11 (lb/hr)
Max throughput (lbs/hr)[2]	--	5,000	12,000	12,000	20,000	20,000	3,200	6,000	7,500	7,500	500	500
PM[3]	0.002	5.0E-03	1.2E-02	1.2E-02	2.0E-02	2.0E-02	3.2E-03	6.0E-03	7.5E-03	7.5E-03	5.0E-04	5.0E-04
Lead[4]	0.0006	1.5E-03	3.6E-03	3.6E-03	6.0E-03	6.0E-03	9.6E-04	1.8E-03	2.3E-03	2.3E-03	1.5E-04	1.5E-04

Emissions Totals	(lb/hr)	(tpy)
Uncontrolled		
PM	0.09	0.41
Lead	0.03	0.12
Controlled		
PM	9.4E-04	4.1E-03
Lead	2.8E-04	1.2E-03

Notes

1) AP-42 Section 12.11 Table 5 (August 22, 2016)
2) From Client Burners for kettles spreadsheet (June 18, 2016)
3) AP-42 Chapter 12.11 Table 4, 0.002 lbs fugitive particulate per ton metal processed (August 22, 2016)
4) AP-42 Chapter 12.11 Table 4, 0.0006 lbs fugitive lead per ton metal processed (August 22, 2016)

Attachment #3

Modeling Report

AIR DISPERSION MODELING

P. KAY METAL, LEWISTON
LEWISTON, ID

SEPTEMBER 2016

Prepared for:	P. Kay Metal, Inc. Attn: Daniel Hall 154 Southport Ave. Lewiston, ID 83501 (323) 585-5058
Prepared by:	Spring Environmental, Inc. 1011 N. Cedar Street Spokane, Washington 99201-1914 (509) 328-7500
Issue date:	September 28, 2016

Beth Fifield Hodgson
Beth Fifield Hodgson
Principal Engineer

AIR DISPERSION MODELING

P. KAY METAL, LEWISTON

TABLE OF CONTENTS

1. Summary 1

2. Project Description and Background as it Relates to Modeling Analyses 1

3. Modeling Analyses Applicability and Protocol 3

4. Modeled Emissions Sources 7

5. Modeling Methodology 12

6. Results and Discussion 18

7. Quality Assurance/Control 22

Appendices:

A – AERMOD Input and Results Summary
B – Modeling Protocol and DEQ's Conditional Protocol Approval Notice

Included in Application:

- Emission Calculations – See attachment #2
- Scaled Facility Plot Plan – See attachment #4
- AERMET Input and Results Summary – included in electronic form
- AERMOD detailed Reports – included in electronic form

AIR DISPERSION MODELING

P. KAY METAL, LEWISTON

1.0 Summary

This air impact modeling analysis was conducted to determine the impact of criteria and toxic pollutant emissions due to operations at P. Kay Metal, Lewiston's (PKM) manufacturing plant in Lewiston, Idaho. Emissions calculations were performed and compared to emissions levels stipulated in IDAPA 58.01.01. NO_2, arsenic, cadmium, and formaldehyde required modeling. All other criteria and toxic air pollutants have an estimated potential to emit below their respective modeling thresholds.

The sources consist of three baghouses each with a single stack, located on the southwest side of the building. Building downwash is included for the PKM building and an extensive receptor grid using terrain data is used.

The results from this modeling show that modeled criteria pollutant impact concentrations are below the corresponding national ambient air quality standards (NAAQS). All modeled toxic pollutant impacts are also below the acceptable ambient concentration for a carcinogen (AACC). The results from this modeling project are detailed in section 6 of this report.

2.0 Project Description and Background as it Relates to Modeling Analyses

PKM is headquartered in Los Angeles, California and will be establishing a manufacturing facility located at 152 Southport Avenue in Lewiston, Idaho. PKM manufactures and supplies a variety of products including solder, flux, and other metal containing products used in many different industries. Raw materials include metal, recyclable lead containing material, and small quantities of organic and inorganic chemicals for purification (aka fluxes).

2.1 General Facility/Project Description

As part of their manufacturing process, PKM operates a rotary furnace and several kettles which are a source of both toxic and criteria air pollutants. The kettles include two refining kettles, two alloying kettles, and seven holding kettles. Six extruding units used to shape the metal after the refining process are another minor source of pollution. Emissions from the kettles are controlled by a combination of three baghouses. PKM is now applying for a pre-construction permit. PKM estimated emissions of arsenic, cadmium, and formaldehyde in excess of the Emissions

Screening Levels[1] (EL) and NO_X in excess of Level I Thresholds[2]. Modeling is required to determine compliance for these four chemicals.

2.2 Location of Project

PKM will be located at 152 Southport Avenue in Lewiston, Idaho. Some of the immediate area is developed including residential, commercial, and industrial uses. The terrain immediately surrounding the source has a gentle elevation drop in all directions except for the east, where the elevation slowly rises. A stream runs to the north, south, and west of the plant. Within a five-kilometer radius of the source, there is a mix of hilly and flat terrain.

The facility is located in an air quality attainment area and the UTM coordinates for the facility are 11U 497513m E and 5134783m N.

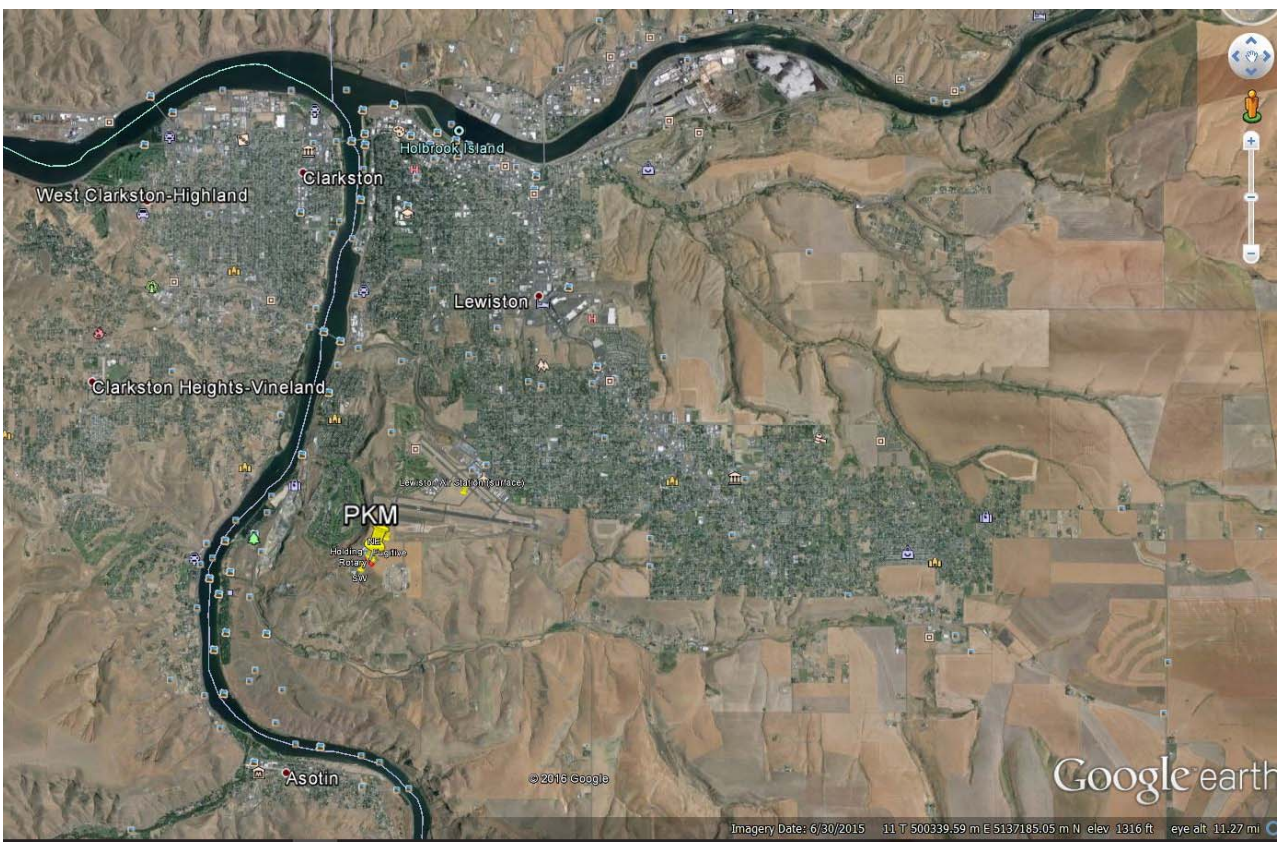

Figure 1: A map of the geographical location of P. Kay Metal, Lewiston

_X_ A map showing the geographical location of the facility is provided in this section or a reference is provided to another location in the application where a map is provided.

[1] Defined in IDAPA 58.01.01.585.
[2] Idaho Department of Environmental Quality; *State of Idaho Guideline for Performing Air Quality Impact Analysis* Table 2, (2013).

2.3 Existing Permits and Modeling Analyses Performed

This facility does not have any existing or previous permits or modeling analyses.

_X_ Any existing air quality permits are listed and described in this section, and any associated air quality modeling analyses have been described and referenced, and submitted if appropriate.

3.0 Modeling Analyses Applicability and Protocol

P. Kay Metal, Lewiston is a proposed facility with the potential to emitting criteria and toxic pollutants in excess of the below regulatory concern (BRC) levels, meaning the facility is required to obtain a permit to construct. NO_X exceeds the Level I Modeling Thresholds defined in Section 3 of the DEQ Modeling Guideline, which indicates modeling is needed. Arsenic, Cadmium, and Formaldehyde emissions are estimated to exceed the screening emissions levels (EL) for toxic pollutants found in IDAPA 58.01.01 section 585-586, therefore modeling is required.

3.1 Applicable Standards

Criteria pollutant NAAQS are listed in Table 1, along with significant impact levels (SILs).

Table 1. APPLICABLE REGULATORY LIMITS

Pollutant	Averaging Period	Significant Impact Levels[a] ($\mu g/m^3$)[b]	Regulatory Limit[c] ($\mu g/m^3$)	Modeled Design Value Used[d]
PM_{10}[e]	24-hour	5.0	150[f]	Maximum 6th highest[g]
$PM_{2.5}$[h]	24-hour	1.2	35[i]	Mean of maximum 8th highest[j]
	Annual	0.3	12[k]	Mean of maximum 1st highest[l]
Carbon monoxide (CO)	1-hour	2,000	40,000[m]	Maximum 2nd highest[n]
	8-hour	500	10,000[m]	Maximum 2nd highest[n]
Sulfur Dioxide (SO_2)	1-hour	3 ppb[o] (7.8 $\mu g/m^3$)	75 ppb[p] (196 $\mu g/m^3$)	Mean of maximum 4th highest[q]
	3-hour	25	1,300[m]	Maximum 2nd highest[n]
	24-hour	5	365[m]	Maximum 2nd highest[n]
	Annual	1.0	80[r]	Maximum 1st highest[n]
Nitrogen Dioxide (NO_2)	1-hour	4 ppb (7.5 $\mu g/m^3$)	100 ppb[s] (188 $\mu g/m^3$)	Mean of maximum 8th highest[t]
	Annual	1.0	100[r]	Maximum 1st highest[n]
Lead (Pb)	3-month[u]	NA	0.15[r]	Maximum 1st highest[n]
	Quarterly	NA	1.5[r]	Maximum 1st highest[n]
Ozone (O_3)	8-hour	40 TPY VOC[v]	75 ppb[w]	Not typically modeled

a. Idaho Air Rules Section 006 (definition for significant contribution) or as incorporated by reference as per Idaho Air Rules Section 107.03.b.
b. Micrograms/cubic meter.
c. Incorporated into Idaho Air Rules by reference, as per Idaho Air Rules Section 107.
d. The maximum 1st highest modeled value is always used for the significant impact analysis unless indicated otherwise. Modeled design values are calculated for each ambient air receptor.
e. Particulate matter with an aerodynamic diameter less than or equal to a nominal 10 micrometers.
f. Not to be exceeded more than once per year on average over 3 years.
g. Concentration at any modeled receptor when using five years of meteorological data.
h. Particulate matter with an aerodynamic diameter less than or equal to a nominal 2.5 micrometers.
i. 3-year mean of the upper 98th percentile of the annual distribution of 24-hour concentrations.
j. 5-year mean of the 8th highest modeled 24-hour concentrations at the modeled receptor for each year of meteorological data modeled. For the SIL analysis, the 5-year mean of the 1st highest modeled 24-hour impacts at the modeled receptor for each year.
k. 3-year mean of annual concentration.
l. 5-year mean of annual averages at the modeled receptor.
m. Not to be exceeded more than once per year.
n. Concentration at any modeled receptor.
o. Interim SIL established by EPA policy memorandum.
p. 3-year mean of the upper 99th percentile of the annual distribution of maximum daily 1-hour concentrations.
q. 5-year mean of the 4th highest daily 1-hour maximum modeled concentrations for each year of meteorological data modeled. For the significant impact analysis, the 5-year mean of 1st highest modeled 1-hour impacts for each year is used.
r. Not to be exceeded in any calendar year.
s. 3-year mean of the upper 98th percentile of the annual distribution of maximum daily 1-hour concentrations.
t. 5-year mean of the 8th highest daily 1-hour maximum modeled concentrations for each year of meteorological data modeled. For the significant impact analysis, the 5-year mean of maximum modeled 1-hour impacts for each year is used.
u. 3-month rolling average.
v. An annual emissions rate of 40 ton/year of VOCs is considered significant for O_3.
w. Annual 4th highest daily maximum 8-hour concentration averaged over three years.

TAP emissions increases resulting from the project are identified below in Table 2.

Table 2. TAP ELS AND AACS/AACCS

TAP	Non-Carcinogen or Carcinogen	Screening Emissions Level (EL)[a] (lb/hr)	AAC (mg/m^3) or AACC[b] (µg/m^3)
3-Methylcholanthrene	Carcinogen	2.5E-06	3.7E-04
7-PAH-group	Carcinogen	2.0E-06	3.0E-04
Aluminum	Non-Carcinogen	0.667	0.5
Antimony	Non-Carcinogen	0.033	0.025
Arsenic	Carcinogen	1.5E-06	2.3E-04
Barium	Non-Carcinogen	0.033	0.025
Benzene	Carcinogen	8.0E-04	1.2E-01
Beryllium	Carcinogen	2.8E-05	4.2E-03
Cadmium	Carcinogen	3.7E-06	5.6E-04
Chlorine	Non-Carcinogen	0.2	0.15
Chromium	Non-Carcinogen	0.033	0.025
Cobalt	Non-Carcinogen	0.0033	0.0025
Copper	Non-Carcinogen	0.067	0.05
Formaldehyde	Carcinogen	5.1E-04	7.7E-02
Hexane	Non-Carcinogen	12	9
Manganese	Non-Carcinogen	0.333	0.25
Molybdenum	Non-Carcinogen	0.333	0.25
Naphthalene	Non-Carcinogen	3.33	2.5
Nickel	Carcinogen	2.7E-05	4.2E-03

TAP	Non-Carcinogen or Carcinogen	Screening Emissions Level (EL)[a] (lb/hr)	AAC (mg/m^3) or AACC[b] ($\mu g/m^3$)
Nitrous Oxide	Non-Carcinogen	6	4.5
Pentane	Non-Carcinogen	118	88.5
Phosphorus	Non-Carcinogen	0.007	0.005
Selenium	Non-Carcinogen	0.013	0.01
Silicon	Non-Carcinogen	0.667	0.5
Tin	Non-Carcinogen	0.133	0.1
Toluene	Non-Carcinogen	25.0	18.75
Zinc	Non-Carcinogen	0.667	0.5

a. ELs from Idaho Air Rules Section 585 and 586 in pounds/hour.

b. Acceptable Ambient Concentration (AAC) or Acceptable Ambient Concentration for a Carcinogen (AACC) from Idaho Air Rules Section 585 and 586, in micrograms/cubic meter or milligrams/cubic meter. Note that AACs listed in Idaho Air Rules Section 585 are expressed in units of milligrams/cubic meter rather than micrograms/cubic meter.

_X_ All TAPs identified in the emissions inventory for the project are listed in the TAPs EL and AAC/AACC Table in this section.

3.2 Criteria Pollutant Modeling Applicability

PKM is estimated to exceed BRC emission levels with particulate matter, NO_X, CO, and lead emissions so a permit to construct is required. NO_X is estimated to exceed Level I Modeling Thresholds, meaning modeling is required. All emissions calculations can be found in Appendix A of the report.

Table 3 lists criteria pollutants for which site-specific modeling analyses were performed to demonstrate compliance with NAAQS.

Table 3. MODELING APPLICABILITY

Criteria Pollutant	Modeled (yes/no)	Basis for Exclusion from Modeling
$PM_{2.5}$ 24-hour	Yes	___BRC Exempt[a] _X_Emissions Below Level I Thresholds[b] ___Emissions Below Level II Thresholds[c]
$PM_{2.5}$ annual	Yes	___BRC Exempt _X_Emissions Below Level I Thresholds ___Emissions Below Level II Thresholds
PM_{10} 24-hour	Yes	___BRC Exempt _X_Emissions Below Level I Thresholds ___Emissions Below Level II Thresholds
NO_2 1-hour		___BRC Exempt ___Emissions Below Level I Thresholds _X_Emissions Below Level II Thresholds
NO_2 annual		___BRC Exempt ___Emissions Below Level I Thresholds _X_Emissions Below Level II Thresholds

Criteria Pollutant	Modeled (yes/no)	Basis for Exclusion from Modeling
SO_2 1-hour, 3-hour	No	_X_BRC Exempt ___Emissions Below Level I Thresholds ___Emissions Below Level II Thresholds
SO_2 annual	No	_X_BRC Exempt ___Emissions Below Level I Thresholds ___Emissions Below Level II Thresholds
CO 1-hour, 8-hour	No	___BRC Exempt _X_Emissions Below Level I Thresholds ___Emissions Below Level II Thresholds

a. If the project would have qualified for a Category I BRC permitting exemption for the criteria pollutant in question, as per Idaho Air Rules Section 221.01, except for the emissions quantities of another criteria pollutant, then a NAAQS compliance analysis is not required under Section 203.02 or 403.02 for that criteria pollutant.

b. Level I Modeling Thresholds from Table 2 in Section 3 of the DEQ Modeling Guideline. NAAQS compliance is assured through DEQ's non-site-specific modeling analyses.

c. Level II Modeling Thresholds from Table 2 in Section 3 of the DEQ Modeling Guideline. NAAQS compliance is assured through DEQ's non-site-specific modeling analyses. Level II Modeling Thresholds can only be used with prior DEQ approval.

_X_ Explanations/documentation why modeling was or was not performed for each criteria pollutant are provided in this section.

_X_ Emissions calculations that clearly show how the modeling applicability determination was performed are provided in this section.

3.3 TAP Modeling Applicability

PKM's emissions calculations estimate there is potential to release arsenic, cadmium, and formaldehyde in excess of their respective emissions screening levels (EL). Because these toxic pollutants have the potential to exceed EL, modeling is required. Calculations for each toxic air pollutant can be found in Appendix A of this report.

_X_ Explanation/documentation on why modeling was or was not performed for emissions of each TAP identified in the emissions inventory of the application are provided in this section.

3.4 Modeling Protocol

A modeling protocol was submitted by Spring Environmental, Inc. on behalf of PKM to DEQ prior to the application, on July 15, 2016. Conditional DEQ protocol approval was provided to Spring Environmental on August 13, 2016. Project-specific modeling and other required impact analyses were generally conducted using data and methods described in the protocol and in the *Idaho Air Quality Modeling Guideline*.

_X_ If a protocol was submitted to DEQ prior to performing the modeling analyses, the protocol and DEQ's conditional protocol approval notice is included in Appendix D of this Modeling Report.

_X_ Concerns identified by DEQ in the protocol approval notice have been addressed in the analyses performed and in this Modeling Report.

4.0 Modeled Emissions Sources

The modeled sources at PKM are four exhaust stacks. Three of the stacks are from baghouses, and the other is from the extruder room. Each stack is modeled individually with the respective Potential to Emit (PTE).

PKM's process begins with metal entering a rotary furnace, or one of two refining kettles. Emissions from these three units are split between the rotary baghouse and the fugitive baghouse. The material then enters one of two alloying kettles and then proceeds to the holding kettles for storage. Emissions from these nine units are split between the holding kettle baghouse and the fugitive baghouse based on flow rates given in the process flow diagram. All of the kettles are housed in a negative pressure room, and any fugitive process emissions are routed to the fugitive baghouse. The metal is moved from the holding kettles to one of the six extruders when ready for manufacturing. The extruders are housed in a second room, and the room emissions are vented through a single stack.

All three baghouses are manufactured by CAMCORP and additional information can be found in the emissions inventory under the equipment list.

_X_ The modeling emissions inventory and the emissions inventory presented in other parts of the permit application are consistent, and if they are not identical numbers, it is clearly shown, with calculations submitted, how the modeled value was derived from the value provided in the emissions inventory.

4.1 Criteria Pollutants

PKM's PTE calculations for all criteria pollutants assume maximum production in which the facility runs 24 hours a day, 365 days per year, with maximum throughput in each operating unit. Only criteria pollutants that exceeded the Level I Modeling Thresholds were modeled.

4.1.1 Modeled Emissions Rates for Significant Impact Level Analyses

All emission rates were calculated based upon a 24 hour per day, 52 weeks per year operating schedule. This schedule is based on PKM's maximum operations. Calculations of modeled emissions are thoroughly documented in the PKM emissions inventory (Appendix A).

Table 4 lists criteria pollutant emissions rates used in the SIL analyses.

Table 4. MODELED EMISSIONS RATES FOR SIL ANALYSES				
Source ID	**Source Description**	**Pollutant**	**Averaging Period**	**Emissions[a] (lb/hr)**
Rotary	Baghouse for rotary furnace and two refining kettles.	$PM_{2.5}$	24-hour	NA
			Annual	NA
		PM_{10}	24-hour	NA
		NOx	1-hour	0.124
			Annual	0.124
		SO_2	1-hour	NA
		CO	1-hour	NA
			8-hour	NA
Holding	Baghouse for two alloying kettles and seven holding kettles.	$PM_{2.5}$	24-hour	NA
			Annual	NA
		PM_{10}	24-hour	NA
		NOx	1-hour	0.247
			Annual	0.247
		SO_2	1-hour	NA
		CO	1-hour	NA
			8-hour	NA
Fugitive	Baghouse for emissions from refining and holding kettle rooms.	$PM_{2.5}$	24-hour	NA
			Annual	NA
		PM_{10}	24-hour	NA
		NOx	1-hour	0
			Annual	0
		SO_2	1-hour	NA
		CO	1-hour	NA
			8-hour	NA
Extruders	Point of emission for all six extruders.	$PM_{2.5}$	24-hour	NA
			Annual	NA
		PM_{10}	24-hour	NA
		NOx	1-hour	0
			Annual	0
		SO_2	1-hour	NA
		CO	1-hour	NA
			8-hour	NA

a. Pound/hour emissions rate modeled is the project-specific increase in potential/allowable emissions increase for the averaging period specified for the pollutant.

_X_ Emissions rates in Table 4 are identical to those in the model input files for SIL analyses.

_X_ Calculation of modeled emissions are thoroughly documented in this section, and any unique handling of emissions in the model have been described.

4.1.2 Modeled Emissions Rates for Cumulative Impact Analyses

All emission rates were calculated based upon a 24 hour per day, 52 weeks per year operating schedule. This schedule is based on PKM's maximum potential operations. Calculations of modeled emissions are thoroughly documented in the PKM emissions inventory.

Table 5 lists criteria pollutant emissions rates used in the cumulative NAAQS impact analyses.

Table 5. MODELED EMISSIONS RATES FOR CUMULATIVE NAAQS IMPACT ANALYSES

Source ID	Source Description	Pollutant	Averaging Period	Emissions[a] (lb/hr)
Rotary	Baghouse for rotary furnace and two refining kettles.	$PM_{2.5}$	24-hour	NA
			Annual	NA
		PM_{10}	24-hour	NA
		NOx	1-hour	0.124
			Annual	0.124
		SO_2	1-hour	NA
		CO	1-hour	NA
			8-hour	NA
		Pb	3-month rolling	NA
			quarterly	NA
Holding	Baghouse for two alloying kettles and seven holding kettles.	$PM_{2.5}$	24-hour	NA
			Annual	NA
		PM_{10}	24-hour	NA
		NOx	1-hour	0.247
			Annual	0.247
		SO_2	1-hour	NA
		CO	1-hour	NA
			8-hour	NA
		Pb	3-month rolling	NA
			quarterly	NA
Fugitive	Baghouse for emissions from refining and holding kettle rooms.	$PM_{2.5}$	24-hour	NA
			Annual	NA
		PM_{10}	24-hour	NA
		NOx	1-hour	0
			Annual	0
		SO_2	1-hour	NA
		CO	1-hour	NA
			8-hour	NA
		Pb	3-month rolling	NA
			quarterly	NA

Source ID	Source Description	Pollutant	Averaging Period	Emissions[a] (lb/hr)
Extruders	Point of emission for all six extruders.	$PM_{2.5}$	24-hour	NA
			Annual	NA
		PM_{10}	24-hour	NA
		NOx	1-hour	0
			Annual	0
		SO_2	1-hour	NA
		CO	1-hour	NA
			8-hour	NA
		Pb	3-month rolling	NA
			quarterly	NA

a. Pounds/hour emissions rate modeled is the potential/allowable emissions for the averaging period specified for the pollutant.

_X_ Emissions rates in Table 5 are identical to those in the model input files for the cumulative NAAQS impact analyses.

_X_ Calculation of modeled emissions are thoroughly documented in this section (unless already described in Section 4.1.1), and any unique handling of emissions in the model have been described.

4.1.3 NO_2/NOx Ratio for NOx Chemistry Modeling

The default ARM method was used for NO_2 modeling. Per the EPA AERMOD User's Guide Addendum section 2.6.6, the default ratios under ARM are 0.08 for 1-hr and 0.75 for annual NO_2/NO_x.

4.1.4 Special Methods for Modeling Criterial Pollutant Emissions

No special or unique methods for modeling criteria pollutants were included in this modeling effort.

4.2 Toxic Air Pollutants

Emissions calculations for toxic air pollutants can be found in the PKM emissions inventory which can be found in Appendix A.

Table 6 lists TAP emissions rates that were included in modeling analyses. Modeling was performed for each TAP having total project emissions exceeding the TAP-specific Screening Emissions Level (EL).

TABLE 6. MODELED EMISSIONS RATES FOR TAP ANALYSES				
Source ID	**Source Description**	**TAP**	**Averaging Period**	**Emissions[a] (lb/hr)**
Rotary	Baghouse for rotary furnace and two refining kettles.	Arsenic	24-hour/annual	4.01E-7
		Cadmium	24-hour/annual	5.13E-7
		Formaldehyde	24-hour/annual	9.26E-5
Holding	Baghouse for two alloying kettles and seven holding kettles.	Arsenic	24-hour/annual	3.59E-7
		Cadmium	24-hour/annual	6.12E-8
		Formaldehyde	24-hour/annual	7.50E-5
Fugitive	Baghouse for emissions from refining and holding kettle rooms.	Arsenic	24-hour/annual	0
		Cadmium	24-hour/annual	0
		Formaldehyde	24-hour/annual	0
Extruders	Point of emission for all six extruders.	Arsenic	24-hour/annual	0
		Cadmium	24-hour/annual	0
		Formaldehyde	24-hour/annual	0

a. Pounds/hour emissions rate modeled is the project-specific increase in potential/allowable emissions increase for the averaging period specified for the TAP.

_X_ TAP emissions rates have been listed for each TAP that has project cumulative emissions exceeding the applicable EL.

_X_ Emissions rates in Table 6 are identical to those in the model input file for TAP analyses.

4.3 Emissions Release Parameters

Emissions release parameters are based on process information and manufacturer specifications. Stack height is estimated off of construction plans and is in accordance with the Good Engineering Practice (GEP) guidelines. Stack gas temperature is determined by maximum operating temperatures from the kettles preceding the baghouses. Stack flow rate is calculated using the sum of flow rates from equipment controlled by each baghouse. Stack diameter is based on a combination of vendor data and construction specifications. All four sources are considered point sources since they discharge through stacks. All emissions release parameters references are documented in the emission inventory spreadsheet.

Table 7 lists stack parameters for point sources.

Table 7. POINT SOURCE STACK PARAMETERS								
Release Point	**Description**	**UTM[a] Coordinates**		**Stack Height (m)**	**Stack Gas Flow Temp. (K)[c]**	**Stack Gas Flow Velocity (m/sec)[d]**	**Modeled Stack Diameter (m)**	**Orient. Of Release[e]**
		Easting-X (m)[b]	**Northing-Y (m)**					
Rotary	Baghouse for rotary furnace and two refining kettles.	497527	5134726	7.6	1089	28.7	0.9	Vertical
Holding	Baghouse for two alloying kettles and seven holding kettles.	497475	5134780	7.6	583	21.6	0.9	Vertical
Fugitive	Baghouse for emissions from refining and holding kettle rooms.	497490	5134764	1.8	583	14.4	0.9	Vertical
Extruders	Point of emission for all six extruders.	497490	5134795	1.8	583	0.7	0.9	Vertical

a. Universal Transverse Mercator.
b. Meters.
c. Kelvin.
d. Meters per second.
e. Vertical uninterrupted, rain-capped, or horizontal release.

_X_ Thorough justification/documentation of release parameters for all modeled sources is provided in this section.

_X_ The specific methods used to determine/calculate given release parameters is described in this section.

_X_ The release orientation of all point source stacks (horizontal, rain-capped, or uninterrupted vertical release) has been verified and is documented in this section.

5.0 Modeling Methodology

Table 8 summarizes the key modeling parameters used in the impact analyses.

Table 8. MODELING PARAMETERS		
Parameter	**Description/Values**	**Documentation/Addition Description**
General Facility Location	Lewiston, Idaho	The Lewiston area is in NAAQS attainment.
Model	AERMOD	AERMOD with the PRIME downwash algorithm, version 15181
Meteorological Data	2011 to 2015 surface and upper air data	The meteorological model input files for this project were developed by Spring Environmental. See Section 5.2 of this memorandum for additional details of the meteorological data.
Terrain	Considered	3-dimensional receptor coordinates were obtained from USGS National Elevation Dataset (NED) files and were used to establish elevation of ground level receptors. AERMAP was used to determine each receptor elevation and hill height scale.
Building Downwash	Considered	Plume downwash was considered for the facility's building. Surrounding buildings are outside the immediate vicinity of the sources. BPIP-PRIME was used to evaluate building downwash effects in AERMOD.
NOx Chemistry	OLM/PVMRM/None	The default ARM was used for NO_2 modeling.
Receptor Grid	**NAAQS & TAPs Analysis**	
	Grid 1	10-meter spacing from the ambient air boundary in a 100-meter (easting) by 100-meter (northing) grid centered on the facility.
	Grid 2	50-meter spacing in a 1,000-meter (easting) by 1,000-meter (northing) grid centered on the facility
	Grid 3	100-meter spacing in a 2,000-meter (easting) by 2,000-meter (northing) grid centered on the facility
	Grid 4	250-meter spacing in a 3,000-meter (easting) by 3,000-meter (northing) grid centered on the facility
	Grid 5	750-meter spacing in a 10,000-meter (easting) by 10,000-meter (northing) grid centered on the facility
	Grid 6	1,250-meter spacing in a 30,000-meter (easting) by 30,000-meter (northing) grid centered on the facility
	Grid 7	2,000-meter spacing in a 50,000-meter (easting) by 50,000-meter (northing) grid centered on the facility

Modeling parameters were outlined in the modeling protocol submitted to DEQ prior to this modeling effort, and were conditionally approved by the DEQ in the review of the modeling protocol.

5.1 Model Selection

AERSURFACE v. 13016
AERMINUTE v. 15272
AERMET v. 15181
AERMAP v. 11103
AERMOD v. 15181

_X_ The current versions of all models and associated programs were used in analyses, or alternate versions were specifically approved by DEQ.

_X_ Any non-default model options used were approved by DEQ in advance.

5.2 Meteorological Data

Five-year meteorological data (2011-2015) for Lewiston-Nez Perce County Airport station ID 24149 was used for surface data and Automated Surface Observation Stations (ASOS) hourly wind data. The nearest upper air station is located in Spokane at the Spokane International Airport site ID 04106. Both of these stations are believed to be the best available data for the Lewiston area.

Surface data was obtained through the National Oceanic and Atmospheric Administration (NOAA) at ftp://ftp.ncdc.noaa.gov/pub/data/noaa. ASOS wind data was obtained from NOAA at ftp://ftp.ncdc.noaa.gov/pub/data/asos-onemin/. Upper air data was obtained from NOAA at http://esrl.noaa.gov/raobs/. The use of this meteorological data was conditionally approved by the DEQ in the review of the modeling protocol. The meteorological data files are provided with the application.

ASOS hourly wind data is used in AERMINUTE, which is a preprocessing program for AERMET used to calculate hourly average wind speeds and directions to backfill missing information in surface data files. Surface and upper air data are used in AERMET, which is the meteorological processing program for AERMOD. AERMET reports are provided in Appendix B.

_X_ Meteorological data files are provided with the application.

_X_ If meteorological data used for modeling was not provided by DEQ, then a detailed discussion of the data is provided along with documentation of the processing steps.

5.3 Effects of Terrain

Terrain data was obtained through the United States Geological Survey (USGS) Landfire program. The file contains terrain data between N: 47.125, W: -118.00, S: 45.625, and E: -116.00 and the datum is WGS 84. The data can be found at http://landfire.cr.usgs.gov/Website/distreq/RequestSummary.jsp?ORIG=MRLC&AL=45.6250,47.1250,-116.0000,-118.0000&PL=NED02HZ.

_X_ The datum of terrain data, building corner locations, emissions sources, and the ambient air boundary are specified and are consistent such that the modeled plot plan accurately represents the facility and surroundings.

5.4 Facility Layout

The scaled facility plot plan is included in Appendix E of the report. Figure 2 shows a map of PKM's property with the buildings drawn approximately where they will be constructed. Locations of emissions sources and buildings were estimated based on facility construction plans.

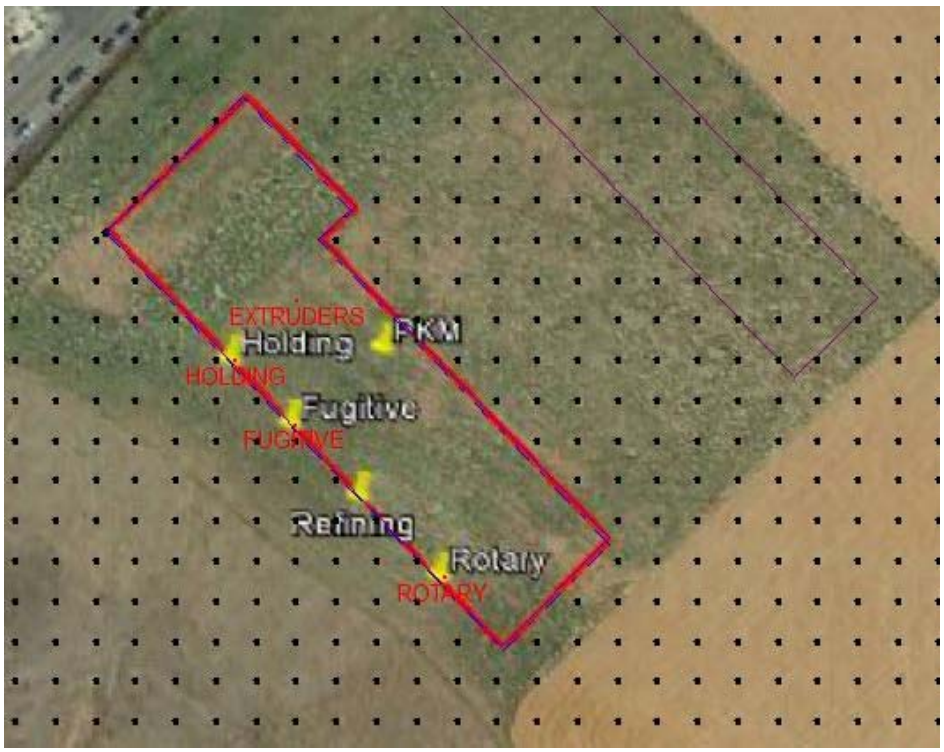

Figure 2: P. Kay Metal, Lewiston site layout

_X_ The facility layout plot plan is provided in this section that clearly and accurately depicts buildings, emissions points, and the ambient air boundary.

_X_ This section of the Modeling Report has thoroughly described how locations of emissions sources, building corners, and the ambient air boundary were determined, specifying the datum used.

5.5 Effects of Building Downwash

Building data was obtained from construction plans for the new facility.

5.6 Ambient Air Boundary

The ambient air boundary used in the model was limited to the manufacturing building on PKM's property. PKM plans to lease the other building on the property and there are presently no plans to install a fence around the property boundary. Although it is unlikely for public to access the property, it is possible which is why the boundary is restricted to the manufacturing building. The general public will not be allowed inside the manufacturing building as part of normal operation.

_X_ If any of the following apply, the effect on areas excluded from ambient air is thoroughly described in this section: a river/stream bisecting the facility; the facility is on leased property or is leasing property to another entity; the facility is not completely fenced; there are right-of-way areas on the facility; the nature of business is such that the general public have access to part or all of the facility.

_X_ This section thoroughly describes how the facility can legally preclude public access (and practically preclude access) to areas excluded from ambient air in the modeling analyses.

5.7 Receptor Network

AERMAP was used to develop a receptor grid of receptors to account for the varied terrain in the surrounding area. The area surrounding the manufacturing building contains a higher density of receptors because that is where the highest concentrations were detected. The receptor grid used in the model is as follows:

- 10-meter spacing from the ambient air boundary out to 100 meters
- 50-meter spacing from 100 meters to 1,000 meters
- 100-meter spacing from 1,000 meters to 2,000 meters
- 250-meter spacing from 2,000 meters to 3,000 meters
- 750-meter spacing from 3,000 meters to 10,000 meters
- 1,250-meter spacing from 10,000 meters to 30,000 meters
- 2,000-meter spacing from 30,000 meters to 50,000 meters

Spring Environmental is confident that the high density of the receptor grid ensures that maximum modeled concentrations of each pollutant were identified, and NAAQS and TAP compliance is assured.

Figures 3 and 4 depict the different tiers of receptor grids that were used.

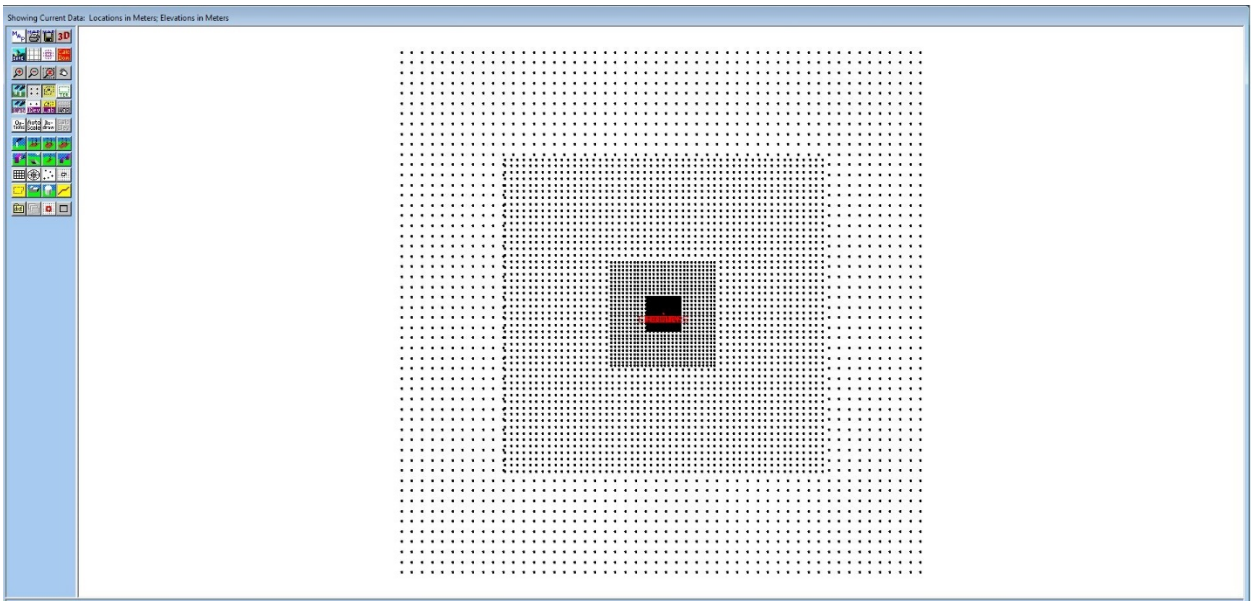

Figure 3: Outermost receptor grid

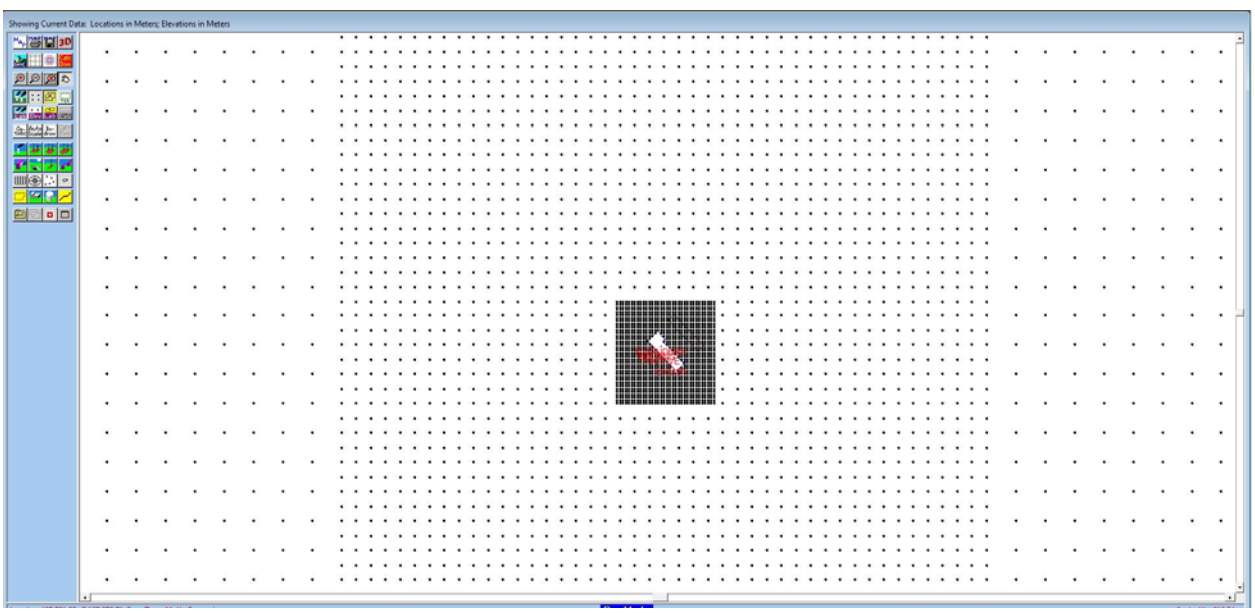

Figure 4: Innermost receptor grid

_X_ This section of the Modeling Report provides justification that receptor spacing used in the air impact analyses was adequate to reasonably resolve the maximum modeled concentrations to the point that NAAQS or TAP compliance is assured.

5.8 Background Concentrations

Background concentrations of NO_2 were found using the North West AIRQUEST tool, at http://lar.wsu.edu/nw-airquest/lookup.html. The one-hour background concentration for NO_2 is

29 ppb and the annual background concentration for NO_2 is 4 ppb. There were no available background concentrations for the toxic pollutants.

_X_ Background concentrations have been thoroughly documented and justified for all criteria pollutants where a cumulative NAAQS impact analysis was performed.

5.9 NOx Chemistry

The default ARM method was used for the NO_2 modeling. According to the EPA, the recommended values for the 1-hr and annual ambient ratios under the ARM option are 0.8 and 0.75 respectively.

The background concentrations for 1-hr NO_2 and annual NO_2 are 55 ug/m^3 and 7.5 ug/m^3 respectively. The background concentrations for ozone are 59 ppb for the daily 8-hr maximum and 55 ppb for the Plume Volume Molar Ratio Method (PVMPM). The North West AIRQUEST tool was used to obtain these background concentrations.

_N/A_ If OLM or PVMRM was used to address NOx chemistry, reasons for selecting one algorithm over the other are provided in this section

6.0 Results and Discussion

AERMOD was run for the criteria pollutant NO_2 and the TAPs Arsenic, Cadmium, and Formaldehyde. All of the modeled pollutants' design concentrations are below the corresponding NAAQS and AACCs, meaning PKM's facility would operate in compliance with IDAPA 58.01.01. The results will be discussed further in the following sections.

6.1 Criteria Pollutant Impact Results

NO_2 was the only criteria pollutant that required modeling. The model results were 54 micrograms per cubic meter (ug/m^3) for the 1-hr averaging period and 3.9 ug/m^3 for the annual averaging period. Adding in the background levels in the area, the total impact for NO_2 1-hr and annual come out to 109 and 11.4 ug/m^3 respectively, both of which are well below the 188 and 100 ug/m^3 NAAQS. Figures 5 and 6 show the 1-hour and annual NO_2 contoured concentrations.

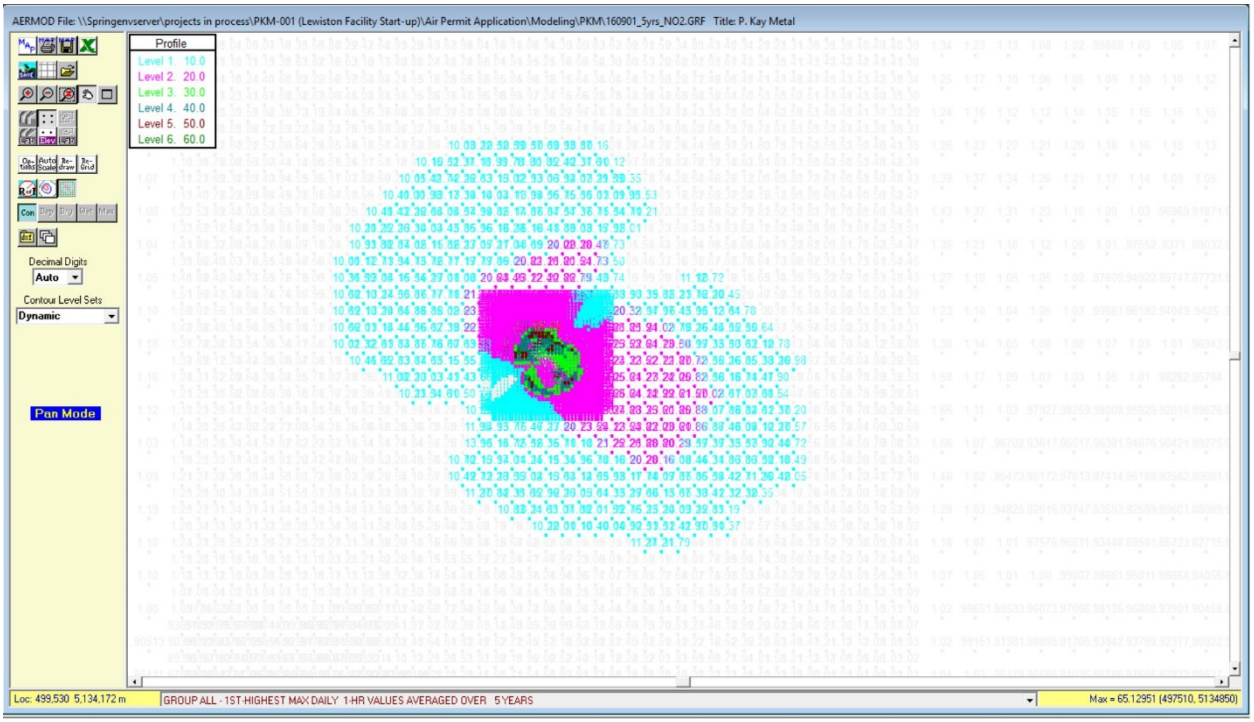

Figure 5: 1-hour NO_2 contour

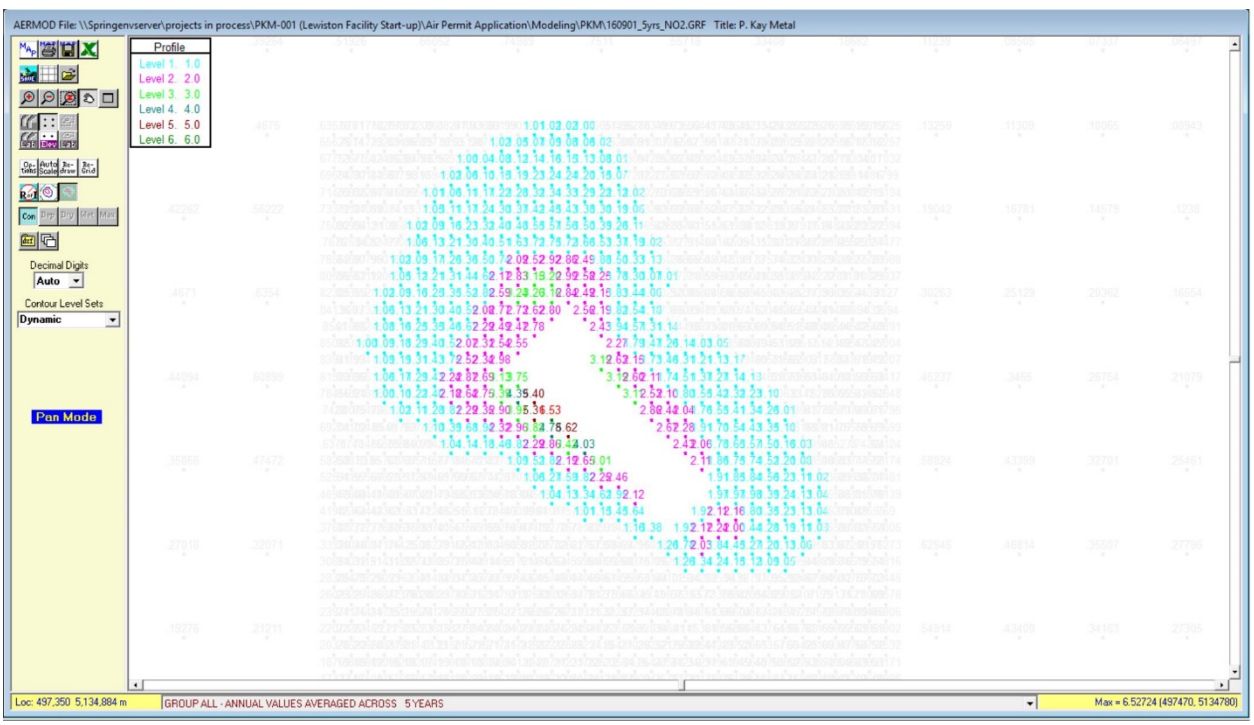

Figure 6: Annual NO_2 contour

6.1.1 Significant Impact Level Analyses

A SIL analysis was not performed because Spring Environmental chose to proceed directly to the cumulative NAAQS impact.

6.1.2 Cumulative NAAQS Impact Analyses

Table 9 provides results of Cumulative NAAQS Impact analyses.

Table 9. RESULTS FOR CUMULATIVE NAAQS IMPACT ANALYSES

Pollutant	Averaging Period	Modeled Design Concentration ($\mu g/m^3$)[a]	Background Concentration ($\mu g/m^3$)	Total Impact ($\mu g/m^3$)	NAAQS ($\mu g/m^3$)
$PM_{2.5}$[b]	24-hour	NA	NA	NA	35
	Annual	NA	NA	NA	12
PM_{10}[c]	24-hour	NA	NA	NA	150
NO_2[d]	1-hour	54	55	109	188
	Annual	3.9	7.5	11.4	100
SO_2[e]	1-hour	NA	NA	NA	196
	3-hour	NA	NA	NA	1,300
	24-hour	NA	NA	NA	365
	Annual	NA	NA	NA	80
CO[f]	1-hour	NA	NA	NA	40,000
	8-hour	NA	NA	NA	10,000

a. Micrograms/cubic meter
b. Particulate matter with an aerodynamic diameter less than or equal to a nominal 2.5 micrometers.
c. Particulate matter with an aerodynamic diameter less than or equal to a nominal 10 micrometers.
d. Nitrogen dioxide.
e. Sulfur dioxide.
f. Carbon monoxide.
g. Maximum of 5-year means (or a lesser averaging period if less than 5 years of meteorological data were used in the analyses) of 8th highest modeled concentrations for each year modeled.
h. Maximum of 5-year means (or a lesser averaging period if less than 5 years of meteorological data were used in the analyses) of maximum modeled concentrations for each year modeled.
i. Maximum of 6th highest modeled concentrations for a 5-year period (or the maximum of the 2nd highest modeled concentrations if only 1 year of meteorological data are modeled).
j. Maximum of 5-year means (or a lesser averaging period if less than 5 years of meteorological data were used in the analyses) of 4th highest modeled concentrations for each year modeled.
k. Maximum of 2nd highest modeled concentrations for each year modeled.

A cumulative NAAQS analysis was performed for all receptors as described above in Section 5.7 for NO_2. Figures 5 and 6 show contouring of the concentrations at each receptor. The highest values of NO_2 are all visible in the first two high density receptor grids, and the other grids have very low concentrations. There are no NAAQS violations as a result of the modeling.

The design concentration for the NO_2 1-hour averaging period is the maximum of the 5-year averages at each receptor of the 98th percentile of the annual distribution of maximum daily 1-hour ambient concentrations. The design concentration for the NO_2 annual averaging period is the maximum of the ambient concentrations at each receptor. Spring Environmental is confident that NAAQS compliance would still be demonstrated if additional receptors were used in the analysis. The model input data is conservative, especially the emissions rates. All emissions rates are based on a PTE from the facility if it were operating at maximum throughput continuously.

_X_ Model input and output files for the cumulative NAAQS impact analyses are provided with the application.

_N/A_ If there were modeled NAAQS violations, all violations were analyzed and clearly show that the project did not significantly contribute to those modeled violations. If there were multiple violations at a given receptor, all cumulative impacts (including background) for the averaging period analyzed were ranked along with the project contribution, and the project contributions were below the applicable SIL. A table was included to show all ranked impacts above the NAAQS along with the project contribution.

6.2 TAP Impact Analyses

Arsenic, Cadmium, and Formaldehyde are the three TAPs that were estimated to exceed the ELs. All three of these TAPs are carcinogens, therefore the design concentrations are the maximum ambient concentrations at each receptor averaged over five years. Modeling demonstrates that each of the TAPs are below the corresponding AACCs. TAP modeling was performed using the same conditions as NAAQS modeling.

Table 10 provides results of TAP impact analyses.

Table 10. RESULTS FOR TAP IMPACT ANALYSES

TAP	Averaging Period	Maximum Modeled Impact ($\mu g/m^3$)[a]	AAC or AACC ($\mu g/m^3$)
Arsenic	5 years	1.0E-5	2.30E-4
Cadmium	5 years	0.0	5.60E-4
Formaldehyde	5 years	2.8E-3	7.70E-2

a. Micrograms/cubic meter.

7.0 Quality Assurance/Control

- The most recent versions of all modeling programs were used.
- High density receptor grid provides assurance of no missing concentrations.
- Stack heights are within GEP.
- All conditions are conservatively based off of construction plans.
- All emissions calculations account for uncontrolled facility run time.
- Review of modeling analysis was performed by an engineer familiar with facility plans and model.

This Air Quality Monitoring Report was prepared by Betsy Speare, E.I.T. under the direction of Beth Fifield Hodgson, P.E. of Spring Environmental, Inc.

Spring Environmental Inc.
1011 N. Cedar Street
Spokane, WA 99201-1914
Tel: (509) 328-7500
Fax: (509) 328-7501

Appendix A
AERMOD Input and Results Summary

160914
BEE-Line Software Version: 10.0

Input File - 160914.PIP

Output File - 160914.TAB

Output File - 160914.SUM

Output File - 160914.SO

BPIP (Dated: 04274)
DATE : 9/14/2016
TIME : 15:35:54
C:\Beework\PKM\160914.BST BEESTWin BPIP-Prime Files 9/14/2016 3:35:54 PM

==========
BPIP PROCESSING INFORMATION:
==========

The P flag has been set for preparing downwash related data
for a model run utilizing the PRIME algorithm.

Inputs entered in METERS will be converted to meters using
a conversion factor of 1.0000. Output will be in meters.

The UTMP variable is set to UTMY. The input is assumed to be in
UTM coordinates. BPIP will move the UTM origin to the first pair of
UTM coordinates read. The UTM coordinates of the new origin will
be subtracted from all the other UTM coordinates entered to form
this new local coordinate system.

Plant north is set to 0.00 degrees with respect to True North.

C:\Beework\PKM\160914.BST BEESTWin BPIP-Prime Files 9/14/2016 3:35:54 PM

PRELIMINARY* GEP STACK HEIGHT RESULTS TABLE
(Output Units: meters)

Stack Name	Stack Height	Stack-Building Base Elevation Differences	GEP** EQN1	Preliminary* GEP Stack Height Value

ROTARY	7.62	-2.16	17.40	65.00
HOLDING	7.62	-0.93	16.17	65.00
FUGITIVE	7.62	-1.34	16.58	65.00
EXTRUDERS	7.62	0.35	14.89	65.00

* Results are based on Determinants 1 & 2 on pages 1 & 2 of the GEP Technical Support Document. Determinant 3 may be investigated for additional stack height credit. Final values result after Determinant 3 has been taken into consideration.

** Results were derived from Equation 1 on page 6 of GEP Technical Support Document. Values have been adjusted for any stack-building base elevation differences.

Note: Criteria for determining stack heights for modeling emission limitations for a source can be found in Table 3.1 of the GEP Technical Support Document.

BPIP (Dated: 04274)

DATE : 9/14/2016
TIME : 15:35:54

C:\Beework\PKM\160914.BST BEESTWin BPIP-Prime Files 9/14/2016 3:35:54 PM

BPIP output is in meters

SO	BUILDHGT	ROTARY	6.10	6.10	6.10	6.10	6.10	6.10
SO	BUILDHGT	ROTARY	6.10	6.10	6.10	6.10	6.10	6.10
SO	BUILDHGT	ROTARY	6.10	6.10	6.10	6.10	6.10	6.10
SO	BUILDHGT	ROTARY	6.10	6.10	6.10	6.10	6.10	6.10
SO	BUILDHGT	ROTARY	6.10	6.10	6.10	6.10	6.10	6.10
SO	BUILDHGT	ROTARY	6.10	6.10	6.10	6.10	6.10	6.10
SO	BUILDWID	ROTARY	136.54	143.77	146.64	145.04	145.76	150.31
SO	BUILDWID	ROTARY	150.28	145.69	136.68	123.51	106.58	86.42
SO	BUILDWID	ROTARY	63.64	51.66	70.15	91.46	109.98	125.16
SO	BUILDWID	ROTARY	136.54	143.77	146.64	145.04	145.76	150.31
SO	BUILDWID	ROTARY	150.28	145.69	136.68	123.51	106.58	86.42
SO	BUILDWID	ROTARY	63.64	51.66	70.15	91.46	109.98	125.16
SO	BUILDLEN	ROTARY	123.51	106.58	86.42	63.64	51.66	70.15
SO	BUILDLEN	ROTARY	91.46	109.98	125.16	136.54	143.77	146.64
SO	BUILDLEN	ROTARY	145.04	145.76	150.31	150.28	145.69	136.68
SO	BUILDLEN	ROTARY	123.51	106.58	86.42	63.64	51.66	70.15
SO	BUILDLEN	ROTARY	91.46	109.98	125.16	136.54	143.77	146.64

SO	BUILDLEN	ROTARY	145.04	145.76	150.31	150.28	145.69	136.68
SO	XBADJ	ROTARY	-14.62	-11.43	-7.88	-4.09	-9.27	-29.99
SO	XBADJ	ROTARY	-49.79	-68.08	-84.31	-97.97	-108.65	-116.04
SO	XBADJ	ROTARY	-119.90	-123.23	-128.09	-129.05	-126.09	-119.30
SO	XBADJ	ROTARY	-108.88	-95.16	-78.54	-59.54	-42.39	-40.17
SO	XBADJ	ROTARY	-41.66	-41.90	-40.86	-38.57	-35.12	-30.60
SO	XBADJ	ROTARY	-25.15	-22.53	-22.22	-21.24	-19.60	-17.38
SO	YBADJ	ROTARY	29.70	36.77	42.72	47.37	50.35	52.93
SO	YBADJ	ROTARY	53.91	53.24	50.96	47.13	41.87	35.33
SO	YBADJ	ROTARY	27.72	16.56	5.09	-4.06	-13.09	-21.73
SO	YBADJ	ROTARY	-29.70	-36.77	-42.72	-47.37	-50.35	-52.93
SO	YBADJ	ROTARY	-53.91	-53.24	-50.96	-47.13	-41.87	-35.33
SO	YBADJ	ROTARY	-27.72	-16.56	-5.09	4.06	13.09	21.73
SO	BUILDHGT	HOLDING	6.10	6.10	6.10	6.10	6.10	6.10
SO	BUILDHGT	HOLDING	6.10	6.10	6.10	6.10	6.10	6.10
SO	BUILDHGT	HOLDING	6.10	6.10	6.10	6.10	6.10	6.10
SO	BUILDHGT	HOLDING	6.10	6.10	6.10	6.10	6.10	6.10
SO	BUILDHGT	HOLDING	6.10	6.10	6.10	6.10	6.10	6.10
SO	BUILDHGT	HOLDING	6.10	6.10	6.10	6.10	6.10	6.10
SO	BUILDWID	HOLDING	136.54	143.77	146.64	145.04	145.76	150.31
SO	BUILDWID	HOLDING	150.28	145.69	136.68	123.51	106.58	86.42
SO	BUILDWID	HOLDING	63.64	51.66	70.15	91.46	109.98	125.16
SO	BUILDWID	HOLDING	136.54	143.77	146.64	145.04	145.76	150.31
SO	BUILDWID	HOLDING	150.28	145.69	136.68	123.51	106.58	86.42
SO	BUILDWID	HOLDING	63.64	51.66	70.15	91.46	109.98	125.16
SO	BUILDLEN	HOLDING	123.51	106.58	86.42	63.64	51.66	70.15
SO	BUILDLEN	HOLDING	91.46	109.98	125.16	136.54	143.77	146.64
SO	BUILDLEN	HOLDING	145.04	145.76	150.31	150.28	145.69	136.68
SO	BUILDLEN	HOLDING	123.51	106.58	86.42	63.64	51.66	70.15
SO	BUILDLEN	HOLDING	91.46	109.98	125.16	136.54	143.77	146.64
SO	BUILDLEN	HOLDING	145.04	145.76	150.31	150.28	145.69	136.68
SO	XBADJ	HOLDING	-58.77	-44.38	-28.65	-12.04	-4.15	-11.95
SO	XBADJ	HOLDING	-19.40	-26.25	-32.31	-37.38	-41.32	-44.01
SO	XBADJ	HOLDING	-45.35	-48.44	-55.32	-60.52	-63.88	-65.30
SO	XBADJ	HOLDING	-64.73	-62.20	-57.78	-51.60	-47.51	-58.20
SO	XBADJ	HOLDING	-72.06	-83.73	-92.86	-99.16	-102.45	-102.63
SO	XBADJ	HOLDING	-99.69	-97.32	-94.99	-89.76	-81.81	-71.38
SO	YBADJ	HOLDING	-30.89	-30.57	-29.31	-27.17	-24.44	-19.83
SO	YBADJ	HOLDING	-14.62	-8.97	-3.04	2.98	8.91	14.57
SO	YBADJ	HOLDING	19.78	21.68	23.12	26.33	28.74	30.27
SO	YBADJ	HOLDING	30.89	30.57	29.31	27.17	24.44	19.83
SO	YBADJ	HOLDING	14.62	8.97	3.04	-2.98	-8.91	-14.57
SO	YBADJ	HOLDING	-19.78	-21.68	-23.12	-26.33	-28.74	-30.27
SO	BUILDHGT	FUGITIVE	6.10	6.10	6.10	6.10	6.10	6.10

SO	BUILDHGT	FUGITIVE	6.10	6.10	6.10	6.10	6.10	6.10
SO	BUILDHGT	FUGITIVE	6.10	6.10	6.10	6.10	6.10	6.10
SO	BUILDHGT	FUGITIVE	6.10	6.10	6.10	6.10	6.10	6.10
SO	BUILDHGT	FUGITIVE	6.10	6.10	6.10	6.10	6.10	6.10
SO	BUILDHGT	FUGITIVE	6.10	6.10	6.10	6.10	6.10	6.10
SO	BUILDWID	FUGITIVE	136.54	143.77	146.64	145.04	145.76	150.31
SO	BUILDWID	FUGITIVE	150.28	145.69	136.68	123.51	106.58	86.42
SO	BUILDWID	FUGITIVE	63.64	51.66	70.15	91.46	109.98	125.16
SO	BUILDWID	FUGITIVE	136.54	143.77	146.64	145.04	145.76	150.31
SO	BUILDWID	FUGITIVE	150.28	145.69	136.68	123.51	106.58	86.42
SO	BUILDWID	FUGITIVE	63.64	51.66	70.15	91.46	109.98	125.16
SO	BUILDLEN	FUGITIVE	123.51	106.58	86.42	63.64	51.66	70.15
SO	BUILDLEN	FUGITIVE	91.46	109.98	125.16	136.54	143.77	146.64
SO	BUILDLEN	FUGITIVE	145.04	145.76	150.31	150.28	145.69	136.68
SO	BUILDLEN	FUGITIVE	123.51	106.58	86.42	63.64	51.66	70.15
SO	BUILDLEN	FUGITIVE	91.46	109.98	125.16	136.54	143.77	146.64
SO	BUILDLEN	FUGITIVE	145.04	145.76	150.31	150.28	145.69	136.68
SO	XBADJ	FUGITIVE	-45.62	-34.48	-22.29	-9.42	-5.35	-16.94
SO	XBADJ	FUGITIVE	-28.02	-38.25	-47.31	-54.93	-60.89	-65.00
SO	XBADJ	FUGITIVE	-67.13	-70.34	-76.68	-80.68	-82.24	-81.30
SO	XBADJ	FUGITIVE	-77.88	-72.10	-64.13	-54.22	-46.31	-53.21
SO	XBADJ	FUGITIVE	-63.44	-71.74	-77.86	-81.61	-82.89	-81.64
SO	XBADJ	FUGITIVE	-77.92	-75.42	-73.63	-69.60	-63.45	-55.38
SO	YBADJ	FUGITIVE	-13.34	-11.00	-8.32	-5.40	-2.54	1.52
SO	YBADJ	FUGITIVE	5.54	9.39	12.96	16.13	18.81	20.92
SO	YBADJ	FUGITIVE	22.40	20.48	18.13	17.71	16.75	15.27
SO	YBADJ	FUGITIVE	13.34	11.00	8.32	5.40	2.54	-1.52
SO	YBADJ	FUGITIVE	-5.54	-9.39	-12.96	-16.13	-18.81	-20.92
SO	YBADJ	FUGITIVE	-22.40	-20.48	-18.13	-17.71	-16.75	-15.27

SO	BUILDHGT	EXTRUDERS	6.10	6.10	6.10	6.10	6.10	6.10
SO	BUILDHGT	EXTRUDERS	6.10	6.10	6.10	6.10	6.10	6.10
SO	BUILDHGT	EXTRUDERS	6.10	6.10	6.10	6.10	6.10	6.10
SO	BUILDHGT	EXTRUDERS	6.10	6.10	6.10	6.10	6.10	6.10
SO	BUILDHGT	EXTRUDERS	6.10	6.10	6.10	6.10	6.10	6.10
SO	BUILDHGT	EXTRUDERS	6.10	6.10	6.10	6.10	6.10	6.10
SO	BUILDWID	EXTRUDERS	136.54	143.77	146.64	145.04	145.76	150.31
SO	BUILDWID	EXTRUDERS	150.28	145.69	136.68	123.51	106.58	86.42
SO	BUILDWID	EXTRUDERS	63.64	51.66	70.15	91.46	109.98	125.16
SO	BUILDWID	EXTRUDERS	136.54	143.77	146.64	145.04	145.76	150.31
SO	BUILDWID	EXTRUDERS	150.28	145.69	136.68	123.51	106.58	86.42
SO	BUILDWID	EXTRUDERS	63.64	51.66	70.15	91.46	109.98	125.16
SO	BUILDLEN	EXTRUDERS	123.51	106.58	86.42	63.64	51.66	70.15
SO	BUILDLEN	EXTRUDERS	91.46	109.98	125.16	136.54	143.77	146.64
SO	BUILDLEN	EXTRUDERS	145.04	145.76	150.31	150.28	145.69	136.68
SO	BUILDLEN	EXTRUDERS	123.51	106.58	86.42	63.64	51.66	70.15
SO	BUILDLEN	EXTRUDERS	91.46	109.98	125.16	136.54	143.77	146.64

160914

SO	BUILDLEN	EXTRUDERS	145.04	145.76	150.31	150.28	145.69	136.68
SO	XBADJ	EXTRUDERS	-76.19	-63.72	-49.32	-33.41	-25.58	-32.80
SO	XBADJ	EXTRUDERS	-39.01	-44.04	-47.74	-49.98	-50.70	-49.89
SO	XBADJ	EXTRUDERS	-47.56	-46.90	-50.08	-51.74	-51.83	-50.34
SO	XBADJ	EXTRUDERS	-47.32	-42.86	-37.11	-30.22	-26.08	-37.36
SO	XBADJ	EXTRUDERS	-52.44	-65.94	-77.43	-86.56	-93.07	-96.75
SO	XBADJ	EXTRUDERS	-97.49	-98.86	-100.23	-98.54	-93.87	-86.34
SO	YBADJ	EXTRUDERS	-18.29	-21.18	-23.43	-24.97	-25.98	-25.07
SO	YBADJ	EXTRUDERS	-23.40	-21.02	-18.00	-14.43	-10.43	-6.10
SO	YBADJ	EXTRUDERS	-1.60	0.25	2.28	6.71	10.95	14.84
SO	YBADJ	EXTRUDERS	18.29	21.18	23.43	24.97	25.98	25.07
SO	YBADJ	EXTRUDERS	23.40	21.02	18.00	14.43	10.43	6.10
SO	YBADJ	EXTRUDERS	1.60	-0.25	-2.28	-6.71	-10.95	-14.84

```
                                  160914_5yrs_NO2
 *** AERMOD - VERSION  15181 ***   *** P. Kay Metal
                         ***        09/14/16
 *** AERMET - VERSION  15181 ***   ***
                       ***        15:36:36

                                  PAGE   1
 **MODELOPTs:   RegDFAULT CONC      ELEV      NODRYDPLT NOWETDPLT ARM       RURAL

                                            ***     MODEL SETUP OPTIONS SUMMARY
  ***
 - - - - - - - - - - - - - - - - - - - - - - - - - - - - - - - - - - - - - - - - - -
- - - - - - - - - - - - - - - - - - - - - -

 **Model Is Setup For Calculation of Average CONCentration Values.

   --  DEPOSITION LOGIC  --
 **NO GAS DEPOSITION Data Provided.
 **NO PARTICLE DEPOSITION Data Provided.
 **Model Uses NO DRY DEPLETION.  DRYDPLT  =  F
 **Model Uses NO WET DEPLETION.  WETDPLT  =  F

 **Model Uses RURAL Dispersion Only.

 **Model Uses Regulatory DEFAULT Options:
        1. Stack-tip Downwash.
        2. Model Accounts for ELEVated Terrain Effects.
        3. Use Calms Processing Routine.
        4. Use Missing Data Processing Routine.
        5. No Exponential Decay.
        6. Ambient Ratio Method (ARM) Used for NO2 Conversion
              with a  1-hour NO2/NOx Ratio of  0.800
              with an Annual NO2/NOx Ratio of  0.750

 **Other Options Specified:
        CCVR_Sub - Meteorological data includes CCVR substitutions
        TEMP_Sub - Meteorological data includes TEMP substitutions

 **Model Assumes No FLAGPOLE Receptor Heights.

 **The User Specified a Pollutant Type of:  NO2

 **Note that special processing requirements apply for the 1-hour NO2 NAAQS - check
available guidance.
   Model will process user-specified ranks of daily maximum 1-hour values averaged
across the number of years modeled.
   For annual NO2 NAAQS modeling, the multi-year maximum of PERIOD values can be
simulated using the MULTYEAR keyword.
   Multi-year PERIOD and 1-hour values should only be done in a single model run
```

```
using the MULTYEAR option with a
   single multi-year meteorological data file using STARTEND keyword.

 **Model Calculates  1 Short Term Average(s) of:   1-HR
     and Calculates ANNUAL Averages

 **This Run Includes:      2 Source(s);       1 Source Group(s); and    9581
Receptor(s)
                with:      2 POINT(s), including
                           0 POINTCAP(s) and      0 POINTHOR(s)
                 and:      0 VOLUME source(s)
                 and:      0 AREA type source(s)
                 and:      0 LINE source(s)
                 and:      0 OPENPIT source(s)


 **Model Set To Continue RUNning After the Setup Testing.

 **The AERMET Input Meteorological Data Version Date:  15181

 **Output Options Selected:
          Model Outputs Tables of ANNUAL Averages by Receptor
          Model Outputs Tables of Highest Short Term Values by Receptor (RECTABLE
Keyword)
          Model Outputs External File(s) of High Values for Plotting (PLOTFILE
Keyword)
          Model Outputs Separate Summary File of High Ranked Values (SUMMFILE
Keyword)

 **NOTE:  The Following Flags May Appear Following CONC Values:  c for Calm Hours
                                                                 m for Missing
Hours
                                                                 b for Both Calm
and Missing Hours

 **Misc. Inputs:  Base Elev. for Pot. Temp. Profile (m MSL) =   436.17 ;  Decay
Coef. =    0.000     ;  Rot. Angle =     0.0
                  Emission Units = GRAMS/SEC                                ;
Emission Rate Unit Factor =   0.10000E+07
                  Output Units   = MICROGRAMS/M**3

 **Approximate Storage Requirements of Model =      3.9 MB of RAM.

 **Input Runstream File:  160914_5yrs_NO2_01.DTA through ..._05.DTA
 **Output Print File:     160914_5yrs_NO2_01.LST through ..._05.LST

 **Detailed Error/Message File:   C:\Beework\PKM\error_01.
```

*** METEOROLOGICAL DAYS SELECTED FOR PROCESSING ***
(1=YES; 0=NO)

```
           1 1 1 1 1 1 1 1 1 1   1 1 1 1 1 1 1 1 1 1   1 1 1 1 1 1 1 1 1 1   1 1 1
1 1 1 1 1 1 1   1 1 1 1 1 1 1 1 1 1
           1 1 1 1 1 1 1 1 1 1   1 1 1 1 1 1 1 1 1 1   1 1 1 1 1 1 1 1 1 1   1 1 1
1 1 1 1 1 1 1   1 1 1 1 1 1 1 1 1 1
           1 1 1 1 1 1 1 1 1 1   1 1 1 1 1 1 1 1 1 1   1 1 1 1 1 1 1 1 1 1   1 1 1
1 1 1 1 1 1 1   1 1 1 1 1 1 1 1 1 1
           1 1 1 1 1 1 1 1 1 1   1 1 1 1 1 1 1 1 1 1   1 1 1 1 1 1 1 1 1 1   1 1 1
1 1 1 1 1 1 1   1 1 1 1 1 1 1 1 1 1
           1 1 1 1 1 1 1 1 1 1   1 1 1 1 1 1 1 1 1 1   1 1 1 1 1 1 1 1 1 1   1 1 1
1 1 1 1 1 1 1   1 1 1 1 1 1 1 1 1 1
           1 1 1 1 1 1 1 1 1 1   1 1 1 1 1 1 1 1 1 1   1 1 1 1 1 1 1 1 1 1   1 1 1
1 1 1 1 1 1 1   1 1 1 1 1 1 1 1 1 1
           1 1 1 1 1 1 1 1 1 1   1 1 1 1 1 1 1 1 1 1   1 1 1 1 1 1 1 1 1 1   1 1 1
1 1 1 1 1 1 1   1 1 1 1 1 1 1 1 1 1
           1 1 1 1 1 1 1 1 1 1   1 1 1 1 1 1 1 1 1 1   1 1 1 1 1 1 1 1 1 1   1 1 1
1 1 1 1 1 1 1   1 1 1 1 1 1 1 1 1 1
           1 1 1 1 1 1 1 1 1 1   1 1 1 1 1
```

NOTE: METEOROLOGICAL DATA ACTUALLY PROCESSED WILL ALSO DEPEND ON WHAT IS INCLUDED IN THE DATA FILE.

*** UPPER BOUND OF FIRST THROUGH FIFTH WIND SPEED CATEGORIES ***
(METERS/SEC)

1.54, 3.09, 5.14, 8.23, 10.80,

*** UP TO THE FIRST 24 HOURS OF METEOROLOGICAL DATA ***

Surface file: AerMet2011_2015.SFC
Met Version: 15181
Profile file: AerMet2011_2015.PFL

Surface format: FREE

Profile format: FREE

Surface station no.: 24149 Upper air station no.: 4106
Name: LEWISTON NEZ PERCE CNTY AP, ID Name: UNKNOWN

Year: 2011 Year: 2011

First 24 hours of scalar data

YR	MO	DY	JDY	HR	H0	U*	W*	DT/DZ	ZICNV	ZIMCH	M-O LEN	Z0	BOWEN	ALBEDO	REF WS	WD	HT	REF TA	HT
11	01	01	1	01	-7.4	0.088	-9.000	-9.000	-999.	62.	7.9	0.10	0.69	1.00	2.01	158.	10.0	263.1	2.0
11	01	01	1	02	-7.5	0.089	-9.000	-9.000	-999.	64.	8.1	0.12	0.69	1.00	1.99	101.	10.0	263.1	2.0
11	01	01	1	03	-29.4	0.254	-9.000	-9.000	-999.	307.	48.3	0.14	0.69	1.00	3.35	80.	10.0	264.2	2.0
11	01	01	1	04	-7.5	0.088	-9.000	-9.000	-999.	94.	7.9	0.10	0.69	1.00	2.05	130.	10.0	263.1	2.0
11	01	01	1	05	-10.5	0.105	-9.000	-9.000	-999.	82.	9.6	0.12	0.69	1.00	2.35	112.	10.0	263.8	2.0
11	01	01	1	06	-3.6	0.061	-9.000	-9.000	-999.	36.	5.5	0.10	0.69	1.00	1.42	143.	10.0	263.1	2.0
11	01	01	1	07	-3.6	0.061	-9.000	-9.000	-999.	36.	5.5	0.10	0.69	1.00	1.42	135.	10.0	263.1	2.0
11	01	01	1	08	-1.8	0.045	-9.000	-9.000	-999.	23.	4.3	0.17	0.69	1.00	0.92	56.	10.0	262.0	2.0
11	01	01	1	09	-1.1	0.038	-9.000	-9.000	-999.	18.	4.2	0.10	0.69	0.54	0.89	121.	10.0	264.9	2.0
11	01	01	1	10	7.5	0.250	0.163	0.007	20.	300.	-181.7	0.14	0.69	0.40	2.54	89.	10.0	266.4	2.0
11	01	01	1	11	27.3	0.198	0.385	0.009	72.	212.	-24.7	0.10	0.69	0.35	1.96	137.	10.0	267.0	2.0
11	01	01	1	12	37.0	0.129	0.488	0.012	108.	112.	-5.0	0.10	0.69	0.33	1.04	134.	10.0	267.5	2.0
11	01	01	1	13	35.4	0.111	0.538	0.011	152.	89.	-3.4	0.10	0.69	0.33	0.84	126.	10.0	268.8	2.0

```
 11 01 01   1 14   22.6  0.141  0.495  0.010  185.  127.    -10.7  0.10   0.69
0.36    1.25  155.   10.0  269.2    2.0
 11 01 01   1 15    0.4  0.087  0.130  0.010  186.   62.   -139.8  0.09   0.69
0.43    0.97  187.   10.0  269.2    2.0
 11 01 01   1 16   -1.3  0.039 -9.000 -9.000 -999.   19.      3.9  0.12   0.69
0.61    0.87  108.   10.0  269.2    2.0
 11 01 01   1 17   -8.2  0.095 -9.000 -9.000 -999.   70.      9.0  0.14   0.69
1.00    2.01   85.   10.0  267.5    2.0
 11 01 01   1 18   -8.8  0.097 -9.000 -9.000 -999.   72.      8.9  0.12   0.69
1.00    2.16  104.   10.0  267.5    2.0
 11 01 01   1 19   -5.1  0.074 -9.000 -9.000 -999.   48.      6.8  0.12   0.69
1.00    1.65  119.   10.0  267.0    2.0
 11 01 01   1 20   -1.4  0.039 -9.000 -9.000 -999.   18.      3.5  0.10   0.69
1.00    0.89  167.   10.0  266.4    2.0
 11 01 01   1 21   -3.8  0.064 -9.000 -9.000 -999.   39.      5.9  0.12   0.69
1.00    1.43  108.   10.0  267.5    2.0
 11 01 01   1 22   -2.4  0.059 -9.000 -9.000 -999.   35.      7.6  0.10   0.69
1.00    1.38  131.   10.0  267.0    2.0
 11 01 01   1 23   -2.1  0.055 -9.000 -9.000 -999.   31.      7.0  0.10   0.69
1.00    1.28  122.   10.0  268.1    2.0
 11 01 01   1 24   -2.1  0.057 -9.000 -9.000 -999.   33.      7.7  0.15   0.69
1.00    1.20  264.   10.0  268.1    2.0


 First hour of profile data
 YR MO DY HR HEIGHT F  WDIR    WSPD AMB_TMP sigmaA  sigmaW  sigmaV
 11 01 01 01   10.0 1  158.    2.01   263.2   99.0  -99.00  -99.00

 F indicates top of profile (=1) or below (=0)
 *** AERMOD - VERSION  15181 ***   *** P. Kay Metal
                          ***        09/14/16
 *** AERMET - VERSION  15181 ***   ***
                       ***        15:36:36

                                  PAGE   4
 **MODELOPTs:   RegDFAULT CONC      ELEV      NODRYDPLT NOWETDPLT ARM       RURAL

                                  *** THE SUMMARY OF MAXIMUM ANNUAL RESULTS
AVERAGED OVER   5 YEARS ***


                                   ** CONC OF NO2      IN MICROGRAMS/M**3
                **


                         NETWORK
GROUP ID                       AVERAGE CONC                RECEPTOR  (XR, YR,
ZELEV, ZHILL, ZFLAG)  OF TYPE  GRID-ID
```

- -

ALL 1ST HIGHEST VALUE IS 3.92786 AT (497470.00, 5134780.00, 445.16, 445.16, 0.00) DC
2ND HIGHEST VALUE IS 3.47446 AT (497480.00, 5134770.00, 444.95, 444.95, 0.00) DC
3RD HIGHEST VALUE IS 3.21050 AT (497460.00, 5134790.00, 445.47, 445.47, 0.00) DC
4TH HIGHEST VALUE IS 3.16145 AT (497460.00, 5134780.00, 444.75, 444.75, 0.00) DC
5TH HIGHEST VALUE IS 2.91314 AT (497470.00, 5134770.00, 444.44, 444.44, 0.00) DC
6TH HIGHEST VALUE IS 2.61772 AT (497490.00, 5134760.00, 444.56, 446.41, 0.00) DC
7TH HIGHEST VALUE IS 2.57267 AT (497450.00, 5134790.00, 445.19, 445.19, 0.00) DC
8TH HIGHEST VALUE IS 2.34808 AT (497450.00, 5134780.00, 444.41, 444.41, 0.00) DC
9TH HIGHEST VALUE IS 2.28865 AT (497460.00, 5134770.00, 443.93, 443.93, 0.00) DC
10TH HIGHEST VALUE IS 2.19988 AT (497480.00, 5134760.00, 443.92, 446.41, 0.00) DC

*** RECEPTOR TYPES: GC = GRIDCART
GP = GRIDPOLR
DC = DISCCART
DP = DISCPOLR

↑ *** AERMOD - VERSION 15181 *** *** P. Kay Metal *** 09/14/16
*** AERMET - VERSION 15181 *** *** *** 15:36:36

PAGE 5
**MODELOPTs: RegDFAULT CONC ELEV NODRYDPLT NOWETDPLT ARM RURAL

*** THE SUMMARY OF MAXIMUM 1ST-HIGHEST MAX DAILY 1-HR RESULTS AVERAGED OVER 5 YEARS ***

** CONC OF NO2 IN MICROGRAMS/M**3 **

NETWORK
GROUP ID AVERAGE CONC RECEPTOR (XR, YR, ZELEV, ZHILL, ZFLAG) OF TYPE GRID-ID

- -

ALL 1ST HIGHEST VALUE IS 53.92519 AT (497520.00, 5134840.00, 447.72, 447.72, 0.00) DC
2ND HIGHEST VALUE IS 49.10710 AT (497420.00, 5134810.00, 446.12, 446.12, 0.00) DC
3RD HIGHEST VALUE IS 48.86335 AT (497510.00, 5134850.00, 447.56, 447.56, 0.00) DC
4TH HIGHEST VALUE IS 48.51359 AT (497510.00, 5134810.00, 447.35, 447.35, 0.00) DC
5TH HIGHEST VALUE IS 47.66015 AT (497530.00, 5134830.00, 447.85, 447.85, 0.00) DC
6TH HIGHEST VALUE IS 47.35509 AT (497520.00, 5134810.00, 447.49, 447.49, 0.00) DC
7TH HIGHEST VALUE IS 47.02423 AT (497500.00, 5134860.00, 447.40, 447.40, 0.00) DC
8TH HIGHEST VALUE IS 46.75043 AT (497420.00, 5134800.00, 445.59, 445.59, 0.00) DC
9TH HIGHEST VALUE IS 46.65943 AT (497520.00, 5134820.00, 447.59, 447.59, 0.00) DC
10TH HIGHEST VALUE IS 45.95268 AT (497540.00, 5134830.00, 448.02, 448.02, 0.00) DC

↑ *** AERMOD - VERSION 15181 *** *** P. Kay Metal *** 09/14/16
*** AERMET - VERSION 15181 *** *** *** 15:36:36

PAGE 6
**MODELOPTs: RegDFAULT CONC ELEV NODRYDPLT NOWETDPLT ARM RURAL

*** THE SUMMARY OF MAXIMUM 2ND-HIGHEST MAX DAILY 1-HR RESULTS AVERAGED OVER 5 YEARS ***

** CONC OF NO2 IN MICROGRAMS/M**3 **

NETWORK
GROUP ID AVERAGE CONC RECEPTOR (XR, YR, ZELEV, ZHILL, ZFLAG) OF TYPE GRID-ID
- -

ALL 1ST HIGHEST VALUE IS 53.35214 AT (497520.00, 5134840.00, 447.72, 447.72, 0.00) DC
2ND HIGHEST VALUE IS 48.59990 AT (497420.00, 5134810.00,

```
446.12,   446.12,    0.00)  DC
          3RD HIGHEST VALUE IS      48.23386 AT (  497510.00,  5134810.00,
447.35,   447.35,    0.00)  DC
          4TH HIGHEST VALUE IS      47.39413 AT (  497530.00,  5134830.00,
447.85,   447.85,    0.00)  DC
          5TH HIGHEST VALUE IS      47.14497 AT (  497510.00,  5134850.00,
447.56,   447.56,    0.00)  DC
          6TH HIGHEST VALUE IS      46.90818 AT (  497520.00,  5134810.00,
447.49,   447.49,    0.00)  DC
          7TH HIGHEST VALUE IS      46.28477 AT (  497520.00,  5134820.00,
447.59,   447.59,    0.00)  DC
          8TH HIGHEST VALUE IS      46.24850 AT (  497420.00,  5134800.00,
445.59,   445.59,    0.00)  DC
          9TH HIGHEST VALUE IS      46.13204 AT (  497500.00,  5134860.00,
447.40,   447.40,    0.00)  DC
         10TH HIGHEST VALUE IS      45.31646 AT (  497540.00,  5134830.00,
448.02,   448.02,    0.00)  DC
↑ *** AERMOD - VERSION  15181 ***   *** P. Kay Metal
                          ***        09/14/16
 *** AERMET - VERSION  15181 ***   ***
                       ***        15:36:36

                                   PAGE   7
 **MODELOPTs:   RegDFAULT CONC      ELEV      NODRYDPLT NOWETDPLT ARM       RURAL

                      *** THE SUMMARY OF MAXIMUM   3RD-HIGHEST MAX DAILY  1-HR
RESULTS AVERAGED OVER   5 YEARS ***


                                     ** CONC OF NO2      IN MICROGRAMS/M**3
                **


                        NETWORK
GROUP ID                      AVERAGE CONC                RECEPTOR  (XR, YR,
ZELEV, ZHILL, ZFLAG)  OF TYPE  GRID-ID
- - - - - - - - - - - - - - - - - - - - - - - - - - - - - - - - - - - - - - - -
- - - - - - - - - - - - - - - - - - -

ALL       1ST HIGHEST VALUE IS      52.88795 AT (  497520.00,  5134840.00,
447.72,   447.72,    0.00)  DC
          2ND HIGHEST VALUE IS      48.05560 AT (  497420.00,  5134810.00,
446.12,   446.12,    0.00)  DC
          3RD HIGHEST VALUE IS      47.99825 AT (  497510.00,  5134810.00,
447.35,   447.35,    0.00)  DC
          4TH HIGHEST VALUE IS      46.82371 AT (  497530.00,  5134830.00,
447.85,   447.85,    0.00)  DC
          5TH HIGHEST VALUE IS      46.05403 AT (  497520.00,  5134820.00,
```

```
447.59,   447.59,    0.00)  DC
          6TH HIGHEST VALUE IS      45.93867 AT (  497510.00,  5134850.00,
447.56,   447.56,    0.00)  DC
          7TH HIGHEST VALUE IS      45.81846 AT (  497520.00,  5134810.00,
447.49,   447.49,    0.00)  DC
          8TH HIGHEST VALUE IS      45.69485 AT (  497500.00,  5134860.00,
447.40,   447.40,    0.00)  DC
          9TH HIGHEST VALUE IS      45.57095 AT (  497420.00,  5134800.00,
445.59,   445.59,    0.00)  DC
         10TH HIGHEST VALUE IS      44.55238 AT (  497540.00,  5134830.00,
448.02,   448.02,    0.00)  DC
↑ *** AERMOD - VERSION  15181 ***   *** P. Kay Metal
                         ***        09/14/16
 *** AERMET - VERSION  15181 ***   ***
                       ***        15:36:36

                                   PAGE   8
 **MODELOPTs:   RegDFAULT CONC      ELEV      NODRYDPLT NOWETDPLT ARM       RURAL

                     *** THE SUMMARY OF MAXIMUM   4TH-HIGHEST MAX DAILY  1-HR
RESULTS AVERAGED OVER   5 YEARS ***


                                     ** CONC OF NO2      IN MICROGRAMS/M**3
                **


                         NETWORK
GROUP ID                       AVERAGE CONC                RECEPTOR  (XR, YR,
ZELEV, ZHILL, ZFLAG)  OF TYPE  GRID-ID
- - - - - - - - - - - - - - - - - - - - - - - - - - - - - - - - - - - - - - - - -
- - - - - - - - - - - - - - - - - -

ALL       1ST HIGHEST VALUE IS      52.49516 AT (  497520.00,  5134840.00,
447.72,   447.72,    0.00)  DC
          2ND HIGHEST VALUE IS      47.66959 AT (  497420.00,  5134810.00,
446.12,   446.12,    0.00)  DC
          3RD HIGHEST VALUE IS      47.46810 AT (  497510.00,  5134810.00,
447.35,   447.35,    0.00)  DC
          4TH HIGHEST VALUE IS      46.64677 AT (  497530.00,  5134830.00,
447.85,   447.85,    0.00)  DC
          5TH HIGHEST VALUE IS      45.43289 AT (  497520.00,  5134820.00,
447.59,   447.59,    0.00)  DC
          6TH HIGHEST VALUE IS      45.30475 AT (  497500.00,  5134860.00,
447.40,   447.40,    0.00)  DC
          7TH HIGHEST VALUE IS      45.17537 AT (  497420.00,  5134800.00,
445.59,   445.59,    0.00)  DC
          8TH HIGHEST VALUE IS      45.06068 AT (  497510.00,  5134850.00,
```

```
447.56,   447.56,    0.00)  DC
          9TH HIGHEST VALUE IS      44.86649 AT (  497520.00,  5134810.00,
447.49,   447.49,    0.00)  DC
         10TH HIGHEST VALUE IS      44.41986 AT (  497540.00,  5134830.00,
448.02,   448.02,    0.00)  DC
```



```
                      *** THE SUMMARY OF MAXIMUM   5TH-HIGHEST MAX DAILY  1-HR
RESULTS AVERAGED OVER   5 YEARS ***


                                     ** CONC OF NO2      IN MICROGRAMS/M**3
               **


                         NETWORK
GROUP ID                       AVERAGE CONC                RECEPTOR  (XR, YR,
ZELEV, ZHILL, ZFLAG)  OF TYPE  GRID-ID
- - - - - - - - - - - - - - - - - - - - - - - - - - - - - - - - - - - - - - - - -
- - - - - - - - - - - - - - - - - -

ALL       1ST HIGHEST VALUE IS      52.07212 AT (  497520.00,  5134840.00,
447.72,   447.72,    0.00)  DC
          2ND HIGHEST VALUE IS      47.10905 AT (  497420.00,  5134810.00,
446.12,   446.12,    0.00)  DC
          3RD HIGHEST VALUE IS      46.60599 AT (  497510.00,  5134810.00,
447.35,   447.35,    0.00)  DC
          4TH HIGHEST VALUE IS      46.00918 AT (  497530.00,  5134830.00,
447.85,   447.85,    0.00)  DC
          5TH HIGHEST VALUE IS      45.02025 AT (  497500.00,  5134860.00,
447.40,   447.40,    0.00)  DC
          6TH HIGHEST VALUE IS      44.96570 AT (  497420.00,  5134800.00,
445.59,   445.59,    0.00)  DC
          7TH HIGHEST VALUE IS      44.54494 AT (  497520.00,  5134820.00,
447.59,   447.59,    0.00)  DC
          8TH HIGHEST VALUE IS      44.49533 AT (  497510.00,  5134850.00,
447.56,   447.56,    0.00)  DC
          9TH HIGHEST VALUE IS      44.41709 AT (  497520.00,  5134810.00,
447.49,   447.49,    0.00)  DC
         10TH HIGHEST VALUE IS      43.48427 AT (  497540.00,  5134830.00,
448.02,   448.02,    0.00)  DC
↑ *** AERMOD - VERSION  15181 ***   *** P. Kay Metal
```

**MODELOPTs: RegDFAULT CONC ELEV NODRYDPLT NOWETDPLT ARM RURAL

*** THE SUMMARY OF MAXIMUM 6TH-HIGHEST MAX DAILY 1-HR RESULTS AVERAGED OVER 5 YEARS ***

** CONC OF NO2 IN MICROGRAMS/M**3 **

GROUP ID		NETWORK AVERAGE CONC		RECEPTOR (XR, YR, ZELEV, ZHILL, ZFLAG)	OF TYPE	GRID-ID
ALL	1ST HIGHEST VALUE IS	51.55931	AT	(497520.00, 5134840.00, 447.72, 447.72, 0.00)	DC	
	2ND HIGHEST VALUE IS	46.58913	AT	(497420.00, 5134810.00, 446.12, 446.12, 0.00)	DC	
	3RD HIGHEST VALUE IS	46.28847	AT	(497510.00, 5134810.00, 447.35, 447.35, 0.00)	DC	
	4TH HIGHEST VALUE IS	45.56858	AT	(497530.00, 5134830.00, 447.85, 447.85, 0.00)	DC	
	5TH HIGHEST VALUE IS	44.79573	AT	(497420.00, 5134800.00, 445.59, 445.59, 0.00)	DC	
	6TH HIGHEST VALUE IS	44.52794	AT	(497500.00, 5134860.00, 447.40, 447.40, 0.00)	DC	
	7TH HIGHEST VALUE IS	44.10515	AT	(497510.00, 5134850.00, 447.56, 447.56, 0.00)	DC	
	8TH HIGHEST VALUE IS	43.83871	AT	(497520.00, 5134820.00, 447.59, 447.59, 0.00)	DC	
	9TH HIGHEST VALUE IS	43.67931	AT	(497520.00, 5134810.00, 447.49, 447.49, 0.00)	DC	
	10TH HIGHEST VALUE IS	42.92880	AT	(497490.00, 5134860.00, 447.30, 447.30, 0.00)	DC	

*** RECEPTOR TYPES: GC = GRIDCART
GP = GRIDPOLR
DC = DISCCART
DP = DISCPOLR

*** AERMOD - VERSION 15181 *** *** P. Kay Metal

**MODELOPTs: RegDFAULT CONC ELEV NODRYDPLT NOWETDPLT ARM RURAL

*** Message Summary : AERMOD Model Execution ***

--------- Summary of Total Messages --------

A Total of 0 Fatal Error Message(s)
A Total of 1 Warning Message(s)
A Total of 940 Informational Message(s)

A Total of 43824 Hours Were Processed

A Total of 430 Calm Hours Identified

A Total of 510 Missing Hours Identified (1.16 Percent)

******** FATAL ERROR MESSAGES ********
*** NONE ***

******** WARNING MESSAGES ********
CO W361 15 COCARD: Multiyear PERIOD/ANNUAL values for NO2/SO2 require MULTYEAR Opt

```
 *** AERMOD - VERSION  15181 ***   *** P. Kay Metal
                         ***        09/14/16
 *** AERMET - VERSION  15181 ***   ***
                       ***        16:06:50

                                  PAGE   1
 **MODELOPTs:   RegDFAULT CONC      ELEV      NODRYDPLT NOWETDPLT RURAL

                                            ***     MODEL SETUP OPTIONS SUMMARY
  ***
 - - - - - - - - - - - - - - - - - - - - - - - - - - - - - - - - - - - - - - - - -
- - - - - - - - - - - - - - - - - - - - - -

 **Model Is Setup For Calculation of Average CONCentration Values.

   --  DEPOSITION LOGIC  --
 **NO GAS DEPOSITION Data Provided.
 **NO PARTICLE DEPOSITION Data Provided.
 **Model Uses NO DRY DEPLETION.  DRYDPLT  =  F
 **Model Uses NO WET DEPLETION.  WETDPLT  =  F

 **Model Uses RURAL Dispersion Only.

 **Model Uses Regulatory DEFAULT Options:
        1. Stack-tip Downwash.
        2. Model Accounts for ELEVated Terrain Effects.
        3. Use Calms Processing Routine.
        4. Use Missing Data Processing Routine.
        5. No Exponential Decay.

 **Other Options Specified:
        CCVR_Sub - Meteorological data includes CCVR substitutions
        TEMP_Sub - Meteorological data includes TEMP substitutions

 **Model Assumes No FLAGPOLE Receptor Heights.

 **The User Specified a Pollutant Type of:  FORMALDE

 **Model Calculates PERIOD Averages Only

 **This Run Includes:      2 Source(s);       1 Source Group(s); and    9581
Receptor(s)
                with:      2 POINT(s), including
                           0 POINTCAP(s) and      0 POINTHOR(s)
                 and:      0 VOLUME source(s)
                 and:      0 AREA type source(s)
                 and:      0 LINE source(s)
                 and:      0 OPENPIT source(s)
```

```
 **Model Set To Continue RUNning After the Setup Testing.

 **The AERMET Input Meteorological Data Version Date:  15181

 **Output Options Selected:
          Model Outputs Tables of PERIOD Averages by Receptor
          Model Outputs External File(s) of High Values for Plotting (PLOTFILE
Keyword)
          Model Outputs Separate Summary File of High Ranked Values (SUMMFILE
Keyword)

 **NOTE:  The Following Flags May Appear Following CONC Values:  c for Calm Hours
                                                                 m for Missing
Hours
                                                                 b for Both Calm
and Missing Hours

 **Misc. Inputs:  Base Elev. for Pot. Temp. Profile (m MSL) =   436.17 ;  Decay
Coef. =    0.000     ;  Rot. Angle =     0.0
                  Emission Units = GRAMS/SEC                               ;
Emission Rate Unit Factor =   0.10000E+07
                  Output Units   = MICROGRAMS/M**3

 **Approximate Storage Requirements of Model =      3.7 MB of RAM.

 **Input Runstream File:  160914_5yrs_FORMALDE_01.DTA through ..._05.DTA
 **Output Print File:     160914_5yrs_FORMALDE_01.LST through ..._05.LST

 **Detailed Error/Message File:   C:\Beework\PKM\error_01.

 **File for Summary of Results:   C:\Beework\PKM\160914_5yrs_FORMALDE_01.SUM

 *** AERMOD - VERSION  15181 ***   *** P. Kay Metal
                         ***        09/14/16
 *** AERMET - VERSION  15181 ***   ***
                       ***        16:06:50

                                  PAGE   2
 **MODELOPTs:   RegDFAULT CONC      ELEV      NODRYDPLT NOWETDPLT RURAL

                                          *** METEOROLOGICAL DAYS SELECTED FOR
PROCESSING ***
                                                                (1=YES; 0=NO)

           1 1 1 1 1 1 1 1 1 1   1 1 1 1 1 1 1 1 1 1   1 1 1 1 1 1 1 1 1 1   1 1 1
1 1 1 1 1 1 1   1 1 1 1 1 1 1 1 1 1
```

```
           1 1 1 1 1 1 1 1 1 1   1 1 1 1 1 1 1 1 1 1   1 1 1 1 1 1 1 1 1 1   1 1 1
1 1 1 1 1 1   1 1 1 1 1 1 1 1 1 1
           1 1 1 1 1 1 1 1 1 1   1 1 1 1 1 1 1 1 1 1   1 1 1 1 1 1 1 1 1 1   1 1 1
1 1 1 1 1 1   1 1 1 1 1 1 1 1 1 1
           1 1 1 1 1 1 1 1 1 1   1 1 1 1 1 1 1 1 1 1   1 1 1 1 1 1 1 1 1 1   1 1 1
1 1 1 1 1 1   1 1 1 1 1 1 1 1 1 1
           1 1 1 1 1 1 1 1 1 1   1 1 1 1 1 1 1 1 1 1   1 1 1 1 1 1 1 1 1 1   1 1 1
1 1 1 1 1 1   1 1 1 1 1 1 1 1 1 1
           1 1 1 1 1 1 1 1 1 1   1 1 1 1 1 1 1 1 1 1   1 1 1 1 1 1 1 1 1 1   1 1 1
1 1 1 1 1 1   1 1 1 1 1 1 1 1 1 1
           1 1 1 1 1 1 1 1 1 1   1 1 1 1 1 1 1 1 1 1   1 1 1 1 1 1 1 1 1 1   1 1 1
1 1 1 1 1 1   1 1 1 1 1 1 1 1 1 1
           1 1 1 1 1 1 1 1 1 1   1 1 1 1 1
```

NOTE: METEOROLOGICAL DATA ACTUALLY PROCESSED WILL ALSO DEPEND ON WHAT IS INCLUDED IN THE DATA FILE.

*** UPPER BOUND OF FIRST THROUGH FIFTH WIND SPEED CATEGORIES ***

(METERS/SEC)

1.54, 3.09, 5.14, 8.23, 10.80,

*** AERMOD - VERSION 15181 *** *** P. Kay Metal ***

09/14/16

*** AERMET - VERSION 15181 *** *** ***

16:06:50

PAGE 3

**MODELOPTs: RegDFAULT CONC ELEV NODRYDPLT NOWETDPLT RURAL

*** UP TO THE FIRST 24 HOURS OF METEOROLOGICAL DATA ***

Surface file: AerMet2011_2015.SFC
Met Version: 15181
Profile file: AerMet2011_2015.PFL

Surface format: FREE

Profile format: FREE

Surface station no.: 24149 Upper air station no.: 4106
Name: LEWISTON NEZ PERCE CNTY AP, ID Name: UNKNOWN

Year: 2011 Year: 2011

```
 First 24 hours of scalar data
 YR MO DY JDY HR     H0     U*     W*  DT/DZ ZICNV ZIMCH  M-O LEN    Z0  BOWEN
ALBEDO  REF WS   WD     HT  REF TA     HT
- - - - - - - - - - - - - - - - - - - - - - - - - - - - - - - - - - - - - - - - - - -
- - - - - - - - - - - - - - - - - - - -
 11 01 01   1 01   -7.4  0.088 -9.000 -9.000 -999.   62.      7.9  0.10   0.69
1.00    2.01  158.   10.0  263.1    2.0
 11 01 01   1 02   -7.5  0.089 -9.000 -9.000 -999.   64.      8.1  0.12   0.69
1.00    1.99  101.   10.0  263.1    2.0
 11 01 01   1 03  -29.4  0.254 -9.000 -9.000 -999.  307.     48.3  0.14   0.69
1.00    3.35   80.   10.0  264.2    2.0
 11 01 01   1 04   -7.5  0.088 -9.000 -9.000 -999.   94.      7.9  0.10   0.69
1.00    2.05  130.   10.0  263.1    2.0
 11 01 01   1 05  -10.5  0.105 -9.000 -9.000 -999.   82.      9.6  0.12   0.69
1.00    2.35  112.   10.0  263.8    2.0
 11 01 01   1 06   -3.6  0.061 -9.000 -9.000 -999.   36.      5.5  0.10   0.69
1.00    1.42  143.   10.0  263.1    2.0
 11 01 01   1 07   -3.6  0.061 -9.000 -9.000 -999.   36.      5.5  0.10   0.69
1.00    1.42  135.   10.0  263.1    2.0
 11 01 01   1 08   -1.8  0.045 -9.000 -9.000 -999.   23.      4.3  0.17   0.69
1.00    0.92   56.   10.0  262.0    2.0
 11 01 01   1 09   -1.1  0.038 -9.000 -9.000 -999.   18.      4.2  0.10   0.69
0.54    0.89  121.   10.0  264.9    2.0
 11 01 01   1 10    7.5  0.250  0.163  0.007   20.  300.   -181.7  0.14   0.69
0.40    2.54   89.   10.0  266.4    2.0
 11 01 01   1 11   27.3  0.198  0.385  0.009   72.  212.    -24.7  0.10   0.69
0.35    1.96  137.   10.0  267.0    2.0
 11 01 01   1 12   37.0  0.129  0.488  0.012  108.  112.     -5.0  0.10   0.69
0.33    1.04  134.   10.0  267.5    2.0
 11 01 01   1 13   35.4  0.111  0.538  0.011  152.   89.     -3.4  0.10   0.69
0.33    0.84  126.   10.0  268.8    2.0
 11 01 01   1 14   22.6  0.141  0.495  0.010  185.  127.    -10.7  0.10   0.69
0.36    1.25  155.   10.0  269.2    2.0
 11 01 01   1 15    0.4  0.087  0.130  0.010  186.   62.   -139.8  0.09   0.69
0.43    0.97  187.   10.0  269.2    2.0
 11 01 01   1 16   -1.3  0.039 -9.000 -9.000 -999.   19.      3.9  0.12   0.69
0.61    0.87  108.   10.0  269.2    2.0
 11 01 01   1 17   -8.2  0.095 -9.000 -9.000 -999.   70.      9.0  0.14   0.69
1.00    2.01   85.   10.0  267.5    2.0
 11 01 01   1 18   -8.8  0.097 -9.000 -9.000 -999.   72.      8.9  0.12   0.69
1.00    2.16  104.   10.0  267.5    2.0
 11 01 01   1 19   -5.1  0.074 -9.000 -9.000 -999.   48.      6.8  0.12   0.69
1.00    1.65  119.   10.0  267.0    2.0
 11 01 01   1 20   -1.4  0.039 -9.000 -9.000 -999.   18.      3.5  0.10   0.69
1.00    0.89  167.   10.0  266.4    2.0
 11 01 01   1 21   -3.8  0.064 -9.000 -9.000 -999.   39.      5.9  0.12   0.69
1.00    1.43  108.   10.0  267.5    2.0
```

```
 11 01 01   1 22   -2.4  0.059 -9.000 -9.000 -999.   35.      7.6  0.10   0.69
1.00    1.38  131.   10.0  267.0    2.0
 11 01 01   1 23   -2.1  0.055 -9.000 -9.000 -999.   31.      7.0  0.10   0.69
1.00    1.28  122.   10.0  268.1    2.0
 11 01 01   1 24   -2.1  0.057 -9.000 -9.000 -999.   33.      7.7  0.15   0.69
1.00    1.20  264.   10.0  268.1    2.0


 First hour of profile data
 YR MO DY HR HEIGHT F  WDIR    WSPD AMB_TMP sigmaA  sigmaW  sigmaV
 11 01 01 01   10.0 1  158.    2.01   263.2   99.0  -99.00  -99.00

 F indicates top of profile (=1) or below (=0)
 *** AERMOD - VERSION  15181 ***   *** P. Kay Metal
                          ***        09/14/16
 *** AERMET - VERSION  15181 ***   ***
                       ***        16:06:50

                                   PAGE   4
 **MODELOPTs:   RegDFAULT CONC      ELEV      NODRYDPLT NOWETDPLT RURAL

                                        *** THE SUMMARY OF MAXIMUM PERIOD ( 43824
HRS) RESULTS ***


                                    ** CONC OF FORMALDE IN MICROGRAMS/M**3
                **


                        NETWORK
GROUP ID                      AVERAGE CONC                RECEPTOR  (XR, YR,
ZELEV, ZHILL, ZFLAG)  OF TYPE  GRID-ID
- - - - - - - - - - - - - - - - - - - - - - - - - - - - - - - - - - - - - - - - - -
- - - - - - - - - - - - - - - - - - -

ALL       1ST HIGHEST VALUE IS       0.00178 AT (  497470.00,  5134780.00,
445.16,   445.16,    0.00)  DC
          2ND HIGHEST VALUE IS       0.00163 AT (  497480.00,  5134770.00,
444.95,   444.95,    0.00)  DC
          3RD HIGHEST VALUE IS       0.00148 AT (  497460.00,  5134780.00,
444.75,   444.75,    0.00)  DC
          4TH HIGHEST VALUE IS       0.00146 AT (  497460.00,  5134790.00,
445.47,   445.47,    0.00)  DC
          5TH HIGHEST VALUE IS       0.00140 AT (  497470.00,  5134770.00,
444.44,   444.44,    0.00)  DC
          6TH HIGHEST VALUE IS       0.00132 AT (  497490.00,  5134760.00,
444.56,   446.41,    0.00)  DC
          7TH HIGHEST VALUE IS       0.00121 AT (  497450.00,  5134790.00,
```

```
445.19,   445.19,    0.00)  DC
          8TH HIGHEST VALUE IS       0.00115 AT (  497500.00,  5134750.00,
444.25,   444.25,    0.00)  DC
          9TH HIGHEST VALUE IS       0.00114 AT (  497450.00,  5134780.00,
444.41,   444.41,    0.00)  DC
         10TH HIGHEST VALUE IS       0.00114 AT (  497480.00,  5134760.00,
443.92,   446.41,    0.00)  DC


 *** RECEPTOR TYPES:  GC = GRIDCART
                      GP = GRIDPOLR
                      DC = DISCCART
                      DP = DISCPOLR
 *** AERMOD - VERSION  15181 ***   *** P. Kay Metal
                         ***        09/14/16
 *** AERMET - VERSION  15181 ***   ***
                        ***        16:06:50

                                   PAGE   5
 **MODELOPTs:   RegDFAULT CONC      ELEV      NODRYDPLT NOWETDPLT RURAL

 *** Message Summary : AERMOD Model Execution ***

  --------- Summary of Total Messages --------

 A Total of            0 Fatal Error Message(s)
 A Total of            0 Warning Message(s)
 A Total of          940 Informational Message(s)

 A Total of        43824 Hours Were Processed

 A Total of          430 Calm Hours Identified

 A Total of          510 Missing Hours Identified (  1.16 Percent)


    ******** FATAL ERROR MESSAGES ********
               ***  NONE  ***


    ********   WARNING MESSAGES   ********
               ***  NONE  ***
```

```
 *** AERMOD - VERSION  15181 ***   *** P. Kay Metal
                         ***        09/14/16
 *** AERMET - VERSION  15181 ***   ***
                       ***        15:56:51

                                  PAGE   1
 **MODELOPTs:   RegDFAULT CONC      ELEV      NODRYDPLT NOWETDPLT RURAL

                                            ***     MODEL SETUP OPTIONS SUMMARY
  ***
 - - - - - - - - - - - - - - - - - - - - - - - - - - - - - - - - - - - - - - - - -
- - - - - - - - - - - - - - - - - - - - - -

 **Model Is Setup For Calculation of Average CONCentration Values.

   --  DEPOSITION LOGIC  --
 **NO GAS DEPOSITION Data Provided.
 **NO PARTICLE DEPOSITION Data Provided.
 **Model Uses NO DRY DEPLETION.  DRYDPLT  =  F
 **Model Uses NO WET DEPLETION.  WETDPLT  =  F

 **Model Uses RURAL Dispersion Only.

 **Model Uses Regulatory DEFAULT Options:
        1. Stack-tip Downwash.
        2. Model Accounts for ELEVated Terrain Effects.
        3. Use Calms Processing Routine.
        4. Use Missing Data Processing Routine.
        5. No Exponential Decay.

 **Other Options Specified:
        CCVR_Sub - Meteorological data includes CCVR substitutions
        TEMP_Sub - Meteorological data includes TEMP substitutions

 **Model Assumes No FLAGPOLE Receptor Heights.

 **The User Specified a Pollutant Type of:  CADMIUM

 **Model Calculates PERIOD Averages Only

 **This Run Includes:      2 Source(s);       1 Source Group(s); and    9581
Receptor(s)
                with:      2 POINT(s), including
                           0 POINTCAP(s) and      0 POINTHOR(s)
                 and:      0 VOLUME source(s)
                 and:      0 AREA type source(s)
                 and:      0 LINE source(s)
                 and:      0 OPENPIT source(s)
```

```
 **Model Set To Continue RUNning After the Setup Testing.

 **The AERMET Input Meteorological Data Version Date:  15181

 **Output Options Selected:
          Model Outputs Tables of PERIOD Averages by Receptor
          Model Outputs External File(s) of High Values for Plotting (PLOTFILE
Keyword)
          Model Outputs Separate Summary File of High Ranked Values (SUMMFILE
Keyword)

 **NOTE:  The Following Flags May Appear Following CONC Values:  c for Calm Hours
                                                                 m for Missing
Hours
                                                                 b for Both Calm
and Missing Hours

 **Misc. Inputs:  Base Elev. for Pot. Temp. Profile (m MSL) =   436.17 ;  Decay
Coef. =    0.000     ;  Rot. Angle =     0.0
                  Emission Units = GRAMS/SEC                               ;
Emission Rate Unit Factor =   0.10000E+07
                  Output Units   = MICROGRAMS/M**3

 **Approximate Storage Requirements of Model =      3.7 MB of RAM.

 **Input Runstream File:  160914_5yrs_CADMIUM_01.DTA through ..._05.DTA
 **Output Print File:     160914_5yrs_CADMIUM_01.LST through ..._05.LST

 **Detailed Error/Message File:   C:\Beework\PKM\error_01.

 **File for Summary of Results:   C:\Beework\PKM\160914_5yrs_CADMIUM_01.SUM

 *** AERMOD - VERSION  15181 ***   *** P. Kay Metal
                         ***        09/14/16
 *** AERMET - VERSION  15181 ***   ***
                       ***        15:56:51

                                  PAGE   2
 **MODELOPTs:   RegDFAULT CONC      ELEV      NODRYDPLT NOWETDPLT RURAL

                                          *** METEOROLOGICAL DAYS SELECTED FOR
PROCESSING ***
                                                                (1=YES; 0=NO)

            1 1 1 1 1 1 1 1 1 1   1 1 1 1 1 1 1 1 1 1   1 1 1 1 1 1 1 1 1 1   1 1 1
1 1 1 1 1 1 1   1 1 1 1 1 1 1 1 1 1
```

```
           1 1 1 1 1 1 1 1 1 1   1 1 1 1 1 1 1 1 1 1   1 1 1 1 1 1 1 1 1 1   1 1 1
1 1 1 1 1 1   1 1 1 1 1 1 1 1 1 1
           1 1 1 1 1 1 1 1 1 1   1 1 1 1 1 1 1 1 1 1   1 1 1 1 1 1 1 1 1 1   1 1 1
1 1 1 1 1 1   1 1 1 1 1 1 1 1 1 1
           1 1 1 1 1 1 1 1 1 1   1 1 1 1 1 1 1 1 1 1   1 1 1 1 1 1 1 1 1 1   1 1 1
1 1 1 1 1 1   1 1 1 1 1 1 1 1 1 1
           1 1 1 1 1 1 1 1 1 1   1 1 1 1 1 1 1 1 1 1   1 1 1 1 1 1 1 1 1 1   1 1 1
1 1 1 1 1 1   1 1 1 1 1 1 1 1 1 1
           1 1 1 1 1 1 1 1 1 1   1 1 1 1 1 1 1 1 1 1   1 1 1 1 1 1 1 1 1 1   1 1 1
1 1 1 1 1 1   1 1 1 1 1 1 1 1 1 1
           1 1 1 1 1 1 1 1 1 1   1 1 1 1 1 1 1 1 1 1   1 1 1 1 1 1 1 1 1 1   1 1 1
1 1 1 1 1 1   1 1 1 1 1 1 1 1 1 1
           1 1 1 1 1 1 1 1 1 1   1 1 1 1 1
```

NOTE: METEOROLOGICAL DATA ACTUALLY PROCESSED WILL ALSO DEPEND ON WHAT IS INCLUDED IN THE DATA FILE.

*** UPPER BOUND OF FIRST THROUGH FIFTH WIND SPEED CATEGORIES ***

(METERS/SEC)

1.54, 3.09, 5.14, 8.23, 10.80,

*** AERMOD - VERSION 15181 *** *** P. Kay Metal ***

09/14/16

*** AERMET - VERSION 15181 *** *** ***

15:56:51

PAGE 3

**MODELOPTs: RegDFAULT CONC ELEV NODRYDPLT NOWETDPLT RURAL

*** UP TO THE FIRST 24 HOURS OF METEOROLOGICAL DATA ***

Surface file: AerMet2011_2015.SFC
Met Version: 15181
Profile file: AerMet2011_2015.PFL

Surface format: FREE

Profile format: FREE

Surface station no.: 24149 Upper air station no.: 4106
Name: LEWISTON NEZ PERCE CNTY AP, ID Name: UNKNOWN

Year: 2011 Year: 2011

```
 First 24 hours of scalar data
 YR MO DY JDY HR     H0     U*     W*  DT/DZ ZICNV ZIMCH  M-O LEN    Z0  BOWEN
ALBEDO  REF WS   WD     HT  REF TA     HT
- - - - - - - - - - - - - - - - - - - - - - - - - - - - - - - - - - - - - - - - - - -
- - - - - - - - - - - - - - - - - - - -
 11 01 01   1 01   -7.4  0.088 -9.000 -9.000 -999.   62.      7.9  0.10   0.69
1.00    2.01  158.   10.0  263.1    2.0
 11 01 01   1 02   -7.5  0.089 -9.000 -9.000 -999.   64.      8.1  0.12   0.69
1.00    1.99  101.   10.0  263.1    2.0
 11 01 01   1 03  -29.4  0.254 -9.000 -9.000 -999.  307.     48.3  0.14   0.69
1.00    3.35   80.   10.0  264.2    2.0
 11 01 01   1 04   -7.5  0.088 -9.000 -9.000 -999.   94.      7.9  0.10   0.69
1.00    2.05  130.   10.0  263.1    2.0
 11 01 01   1 05  -10.5  0.105 -9.000 -9.000 -999.   82.      9.6  0.12   0.69
1.00    2.35  112.   10.0  263.8    2.0
 11 01 01   1 06   -3.6  0.061 -9.000 -9.000 -999.   36.      5.5  0.10   0.69
1.00    1.42  143.   10.0  263.1    2.0
 11 01 01   1 07   -3.6  0.061 -9.000 -9.000 -999.   36.      5.5  0.10   0.69
1.00    1.42  135.   10.0  263.1    2.0
 11 01 01   1 08   -1.8  0.045 -9.000 -9.000 -999.   23.      4.3  0.17   0.69
1.00    0.92   56.   10.0  262.0    2.0
 11 01 01   1 09   -1.1  0.038 -9.000 -9.000 -999.   18.      4.2  0.10   0.69
0.54    0.89  121.   10.0  264.9    2.0
 11 01 01   1 10    7.5  0.250  0.163  0.007   20.  300.   -181.7  0.14   0.69
0.40    2.54   89.   10.0  266.4    2.0
 11 01 01   1 11   27.3  0.198  0.385  0.009   72.  212.    -24.7  0.10   0.69
0.35    1.96  137.   10.0  267.0    2.0
 11 01 01   1 12   37.0  0.129  0.488  0.012  108.  112.     -5.0  0.10   0.69
0.33    1.04  134.   10.0  267.5    2.0
 11 01 01   1 13   35.4  0.111  0.538  0.011  152.   89.     -3.4  0.10   0.69
0.33    0.84  126.   10.0  268.8    2.0
 11 01 01   1 14   22.6  0.141  0.495  0.010  185.  127.    -10.7  0.10   0.69
0.36    1.25  155.   10.0  269.2    2.0
 11 01 01   1 15    0.4  0.087  0.130  0.010  186.   62.   -139.8  0.09   0.69
0.43    0.97  187.   10.0  269.2    2.0
 11 01 01   1 16   -1.3  0.039 -9.000 -9.000 -999.   19.      3.9  0.12   0.69
0.61    0.87  108.   10.0  269.2    2.0
 11 01 01   1 17   -8.2  0.095 -9.000 -9.000 -999.   70.      9.0  0.14   0.69
1.00    2.01   85.   10.0  267.5    2.0
 11 01 01   1 18   -8.8  0.097 -9.000 -9.000 -999.   72.      8.9  0.12   0.69
1.00    2.16  104.   10.0  267.5    2.0
 11 01 01   1 19   -5.1  0.074 -9.000 -9.000 -999.   48.      6.8  0.12   0.69
1.00    1.65  119.   10.0  267.0    2.0
 11 01 01   1 20   -1.4  0.039 -9.000 -9.000 -999.   18.      3.5  0.10   0.69
1.00    0.89  167.   10.0  266.4    2.0
 11 01 01   1 21   -3.8  0.064 -9.000 -9.000 -999.   39.      5.9  0.12   0.69
1.00    1.43  108.   10.0  267.5    2.0
```

```
 11 01 01   1 22   -2.4  0.059 -9.000 -9.000 -999.   35.      7.6  0.10   0.69
1.00    1.38  131.   10.0  267.0    2.0
 11 01 01   1 23   -2.1  0.055 -9.000 -9.000 -999.   31.      7.0  0.10   0.69
1.00    1.28  122.   10.0  268.1    2.0
 11 01 01   1 24   -2.1  0.057 -9.000 -9.000 -999.   33.      7.7  0.15   0.69
1.00    1.20  264.   10.0  268.1    2.0


 First hour of profile data
 YR MO DY HR HEIGHT F  WDIR    WSPD AMB_TMP sigmaA  sigmaW  sigmaV
 11 01 01 01   10.0 1  158.    2.01   263.2   99.0  -99.00  -99.00

 F indicates top of profile (=1) or below (=0)
 *** AERMOD - VERSION  15181 ***   *** P. Kay Metal
                          ***        09/14/16
 *** AERMET - VERSION  15181 ***   ***
                       ***        15:56:51

                                   PAGE   4
 **MODELOPTs:   RegDFAULT CONC      ELEV      NODRYDPLT NOWETDPLT RURAL

                                        *** THE SUMMARY OF MAXIMUM PERIOD ( 43824
HRS) RESULTS ***


                                    ** CONC OF CADMIUM  IN MICROGRAMS/M**3
                **


                        NETWORK
GROUP ID                      AVERAGE CONC                RECEPTOR  (XR, YR,
ZELEV, ZHILL, ZFLAG)  OF TYPE  GRID-ID
- - - - - - - - - - - - - - - - - - - - - - - - - - - - - - - - - - - - - - - - -
- - - - - - - - - - - - - - - - - - -

ALL       1ST HIGHEST VALUE IS       0.00000 AT (  497520.00,  5134730.00,
443.82,   446.69,    0.00)  DC
          2ND HIGHEST VALUE IS       0.00000 AT (  497510.00,  5134740.00,
444.09,   444.09,    0.00)  DC
          3RD HIGHEST VALUE IS       0.00000 AT (  497500.00,  5134750.00,
444.25,   444.25,    0.00)  DC
          4TH HIGHEST VALUE IS       0.00000 AT (  497490.00,  5134760.00,
444.56,   446.41,    0.00)  DC
          5TH HIGHEST VALUE IS       0.00000 AT (  497480.00,  5134770.00,
444.95,   444.95,    0.00)  DC
          6TH HIGHEST VALUE IS       0.00000 AT (  497510.00,  5134730.00,
442.93,   446.69,    0.00)  DC
          7TH HIGHEST VALUE IS       0.00000 AT (  497500.00,  5134740.00,
```

```
443.27,   443.50,    0.00)  DC
          8TH HIGHEST VALUE IS       0.00000 AT (  497470.00,  5134780.00,
445.16,   445.16,    0.00)  DC
          9TH HIGHEST VALUE IS       0.00000 AT (  497490.00,  5134750.00,
443.57,   446.41,    0.00)  DC
         10TH HIGHEST VALUE IS       0.00000 AT (  497470.00,  5134770.00,
444.44,   444.44,    0.00)  DC


 *** RECEPTOR TYPES:  GC = GRIDCART
                      GP = GRIDPOLR
                      DC = DISCCART
                      DP = DISCPOLR
 *** AERMOD - VERSION  15181 ***   *** P. Kay Metal
                         ***        09/14/16
 *** AERMET - VERSION  15181 ***   ***
                        ***        15:56:51

                                   PAGE   5
 **MODELOPTs:   RegDFAULT CONC      ELEV      NODRYDPLT NOWETDPLT RURAL

 *** Message Summary : AERMOD Model Execution ***

  --------- Summary of Total Messages --------

 A Total of            0 Fatal Error Message(s)
 A Total of            0 Warning Message(s)
 A Total of          940 Informational Message(s)

 A Total of        43824 Hours Were Processed

 A Total of          430 Calm Hours Identified

 A Total of          510 Missing Hours Identified (  1.16 Percent)


    ******** FATAL ERROR MESSAGES ********
               ***  NONE  ***


    ********   WARNING MESSAGES   ********
               ***  NONE  ***
```

```
↑ *** AERMOD - VERSION  15181 ***   *** P. Kay Metal
                          ***        09/14/16
 *** AERMET - VERSION  15181 ***   ***
                       ***        15:46:32

                                  PAGE   1
 **MODELOPTs:   RegDFAULT CONC      ELEV      NODRYDPLT NOWETDPLT RURAL

                                            ***     MODEL SETUP OPTIONS SUMMARY
  ***
 - - - - - - - - - - - - - - - - - - - - - - - - - - - - - - - - - - - - - - - - -
- - - - - - - - - - - - - - - - - - - - - -

 **Model Is Setup For Calculation of Average CONCentration Values.

   --  DEPOSITION LOGIC  --
 **NO GAS DEPOSITION Data Provided.
 **NO PARTICLE DEPOSITION Data Provided.
 **Model Uses NO DRY DEPLETION.  DRYDPLT  =  F
 **Model Uses NO WET DEPLETION.  WETDPLT  =  F

 **Model Uses RURAL Dispersion Only.

 **Model Uses Regulatory DEFAULT Options:
        1. Stack-tip Downwash.
        2. Model Accounts for ELEVated Terrain Effects.
        3. Use Calms Processing Routine.
        4. Use Missing Data Processing Routine.
        5. No Exponential Decay.

 **Other Options Specified:
        CCVR_Sub - Meteorological data includes CCVR substitutions
        TEMP_Sub - Meteorological data includes TEMP substitutions

 **Model Assumes No FLAGPOLE Receptor Heights.

 **The User Specified a Pollutant Type of:  ARSENIC

 **Model Calculates PERIOD Averages Only

 **This Run Includes:      2 Source(s);       1 Source Group(s); and    9581
Receptor(s)
                with:      2 POINT(s), including
                           0 POINTCAP(s) and      0 POINTHOR(s)
                 and:      0 VOLUME source(s)
                 and:      0 AREA type source(s)
                 and:      0 LINE source(s)
                 and:      0 OPENPIT source(s)
```

```
 **Model Set To Continue RUNning After the Setup Testing.

 **The AERMET Input Meteorological Data Version Date:  15181

 **Output Options Selected:
          Model Outputs Tables of PERIOD Averages by Receptor
          Model Outputs External File(s) of High Values for Plotting (PLOTFILE
Keyword)
          Model Outputs Separate Summary File of High Ranked Values (SUMMFILE
Keyword)

 **NOTE:  The Following Flags May Appear Following CONC Values:  c for Calm Hours
                                                                 m for Missing
Hours
                                                                 b for Both Calm
and Missing Hours

 **Misc. Inputs:  Base Elev. for Pot. Temp. Profile (m MSL) =   436.17 ;  Decay
Coef. =    0.000     ;  Rot. Angle =     0.0
                  Emission Units = GRAMS/SEC                               ;
Emission Rate Unit Factor =   0.10000E+07
                  Output Units   = MICROGRAMS/M**3

 **Approximate Storage Requirements of Model =      3.7 MB of RAM.

 **Input Runstream File:  160914_5yrs_ARSENIC_01.DTA through ..._05.DTA
 **Output Print File:     160914_5yrs_ARSENIC_01.LST through ..._05.LST

 **Detailed Error/Message File:   C:\Beework\PKM\error_01.

 **File for Summary of Results:   C:\Beework\PKM\160914_5yrs_ARSENIC_01.SUM

 *** AERMOD - VERSION  15181 ***   *** P. Kay Metal
                         ***        09/14/16
 *** AERMET - VERSION  15181 ***   ***
                       ***        15:46:32

                                  PAGE   2
 **MODELOPTs:   RegDFAULT CONC      ELEV      NODRYDPLT NOWETDPLT RURAL

                                          *** METEOROLOGICAL DAYS SELECTED FOR
PROCESSING ***
                                                                (1=YES; 0=NO)

            1 1 1 1 1 1 1 1 1 1   1 1 1 1 1 1 1 1 1 1   1 1 1 1 1 1 1 1 1 1   1 1 1
1 1 1 1 1 1 1   1 1 1 1 1 1 1 1 1 1
```

```
           1 1 1 1 1 1 1 1 1 1   1 1 1 1 1 1 1 1 1 1   1 1 1 1 1 1 1 1 1 1   1 1 1
1 1 1 1 1 1   1 1 1 1 1 1 1 1 1 1
           1 1 1 1 1 1 1 1 1 1   1 1 1 1 1 1 1 1 1 1   1 1 1 1 1 1 1 1 1 1   1 1 1
1 1 1 1 1 1   1 1 1 1 1 1 1 1 1 1
           1 1 1 1 1 1 1 1 1 1   1 1 1 1 1 1 1 1 1 1   1 1 1 1 1 1 1 1 1 1   1 1 1
1 1 1 1 1 1   1 1 1 1 1 1 1 1 1 1
           1 1 1 1 1 1 1 1 1 1   1 1 1 1 1 1 1 1 1 1   1 1 1 1 1 1 1 1 1 1   1 1 1
1 1 1 1 1 1   1 1 1 1 1 1 1 1 1 1
           1 1 1 1 1 1 1 1 1 1   1 1 1 1 1 1 1 1 1 1   1 1 1 1 1 1 1 1 1 1   1 1 1
1 1 1 1 1 1   1 1 1 1 1 1 1 1 1 1
           1 1 1 1 1 1 1 1 1 1   1 1 1 1 1 1 1 1 1 1   1 1 1 1 1 1 1 1 1 1   1 1 1
1 1 1 1 1 1   1 1 1 1 1 1 1 1 1 1
           1 1 1 1 1 1 1 1 1 1   1 1 1 1 1
```

NOTE: METEOROLOGICAL DATA ACTUALLY PROCESSED WILL ALSO DEPEND ON WHAT IS INCLUDED IN THE DATA FILE.

*** UPPER BOUND OF FIRST THROUGH FIFTH WIND SPEED CATEGORIES ***

(METERS/SEC)

1.54, 3.09, 5.14, 8.23, 10.80,

*** AERMOD - VERSION 15181 *** *** P. Kay Metal ***
09/14/16
*** AERMET - VERSION 15181 *** ***
15:46:32

PAGE 3

**MODELOPTs: RegDFAULT CONC ELEV NODRYDPLT NOWETDPLT RURAL

*** UP TO THE FIRST 24 HOURS OF METEOROLOGICAL DATA ***

Surface file: AerMet2011_2015.SFC
Met Version: 15181
Profile file: AerMet2011_2015.PFL

Surface format: FREE

Profile format: FREE

Surface station no.: 24149 Upper air station no.: 4106
Name: LEWISTON NEZ PERCE CNTY AP, ID Name: UNKNOWN

Year: 2011 Year: 2011

```
 First 24 hours of scalar data
 YR MO DY JDY HR     H0     U*     W*  DT/DZ ZICNV ZIMCH  M-O LEN    Z0  BOWEN
ALBEDO  REF WS   WD     HT  REF TA     HT
- - - - - - - - - - - - - - - - - - - - - - - - - - - - - - - - - - - - - - - - - - -
- - - - - - - - - - - - - - - - - - - -
 11 01 01   1 01   -7.4  0.088 -9.000 -9.000 -999.   62.      7.9  0.10   0.69
1.00    2.01  158.   10.0  263.1    2.0
 11 01 01   1 02   -7.5  0.089 -9.000 -9.000 -999.   64.      8.1  0.12   0.69
1.00    1.99  101.   10.0  263.1    2.0
 11 01 01   1 03  -29.4  0.254 -9.000 -9.000 -999.  307.     48.3  0.14   0.69
1.00    3.35   80.   10.0  264.2    2.0
 11 01 01   1 04   -7.5  0.088 -9.000 -9.000 -999.   94.      7.9  0.10   0.69
1.00    2.05  130.   10.0  263.1    2.0
 11 01 01   1 05  -10.5  0.105 -9.000 -9.000 -999.   82.      9.6  0.12   0.69
1.00    2.35  112.   10.0  263.8    2.0
 11 01 01   1 06   -3.6  0.061 -9.000 -9.000 -999.   36.      5.5  0.10   0.69
1.00    1.42  143.   10.0  263.1    2.0
 11 01 01   1 07   -3.6  0.061 -9.000 -9.000 -999.   36.      5.5  0.10   0.69
1.00    1.42  135.   10.0  263.1    2.0
 11 01 01   1 08   -1.8  0.045 -9.000 -9.000 -999.   23.      4.3  0.17   0.69
1.00    0.92   56.   10.0  262.0    2.0
 11 01 01   1 09   -1.1  0.038 -9.000 -9.000 -999.   18.      4.2  0.10   0.69
0.54    0.89  121.   10.0  264.9    2.0
 11 01 01   1 10    7.5  0.250  0.163  0.007   20.  300.   -181.7  0.14   0.69
0.40    2.54   89.   10.0  266.4    2.0
 11 01 01   1 11   27.3  0.198  0.385  0.009   72.  212.    -24.7  0.10   0.69
0.35    1.96  137.   10.0  267.0    2.0
 11 01 01   1 12   37.0  0.129  0.488  0.012  108.  112.     -5.0  0.10   0.69
0.33    1.04  134.   10.0  267.5    2.0
 11 01 01   1 13   35.4  0.111  0.538  0.011  152.   89.     -3.4  0.10   0.69
0.33    0.84  126.   10.0  268.8    2.0
 11 01 01   1 14   22.6  0.141  0.495  0.010  185.  127.    -10.7  0.10   0.69
0.36    1.25  155.   10.0  269.2    2.0
 11 01 01   1 15    0.4  0.087  0.130  0.010  186.   62.   -139.8  0.09   0.69
0.43    0.97  187.   10.0  269.2    2.0
 11 01 01   1 16   -1.3  0.039 -9.000 -9.000 -999.   19.      3.9  0.12   0.69
0.61    0.87  108.   10.0  269.2    2.0
 11 01 01   1 17   -8.2  0.095 -9.000 -9.000 -999.   70.      9.0  0.14   0.69
1.00    2.01   85.   10.0  267.5    2.0
 11 01 01   1 18   -8.8  0.097 -9.000 -9.000 -999.   72.      8.9  0.12   0.69
1.00    2.16  104.   10.0  267.5    2.0
 11 01 01   1 19   -5.1  0.074 -9.000 -9.000 -999.   48.      6.8  0.12   0.69
1.00    1.65  119.   10.0  267.0    2.0
 11 01 01   1 20   -1.4  0.039 -9.000 -9.000 -999.   18.      3.5  0.10   0.69
1.00    0.89  167.   10.0  266.4    2.0
 11 01 01   1 21   -3.8  0.064 -9.000 -9.000 -999.   39.      5.9  0.12   0.69
1.00    1.43  108.   10.0  267.5    2.0
```

```
 11 01 01   1 22   -2.4  0.059 -9.000 -9.000 -999.   35.      7.6  0.10   0.69
1.00    1.38  131.   10.0  267.0    2.0
 11 01 01   1 23   -2.1  0.055 -9.000 -9.000 -999.   31.      7.0  0.10   0.69
1.00    1.28  122.   10.0  268.1    2.0
 11 01 01   1 24   -2.1  0.057 -9.000 -9.000 -999.   33.      7.7  0.15   0.69
1.00    1.20  264.   10.0  268.1    2.0


 First hour of profile data
 YR MO DY HR HEIGHT F  WDIR    WSPD AMB_TMP sigmaA  sigmaW  sigmaV
 11 01 01 01   10.0 1  158.    2.01   263.2   99.0  -99.00  -99.00

 F indicates top of profile (=1) or below (=0)
 *** AERMOD - VERSION  15181 ***   *** P. Kay Metal
                          ***        09/14/16
 *** AERMET - VERSION  15181 ***   ***
                       ***        15:46:32

                                   PAGE   4
 **MODELOPTs:   RegDFAULT CONC      ELEV      NODRYDPLT NOWETDPLT RURAL

                                        *** THE SUMMARY OF MAXIMUM PERIOD ( 43824
HRS) RESULTS ***


                                    ** CONC OF ARSENIC  IN MICROGRAMS/M**3
                **


                        NETWORK
GROUP ID                      AVERAGE CONC                RECEPTOR  (XR, YR,
ZELEV, ZHILL, ZFLAG)  OF TYPE  GRID-ID
- - - - - - - - - - - - - - - - - - - - - - - - - - - - - - - - - - - - - - - - -
- - - - - - - - - - - - - - - - - -

ALL       1ST HIGHEST VALUE IS       0.00001 AT (  497470.00,  5134780.00,
445.16,   445.16,    0.00)  DC
          2ND HIGHEST VALUE IS       0.00001 AT (  497480.00,  5134770.00,
444.95,   444.95,    0.00)  DC
          3RD HIGHEST VALUE IS       0.00001 AT (  497460.00,  5134780.00,
444.75,   444.75,    0.00)  DC
          4TH HIGHEST VALUE IS       0.00001 AT (  497460.00,  5134790.00,
445.47,   445.47,    0.00)  DC
          5TH HIGHEST VALUE IS       0.00001 AT (  497470.00,  5134770.00,
444.44,   444.44,    0.00)  DC
          6TH HIGHEST VALUE IS       0.00001 AT (  497490.00,  5134760.00,
444.56,   446.41,    0.00)  DC
          7TH HIGHEST VALUE IS       0.00001 AT (  497450.00,  5134790.00,
```

```
445.19,   445.19,    0.00)  DC
          8TH HIGHEST VALUE IS       0.00001 AT (  497450.00,  5134780.00,
444.41,   444.41,    0.00)  DC
          9TH HIGHEST VALUE IS       0.00001 AT (  497500.00,  5134750.00,
444.25,   444.25,    0.00)  DC
         10TH HIGHEST VALUE IS       0.00001 AT (  497460.00,  5134770.00,
443.93,   443.93,    0.00)  DC


 *** RECEPTOR TYPES:  GC = GRIDCART
                      GP = GRIDPOLR
                      DC = DISCCART
                      DP = DISCPOLR
 *** AERMOD - VERSION  15181 ***   *** P. Kay Metal
                         ***        09/14/16
 *** AERMET - VERSION  15181 ***   ***
                        ***        15:46:32

                                   PAGE   5
 **MODELOPTs:   RegDFAULT CONC      ELEV      NODRYDPLT NOWETDPLT RURAL

 *** Message Summary : AERMOD Model Execution ***

  --------- Summary of Total Messages --------

 A Total of            0 Fatal Error Message(s)
 A Total of            0 Warning Message(s)
 A Total of          940 Informational Message(s)

 A Total of        43824 Hours Were Processed

 A Total of          430 Calm Hours Identified

 A Total of          510 Missing Hours Identified (  1.16 Percent)


    ******** FATAL ERROR MESSAGES ********
               ***  NONE  ***


    ********   WARNING MESSAGES   ********
               ***  NONE  ***
```

Appendix B
Modeling Protocol and DEQ's Conditional Protocol Approval Notice

STATE OF IDAHO
DEPARTMENT OF
ENVIRONMENTAL QUALITY

1410 NORTH HILTON, BOISE, ID 83706 · (208) 373-0502

C. L. "BUTCH" OTTER, GOVERNOR

JOHN TIPPETS, DIRECTOR

August 13, 2016

Beth Hodgeson, Spring Environmental, Inc. (SE)
on behalf of P.Kay Metal, Lewiston, Idaho

Re: Modeling Protocol for P.Kay Metal,LLC

Dear Beth:

DEQ received your dispersion modeling protocol via email on July 15, 2016 on behalf of P.Kay Metal (PKM), located in Lewiston, Idaho. The modeling protocol was submitted by Betsy Speare and Beth Hodgeson of Spring Environmental, Inc. (SE). The modeling protocol proposes methods and data for use in the ambient impact analyses of a Permit to Construct (PTC) application for a new facility. The analyses are needed to demonstrate compliance with ambient air quality standards for issuance of a PTC for the proposed facility. DEQ has the following comments:

- Comment 1: Descriptions of the facility process are generally adequate for the level of a modeling protocol. The ambient air boundary, as stated in the State of Idaho Guideline for Performing Air Quality Impact Analyses, is defined by an area where the public access is legally and practically precluded. This includes separation from areas of habitation or activities by people not employed by the facility. The applicant should provide details to show in some manner how the public is precluded on their property that is not enclosed with fences. Item 4 in the protocol refers to a facility layout and site plan on page 6. This figure appears to be missing in the protocol document.

- Comment 2: Documentation and justification of release parameters must be provided in the application. Refer to Section 3.4.3 of the *State of Idaho Guideline for Performing Air Quality Impact Analyses*, September 2013(http://www.deq.idaho.gov/media/1029/modeling-guideline.pdf). Simply stating that values are "manufacturer data" does not constitute adequate documentation and/or justification. DEQ requests that the application describe how

the values were obtained (measurement, similar source, combustion evaluation, fan curves, etc.). If values were obtained from an equipment/engineering firm, then those forms, specification sheets, etc. provided by the firm should be included in the application as documentation for the values used in the modeling analyses. The application should be treated as a stand-alone document. If values have been taken from previous permit applications or permits, then the data and derivation from those permit applications or permits must be included in the document. If data was taken from a stack test, then the stack test report and data should also be included in the document. Please be sure that the estimates for exhaust flows from the baghouses are in ACFM, and do not reflect fan input. Some of the listed flows for the baghouses appear high, (example: 50 meters/sec for the Refining Kettle Baghouse).

- Comment 3: SE has requested using the latest five years of meteorological data from Lewiston, Idaho. DEQ will supply this data from the period 2011-2015. DEQ agrees that this data is sufficiently representative for use in this modeling analysis.

- Comment 4: SE has listed ambient background concentrations for $PM_{2.5}$ as obtained from NWAIRQUEST. DEQ will provide ambient background concentration data obtained from the NWAIRQUEST tool using the coordinates of the facility for all the criteria pollutants, if needed.

- Comment 5: In the protocol the applicant discusses several emission estimates, and refers to uncontrolled emissions, annual controlled emissions, maximum short term emissions, and normal and maximum operating hours. DEQ reminds SE that modeling applicability- is based on the maximum PTE (Potential To Emit) or permit-allowable emissions of sources at the facility, and the issued permit may include conditions limiting operational hours or emissions as deemed necessary. Emission calculations for all the criteria pollutants need to be documented. It should be noted that review and acceptance of the emission calculations for both criteria pollutants and TAPS, regarding their usage with respect to modeling thresholds, is the responsibility of the assigned permit writer, and DEQ review of such emissions estimates will be performed during DEQ's review of the submitted application. Approval of this protocol cannot be considered as acceptance of emissions calculation methods.

- Comment 6: Usage of emissions quantities with respect to modeling thresholds is normally limited to Level I thresholds. Level II modeling applicability thresholds are accepted on a case by case situation, and discussions with DEQ and approval by DEQ are necessary before any pollutants can be excluded from site-specific analyses on the basis of emissions quantities below Level II thresholds.

- Comment 7: SE states that that NO_X modeling may be required, but does not discuss preferred methodologies to treat chemical transformation from NO_x to NO_2. The applicant can use the default ARM method without prior approval by DEQ. If the applicant desires to use a non- default methodology (such as ARM2), DEQ reminds the applicant that prior

discussion and subsequent approval is needed. If non-default Tier 3 options such as OLM or PVMRM are used, the applicant must also first contact DEQ for prior approval.

- Comment 8: SE provides adequate description of the modeling receptor grid. DEQ reminds the applicant that the density spacing of receptors in the immediate areas of maximum "design" concentrations should be such that DEQ is confident that maximum impacts have been identified at a level where compliance with the applicable standards is highly confident.

- Comment 9: DEQ has recently developed a modeling report template form for consultants/applicants to use when submitting modeling analyses. An electronic copy of this template should have been attached to the email delivering this protocol approval notice. DEQ now **requires** that this template be used for the submitted modeling analyses.

DEQ modeling staff considers the submitted dispersion modeling protocol, with consideration and resolution of the additional items noted above, to be approved. It should be noted, however, that the approval of this modeling protocol is not meant to imply approval of a completed dispersion modeling analysis. Please refer to the *State of Idaho Air Quality Modeling Guideline*, which is available on the Internet at http://www.deq.state.id.us/air/permits_forms/permitting/modeling_guideline.pdf, for further guidance.

DEQ modeling staff requests submission of electronic copies of all modeling input and output files (including BPIP and AERMAP input and output files) with an analysis report. Also, please include with the application materials a copy of the protocol and this protocol approval in the appendix of the application. If you have any questions, please call at 208 373 0220

Sincerely,

Thomas Swain
Analyst 3 , Air Modeling
Idaho Department of Environmental Quality
208 373-0220
thomas.swain@deq.idaho.gov

([1])*State of Idaho Guideline for Performing Air Quality Impact Analyses*, September 2013

AIR QUALITY MODELING PROTOCOL
P. Kay Metal Lewiston, LLC

P. Kay Metal is a new solder manufacturing and lead recycling facility which will be located at 152 Southport Avenue in Lewiston, Idaho. Production, storage, and shipping will take place in one, 46,200 square foot building. The facility will normally operate 24 hours per day, 4 days a week, for 45 weeks a year. The maximum operating hours will be 24 hours per day, 7 days per week for 52 weeks per year.

P. Kay Metal will utilize a single rotary furnace to melt and recycle reclaimed lead into marketable products. The molten lead is refined through a chemical and physical process and is a potential source of toxic and criteria pollutants. The reclaimed materials will be melted in the rotary furnace, continue through refining kettles, and remain in holding kettles until sent to the casting unit. After the casting unit, the metal will be shaped into bars or wires as final products for sale.

Four baghouses designated as the Rotary Furnace Baghouse, Refining Kettle Baghouse, Holding Kettle Room Baghouse, and Fugitive Baghouse act as emissions controls for the facility. Emissions from the rotary furnace are vented to the Rotary Furnace Baghouse. All emissions from the four refining kettle are vented to the Refining Kettle Baghouse. Emissions from the seven holding kettles are vented through the Holding Kettle Room Baghouse. Further emissions from the production area are captured and vented to the Fugitive Baghouse. The lead refining and solder manufacturing processes are estimated to emit Arsenic, Cadmium, Formaldehyde, and Nickel in excess of the Emissions Screening Levels[1] and particulate matter in excess of Level I Thresholds[2]; therefore, modeling is indicated.

1. **Purpose:** To determine the off-site impact of particulate emissions and toxics emissions associated with P. Kay Metal's solder manufacturing in order to obtain a Permit to Construct.

2. **Applicable Regulations and Requirements:** Toxic air pollutant emissions are limited by impact as defined in IDAPA 58.01.01.585 and particulate emissions are limited by impact as defined in 40 CFR 50.6 and 50.7. The applicable levels are included below under Emissions Data.

3. **Model Description:** EPA provides guidance on applicability of specific air quality dispersion models in the review and preparation of new source permits and State Implementation Plans (SIP) revisions. EPA's Guideline of Air Quality Models is documented in Subpart W of 40 CFR Part 51. In accordance with this Guidance, the first approach was to determine whether a conservative estimate using a screening model would be acceptable based on site specific parameters. This facility has four baghouses and 12 refining and storage kettles; therefore, AERMOD is selected for the modeling due to the number and complexity of source points.

4. **Facility Layout:** Refer to the site plan included on page 6.

[1] Defined in IDAPA 58.01.01.585
[2] Idaho Department of Environmental Quality, *State of Idaho Guideline for Preforming Air Quality Impact Analysis,* Table 2 (2013)

5. **Emissions Data:** All air pollutants will be discharged through one of the 4 baghouses. The height of each discharge point will be evaluated and adjusted as necessary to the Good Engineering Practice stack height. All particulate is assumed to have a diameter less than 2.5 microns.

Emissions estimates were calculated based on production rates, AP-42 sections 1.4 and 12.11, and Speciate numbers 2040110 and 2040310.

A summary of criteria and toxic air pollutant emissions can be found in Table 1, Table 2, and Table 3. These tables illustrate that a permit to construct is triggered based on several criteria and toxic pollutants. Modeling is necessary for particulate matter (PM), NO_X, lead, arsenic, cadmium, formaldehyde, and nickel.

Table 1: Criteria Pollutant Emissions Summary (Uncontrolled Emissions)

Source	PM		SO_2		NO_X		CO		VOC		Lead	
	lb/hr	ton/yr	lb/hr	ton/yr	lb/hr	ton/yr	lb/hr	ton/yr	lb/hr	ton/yr	lb/hr	ton/yr
Uncontrolled Emissions												
Rotary Furnace Baghouse	0.825	3.613	0.002	0.010	0.392	1.718	0.329	1.443	0.022	0.094	0.265	1.161
Refining Kettle Baghouse	0.582	2.549	0.006	0.028	1.078	4.724	0.906	3.968	0.059	0.260	0.150	0.657
Holding Kettle Room Baghouse	0.465	2.039	0.007	0.031	1.176	5.153	0.988	4.328	0.065	0.283	0.113	0.494
Fugitive Baghouse	0.876	3.837	0.000	0.000	0.000	0.000	0.000	0.000	0.000	0.000	0.263	1.151
Total	2.748	12.037	0.016	0.070	2.647	11.594	2.224	9.739	0.146	0.638	0.791	3.463
Significant Emission Rate:												
BRC[3]	0.23	1	0.91	4	0.91	4	2.28	10	0.91	4	0.01	0.06
Exceeded	Yes	Yes	No	No	Yes	Yes	No	No	No	No	Yes	Yes

*It is assumed that Total PM=PM_{10}=$PM_{2.5}$. Thresholds correspond to $PM_{2.5}$.

[3] Defined in IDAPA 58.01.01.223

Table 2: Level I and Level II Thresholds (Controlled Emissions)

Source	PM (ton/yr)	Lead (lb/month)
Controlled Emissions		
Rotary Furnace Baghouse	5.78E-02	1.27E-01
Refining Kettle Baghouse	4.08E-02	7.20E-02
Holding Kettle Room Baghouse	1.63E-02	2.71E-02
Fugitive Baghouse	3.07E-02	6.31E-02
Total	0.15	0.29
Modeling Thresholds:		
Tier 1	0.35	14
Tier 2	4.1	
Exceed?	No	No

* It is assumed that Total PM=PM_{10}=$PM_{2.5}$. Thresholds correspond to $PM_{2.5}$.

Table 3: Toxic Air Pollutant Emissions Summary

Pollutant	Emission Rate (lb/hr)	Screening Emission Level (lb/hr)	Exceeds Screening Level? (Y/N)
Aluminum	3.42E-04	0.667	No
Antimony	2.17E-03	3.30E-02	No
Arsenic	6.31E-04	1.50E-06	Yes
Barium	7.98E-04	3.30E-02	No
Benzene	5.56E-05	8.00E-04	No
Beryllium	3.18E-07	2.80E-05	No
Cadmium	1.28E-03	3.70E-06	Yes
Chlorine	2.07E-02	2.00E-01	No
Chromium	1.11E-04	3.30E-02	No
Cobalt	3.69E-06	7.00E-03	No
Copper	3.11E-04	1.30E-02	No
Formaldehyde	1.99E-03	5.10E-04	Yes
Hexane	4.76E-02	1.20E+01	No
Manganese	4.28E-05	6.70E-02	No
Molybdenum	2.91E-05	3.33E-01	No
Naphthalene	1.61E-05	3.33E+00	No
Nickel	2.77E-05	2.70E-05	Yes
Pentane	6.88E-02	1.18E+02	No
Phosphorus	2.46E-04	0.007	No
Selenium	4.67E-05	1.30E-02	No
Silicon	6.82E-04	0.667	No
Tin	2.11E-03	0.133	No
Toluene	9.00E-05	2.50E+01	No
Vanadium	1.01E-06	0.003	No
Zinc	3.12E-04	6.67E-01	No

The worst case emission rates for PM, NO_X, lead, arsenic, cadmium, formaldehyde, and nickel based on the proposed operating schedule and the proposed production limits, are:

- 0.3465 g/s PM
- 0.3335 g/s NO_X
- 0.0176 g/s Lead
- 0.0000795 g/s Arsenic
- 0.00016 g/s Cadmium
- 0.000251 g/s Formaldehyde
- 0.00000349 g/s Nickel

6. **Stack Parameters:**

Table 4: AERMOD Stack Parameters

	Rotary Furnace Baghouse	Refining Kettle Baghouse	Holding Kettle Room Baghouse	Fugitive Baghouse
Source Type	Point	Point	Point	Point
Stack Height (ft)	25.0	6.0	6.0	6.0
Stack Diameter (in)	38	30	30	30
Stack Flowrate (cfm)	40,000	48,800	30,000	20,000
Stack Velocity (ft/sec)	84.65	165.69	101.86	67.91
Stack Temperature (ºF)	1500	315	315	315

7. **Receptor Network:** AERMAP will be used to develop a receptor grid with elevated receptors to account for the varied terrain in the surrounding area. The receptor grid will be sufficiently narrow to provide an appropriate representation of dispersion characteristics, with 20-meter spacing for the first 100 meters, then 250-meter increments to 3,000 meters, then 750-meter increments to 10,000 meters, then 1250-meter increments to 30,000 meters, and then 2000-meter increments to 50,000 meters. More receptors can be added as needed to areas with maximum "design" concentrations.

The ambient air boundary is the plant boundary. The plot plan showing the plant boundary will be used for the ambient air boundary. We base this conclusion on:

- The area is general industrial and away from the proximity of human habitation or activities; and
- The general public is not invited onto the plant site as a normal part of the business operation.

8. **Elevation Data:** The terrain immediately surrounding the source has a gentle elevation drop in all directions except for the east, where the elevation slowly rises. A stream runs to the north, south, and west of the plant. There is a mix of hilly and flat terrain within a 5 kilometer radius of the source. AERMAP will be used to extract elevation data for AERMOD given the complex terrain surrounding the facility.

9. **Meteorological Data:** Five-year meteorological data (2011-2015) for Lewiston-Nez Perce County Airport station ID 24149 will be used for surface data. The nearest upper air station is located in Spokane at the Spokane International Airport site ID 04106. Data was obtained through the National Oceanic and Atmospheric Administration (NOAA) based on the years of interest and the two site IDs.

10. **Land Use Classification:** Some of the immediate area is developed including some multi-family residential, commercial, and industrial land-uses, but more than 50% of the surrounding area within a 3-km radius of the site is other than industrial, commercial, or multi-family

residential. Therefore, the land-use classification as Rural in accordance with EPA[4] and Idaho DEQ[5] guidelines.

11. **Background Concentrations:** Background concentrations of particulate matter were found using the North West AIRQUEST tool, at http://lar.wsu.edu/nw-airquest/lookup.html. The 24-hr background concentrations $PM_{2.5}$ is 20 µg/m³. The annual background concentration of $PM_{2.5}$ is 6.4 µg/m³. There were no available background concentrations for the toxic pollutants.

12. **Evaluation of Compliance with Standards:**

A) PTC Required – P. Kay Metal's controlled potential emissions will exceed permit thresholds and screening levels for PM, NO_X, Lead, Arsenic, Cadmium, Formaldehyde, and Nickel. Therefore, a permit to construct is required.

B) Major Source Threshold – The potential emissions of each criteria pollutant do not exceed the "Significant Emissions Rate" (State of Idaho – Air Quality Modeling Guideline, Table 6. P. Kay Metal is not expected to exceed the "Significant Emissions Rate" for any criteria pollutant and as such would not be a major source under PSD.

C) Modeling Threshold – P. Kay Metals is estimated to exceed the Emissions Screening Levels (IDAPA 58.01.01.585) for Arsenic, Cadmium, Formaldehyde, and Nickel. PM, NO_X, and Lead are estimated to exceed the Significant Emissions Rates[6]

D) Preliminary Analysis – The modeling will be conducted as described above and compared to the National Ambient Air Quality Standards (NAAQS) or to the "Acceptable Ambient Concentration" (IDAPA 58.01.01.585) as applicable to demonstrate compliance.

This Air Quality Modeling Protocol was prepared by Betsy Speare, E.I.T. under the direction of Beth Fifield Hodgson, P.E. of Spring Environmental, Inc.

Spring Environmental Inc.
1011 N. Cedar Street
Spokane, WA 99201-1914
Tel:(509) 328-7500
Fax: (509) 328-7501

[4] 40 C.F.R. §51 Appendix W, Section 7.2.3
[5] Idaho Department of Environmental Quality, *State of Idaho Guideline for Preforming Air Quality Impact Analysis* p. 48 (2013)
[6] Idaho Department of Environmental Quality, *State of Idaho Guideline for Preforming Air Quality Impact Analysis*, Table 6 (2013)

Attachment #4

Scaled Plot Plan

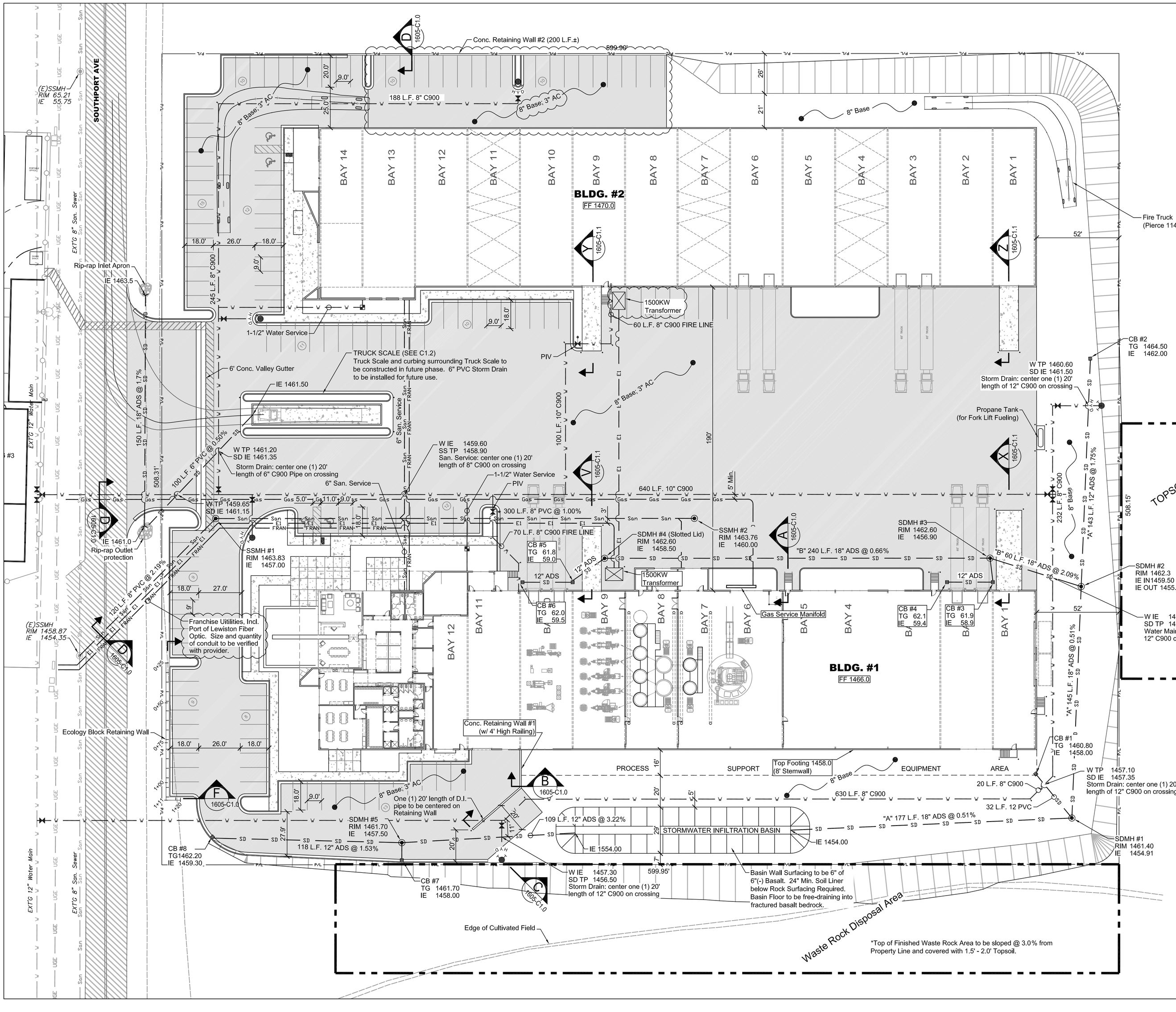

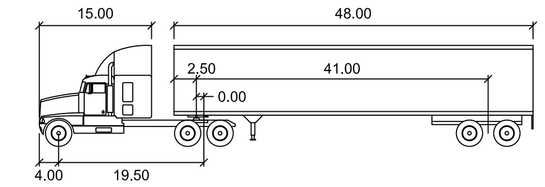

WB-62 feet

Tractor Width	: 8.00	Lock to Lock Time	: 6.0
Trailer Width	: 8.50	Steering Angle	: 28.4
Tractor Track	: 8.00	Articulating Angle	: 70.0
Trailer Track	: 8.50		

Typical Tractor-Trailer Configuration

REV LTR	DATE	REVISION DESCRIPTION	CHECKED	APPD.
B	04-22-16	Revised as per City Review Comments dated	JSH	
C	04-27-16	Add. 19 Parking Stalls adjacent to Bldg. #2		
D	05-06-16	Add. A.C. Paving behind Bldg. #2		

ENGINEER • LAND SURVEYOR • PROFESSIONAL • REGISTERED • #21102 • STATE OF IDAHO • JOHN S. HAMMOND • 3/25/16

SCALE 1"=30'	SHEET SIZE D		
DRAWN BY MEE	CHECKED BY JSH		
DATE 03-25-16	JOB # 1605		
SHEET C4.0			
DRAWING # 1605-C4.0			

P-KAY METAL - SOUTHPORT PROJECT
SITE DEVELOPMENT PLAN
SOUTHPORT AVENUE
LEWISTON, IDAHO

HEDCO
HAMMOND ENGINEERING & DEVELOPMENT CO.
528 BRYDEN AVENUE LEWISTON, IDAHO 83501
(208) 798-5422

SHEET
C4.0

Sequence: c4, 2016
Attachment 4-1
P. Kay metal, Lewiston
Permit to Construct

Attachment #5

Schedule for Construction

Construction Schedule

Task	Start Date	End Date
Building Construction	September 26, 2016	February 29, 2017
Permit Application	September 28, 2016	February 29, 2017
Equipment Construction	November 2016	March 2017
Hiring and Building Touch-ups	March 2017	May 2017
Begin operations	May 2017	NA

Attachment #6

Regulatory Review

IDAHO ADMINISTRATIVE PROCEDURES ACT 58.01.01
Rules for the Control of Air Pollution in Idaho

123. CERTIFICATION OF DOCUMENTS

P. Kay Metal agrees that all documents submitted to the DEQ will contain certification by a responsible official.

210. DEMONSTRATION OF PRECONSTRUCTION COMPLIANCE WITH TOXIC STANDARDS

Toxic pollutants are calculated in the emissions inventory and quantities from each source as well as total quantities are listed in the emissions summary. Arsenic, cadmium, and formaldehyde are the only toxics to exceed their respective emission screening level. These three toxics were modeled using AERMOD in order to demonstrate compliance. Results can be found in the modeling report.

577. AMBIENT AIR QUALITY STANDARDS FOR SPECIFIC AIR POLLUTANTS

This standard does not apply to P. Kay Metal since fluorides will not be emitted as part of P. Kay Metal's process.

585. TOXIC AIR POLLUTANTS NON-CARCINOGENIC INCREMENTS

P. Kay Metal acknowledges the screening emissions levels (EL) and acceptable ambient concentrations (AACs) for non-carcinogens as listed. Toxic emissions were compared to these ELs, and all non-carcinogenic emissions were below their corresponding EL.

586. TOXIC AIR POLLUTANTS CARCINOGENIC INCREMENTS

P. Kay Metal acknowledges the ELs and acceptable ambient concentrations for carcinogens (AACCs) as listed. Toxic emissions were compared to these ELs and all but three carcinogenic emissions were below their corresponding EL. The three toxic carcinogens that exceeded the EL were demonstrated to be below the corresponding AACC using AERMOD.

590. NEW SOURCE PREFORMANCE STANDARDS

P. Kay Metal acknowledges the New Source Performance Standards and will comply with 40 CFR Part 60 as applicable.

591. NATIONAL EMISSION STANDARDS FOR HAZARDOUS AIR POLLUTANTS

P. Kay Metal acknowledges the National Emission Standards for Hazardous Pollutants and will comply with 40 CFR Part 61 and 40 CFR Part 63 as applicable.

625. VISIBLE EMISSIONS

P. Kay Metal acknowledges the conditions of this section as well as the test methods and procedures.

650. RULES FOR THE CONTROL OF FUGITIVE DUST

P. Kay Metal will take reasonable precautions to prevent particulate matter from becoming airborne per Section651. P. Kay Metal is not associated with agricultural activities (section 652).

675. FUEL BURNING EQUIPMENT – PARTICULATE MATTER

Fuel Burning Equipment	PM Standard	IDAPA 58.01.01 Citation	Control Device	Compliance Demonstration
Rotary Furnace	0.015 gr/dscf @ 3% O_2	§676	Rotary Baghouse	2.72E-6
Refining Kettle	0.015 gr/dscf @ 3% O_2	§676	Rotary Baghouse	1.05E-5
Alloying Kettle	0.015 gr/dscf @ 3% O_2	§676	Kettle Room Baghouse	2.85E-5
Holding Kettle	0.015 gr/dscf @ 3% O_2	§676	Kettle Room Baghouse	2.026E-5
Extruder	0.015 gr/dscf @ 3% O_2	§676	NA	5.85E-3

676. STANDARDS FOR NEW SOURCES

See section 675 above.

700. PARTICULATE MATTER – PROCESS WEIGHT LIMITATIONS

Particulate matter from all sources combined with worst-case operations total 1.78 pounds per hour of particulate as seen in the emissions summary. This is well below the limits in section 701.

40 CFR 60, Subpart L
Standards of Performance for Secondary Lead Smelters

§60.120 Applicability and designation of affected facility.

(a) The provisions of this subpart are applicable to the following affected facilities in secondary lead smelters: Pot furnaces of more than 250 kg (550 lb) charging capacity, blast (cupola) furnaces, and reverberatory furnaces.

(b) Any facility under paragraph (a) of this section that commences construction or modification after June 11, 1973, is subject to the requirements of this subpart.

This standard is applicable to P. Kay Metal because the kettles are used for melting lead containing material.

[42 FR 37937, July 25, 1977]

§60.121 Definitions.

As used in this subpart, all terms not defined herein shall have the meaning given them in the Act and in subpart A of this part.

(a) *Reverberatory furnace* includes the following types of reverberatory furnaces: stationary, rotating, rocking, and tilting.

(b) *Secondary lead smelter* means any facility producing lead from a leadbearing scrap material by smelting to the metallic form.

(c) *Lead* means elemental lead or alloys in which the predominant component is lead.

(d) *Blast furnace* means any furnace used to recover metal from slag.

[39 FR 9317, Mar. 8, 1974; 39 FR 13776, Apr. 17, 1974, as amended at 65 FR 61756, Oct. 17, 2000]

§60.122 Standard for particulate matter.

(a) On and after the date on which the performance test required to be conducted by §60.8 is completed, no owner or operator subject to the provisions of this subpart shall discharge or cause the discharge into the atmosphere from a blast (cupola) or reverberatory furnace any gases which:

(1) Contain particulate matter in excess of 50 mg/dscm (0.022 gr/dscf).

(2) Exhibit 20 percent opacity or greater.

Superseded by IDAPA 58.01.01 Section 625 and IDAPA 58.01.01 Section 676.

(b) On and after the date on which the performance test required to be conducted by §60.8 is completed, no owner or operator subject to the provisions of this subpart shall discharge or cause the discharge into the atmosphere from any pot furnace any gases which exhibit 10 percent opacity or greater.

P. Kay Metal acknowledges the opacity standard for 60.122(b)

[39 FR 9317, Mar. 8, 1974, as amended at 40 FR 46259, Oct. 6, 1975]

§60.123 Test methods and procedures.

(a) In conducting the performance tests required in §60.8, the owner or operator shall use as reference methods and procedures the test methods in appendix A of this part or other methods and procedures as specified in this section, except as provided in §60.8(b).

(b) The owner or operator shall determine compliance with the particulate matter standards in §60.122 as follows:

(1) Method 5 shall be used to determine the particulate matter concentration during representative periods of furnace operation, including charging and tapping. The sampling time and sample volume for each run shall be at least 60 minutes and 0.90 dscm (31.8 dscf).

(2) Method 9 and the procedures in §60.11 shall be used to determine opacity.

P. Kay Metal acknowledges the prescribed test methods.

[54 FR 6667, Feb. 14, 1989]

40 CFR 63, Subpart X
National Emission Standards for Hazardous Air Pollutants from Secondary Lead Smelting

§63.541 Applicability.

(a) You are subject to this subpart if you own or operate any of the following affected sources at a secondary lead smelter: Blast, reverberatory, rotary, and electric furnaces; refining kettles; agglomerating furnaces; dryers; process fugitive emissions sources; buildings containing lead bearing materials; and fugitive dust sources. The provisions of this subpart do not apply to primary lead processors, lead refiners, or lead remelters.

(b) Table 1 to this subpart specifies the provisions of subpart A of this part that apply to owners and operators of secondary lead smelters subject to this subpart.

(c) If you are subject to the provisions of this subpart, you are also subject to title V permitting requirements under 40 CFR parts 70 or 71, as applicable.

(d) Emissions standards in this subpart apply at all times.

Subpart X is not applicable to P. Kay Metal because they are classified as a lead refiner rather than a secondary lead smelter. P. Kay Metal also does not operate any furnace over 980 Celsius.

§63.542 Definitions.

Terms used in this subpart are defined in the Clean Air Act, in subpart A of this part, or in this section as follows:

Affected source means any of the following sources at a secondary lead smelter: Blast, reverberatory, rotary, and electric furnaces; refining kettles; agglomerating furnaces; dryers; process fugitive emissions sources; buildings containing lead bearing materials; and fugitive dust sources.

Affirmative defense means, in the context of an enforcement proceeding, a response or defense put forward by a defendant, regarding which the defendant has the burden of proof, and the merits of which are independently and objectively evaluated in a judicial or administrative proceeding.

Agglomerating furnace means a furnace used to melt into a solid mass flue dust that is collected from a baghouse.

Bag leak detection system means an instrument that is capable of monitoring particulate matter (dust) loadings in the exhaust of a baghouse in order to detect bag failures. A bag leak detection system includes, but is not limited to, an instrument that operates on triboelectric, light scattering, transmittance or other effect to monitor relative particulate matter loadings.

Battery breaking area means the plant location at which lead-acid batteries are broken, crushed, or disassembled and separated into components.

Blast furnace means a smelting furnace consisting of a vertical cylinder atop a crucible, into which lead-bearing charge materials are introduced at the top of the furnace and combustion air is introduced through tuyeres at the bottom of the cylinder, and that uses coke as a fuel source and that is operated at such a temperature in the combustion zone (greater than 980 Celsius) that lead compounds are chemically reduced to elemental lead metal.

Blast furnace charging location means the physical opening through which raw materials are introduced into a blast furnace.

Collocated blast furnace and reverberatory furnace means operation at the same location of a blast furnace and a reverberatory furnace where the vent streams of the furnaces are mixed before cooling, with the volumetric flow rate discharged from the blast furnace being equal to or less than that discharged from the reverberatory furnace.

Dryer means a chamber that is heated and that is used to remove moisture from lead-bearing materials before they are charged to a smelting furnace.

Dryer transition equipment means the junction between a dryer and the charge hopper or conveyor, or the junction between the dryer and the smelting furnace feed chute or hopper located at the ends of the dryer.

Electric furnace means a smelting furnace consisting of a vessel into which reverberatory furnace slag is introduced and that uses electrical energy to heat the reverberatory furnace slag to such a temperature (greater than 980 Celsius) that lead compounds are reduced to elemental lead metal.

Fugitive dust source means a stationary source of hazardous air pollutant emissions at a secondary lead smelter that is not associated with a specific process or process fugitive vent or stack. Fugitive dust sources include, but are not limited to, roadways, storage piles, lead bearing material handling transfer points, lead bearing material transport areas, lead bearing material storage areas, other lead bearing material process areas, and buildings.

Furnace and refining/casting area means any area of a secondary lead smelter in which:

(1) Smelting furnaces are located;

(2) Refining operations occur; or

(3) Casting operations occur.

Lead alloy means an alloy in which the predominant component is lead.

Lead bearing material means material with a lead content equal to or greater than 5 mg/l as measured by EPA Method 1311 (Under Method 1311, only materials with at least 100 ppm lead will be considered to be lead bearing).

Leeward wall means the furthest exterior wall of a total enclosure that is opposite the windward wall.

Maintenance activity means any of the following routine maintenance and repair activities that could generate fugitive lead dust:

(1) Replacement or repair of refractory, or any internal or external part of equipment used to process, handle or control lead-containing materials.

(2) Replacement of any duct section used to convey lead-containing exhaust.

(3) Metal cutting or welding that penetrates the metal structure of any equipment, and its associated components, used to process lead-containing material such that lead dust within the internal structure or its components can become fugitive lead dust.

(4) Resurfacing, repair or removal of ground, pavement, concrete, or asphalt.

Materials storage and handling area means any area of a secondary lead smelter in which lead-bearing materials (including, but not limited to, broken battery components, reverberatory furnace slag, flue dust, and dross) are stored or handled between process steps including, but not limited to, areas in which materials are stored in open piles, bins, or tubs, and areas in which material is prepared for charging to a smelting furnace.

Natural draft opening means any permanent opening in an enclosure that remains open during operation of the facility and is not connected to a duct in which a fan is installed.

New source means any affected source at a secondary lead smelting facility the construction or reconstruction of which is commenced after May 19, 2011. A building that is constructed for the purpose of controlling fugitive emissions from an existing source is not considered to be a new source.

Partial enclosure means a structure comprised of walls or partitions on at least three sides or three-quarters of the perimeter surrounding stored materials or process equipment to prevent the entrainment of particulate matter into the air.

Pavement cleaning means the use of vacuum equipment, water sprays, or a combination thereof to remove dust or other accumulated material from the paved areas of a secondary lead smelter.

Plant roadway means any area of a secondary lead smelter outside of a total enclosure that is subject to vehicle traffic, including traffic by forklifts, front-end loaders, or vehicles carrying whole batteries or cast lead ingots. Excluded from this definition are employee and visitor parking areas, provided they are not subject to traffic by vehicles carrying lead-bearing materials.

Pressurized dryer breaching seal means a seal system connecting the dryer transition pieces which is maintained at a higher pressure than the inside of the dryer.

Process fugitive emissions source means a source of hazardous air pollutant emissions at a secondary lead smelter that is associated with lead smelting or refining, but is not the primary exhaust stream from a smelting furnace, and is not a fugitive dust source. Process fugitive emissions sources include, but are not limited to, smelting furnace charging points, smelting furnace lead and slag taps, refining kettles, agglomerating furnaces, and drying kiln transition pieces.

Process vent means furnace vents, dryer vents, agglomeration furnace vents, vents from battery breakers, vents from buildings containing lead bearing material, and any ventilation system controlling lead emissions.

Refining kettle means an open-top vessel that is constructed of cast iron or steel and is indirectly heated from below and contains molten lead for the purpose of refining and alloying the lead. Included are pot furnaces, receiving kettles, and holding kettles.

Reverberatory furnace means a refractory-lined furnace that uses one or more flames to heat the walls and roof of the furnace and lead-bearing scrap to such a temperature (greater than 980 Celsius) that lead compounds are chemically reduced to elemental lead metal.

Rotary furnace (also known as a rotary reverberatory furnace) means a furnace consisting of a refractory-lined chamber that rotates about a horizontal axis and that uses one or more flames to heat the walls of the furnace and lead-bearing scrap to such a temperature (greater than 980 Celsius) that lead compounds are chemically reduced to elemental lead metal.

Secondary lead smelter means any facility at which lead-bearing scrap material, primarily, but not limited to, lead-acid batteries, is recycled into elemental lead or lead alloys by smelting.

Shutdown means the period when no lead bearing materials are being fed to the furnace and smelting operations have ceased during which the furnace is cooled from steady-state operating temperature to ambient temperature.

Smelting means the chemical reduction of lead compounds to elemental lead or lead alloys through processing in high-temperature (greater than 980 Celsius) furnaces including, but not limited to, blast furnaces, reverberatory furnaces, rotary furnaces, and electric furnaces.

Startup means the period when no led bearing materials have been fed to the furnace and smelting operations have not yet commenced during which the furnace is heated from ambient temperature to steady-state operating temperature.

Total enclosure means a containment building that is completely enclosed with a floor, walls, and a roof to prevent exposure to the elements and to assure containment of lead bearing material with limited openings to allow access and egress for people and vehicles. The total enclosure must provide an effective barrier against fugitive dust emissions such that the direction of air flow through any openings is inward and the enclosure is maintained under constant negative pressure.

Vehicle wash means a device for removing dust and other accumulated material from the wheels, body, and underside of a vehicle to prevent the inadvertent transfer of lead contaminated material to another area of a secondary lead smelter or to public roadways.

Wet suppression means the use of water, water combined with a chemical surfactant, or a chemical binding agent to prevent the entrainment of dust into the air from fugitive dust sources.

Windward wall means the exterior wall of a total enclosure that is most impacted by the wind in its most prevailing direction determined by a wind rose using available data from the closest representative meteorological station. When openings into enclosures are not impacted by ambient wind due to the enclosure being part of a larger structure, the owner or operator may designate which wall of the enclosure to define as the windward wall.

[77 FR 580, Jan. 5, 2012, as amended at 79 FR 371, Jan. 3, 2014]

§63.543 What are my standards for process vents?

(a) For existing sources, you must maintain the concentration of lead compounds in any process vent gas at or below 1.0 milligrams of lead per dry standard cubic meter (0.00043 grains of lead per dry standard cubic foot). You must maintain the flow-weighted average concentration of lead compounds in vent gases from a secondary lead smelting facility at or below 0.20 milligrams of lead per dry standard cubic meter (0.000087 grains of lead per dry standard cubic foot).

(1) You must demonstrate compliance with the flow weighted average emissions limit on a 12-month rolling average basis, calculated monthly using the most recent test data available.

(2) Until 12 monthly weighted average emissions rates have been accumulated, calculate only the monthly average weighted emissions rate.

(3) You must use Equation 1 of this section to calculate the flow-weighted average concentration of lead compounds from process vents:

$$C_{FWA} = \frac{\sum_{i=1}^{n} F_i \times C_i}{\sum_{i}^{n} F_i} \quad \text{(Eq. 1)}$$

View or download PDF

Where:

C_{FWA} = Flow-weighted average concentration of all process vents.

n = Number of process vents.

F_i = Flow rate from process vent *i* in dry standard cubic feet per minute, as measured during the most recent compliance test.

C_i = Concentration of lead in process vent *i*, as measured during the most recent compliance test.

(4) Each month, you must use the concentration of lead and flow rate obtained during the most recent compliance test performed prior to or during that month to perform the calculation using Equation 1 of this section.

(5) If a continuous emissions monitoring system (CEMS) is used to measure the concentration of lead in a vent, the monthly average lead concentration and monthly average flow rate must be used rather than the most recent compliance test data.

(b) For new sources that begin construction or reconstruction after May 19, 2011 you must maintain the concentration of lead compounds in any process vent gas at or below 0.20 milligrams of lead per dry standard cubic meter (0.000087 grains of lead per dry standard cubic foot).

(c) You must meet the applicable emissions limits for total hydrocarbons and dioxins and furans from furnace sources specified in Table 2 of this subpart. There are no standards for dioxins and furans during periods of startup and shutdown.

(d) If you combine furnace emissions from multiple types of furnaces and these furnaces do not meet the definition of collocated blast and reverberatory furnaces, you must calculate your emissions limit for the combined furnace stream using Equation 2 of this section.

$$C_{EL} = \frac{\sum_{i=1}^{n} F_i \times C_{ELi}}{\sum_{i}^{n} F_i} \quad \text{(Eq. 2)}$$

View or download PDF

Where:

C_{EL} = Flow-weighted average emissions limit (concentration) of combined furnace vents.

n = Number of furnace vents.

F_i = Flow rate from furnace vent i in dry standard cubic feet per minute.

C_{Eli} = Emissions limit (concentration) of pollutant in furnace vent i as specified in Table 2 of this subpart.

(e) If you combine furnace emissions with the furnace charging process fugitive emissions and discharge them to the atmosphere through a common emissions point, you must demonstrate compliance with the applicable total hydrocarbons concentration limit specified in paragraph (c)

of this section at a location downstream from the point at which the two emissions streams are combined.

(f) If you do not combine the furnace charging process fugitive emissions with the furnace process emissions, and discharge such emissions to the atmosphere through separate emissions points, you must maintain the total hydrocarbons concentration in the exhaust gas at or below 20 parts per million by volume, expressed as propane.

(g) Following the initial performance or compliance test to demonstrate compliance with the lead emissions limits specified in paragraph (a) or (b) of this section, you must conduct performance tests according to the schedule in paragraph (g)(1) or (2) of this section.

(1) Conduct an annual performance test for lead compounds from each process vent (no later than 12 calendar months following the previous compliance test), unless you install and operate a CEMS meeting the requirements of §63.8.

(2) If an annual compliance test demonstrates that a process vent emitted lead compounds at 0.10 milligram of lead per dry standard cubic meter or less during the time of the annual compliance test, you may submit a written request to the Administrator applying for an extension of up to 24 calendar months from the previous compliance test to conduct the next compliance test for lead compounds.

(h) Following the initial performance or compliance test to demonstrate compliance with the total hydrocarbons emissions limits in paragraphs (c) and (f) of this section, you must conduct an annual performance test for total hydrocarbons emissions from each process vent that has established limits for total hydrocarbons (no later than 12 calendar months following the previous compliance test), unless you install and operate a CEMS meeting the requirements of §63.8. If an annual compliance test demonstrates that a process vent emitted total hydrocarbons at less than 50 percent of the allowable limit during the time of the annual compliance test, you may submit a written request to the Administrator applying for an extension of up to 24 calendar months from the previous compliance test to conduct the next compliance test for total hydrocarbons.

(i) Following the initial performance or compliance test to demonstrate compliance with the dioxins and furans emissions limits specified in paragraph (c) of this section, you must conduct a performance test for dioxins and furans emissions from each process vent that has established limits for dioxins and furans at least once every 6 years following the previous compliance test.

(j) You must conduct the performance tests specified in paragraphs (g) through (i) of this section under maximum representative operating conditions for the process. During the performance test, you may operate the control device at maximum or minimum representative operating conditions for monitored control device parameters, whichever results in lower emission reduction. Upon request, you must make available to the Administrator such records as may be necessary to determine the conditions of performance tests.

(k) At all times, you must operate and maintain any affected source, including associated air pollution control equipment and monitoring equipment, in a manner consistent with safety and good air pollution control practices for minimizing emissions. Determination of whether such operation and maintenance procedures are being used will be based on information available to the Administrator that may include, but is not limited to, monitoring results, review of operation and maintenance procedures, review of operation and maintenance records, and inspection of the source.

(l) If you own or operate a unit subject to emission limits in Table 2 of this subpart, you must minimize the unit's startup and shutdown periods following the manufacturer's recommended procedures, if available. You must develop and follow standard operating procedures designed to minimize emissions of total hydrocarbon for each startup or shutdown scenario anticipated. You must submit a signed statement in the Notification of Compliance Status report that indicates that you conducted startups and shutdowns according to the manufacturer's recommended procedures, if available, and the standard operating procedures designed to minimize emissions of total hydrocarbons.

(m) In addition to complying with the applicable emissions limits for dioxins and furans listed in Table 2 to this subpart, you must operate a process to separate plastic battery casing materials from all automotive batteries prior to introducing feed into a furnace.

[77 FR 580, Jan. 5, 2012, as amended at 79 FR 371, Jan. 3, 2014]

§63.544 What are my total enclosure standards?

(a) You must operate the process fugitive emissions sources and fugitive dust sources listed in paragraphs (a)(1) through (9) of this section in a total enclosure that is maintained at negative pressure at all times and vented to a control device designed to capture lead particulate. The total enclosure must meet the requirements specified in paragraph (c) of this section.

(1) Smelting furnaces.

(2) Smelting furnace charging areas.

(3) Lead taps, slag taps, and molds during tapping.

(4) Battery breakers.

(5) Refining kettles, casting areas.

(6) Dryers.

(7) Agglomerating furnaces and agglomerating furnace product taps.

(8) Material handling areas for any lead bearing materials except those listed in paragraph (b) of this section.

(9) Areas where dust from fabric filters, sweepings or used fabric filters are processed.

(b) Total enclosures are not required in the following areas: lead ingot product handling areas, stormwater and wastewater treatment areas, intact battery storage areas, areas where lead bearing material is stored in closed containers or enclosed mechanical conveyors, and areas where clean battery casing material is handled.

(c) You must construct and operate total enclosures for the sources listed in paragraph (a) of this section as specified in paragraphs (c)(1) through (3) of this section. The total enclosure must be free of significant cracks, gaps, corrosion or other deterioration that could cause lead bearing material to be released from the primary barrier. Measures must be in place to prevent the tracking of lead bearing material out of the unit by personnel or by equipment used in handling the material. An area must be designated to decontaminate equipment and any rinsate must be collected and properly managed.

(1) You must ventilate the total enclosure continuously to ensure negative pressure values of at least 0.013 mm of mercury (0.007 inches of water).

(2) You must maintain an inward flow of air through all natural draft openings.

(3) If areas that contain one or more sources listed in paragraphs (a)(1) through (9) of this section are enclosed within a larger building that also meets the definition of a total enclosure under §63.542, the requirements of paragraphs (c)(1) and (2) shall be monitored pursuant to §63.548(k) at only one leeward, one windward and one additional wall of the outermost portion of the larger totally enclosed building rather than each individual area within the building.

(d) You must inspect enclosures and facility structures that contain any lead-bearing materials at least once per month. You must repair any gaps, breaks, separations, leak points or other possible routes for emissions of lead to the atmosphere within one week of identification unless you obtain approval for an extension from the Administrator before the repair period is exceeded.

[77 FR 580, Jan. 5, 2012, as amended at 79 FR 371, Jan. 3, 2014]

§63.545 What are my standards for fugitive dust sources?

(a) You must prepare, and at all times operate according to, a standard operating procedures manual that describes in detail the measures that will be put in place and implemented to control the fugitive dust emissions from the sources listed in paragraphs (a)(1) through (7) of this section.

(1) Plant roadways.

(2) Plant buildings.

(3) Accidental releases.

(4) Battery storage area.

(5) Equipment maintenance.

(6) Material storage areas.

(7) Material handling areas.

(b) You must submit the standard operating procedures manual to the Administrator or delegated authority for review and approval when initially developed and any time changes are made.

(c) The controls specified in the standard operating procedures manual must at a minimum include the requirements specified in paragraphs (c)(1) through (7) of this section.

(1) *Cleaning.* Where a cleaning practice is specified, you must clean by wet wash or a vacuum equipped with a filter rated by the manufacturer to achieve 99.97 percent capture efficiency for 0.3 micron particles in a manner that does not generate fugitive lead dust.

(2) *Plant roadways and paved areas.* You must pave all areas subject to vehicle traffic and you must clean the pavement twice per day, except on days when natural precipitation makes cleaning unnecessary or when sand or a similar material has been spread on plant roadways to provide traction on ice or snow. Limited access and limited use roadways such as unpaved roads to remote locations on the property may be exempt from this requirement if they are used infrequently (no more than one round trip per day).

(3) *Accidental releases.* You must initiate cleaning of all affected areas within one hour after detection of any accidental release of lead dust that exceeds 10 pounds (the Comprehensive Environmental Response, Compensation, and Liability Act (CERCLA) reportable quantity for lead at 40 CFR 302.4).

(4) *Battery storage areas.* You must inspect any batteries that are not stored in a total enclosure once each week and move any broken batteries to an enclosure within 72 hours of identification. You must clean residue from broken batteries within 72 hours of identification.

(5) *Materials storage and handling areas.* You must wash each vehicle at each exit of the material storage and handling areas. The vehicle wash must include washing of tires, undercarriage and exterior surface of the vehicle followed by vehicle inspection.

(6) *Equipment maintenance.* You must perform all maintenance activities that could generate lead dust in a manner that minimizes emissions of fugitive dust. This must include one or more of the following:

(i) Performing maintenance inside a total permanent enclosure maintained at negative pressure.

(ii) Performing maintenance inside a temporary enclosure and use a vacuum system either equipped with a filter rated by the manufacturer to achieve a capture efficiency of 99.97 percent for 0.3 micron particles or routed to an existing control device permitted for this activity.

(iii) Performing maintenance inside a partial enclosure and use of wet suppression sufficient to prevent dust formation.

(iv) Decontamination of equipment prior to removal from an enclosure.

(v) Immediate repair of ductwork or structure leaks without an enclosure if the time to construct a temporary enclosure would exceed the time to make a temporary or permanent repair, or if construction of an enclosure would cause a higher level of emissions than if an enclosure were not constructed.

(vi) Activities required for inspection of fabric filters and maintenance of filters that are in need of removal and replacement are not required to be conducted inside of total enclosures. Used fabric filters must be placed in sealed plastic bags or containers prior to removal from a baghouse.

(7) *Material transport.* You must collect and transport all lead bearing dust (*i.e.* lead bearing material which is a dust) within closed conveyor systems or in sealed, leak-proof containers unless the collection and transport activities are contained within a total enclosure. All other lead bearing material must be contained and covered for transport outside of a total enclosure in a manner that prevents spillage or dust formation. Intact batteries and lead ingot product are exempt from the requirement to be covered for transport.

(d) Your standard operating procedures manual must specify that records be maintained of all pavement cleaning, vehicle washing, and battery storage inspection activities performed to control fugitive dust emissions.

(e) You must pave all grounds on the facility or plant groundcover sufficient to prevent wind-blown dust. You may use dust suppressants on unpaved areas that will not support a groundcover (e.g., roadway shoulders, steep slopes, limited access and limited use roadways).

(f) As provided in §63.6(g), as an alternative to the requirements specified in this section, you can demonstrate to the Administrator (or delegated State, local, or Tribal authority) that an alternative measure(s) is equivalent or better than a practice(s) described in this section.

§63.546 Compliance dates.

(a) For affected sources that commenced construction or reconstruction on or before May 19, 2011, you must demonstrate compliance with the requirements of this subpart no later than January 6, 2014.

(b) For affected sources that commenced construction or reconstruction after May 19, 2011, you must demonstrate compliance with the requirements of this subpart by January 5, 2012 or upon startup of operations, whichever is later.

(c) Until the date specified in 63.546(a), secondary lead smelters that commenced construction or reconstruction on or before May 19, 2011, must continue to demonstrate compliance with the requirements of this subpart, codified in 40 CFR 63.541 through 40 CFR 63.550, that were in effect prior to the January 5, 2012, amendments. This means that secondary lead smelters that commenced construction or reconstruction on or before June 9, 1994, must continue to demonstrate compliance with existing source requirements of this subpart that were in effect prior to the January 5, 2012, amendments until the date specified in §63.546(a). Secondary lead smelters that commenced construction or reconstruction after June 9, 1994, and on or before May 19, 2011, must continue to demonstrate compliance with new source requirements of this subpart that were in effect prior to the January 5, 2012, amendments until the date specified in §63.546(a).

[77 FR 580, Jan. 5, 2012, as amended at 79 FR 371, Jan. 3, 2014]

§63.547 Test methods.

(a) You must use the test methods from appendix A of part 60 as listed in paragraphs (a)(1) through (5) of this section to determine compliance with the emissions standards for lead compounds specified in §63.543(a) and (b).

(1) EPA Method 1 at 40 CFR part 60, appendix A-1 to select the sampling port location and the number of traverse points.

(2) EPA Method 2 at 40 CFR part 60, appendix A-1 or EPA Method 5D at 40 CFR part 60, appendix A-3, section 8.3 for positive pressure fabric filters, to measure volumetric flow rate.

(3) EPA Method 3, 3A, or 3B at 40 CFR part 60, appendix A-2 to determine the dry molecular weight of the stack gas.

(4) EPA Method 4 at 40 CFR part 60, appendix A-3 to determine moisture content of the stack gas.

(5) EPA Method 12 or Method 29 at 40 CFR part 60, appendix A-8 to determine compliance with the lead compound emissions standards. The minimum sample volume must be 2.0 dry standard cubic meters (70 dry standard cubic feet) for each run. You must perform three test runs and you must determine compliance using the average of the three runs.

(b) You must use the following test methods in appendix A of part 60 listed in paragraphs (b)(1) through (4) of this section, as specified, to determine compliance with the emissions standards for total hydrocarbons specified in §63.543(c) through (f).

(1) EPA Method 1 at 40 CFR part 60, appendix A-1 to select the sampling port location and number of traverse points.

(2) The Single Point Integrated Sampling and Analytical Procedure of Method 3B to measure the carbon dioxide content of the stack gases when using either EPA Method 3A or 3B at 40 CFR part 60, appendix A-2.

(3) EPA Method 4 at 40 CFR part 60, appendix A-3 to measure moisture content of the stack gases.

(4) EPA Method 25A at 40 CFR part 60, appendix A-7 to measure total hydrocarbons emissions. The minimum sampling time must be 1 hour for each run. You must perform a minimum of three test runs. You must calculate a 1-hour average total hydrocarbons concentration for each run and use the average of the three 1-hour averages to determine compliance.

(c) You must correct the measured total hydrocarbons concentrations to 4 percent carbon dioxide as specified in paragraphs (c)(1) through (3) of this section.

(1) If the measured percent carbon dioxide is greater than 0.4 percent in each compliance test, you must determine the correction factor using Equation 2 of this section.

$$F = \frac{4.0}{CO_2} \qquad \text{(Eq. 2)}$$

View or download PDF

Where:

F = Correction factor (no units).

CO_2 = Percent carbon dioxide measured using EPA Method 3A or 3B at 40 CFR part 60, appendix A-2, where the measured carbon dioxide is greater than 0.4 percent.

(2) If the measured percent carbon dioxide is equal to or less than 0.4 percent, you must use a correction factor (F) of 10.

(3) You must determine the corrected total hydrocarbons concentration by multiplying the measured total hydrocarbons concentration by the correction factor (F) determined for each compliance test.

(d) You must use the following test methods in appendix A of part 60 listed in paragraphs (d)(1) through (5) of this section, as specified, to determine compliance with the emissions standards for dioxins and furans specified in §63.543(c).

(1) EPA Method 1 at 40 CFR part 60, appendix A-1 to select the sampling port location and the number of traverse points.

(2) EPA Method 2 at 40 CFR part 60, appendix A-1 or EPA Method 5D at 40 CFR part 60, appendix A-3, section 8.3 for positive pressure fabric filters to measure volumetric flow rate.

(3) EPA Method 3A or 3B at 40 CFR part 60, appendix A-2 to determine the oxygen and carbon dioxide concentrations of the stack gas.

(4) EPA Method 4 at 40 CFR part 60, appendix A-3 to determine moisture content of the stack gas.

(5) EPA Method 23 at 40 CFR part 60, appendix A-7 to determine the dioxins and furans concentration.

(e) You must determine the dioxins and furans toxic equivalency by following the procedures in paragraphs (e)(1) through (3) of this section.

(1) Measure the concentration of each dioxins and furans congener shown in Table 3 of this subpart using EPA Method 23 at 40 CFR part 60, appendix A-7. You must correct the concentration of dioxins and furans in terms of toxic equivalency to 7 percent O_2 using Equation 3 of this section.

$$Cadj = \frac{Cmeas(20.9-7)}{(20.9-\%O2)} \qquad \text{(Eq. 3)}$$

View or download PDF

Where:

C_{adj} = Dioxins and furans concentration adjusted to 7 percent oxygen.

C_{meas} = Dioxins and furans concentration measured in nanograms per dry standard cubic meter.

(20.9-7) = 20.9 percent oxygen—7 percent oxygen (defined oxygen correction basis).

20.9 = Oxygen concentration in air, percent.

$\%O_2$ = Oxygen concentration measured on a dry basis, percent.

(2) For each dioxins and furans congener measured as specified in paragraph (e)(1) of this section, multiply the congener concentration by its corresponding toxic equivalency factor specified in Table 3 to this subpart.

(3) Sum the values calculated as specified in paragraph (e)(2) of this section to obtain the total concentration of dioxins and furans emitted in terms of toxic equivalency.

§63.548 Monitoring requirements.

(a) You must prepare, and at all times operate according to, a standard operating procedures manual that describes in detail procedures for inspection, maintenance, and bag leak detection

and corrective action plans for all baghouses (fabric filters or cartridge filters) that are used to control process vents, process fugitive, or fugitive dust emissions from any source subject to the lead emissions standards in §§63.543, 63.544, and 63.545, including those used to control emissions from building ventilation.

(b) You must submit the standard operating procedures manual for baghouses required by paragraph (a) of this section to the Administrator or delegated authority for review and approval.

(c) The procedures that you specify in the standard operating procedures manual for inspections and routine maintenance must, at a minimum, include the requirements of paragraphs (c)(1) through (9) of this section.

(1) Daily monitoring of pressure drop across each baghouse cell.

(2) Weekly confirmation that dust is being removed from hoppers through visual inspection, or equivalent means of ensuring the proper functioning of removal mechanisms.

(3) Daily check of compressed air supply for pulse-jet baghouses.

(4) An appropriate methodology for monitoring cleaning cycles to ensure proper operation.

(5) Monthly check of bag cleaning mechanisms for proper functioning through visual inspection or equivalent means.

(6) Monthly check of bag tension on reverse air and shaker-type baghouses. Such checks are not required for shaker-type baghouses using self-tensioning (spring loaded) devices.

(7) Quarterly confirmation of the physical integrity of the baghouse through visual inspection of the baghouse interior for air leaks.

(8) Quarterly inspection of fans for wear, material buildup, and corrosion through visual inspection, vibration detectors, or equivalent means.

(9) Except as provided in paragraphs (g) and (h) of this section, continuous operation of a bag leak detection system, unless a system meeting the requirements of paragraph (m) of this section for a continuous emissions monitoring system is installed for monitoring the concentration of lead.

(d) The procedures you specify in the standard operating procedures manual for baghouse maintenance must include, at a minimum, a preventative maintenance schedule that is consistent with the baghouse manufacturer's instructions for routine and long-term maintenance.

(e) The bag leak detection system required by paragraph (c)(9) of this section, must meet the specification and requirements of paragraphs (e)(1) through (8) of this section.

(1) The bag leak detection system must be certified by the manufacturer to be capable of detecting particulate matter emissions at concentrations of 1.0 milligram per actual cubic meter (0.00044 grains per actual cubic foot) or less.

(2) The bag leak detection system sensor must provide output of relative particulate matter loadings.

(3) The bag leak detection system must be equipped with an alarm system that will alarm when an increase in relative particulate loadings is detected over a preset level.

(4) You must install and operate the bag leak detection system in a manner consistent with the guidance provided in "Office of Air quality Planning and Standards (OAQPS) Fabric Filter Bag Leak Detection Guidance" EPA-454/R-98-015, September 1997 (incorporated by reference, see §63.14) and the manufacturer's written specifications and recommendations for installation, operation, and adjustment of the system.

(5) The initial adjustment of the system must, at a minimum, consist of establishing the baseline output by adjusting the sensitivity (range) and the averaging period of the device, and establishing the alarm set points and the alarm delay time.

(6) Following initial adjustment, you must not adjust the sensitivity or range, averaging period, alarm set points, or alarm delay time, except as detailed in the approved standard operating procedures manual required under paragraph (a) of this section. You cannot increase the sensitivity by more than 100 percent or decrease the sensitivity by more than 50 percent over a 365 day period unless such adjustment follows a complete baghouse inspection that demonstrates that the baghouse is in good operating condition.

(7) For negative pressure, induced air baghouses, and positive pressure baghouses that are discharged to the atmosphere through a stack, you must install the bag leak detector downstream of the baghouse and upstream of any wet acid gas scrubber.

(8) Where multiple detectors are required, the system's instrumentation and alarm may be shared among detectors.

(f) You must include in the standard operating procedures manual required by paragraph (a) of this section a corrective action plan that specifies the procedures to be followed in the case of a bag leak detection system alarm. The corrective action plan must include, at a minimum, the procedures that you will use to determine and record the time and cause of the alarm as well as the corrective actions taken to minimize emissions as specified in paragraphs (f)(1) and (f)(2) of this section.

(1) The procedures used to determine the cause of the alarm must be initiated within 30 minutes of the alarm.

(2) The cause of the alarm must be alleviated by taking the necessary corrective action(s) that may include, but not be limited to, those listed in paragraphs (f)(2)(i) through (vi) of this section.

(i) Inspecting the baghouse for air leaks, torn or broken filter elements, or any other malfunction that may cause an increase in emissions.

(ii) Sealing off defective bags or filter media.

(iii) Replacing defective bags or filter media, or otherwise repairing the control device.

(iv) Sealing off a defective baghouse compartment.

(v) Cleaning the bag leak detection system probe, or otherwise repairing the bag leak detection system.

(vi) Shutting down the process producing the particulate emissions.

(g) Baghouses equipped with high efficiency particulate air (or HEPA) filters as a secondary filter used to control emissions from any source subject to the lead emission standards in §65.543(a) or (b), are exempt from the requirement to be equipped with a bag leak detection system. You must monitor and record the pressure drop across each HEPA filter system daily. If the pressure drop is outside the limit(s) specified by the filter manufacturer, you must take appropriate corrective measures, which may include but not be limited to those given in paragraphs (g)(1) through (4) of this section.

(1) Inspecting the filter and filter housing for air leaks and torn or broken filters.

(2) Replacing defective filter media, or otherwise repairing the control device.

(3) Sealing off a defective control device by routing air to other control devices

(4) Shutting down the process producing the particulate emissions.

(h) Baghouses followed by a wet electrostatic precipitator used as a secondary control device for any source subject to the lead emission standards in §63.543(a) or (b), are exempt from the requirement to be equipped with a bag leak detection system.

(i) If you use a wet scrubber to control particulate matter and metal hazardous air pollutant emissions from a process vent to demonstrate continuous compliance with the emissions standards, you must monitor and record the pressure drop and water flow rate of the wet scrubber during the initial performance or compliance test conducted to demonstrate compliance with the lead emissions limit under §63.543(a) or (b). Thereafter, you must monitor and record the pressure drop and water flow rate values at least once every hour and you must maintain the pressure drop and water flow rate at levels no lower than 30 percent below the pressure drop and water flow rate measured during the initial performance or compliance test.

(j) You must comply with the requirements specified in paragraphs (j)(1) through (4) of this section to demonstrate continuous compliance with the total hydrocarbons and dioxins and furans emissions standards. During periods of startup and shutdown, the requirements of paragraph (j)(4) of this section do not apply. Instead, you must demonstrate compliance with the standard for total hydrocarbon by meeting the requirements of §63.543(l).

(1) Continuous temperature monitoring. You must install, calibrate, maintain, and continuously operate a device to monitor and record the temperature of the afterburner or furnace exhaust streams consistent with the requirements for continuous monitoring systems in §63.8.

(2) Prior to or in conjunction with the initial performance or compliance test to determine compliance with §63.543(c), you must conduct a performance evaluation for the temperature monitoring device according to §63.8(e). The definitions, installation specifications, test procedures, and data reduction procedures for determining calibration drift, relative accuracy, and reporting described in Performance Specification 2, 40 CFR part 60, appendix B, sections 2, 3, 5, 7, 8, 9, and 10 must be used to conduct the evaluation. The temperature monitoring device must meet the following performance and equipment specifications:

(i) The recorder response range must include zero and 1.5 times the average temperature identified in paragraph (j)(3) of this section.

(ii) The monitoring system calibration drift must not exceed 2 percent of 1.5 times the average temperature identified in paragraph (j)(3) of this section.

(iii) The monitoring system relative accuracy must not exceed 20 percent.

(iv) The reference method must be a National Institute of Standards and Technology calibrated reference thermocouple-potentiometer system or an alternate reference, subject to the approval of the Administrator.

(3) You must monitor and record the temperature of the afterburner or the furnace exhaust streams every 15 minutes during the initial performance or compliance test for total hydrocarbons and dioxins and furans and determine an arithmetic average for the recorded temperature measurements.

(4) To demonstrate continuous compliance with the standards for total hydrocarbons and dioxins and furans, you must maintain an afterburner or exhaust temperature such that the average temperature in any 3-hour period does not fall more than 28 °Celsius (50 °Fahrenheit) below the average established in paragraph (j)(3) of this section.

(k) You must install, operate, and maintain a digital differential pressure monitoring system to continuously monitor each total enclosure as described in paragraphs (k)(1) through (5) of this section.

(1) You must install and maintain a minimum of one building digital differential pressure monitoring system at each of the following three walls in each total enclosure that has a total ground surface area of 10,000 square feet or more:

(i) The leeward wall.

(ii) The windward wall.

(iii) An exterior wall that connects the leeward and windward wall at a location defined by the intersection of a perpendicular line between a point on the connecting wall and a point on its furthest opposite exterior wall, and intersecting within plus or minus 10 meters of the midpoint of a straight line between the two other monitors specified. The midpoint monitor must not be located on the same wall as either of the other two monitors. If approved by the permitting authority, this third monitor may be placed in an alternative location on the midpoint wall or an exterior wall that is not the windward wall, leeward wall or midpoint wall.

(2) You must install and maintain a minimum of one building digital differential pressure monitoring system at the leeward wall of each total enclosure that has a total ground surface area of less than 10,000 square feet.

(3) The digital differential pressure monitoring systems must be certified by the manufacturer to be capable of measuring and displaying negative pressure containing values in the range of 0.01 to 0.2 millimeters mercury (0.005 to 0.11 inches of water) and capable of recording data in increments of 0.002 millimeters of mercury (0.001 inches of water).

(4) You must equip each digital differential pressure monitoring system with a continuous recorder. To demonstrate compliance with the standard for differential pressure, you must maintain the pressure in total enclosures such that the average pressure in any 15-minute period does not fall below the level specified in §63.544(c)(1). The 15-minute averages must include at least one reading per minute.

(5) You must calibrate each digital differential pressure monitoring system in accordance with manufacturer's specifications.

(l) Except as provided in paragraphs (l)(2) or (3) of this section, all new or reconstructed sources subject to the requirements under §63.543 must install, calibrate, maintain, and operate a CEMS for measuring lead emissions. In addition to the General Provisions requirements for CEMS in §63.8(c) that are referenced in Table 1 to this subpart, you must comply with the requirements for CEMS specified in paragraph (m) of this section.

(1) Sources subject to the emissions limits for lead compounds under §63.543(b) must install a CEMS for measuring lead emissions within 180 days of promulgation by the EPA of performance specifications for lead CEMS.

(2) Prior to 180 days after the EPA promulgates performance specifications for CEMS used to measure lead concentrations, you must use the procedure described in §63.543(g)(1) to determine compliance.

(3) Vents from control devices that serve only to control emissions from buildings containing lead bearing materials are exempt from the requirement to install a CEMS for measuring lead emissions.

(m) If a CEMS is used to measure lead emissions, you must install a continuous emissions monitoring system with a sensor in a location that provides representative measurement of the exhaust gas flow rate at the sampling location of the CEMS used to measure lead emissions, taking into account the manufacturer's recommendations. The flow rate sensor is that portion of the system that senses the volumetric flow rate and generates an output proportional to that flow rate.

(1) The continuous emissions monitoring system must be designed to measure the exhaust gas flow rate over a range that extends from a value of at least 20 percent less than the lowest expected exhaust flow rate to a value of at least 20 percent greater than the highest expected exhaust gas flow rate.

(2) The continuous emissions monitoring system must be equipped with a data acquisition and recording system that is capable of recording values over the entire range specified in paragraph (m)(1) of this section.

(3) You must perform an initial relative accuracy test of the continuous emissions monitoring system in accordance with the applicable Performance Specification in appendix B to part 60 of this chapter.

(4) You must operate the continuous emissions monitoring system and record data during all periods of operation of the affected facility including periods of startup, shutdown, and malfunction, except for periods of monitoring system malfunctions, repairs associated with monitoring system malfunctions, and required monitoring system quality assurance or quality control activities including, as applicable, calibration checks and required zero and span adjustments.

(5) If you have a CEMS to measure lead emissions, you must calculate the average lead concentration and flow rate monthly to determine compliance with §63.543(a).

(6) When the continuous emissions monitoring system is unable to provide quality assured data, the following apply:

(i) When data are not available for periods of up to 48 hours, the highest recorded hourly emissions rate from the previous 24 hours must be used.

(ii) When data are not available for 48 or more hours, the maximum daily emissions rate based on the previous 30 days must be used.

[77 FR 580, Jan. 5, 2012, as amended at 79 FR 371, Jan. 3, 2014]

§63.549 Notification requirements.

(a) You must comply with all of the notification requirements of §63.9. Electronic notifications are encouraged if suitable for the specific case (e.g., by electronic media such as Excel spreadsheet, on CD or hard copy), and when required by this subpart.

(b) You must submit the fugitive dust control standard operating procedures manual required under §63.545(a) and the standard operating procedures manual for baghouses required under §63.548(a) to the Administrator or delegated authority along with a notification that the smelter is seeking review and approval of these plans and procedures. You must submit this notification no later than January 7, 2013. For sources that commenced construction or reconstruction after January 5, 2012, you must submit this notification no later than 180 days before startup of the constructed or reconstructed secondary lead smelter, but no sooner than January 5, 2012. For an affected source that has received a construction permit from the Administrator or delegated authority on or before January 5, 2012, you must submit this notification no later than January 7, 2014.

§63.550 Recordkeeping and reporting requirements.

(a) You must comply with all of the recordkeeping and reporting requirements specified in §63.10 that are referenced in Table 1 to this subpart.

(1) Records must be maintained in a form suitable and readily available for expeditious review, according to §63.10(b)(1). However, electronic recordkeeping and reporting if suitable for the specific case (e.g., by electronic media such as Excel spreadsheet, on CD or hard copy), and when required by this subpart.

(2) Records must be kept on site for at least 2 years after the date of occurrence, measurement, maintenance, corrective action, report, or record, according to §63.10(b)(1).

(b) The standard operating procedures manuals required in §§63.545(a) and 63.548(a) must be submitted to the Administrator in electronic format for review and approval of the initial submittal and whenever an update is made to the procedure.

(c) You must maintain for a period of 5 years, records of the information listed in paragraphs (c)(1) through (13) of this section.

(1) Electronic records of the bag leak detection system output.

(2) An identification of the date and time of all bag leak detection system alarms, the time that procedures to determine the cause of the alarm were initiated, the cause of the alarm, an explanation of the corrective actions taken, and the date and time the cause of the alarm was corrected.

(3) All records of inspections and maintenance activities required under §63.548(c) as part of the practices described in the standard operating procedures manual for baghouses required under §63.548(a).

(4) Electronic records of the pressure drop and water flow rate values for wet scrubbers used to control metal hazardous air pollutant emissions from process fugitive sources as required in §63.548(i).

(5) Electronic records of the output from the continuous temperature monitor required in §63.548(j)(1), and an identification of periods when the 3-hour average temperature fell below the minimum established under §63.548(j)(4), and an explanation of the corrective actions taken.

(6) Electronic records of the continuous pressure monitors for total enclosures required in §63.548(k), and an identification of periods when the pressure was not maintained as required in §63.544(c)(1).

(7) Records of any time periods power was lost to the continuous pressure monitors for total enclosures required in §63.548(k) and records of loss of power to the air handling system maintaining negative pressure on total enclosures.

(8) Records of the inspections of facility enclosures required in §63.544(d).

(9) Records of all cleaning and inspections required as part of the practices described in the standard operating procedures manual required under §63.545(a) for the control of fugitive dust emissions.

(10) Electronic records of the output of any CEMS installed to monitor lead emissions meeting the requirements of §63.548(m).

(11) Records of the occurrence and duration of each malfunction of operation (*i.e.*, process equipment) or the air pollution control equipment and monitoring equipment.

(12) Records of actions taken during periods of malfunction to minimize emissions in accordance with §63.543(k), including corrective actions to restore malfunctioning process and air pollution control and monitoring equipment to its normal or usual manner of operation.

(13) Records of any periods of startup or shutdown of a furnace and actions taken to minimize emissions during that period in accordance with §63.543(l).

(d) You must comply with all of the reporting requirements specified in §63.10 of the General Provisions that are referenced in Table 1 to this subpart.

(1) You must submit reports no less frequent than specified under §63.10(e)(3) of the General Provisions.

(2) Once a source reports a violation of the standard or excess emissions, you must follow the reporting format required under §63.10(e)(3) until a request to reduce reporting frequency is approved by the Administrator.

(e) In addition to the information required under the applicable sections of §63.10, you must include in the reports required under paragraph (d) of this section the information specified in paragraphs (e)(1) through (14) of this section.

(1) Records of the concentration of lead in each process vent, and records of the rolling 12-month flow-weighted average concentration of lead compounds in vent gases calculated monthly as required in §63.543(a), except during the first year when the concentration is calculated using the method described in §63.543(a)(2).

(2) Records of the concentration of total hydrocarbon and dioxins and furans in each process vent that has established limits for total hydrocarbon and dioxins and furans as required in §63.543(c).

(3) Records of all periods when monitoring using a CEMS for lead or total hydrocarbon was not in compliance with applicable limits.

(4) Records of all alarms from the bag leak detection system specified in §63.548.

(5) A description of the procedures taken following each bag leak detection system alarm pursuant to §63.548(f)(1) and (2).

(6) A summary of the records maintained as part of the practices described in the standard operating procedures manual for baghouses required under §63.548(a), including an explanation of the periods when the procedures were not followed and the corrective actions taken.

(7) An identification of the periods when the pressure drop and water flow rate of wet scrubbers used to control process fugitive sources dropped below the levels established in §63.548(i), and an explanation of the corrective actions taken.

(8) Records of the temperature monitor output, in 3-hour block averages, for those periods when the temperature monitored pursuant to §63.548(j) fell below the level established in §63.548(j)(4).

(9) Certification that the plastic separation process for battery breakers required in §63.543(m) was operated at all times the battery breaker was in service.

(10) Records of 15-minute periods when the pressure was not maintained as required in §63.544(c) or power was lost to the continuous pressure monitoring system as required in §63.548(k). Records of which wall is chosen as the windward wall must be included in the records required by §63.10(c) if a total enclosure located within a larger structure is not impacted by ambient wind.

(11) If a malfunction occurred during the reporting period, the report must include the number, duration, and a brief description for each type of malfunction that occurred during the reporting period and caused or may have caused any applicable emissions limitation to be exceeded. The report must also include a description of actions taken during a malfunction of an affected source to minimize emissions in accordance with §63.543(k), including actions taken to correct a malfunction.

(12) A summary of the fugitive dust control measures performed during the required reporting period, including an explanation of the periods when the procedures outlined in the standard operating procedures manual pursuant to §63.545(a) were not followed and the corrective actions taken. The reports must not contain copies of the daily records required to demonstrate compliance with the requirements of the standard operating procedures manuals required under §63.545(a).

(13) Records of any periods of startup or shutdown of a furnace including an explanation of the periods when the procedures required in §63.543(l) were not followed and the corrective actions taken.

(14) You must submit records pursuant to paragraphs (e)(14)(i) through (iii) of this section.

(i) As of January 1, 2012 and within 60 days after the date of completing each performance test, as defined in §63.2 and as required in this subpart, you must submit performance test data, except opacity data, electronically to EPA's Central Data Exchange by using the Electronic Reporting Tool (see *http://www.epa.gov/ttn/chief/ert/ert_tool.html/*). Only data collected using test methods compatible with the Electronic Reporting Tool are subject to this requirement to be submitted electronically into EPA's WebFIRE database.

(ii) Within 60 days after the date of completing each CEMS performance evaluation test, as defined in §63.2 and required by this subpart, you must submit the relative accuracy test audit data electronically into EPA's Central Data Exchange by using the Electronic Reporting Tool as mentioned in paragraph (e)(14)(i) of this section. Only data collected using test methods compatible with the Electronic Reporting Tool are subject to this requirement to be submitted electronically into EPA's WebFIRE database.

(iii) All reports required by this subpart not subject to the requirements in paragraph (e)(14)(i) and (ii) of this section must be sent to the Administrator at the appropriate address listed in §63.13. The Administrator or the delegated authority may request a report in any form suitable for the specific case (e.g., by electronic media such as Excel spreadsheet, on CD or hard copy). The Administrator retains the right to require submittal of reports subject to paragraph (e)(14)(i) and (ii) of this section in paper format.

[77 FR 580, Jan. 5, 2012, as amended at 79 FR 372, Jan. 3, 2014]

§63.551 Implementation and enforcement.

(a) This subpart can be implemented and enforced by the U.S. EPA, or a delegated authority such as the applicable State, local, or tribal agency. If the U.S. EPA Administrator has delegated

authority to a State, local, or tribal agency, then that agency, in addition to the U.S. EPA, has the authority to implement and enforce this subpart. Contact the applicable U.S. EPA Regional Office to find out if this subpart is delegated to a State, local, or tribal agency.

(b) In delegating implementation and enforcement authority of this subpart to a State, local, or tribal agency under subpart E of this part, the authorities contained in paragraph (c) of this section are retained by the Administrator of U.S. EPA and cannot be transferred to the State, local, or tribal agency.

(c) The authorities that cannot be delegated to State, local, or tribal agencies are as specified in paragraphs (c)(1) through (4) of this section.

(1) Approval of alternatives to the requirements in §§63.541, 63.543 through 63.544, §63.545, and §63.546.

(2) Approval of major alternatives to test methods under §63.7(e)(2)(ii) and (f), as defined in §63.90, and as required in this subpart.

(3) Approval of major alternatives to monitoring under §63.8(f), as defined in §63.90, and as required in this subpart.

(4) Approval of major alternatives to recordkeeping and reporting under §63.10(f), as defined in §63.90, and as required in this subpart.

§63.552 Affirmative defense to civil penalties for exceedance of emissions limit during malfunction.

In response to an action to enforce the standards set forth in this subpart, you may assert an affirmative defense to a claim for civil penalties for exceedances of such standards that are caused by malfunction, as defined at §63.2. Appropriate penalties may be assessed, however, if you fail to meet your burden of proving all of the requirements in the affirmative defense. The affirmative defense shall not be available for claims for injunctive relief.

(a) *Affirmative defense.* To establish the affirmative defense in any action to enforce such a limit, you must timely meet the notification requirements in paragraph (b) of this section, and must prove by a preponderance of evidence that:

(1) The excess emissions:

(i) Were caused by a sudden, infrequent, and unavoidable failure of air pollution control and monitoring equipment, process equipment, or a process to operate in a normal or usual manner.

(ii) Could not have been prevented through careful planning, proper design or better operation and maintenance practices.

(iii) Did not stem from any activity or event that could have been foreseen and avoided, or planned for.

(iv) Were not part of a recurring pattern indicative of inadequate design, operation, or maintenance.

(2) Repairs were made as expeditiously as possible when the applicable emissions limitations were being exceeded. Off-shift and overtime labor were used, to the extent practicable to make these repairs.

(3) The frequency, amount and duration of the excess emissions (including any bypass) were minimized to the maximum extent practicable during periods of such emissions.

(4) If the excess emissions resulted from a bypass of control equipment or a process, then the bypass was unavoidable to prevent loss of life, personal injury, or severe property damage.

(5) All possible steps were taken to minimize the impact of the excess emissions on ambient air quality, the environment and human health.

(6) All emissions monitoring and control systems were kept in operation if at all possible, consistent with safety and good air pollution control practices.

(7) All of the actions in response to the excess emissions were documented by properly signed, contemporaneous operating logs.

(8) At all times, the affected source was operated in a manner consistent with good practices for minimizing emissions.

(9) A written root cause analysis has been prepared, the purpose of which is to determine, correct, and eliminate the primary causes of the malfunction and the excess emissions resulting from the malfunction event at issue. The analysis shall also specify, using best monitoring methods and engineering judgment, the amount of excess emissions that were the result of the malfunction.

(b) *Notification.* The owner or operator of the affected source experiencing an exceedance of its emissions limit(s) during a malfunction, shall notify the Administrator by telephone or facsimile transmission as soon as possible, but no later than two business days after the initial occurrence of the malfunction, it wishes to avail itself of an affirmative defense to civil penalties for that malfunction. The owner or operator seeking to assert an affirmative defense, shall also submit a written report to the Administrator within 45 days of the initial occurrence of the exceedance of the standard in this subpart to demonstrate, with all necessary supporting documentation, that it has met the requirements set forth in paragraph (a) of this section. The owner or operator may seek an extension of this deadline for up to 30 additional days by submitting a written request to the Administrator before the expiration of the 45-day period. Until a request for an extension has

been approved by the Administrator, the owner or operator is subject to the requirement to submit such report within 45 days of the initial occurrence of the exceedance.

40 CFR 63, Subpart XXXXXX
National Emission Standards for Hazardous Air Pollutants Area

Nine Metal Fabrication and Finishing

§63.11514 Am I subject to this subpart?

(a) You are subject to this subpart if you own or operate an area source that is primarily engaged in the operations in one of the nine source categories listed in paragraphs (a)(1) through (9) of this section. Descriptions of these source categories are shown in Table 1 of this subpart. "Primarily engaged" is defined in §63.11522, "What definitions apply to this subpart?"

(1) Electrical and Electronic Equipment Finishing Operations;

(2) Fabricated Metal Products;

(3) Fabricated Plate Work (Boiler Shops);

(4) Fabricated Structural Metal Manufacturing;

(5) Heating Equipment, except Electric;

(6) Industrial Machinery and Equipment Finishing Operations;

(7) Iron and Steel Forging;

(8) Primary Metal Products Manufacturing; and

(9) Valves and Pipe Fittings.

P. Kay Metal is primarily engaged in 2.

(b) The provisions of this subpart apply to each new and existing affected source listed and defined in paragraphs (b)(1) through (5) of this section if you use materials that contain or have the potential to emit metal fabrication or finishing metal HAP (MFHAP), defined to be the compounds of cadmium, chromium, lead, manganese, and nickel, or any of these metals in the elemental form with the exception of lead. Materials that contain MFHAP are defined to be materials that contain greater than 0.1 percent for carcinogens, as defined by OSHA at 29 CFR 1910.1200(d)(4), and greater than 1.0 percent for noncarcinogens. For the MFHAP, this corresponds to materials that contain cadmium, chromium, lead, or nickel in amounts greater than or equal to 0.1 percent by weight (of the metal), and materials that contain manganese in amounts greater than or equal to 1.0 percent by weight (of the metal), as shown in formulation data provided by the manufacturer or supplier, such as the Material Safety Data Sheet for the material.

(1) A dry abrasive blasting affected source is the collection of all equipment and activities necessary to perform dry abrasive blasting operations which use materials that contain MFHAP or that have the potential to emit MFHAP.

P. Kay Metal does not perform dry abrasive blasting. This does not apply.

(2) A machining affected source is the collection of all equipment and activities necessary to perform machining operations which use materials that contain MFHAP, as defined in §63.11522, "What definitions apply to this subpart?", or that have the potential to emit MFHAP.

P. Kay Metal does not perform machining. This does not apply.

(3) A dry grinding and dry polishing with machines affected source is the collection of all equipment and activities necessary to perform dry grinding and dry polishing with machines operations which use materials that contain MFHAP, as defined in §63.11522, "What definitions apply to this subpart?", or have the potential to emit MFHAP.

P. Kay Metal does not perform dry grinding. This does not apply.

(4) A spray painting affected source is the collection of all equipment and activities necessary to perform spray-applied painting operations using paints which contain MFHAP. A spray painting affected source includes all equipment used to apply cleaning materials to a substrate to prepare it for paint application (surface preparation) or to remove dried paint; to apply a paint to a substrate (paint application) and to dry or cure the paint after application; or to clean paint operation equipment (equipment cleaning). Affected source(s) subject to the requirements of this paragraph are not subject to the miscellaneous surface coating provisions of subpart HHHHHH of this part, "National Emission Standards for Hazardous Air Pollutants: Paint Stripping and Miscellaneous Surface Coating Operations at Area Sources."

P. Kay Metal does not perform spray painting. This does not apply.

(5) A welding affected source is the collection of all equipment and activities necessary to perform welding operations which use materials that contain MFHAP, as defined in §63.11522, "What definitions apply to this subpart?", or have the potential to emit MFHAP.

P. Kay Metal does not perform welding. This does not apply.

(c) An affected source is existing if you commenced construction or reconstruction of the affected source, as defined in §63.2, "General Provisions" to part 63, before April 3, 2008.

(d) An affected source is new if you commenced construction or reconstruction of the affected source, as defined in §63.2, "General Provisions" to part 63, on or after April 3, 2008.

(e) This subpart does not apply to research or laboratory facilities, as defined in section 112(c)(7) of the Clean Air Act (CAA).

(f) This subpart does not apply to tool or equipment repair operations, facility maintenance, or quality control activities as defined in §63.11522, "What definitions apply to this subpart?"

(g) This subpart does not apply to operations performed on site at installations owned or operated by the Armed Forces of the United States (including the Coast Guard and the National Guard of any such state), the National Aeronautics and Space Administration, or the National Nuclear Security Administration.

(h) This subpart does not apply to operations that produce military munitions, as defined in §63.11522, "What definitions apply to this subpart?", manufactured by or for the Armed Forces of the United States (including the Coast Guard and the National Guard of any such state), or equipment directly and exclusively used for the purposes of transporting military munitions.

(i) You are exempt from the obligation to obtain a permit under 40 CFR part 70 or 40 CFR part 71, provided you are not otherwise required by law to obtain a permit under 40 CFR 70.3(a) or 40 CFR 71.3(a). Notwithstanding the previous sentence, you must continue to comply with the provisions of this subpart.

40 CFR 63 Subpart XXXXXX does not apply to P. Kay Metal.

§63.11515 What are my compliance dates?

(a) If you own or operate an existing affected source, you must achieve compliance with the applicable provisions in this subpart by July 25, 2011.

(b) If you own or operate a new affected source, you must achieve compliance with the applicable provisions in this subpart by July 23, 2008, or upon startup of your affected source, whichever is later.

STANDARDS AND COMPLIANCE REQUIREMENTS

§63.11516 What are my standards and management practices?

(a) *Dry abrasive blasting standards.* If you own or operate a new or existing dry abrasive blasting affected source, you must comply with the requirements in paragraphs (a)(1) through (3) of this section, as applicable, for each dry abrasive blasting operation that uses materials that contain MFHAP, as defined in §63.11522, "What definitions apply to this subpart?", or has the potential to emit MFHAP. These requirements do not apply when abrasive blasting operations are being performed that do not use any materials containing MFHAP or do not have the potential to emit MFHAP.

(1) *Standards for dry abrasive blasting of objects performed in totally enclosed and unvented blast chambers.* If you own or operate a new or existing dry abrasive blasting affected source which consists of an abrasive blasting chamber that is totally enclosed and unvented, as defined in §63.11522, "What definitions apply to this subpart?", you must implement management practices to minimize emissions of MFHAP. These management practices are the practices specified in paragraph (a)(1)(i) and (ii) of this section.

(i) You must minimize dust generation during emptying of abrasive blasting enclosures; and

(ii) You must operate all equipment associated with dry abrasive blasting operations according to the manufacturer's instructions.

(2) *Standards for dry abrasive blasting of objects performed in vented enclosures.* If you own or operate a new or existing dry abrasive blasting affected source which consists of a dry abrasive blasting operation which has a vent allowing any air or blast material to escape, you must comply with the requirements in paragraphs (a)(2)(i) and (ii) of this section. Dry abrasive blasting operations for which the items to be blasted exceed 8 feet (2.4 meters) in any dimension, may be performed subject to the requirements in paragraph (a)(3) of this section.

(i) You must capture emissions and vent them to a filtration control device. You must operate the filtration control device according to manufacturer's instructions, and you must demonstrate compliance with this requirement by maintaining a record of the manufacturer's specifications for the filtration control devices, as specified by the requirements in §63.11519(c)(4), "What are my notification, recordkeeping, and reporting requirements?"

(ii) You must implement the management practices to minimize emissions of MFHAP as specified in paragraphs (a)(2)(ii)(A) through (C) of this section.

(A) You must take measures necessary to minimize excess dust in the surrounding area to reduce MFHAP emissions, as practicable; and

(B) You must enclose dusty abrasive material storage areas and holding bins, seal chutes and conveyors that transport abrasive materials; and

(C) You must operate all equipment associated with dry abrasive blasting operations according to manufacturer's instructions.

(3) *Standards for dry abrasive blasting of objects greater than 8 feet (2.4 meters) in any one dimension.* If you own or operate a new or existing dry abrasive blasting affected source which consists of a dry abrasive blasting operation which is performed on objects greater than 8 feet (2.4 meters) in any one dimension, you may implement management practices to minimize emissions of MFHAP as specified in paragraph (a)(3)(i) of this section instead of the practices required by paragraph (a)(2) of this section. You must demonstrate that management practices are being implemented by complying with the requirements in paragraphs (a)(3)(ii) through (iv) of this section.

(i) Management practices for dry abrasive blasting of objects greater than 8 feet (2.4 meters) in any one dimension are specified in paragraphs (a)(3)(i)(A) through (E) of this section.

(A) You must take measures necessary to minimize excess dust in the surrounding area to reduce MFHAP emissions, as practicable; and

(B) You must enclose abrasive material storage areas and holding bins, seal chutes and conveyors that transport abrasive material; and

(C) You must operate all equipment associated with dry abrasive blasting operations according to manufacturer's instructions; and

(D) You must not re-use dry abrasive blasting media unless contaminants (i.e., any material other than the base metal, such as paint residue) have been removed by filtration or screening, and the abrasive material conforms to its original size; and

(E) Whenever practicable, you must switch from high particulate matter (PM)-emitting blast media (e.g., sand) to low PM-emitting blast media (e.g., crushed glass, specular hematite, steel shot, aluminum oxide), where PM is a surrogate for MFHAP.

(ii) You must perform visual determinations of fugitive emissions, as specified in §63.11517(b), "What are my monitoring requirements?", according to paragraphs (a)(3)(ii)(A) or (B) of this section, as applicable.

(A) For abrasive blasting of objects greater than 8 feet (2.4 meters) in any one dimension that is performed outdoors, you must perform visual determinations of fugitive emissions at the fenceline or property border nearest to the outdoor dry abrasive blasting operation.

(B) For abrasive blasting of objects greater than 8 feet (2.4 meters) in any one dimension that is performed indoors, you must perform visual determinations of fugitive emissions at the primary vent, stack, exit, or opening from the building containing the abrasive blasting operations.

(iii) You must keep a record of all visual determinations of fugitive emissions along with any corrective action taken in accordance with the requirements in §63.11519(c)(2), "What are my notification, recordkeeping, and reporting requirements?"

(iv) If visible fugitive emissions are detected, you must perform corrective actions until the visible fugitive emissions are eliminated, at which time you must comply with the requirements in paragraphs (a)(3)(iv)(A) and (B) of this section.

(A) You must perform a follow-up inspection for visible fugitive emissions in accordance with §63.11517(a), "Monitoring Requirements."

(B) You must report all instances where visible emissions are detected, along with any corrective action taken and the results of subsequent follow-up inspections for visible emissions, with your annual certification and compliance report as required by §63.11519(b)(5), "Notification, recordkeeping, and reporting requirements."

(b) *Standards for machining.* If you own or operate a new or existing machining affected source, you must implement management practices to minimize emissions of MFHAP as specified in paragraph (b)(1) and (2) of this section for each machining operation that uses

materials that contain MFHAP, as defined in §63.11522, "What definitions apply to this subpart?", or has the potential to emit MFHAP. These requirements do not apply when machining operations are being performed that do not use any materials containing MFHAP and do not have the potential to emit MFHAP.

(1) You must take measures necessary to minimize excess dust in the surrounding area to reduce MFHAP emissions, as practicable; and

(2) You must operate all equipment associated with machining according to manufacturer's instructions.

(c) *Standards for dry grinding and dry polishing with machines.* If you own or operate a new or existing dry grinding and dry polishing with machines affected source, you must comply with the requirements of paragraphs (c)(1) and (2) of this section for each dry grinding and dry polishing with machines operation that uses materials that contain MFHAP, as defined in §63.11522, "What definitions apply to this subpart?", or has the potential to emit MFHAP. These requirements do not apply when dry grinding and dry polishing operations are being performed that do not use any materials containing MFHAP and do not have the potential to emit MFHAP.

(1) You must capture emissions and vent them to a filtration control device. You must demonstrate compliance with this requirement by maintaining a record of the manufacturer's specifications for the filtration control devices, as specified by the requirements in §63.11519(c)(4), "Notification, recordkeeping, and reporting Requirements."

(2) You must implement management practices to minimize emissions of MFHAP as specified in paragraphs (c)(2)(i) and (ii) of this section.

(i) You must take measures necessary to minimize excess dust in the surrounding area to reduce MFHAP emissions, as practicable;

(ii) You must operate all equipment associated with the operation of dry grinding and dry polishing with machines, including the filtration control device, according to manufacturer's instructions.

(d) *Standards for control of MFHAP in spray painting.* If you own or operate a new or existing spray painting affected source, as defined in §63.11514 (b)(4), "Am I subject to this subpart?," you must implement the management practices in paragraphs (d)(1) through (9) of this section when a spray-applied paint that contains MFHAP is being applied. These requirements do not apply when spray-applied paints that do not contain MFHAP are being applied.

(1) *Standards for spray painting for MFHAP control.* All spray-applied painting of objects must meet the requirements of paragraphs (d)(1)(i) through (iii) of this section. These requirements do not apply to affected sources located at Fabricated Structural Metal Manufacturing facilities, as described in Table 1, "Description of Source Categories Affected by this Subpart," or affected sources that spray paint objects greater than 15 feet (4.57 meters), that are not spray painted in spray booths or spray rooms.

(i) Spray booths or spray rooms must have a full roof, at least two complete walls, and one or two complete side curtains or other barrier material so that all four sides are covered. The spray booths or spray rooms must be ventilated so that air is drawn into the booth and leaves only though the filter. The roof may contain narrow slots for connecting fabricated products to overhead cranes, and/or for cords or cables.

(ii) All spray booths or spray rooms must be fitted with a type of filter technology that is demonstrated to achieve at least 98 percent capture of MFHAP. The procedure used to demonstrate filter efficiency must be consistent with the American Society of Heating, Refrigerating, and Air-Conditioning Engineers (ASHRAE) Method 52.1, "Gravimetric and Dust-Spot Procedures for Testing Air-Cleaning Devices Used in General Ventilation for Removing Particulate Matter, June 4, 1992" (incorporated by reference, see §63.14). The test coating for measuring filter efficiency shall be a high-solids bake enamel delivered at a rate of at least 135 grams per minute from a conventional (non-High Volume Low Pressure) air-atomized spray gun operating at 40 psi air pressure; the air flow rate across the filter shall be 150 feet per minute. Owners and operators may use published filter efficiency data provided by filter vendors to demonstrate compliance with this requirement and are not required to perform this measurement.

(iii) You must perform regular inspection and replacement of the filters in all spray booths or spray rooms according to manufacturer's instructions, and maintain documentation of these activities, as detailed in §63.11519(c)(5), "Notification, recordkeeping, and reporting requirements."

(iv) As an alternative compliance requirement, spray booths or spray rooms equipped with a water curtain, called "waterwash" or "waterspray" booths or spray rooms that are operated and maintained according to the manufacturer's specifications and that achieve at least 98 percent control of MFHAP, may be used in lieu of the spray booths or spray rooms requirements of paragraphs (d)(1)(i) through (iii) of this section.

(2) *Standards for spray painting application equipment of all objects painted for MFHAP control.* All paints applied via spray-applied painting must be applied with a high-volume, low-pressure (HVLP) spray gun, electrostatic application, airless spray gun, air-assisted airless spray gun, or an equivalent technology that is demonstrated to achieve transfer efficiency comparable to one of these spray gun technologies for a comparable operation, and for which written approval has been obtained from the Administrator. The procedure used to demonstrate that spray gun transfer efficiency is equivalent to that of an HVLP spray gun must be equivalent to the California South Coast Air Quality Management District's "Spray Equipment Transfer Efficiency Test Procedure for Equipment User, May 24, 1989" and "Guidelines for Demonstrating Equivalency with District Approved Transfer Efficient Spray Guns, September 26, 2002", Revision 0 (incorporated by reference, see §63.14).

(3) *Spray system recordkeeping.* You must maintain documentation of the HVLP or other high transfer efficiency spray paint delivery methods, as detailed in §63.11519(c)(7), "Notification, recordkeeping, and reporting requirements."

(4) *Spray gun cleaning.* All cleaning of paint spray guns must be done with either non-HAP gun cleaning solvents, or in such a manner that an atomized mist of spray of gun cleaning solvent and paint residue is not created outside of a container that collects the used gun cleaning solvent. Spray gun cleaning may be done with, for example, by hand cleaning of parts of the disassembled gun in a container of solvent, by flushing solvent through the gun without atomizing the solvent and paint residue, or by using a fully enclosed spray gun washer. A combination of these non-atomizing methods may also be used.

(5) *Spray painting worker certification.* All workers performing painting must be certified that they have completed training in the proper spray application of paints and the proper setup and maintenance of spray equipment. The minimum requirements for training and certification are described in paragraph (d)(6) of this section. The spray application of paint is prohibited by persons who are not certified as having completed the training described in paragraph (d)(6) of this section. The requirements of this paragraph do not apply to the students of an accredited painting training program who are under the direct supervision of an instructor who meets the requirements of this paragraph. The requirements of this paragraph do not apply to operators of robotic or automated painting operations.

(6) *Spray painting training program content.* Each owner or operator of an affected spray painting affected source must ensure and certify that all new and existing personnel, including contract personnel, who spray apply paints are trained in the proper application of paints as required by paragraph (d)(5) of this section. The training program must include, at a minimum, the items listed in paragraphs (d)(6)(i) through (iii) of this section.

(i) A list of all current personnel by name and job description who are required to be trained;

(ii) Hands-on, or in-house or external classroom instruction that addresses, at a minimum, initial and refresher training in the topics listed in paragraphs (d)(6)(ii)(A) through (D) of this section.

(A) Spray gun equipment selection, set up, and operation, including measuring paint viscosity, selecting the proper fluid tip or nozzle, and achieving the proper spray pattern, air pressure and volume, and fluid delivery rate.

(B) Spray technique for different types of paints to improve transfer efficiency and minimize paint usage and overspray, including maintaining the correct spray gun distance and angle to the part, using proper banding and overlap, and reducing lead and lag spraying at the beginning and end of each stroke.

(C) Routine spray booth and filter maintenance, including filter selection and installation.

(D) Environmental compliance with the requirements of this subpart.

(iii) A description of the methods to be used at the completion of initial or refresher training to demonstrate, document, and provide certification of successful completion of the required

training. Alternatively, owners and operators who can show by documentation or certification that a painter's work experience and/or training has resulted in training equivalent to the training required in paragraph (d)(6)(ii) of this section are not required to provide the initial training required by that paragraph to these painters.

(7) *Records of spray painting training.* You must maintain records of employee training certification for use of HVLP or other high transfer efficiency spray paint delivery methods as detailed in §63.11519(c)(8), "Notification, recordkeeping, and reporting requirements."

(8) *Spray painting training dates.* As required by paragraph (d)(5) of this section, all new and existing personnel at an affected spray painting affected source, including contract personnel, who spray apply paints must be trained by the dates specified in paragraphs (d)(8)(i) and (ii) of this section.

(i) If your source is a new source, all personnel must be trained and certified no later than January 20, 2009, 180 days after startup, or 180 days after hiring, whichever is later. Training that was completed within 5 years prior to the date training is required, and that meets the requirements specified in paragraph (d)(6)(ii) of this section satisfies this requirement and is valid for a period not to exceed 5 years after the date the training is completed.

(ii) If your source is an existing source, all personnel must be trained and certified no later than July 25, 2011, or 180 days after hiring, whichever is later. Worker training that was completed within 5 years prior to the date training is required, and that meets the requirements specified in paragraph (d)(6)(ii) of this section, satisfies this requirement and is valid for a period not to exceed 5 years after the date the training is completed.

(9) *Duration of training validity.* Training and certification will be valid for a period not to exceed 5 years after the date the training is completed. All personnel must receive refresher training that meets the requirements of this section and be re-certified every 5 years.

(e) [Reserved]

(f) *Standards for welding.* If you own or operate a new or existing welding affected source, you must comply with the requirements in paragraphs (f)(1) and (2) of this section for each welding operation that uses materials that contain MFHAP, as defined in §63.11522, "What definitions apply to this subpart?", or has the potential to emit MFHAP. If your welding affected source uses 2,000 pounds or more per year of welding rod containing one or more MFHAP (calculated on a rolling 12-month basis), you must demonstrate that management practices or fume control measures are being implemented by complying with the requirements in paragraphs (f)(3) through (8) of this section. The requirements in paragraphs (f)(1) through (8) of this section do not apply when welding operations are being performed that do not use any materials containing MFHAP or do not have the potential to emit MFHAP.

(1) You must operate all equipment, capture, and control devices associated with welding operations according to manufacturer's instructions. You must demonstrate compliance with this requirement by maintaining a record of the manufacturer's specifications for the capture and

control devices, as specified by the requirements in §63.11519(c)(4), "Notification, recordkeeping, and reporting requirements."

(2) You must implement one or more of the management practices specified in paragraphs (f)(2)(i) through (v) of this section to minimize emissions of MFHAP, as practicable, while maintaining the required welding quality through the application of sound engineering judgment.

(i) Use welding processes with reduced fume generation capabilities (e.g., gas metal arc welding (GMAW)—also called metal inert gas welding (MIG));

(ii) Use welding process variations (e.g., pulsed current GMAW), which can reduce fume generation rates;

(iii) Use welding filler metals, shielding gases, carrier gases, or other process materials which are capable of reduced welding fume generation;

(iv) Optimize welding process variables (e.g., electrode diameter, voltage, amperage, welding angle, shield gas flow rate, travel speed) to reduce the amount of welding fume generated; and

(v) Use a welding fume capture and control system, operated according to the manufacturer's specifications.

(3) *Tier 1 compliance requirements for welding.* You must perform visual determinations of welding fugitive emissions as specified in §63.11517(b), "Monitoring requirements," at the primary vent, stack, exit, or opening from the building containing the welding operations. You must keep a record of all visual determinations of fugitive emissions along with any corrective action taken in accordance with the requirements in §63.11519(c)(2), "Notification, recordkeeping, and reporting requirements."

(4) *Requirements upon initial detection of visible emissions from welding.* If visible fugitive emissions are detected during any visual determination required in paragraph (f)(3) of this section, you must comply with the requirements in paragraphs (f)(4)(i) and (ii) of this section.

(i) Perform corrective actions that include, but are not limited to, inspection of welding fume sources, and evaluation of the proper operation and effectiveness of the management practices or fume control measures implemented in accordance with paragraph (f)(2) of this section. After completing such corrective actions, you must perform a follow-up inspection for visible fugitive emissions in accordance with §63.11517(a), "Monitoring Requirements," at the primary vent, stack, exit, or opening from the building containing the welding operations.

(ii) Report all instances where visible emissions are detected, along with any corrective action taken and the results of subsequent follow-up inspections for visible emissions, and submit with your annual certification and compliance report as required by §63.11519(b)(5), "Notification, recordkeeping, and reporting requirements."

(5) *Tier 2 requirements upon subsequent detection of visible emissions.* If visible fugitive emissions are detected more than once during any consecutive 12 month period (notwithstanding the results of any follow-up inspections), you must comply with paragraphs (f)(5)(i) through (iv) of this section.

(i) Within 24 hours of the end of the visual determination of fugitive emissions in which visible fugitive emissions were detected, you must conduct a visual determination of emissions opacity, as specified in §63.11517(c), "Monitoring requirements," at the primary vent, stack, exit, or opening from the building containing the welding operations.

(ii) In lieu of the requirement of paragraph (f)(3) of this section to perform visual determinations of fugitive emissions with EPA Method 22, you must perform visual determinations of emissions opacity in accordance with §63.11517(d), "Monitoring Requirements," using EPA Method 9, at the primary vent, stack, exit, or opening from the building containing the welding operations.

(iii) You must keep a record of each visual determination of emissions opacity performed in accordance with paragraphs (f)(5)(i) or (ii) of this section, along with any subsequent corrective action taken, in accordance with the requirements in §63.11519(c)(3), "Notification, recordkeeping, and reporting requirements."

(iv) You must report the results of all visual determinations of emissions opacity performed in accordance with paragraphs (f)(5)(i) or (ii) of this section, along with any subsequent corrective action taken, and submit with your annual certification and compliance report as required by §63.11519(b)(6), "Notification, recordkeeping, and reporting requirements."

(6) *Requirements for opacities less than or equal to 20 percent but greater than zero.* For each visual determination of emissions opacity performed in accordance with paragraph (f)(5) of this section for which the average of the six-minute average opacities recorded is 20 percent or less but greater than zero, you must perform corrective actions, including inspection of all welding fume sources, and evaluation of the proper operation and effectiveness of the management practices or fume control measures implemented in accordance with paragraph (f)(2) of this section.

(7) *Tier 3 requirements for opacities exceeding 20 percent.* For each visual determination of emissions opacity performed in accordance with paragraph (f)(5) of this section for which the average of the six-minute average opacities recorded exceeds 20 percent, you must comply with the requirements in paragraphs (f)(7)(i) through (v) of this section.

(i) You must submit a report of exceedence of 20 percent opacity, along with your annual certification and compliance report, as specified in §63.11519(b)(8), "Notification, recordkeeping, and reporting requirements," and according to the requirements of §63.11519(b)(1), "Notification, recordkeeping, and reporting requirements."

(ii) Within 30 days of the opacity exceedence, you must prepare and implement a Site-Specific Welding Emissions Management Plan, as specified in paragraph (f)(8) of this section. If

you have already prepared a Site-Specific Welding Emissions Management Plan in accordance with this paragraph, you must prepare and implement a revised Site-Specific Welding Emissions Management Plan within 30 days.

(iii) During the preparation (or revision) of the Site-Specific Welding Emissions Management Plan, you must continue to perform visual determinations of emissions opacity, beginning on a daily schedule as specified in §63.11517(d), "Monitoring Requirements," using EPA Method 9, at the primary vent, stack, exit, or opening from the building containing the welding operations.

(iv) You must maintain records of daily visual determinations of emissions opacity performed in accordance with paragraph (f)(7)(iii) of this section, during preparation of the Site-Specific Welding Emissions Management Plan, in accordance with the requirements in §63.11519(b)(9), "Notification, recordkeeping, and reporting requirements."

(v) You must include these records in your annual certification and compliance report, according to the requirements of §63.11519(b)(1), "Notification, recordkeeping, and reporting requirements."

(8) *Site-Specific Welding Emissions Management Plan.* The Site-Specific Welding Emissions Management Plan must comply with the requirements in paragraphs (f)(8)(i) through (iii) of this section.

(i) Site-Specific Welding Emissions Management Plan must contain the information in paragraphs (f)(8)(i)(A) through (F) of this section.

(A) Company name and address;

(B) A list and description of all welding operations which currently comprise the welding affected source;

(C) A description of all management practices and/or fume control methods in place at the time of the opacity exceedence;

(D) A list and description of all management practices and/or fume control methods currently employed for the welding affected source;

(E) A description of additional management practices and/or fume control methods to be implemented pursuant to paragraph (f)(7)(ii) of this section, and the projected date of implementation; and

(F) Any revisions to a Site-Specific Welding Emissions Management Plan must contain copies of all previous plan entries, pursuant to paragraphs (f)(8)(i)(D) and (E) of this section.

(ii) The Site-Specific Welding Emissions Management Plan must be updated annually to contain current information, as required by paragraphs (f)(8)(i)(A) through (C) of this section,

and submitted with your annual certification and compliance report, according to the requirements of §63.11519(b)(1), "Notification, recordkeeping, and reporting requirements."

(iii) You must maintain a copy of the current Site-Specific Welding Emissions Management Plan in your records in a readily-accessible location for inspector review, in accordance with the requirements in §63.11519(c)(12), "Notification, recordkeeping, and reporting requirements."

§63.11517 What are my monitoring requirements?

(a) *Visual determination of fugitive emissions, general.* Visual determination of fugitive emissions must be performed according to the procedures of EPA Method 22, of 40 CFR part 60, Appendix A-7. You must conduct the EPA Method 22 test while the affected source is operating under normal conditions. The duration of each EPA Method 22 test must be at least 15 minutes, and visible emissions will be considered to be present if they are detected for more than six minutes of the fifteen minute period.

(b) *Visual determination of fugitive emissions, graduated schedule.* Visual determinations of fugitive emissions must be performed in accordance with paragraph (a) of this section and according to the schedule in paragraphs (b)(1) through (4) of this section.

(1) *Daily Method 22 Testing.* Perform visual determination of fugitive emissions once per day, on each day the process is in operation, during operation of the process.

(2) *Weekly Method 22 Testing.* If no visible fugitive emissions are detected in consecutive daily EPA Method 22 tests, performed in accordance with paragraph (b)(1) of this section for 10 days of work day operation of the process, you may decrease the frequency of EPA Method 22 testing to once every five days of operation of the process (one calendar week). If visible fugitive emissions are detected during these tests, you must resume EPA Method 22 testing of that operation once per day during each day that the process is in operation, in accordance with paragraph (b)(1) of this section.

(3) *Monthly Method 22 Testing.* If no visible fugitive emissions are detected in four consecutive weekly EPA Method 22 tests performed in accordance with paragraph (b)(2) of this section, you may decrease the frequency of EPA Method 22 testing to once per 21 days of operation of the process (one calendar month). If visible fugitive emissions are detected during these tests, you must resume weekly EPA Method 22 in accordance with paragraph (b)(2) of this section.

(4) *Quarterly Method 22 Testing.* If no visible fugitive emissions are detected in three consecutive monthly EPA Method 22 tests performed in accordance with paragraph (b)(3) of this section, you may decrease the frequency of EPA Method 22 testing to once per 60 days of operation of the process (3 calendar months). If visible fugitive emissions are detected during these tests, you must resume monthly EPA Method 22 in accordance with paragraph (b)(3) of this section.

(c) *Visual determination of emissions opacity for welding Tier 2 or 3, general.* Visual determination of emissions opacity must be performed in accordance with the procedures of EPA Method 9, of 40 CFR part 60, Appendix A-4, and while the affected source is operating under normal conditions. The duration of the EPA Method 9 test shall be thirty minutes.

(d) *Visual determination of emissions opacity for welding Tier 2 or 3, graduated schedule.* You must perform visual determination of emissions opacity in accordance with paragraph (c) of this section and according to the schedule in paragraphs (d)(1) through (5) of this section.

(1) *Daily Method 9 testing for welding, Tier 2 or 3.* Perform visual determination of emissions opacity once per day during each day that the process is in operation.

(2) *Weekly Method 9 testing for welding, Tier 2 or 3.* If the average of the six minute opacities recorded during any of the daily consecutive EPA Method 9 tests performed in accordance with paragraph (d)(1) of this section does not exceed 20 percent for 10 days of operation of the process, you may decrease the frequency of EPA Method 9 testing to once per five days of consecutive work day operation. If opacity greater than 20 percent is detected during any of these tests, you must resume testing every day of operation of the process according to the requirements of paragraph (d)(1) of this section.

(3) *Monthly Method 9 testing for welding Tier 2 or 3.* If the average of the six minute opacities recorded during any of the consecutive weekly EPA Method 9 tests performed in accordance with paragraph (d)(2) of this section does not exceed 20 percent for four consecutive weekly tests, you may decrease the frequency of EPA Method 9 testing to once per every 21 days of operation of the process. If visible emissions opacity greater than 20 percent is detected during any monthly test, you must resume testing every five days of operation of the process according to the requirements of paragraph (d)(2) of this section.

(4) *Quarterly Method 9 testing for welding Tier 2 or 3.* If the average of the six minute opacities recorded during any of the consecutive weekly EPA Method 9 tests performed in accordance with paragraph (d)(3) of this section does not exceed 20 percent for three consecutive monthly tests, you may decrease the frequency of EPA Method 9 testing to once per every 120 days of operation of the process. If visible emissions opacity greater than 20 percent is detected during any quarterly test, you must resume testing every 21 days (month) of operation of the process according to the requirements of paragraph (d)(3) of this section.

(5) *Return to Method 22 testing for welding, Tier 2 or 3.* If, after two consecutive months of testing, the average of the six minute opacities recorded during any of the monthly EPA Method 9 tests performed in accordance with paragraph (d)(3) of this section does not exceed 20 percent, you may resume EPA Method 22 testing as in paragraphs (b)(3) and (4) of this section. In lieu of this, you may elect to continue performing EPA Method 9 tests in accordance with paragraphs (d)(3)and (4) of this section.

§63.11519 What are my notification, recordkeeping, and reporting requirements?

(a) *What notifications must I submit?*—(1) *Initial notification.* If you are the owner or operator of an area source in one of the nine metal fabrication and finishing source categories, as defined in §63.11514 "Am I subject to this subpart?," you must submit the Initial Notification required by §63.9(b) "General Provisions," for a new affected source no later than 120 days after initial startup or November 20, 2008, whichever is later. For an existing affected source, you must submit the Initial Notification no later than July 25, 2011. Your Initial Notification must provide the information specified in paragraphs (a)(1)(i) through (iv) of this section.

(i) The name, address, phone number and e-mail address of the owner and operator;

(ii) The address (physical location) of the affected source;

(iii) An identification of the relevant standard (i.e., this subpart); and

(iv) A brief description of the type of operation. For example, a brief characterization of the types of products (e.g., aerospace components, sports equipment, etc.), the number and type of processes, and the number of workers usually employed.

(2) *Notification of compliance status.* If you are the owner or operator of an existing affected source, you must submit a notification of compliance status on or before November 22, 2011. If you are the owner or operator of a new affected source, you must submit a notification of compliance status within 120 days after initial startup, or by November 20, 2008, whichever is later. You are required to submit the information specified in paragraphs (a)(2)(i) through (iv) of this section with your notification of compliance status:

(i) Your company's name and address;

(ii) A statement by a responsible official with that official's name, title, phone number, e-mail address and signature, certifying the truth, accuracy, and completeness of the notification and a statement of whether the source has complied with all the relevant standards and other requirements of this subpart;

(iii) If you operate any spray painting affected sources, the information required by §63.11516(e)(3)(vi)(C), "Compliance demonstration," or §63.11516(e)(4)(ix)(C), "Compliance demonstration," as applicable; and

(iv) The date of the notification of compliance status.

(b) *What reports must I prepare or submit?*—(1) *Annual certification and compliance reports.* You must prepare and submit annual certification and compliance reports for each affected source according to the requirements of paragraphs (b)(2) through (7) of this section. The annual certification and compliance reporting requirements may be satisfied by reports required under other parts of the CAA, as specified in paragraph (b)(3) of this section.

(2) *Dates.* Unless the Administrator has approved or agreed to a different schedule for submission of reports under §63.10(a), "General Provisions," you must prepare and submit each

annual certification and compliance report according to the dates specified in paragraphs (b)(2)(i) through (iii) of this section. Note that the information reported for each of the months in the reporting period will be based on the last 12 months of data prior to the date of each monthly calculation.

(i) The first annual certification and compliance report must cover the first annual reporting period which begins the day after the compliance date and ends on December 31.

(ii) Each subsequent annual certification and compliance report must cover the subsequent semiannual reporting period from January 1 through December 31.

(iii) Each annual certification and compliance report must be prepared and submitted no later than January 31 and kept in a readily-accessible location for inspector review. If an exceedence has occurred during the year, each annual certification and compliance report must be submitted along with the exceedence reports, and postmarked or delivered no later than January 31.

(3) *Alternate dates.* For each affected source that is subject to permitting regulations pursuant to 40 CFR part 70 or 40 CFR part 71, "Title V."

(i) If the permitting authority has established dates for submitting annual reports pursuant to 40 CFR 70.6(a)(3)(iii)(A) or 40 CFR 71.6(a)(3)(iii)(A), "Title V," you may prepare or submit, if required, the first and subsequent compliance reports according to the dates the permitting authority has established instead of according to the date specified in paragraph (b)(2)(iii) of this section.

(ii) If an affected source prepares or submits an annual certification and compliance report pursuant to this section along with, or as part of, the monitoring report required by 40 CFR 70.6(a)(3)(iii)(A) or 40 CFR 71.6(a)(3)(iii)(A), "Title V," and the compliance report includes all required information concerning exceedences of any limitation in this subpart, its submission will be deemed to satisfy any obligation to report the same exceedences in the annual monitoring report. However, submission of an annual certification and compliance report shall not otherwise affect any obligation the affected source may have to report deviations from permit requirements to the permitting authority.

(4) *General requirements.* The annual certification and compliance report must contain the information specified in paragraphs (b)(4)(i) through (iii) of this section, and the information specified in paragraphs (b)(5) through (7) of this section that is applicable to each affected source.

(i) Company name and address;

(ii) Statement by a responsible official with that official's name, title, and signature, certifying the truth, accuracy, and completeness of the content of the report; and

(iii) Date of report and beginning and ending dates of the reporting period. The reporting period is the 12-month period ending on December 31. Note that the information reported for the 12 months in the reporting period will be based on the last 12 months of data prior to the date of each monthly calculation.

(5) *Visual determination of fugitive emissions requirements.* The annual certification and compliance report must contain the information specified in paragraphs (b)(5)(i) through (iii) of this section for each affected source which performs visual determination of fugitive emissions in accordance with §63.11517(a), "Monitoring requirements."

(i) The date of every visual determination of fugitive emissions which resulted in detection of visible emissions;

(ii) A description of the corrective actions taken subsequent to the test; and

(iii) The date and results of the follow-up visual determination of fugitive emissions performed after the corrective actions.

(6) *Visual determination of emissions opacity requirements.* The annual certification and compliance report must contain the information specified in paragraphs (b)(6)(i) through (iii) of this section for each affected source which performs visual determination of emissions opacity in accordance with §63.11517(c), "Monitoring requirements."

(i) The date of every visual determination of emissions opacity;

(ii) The average of the six-minute opacities measured by the test; and

(iii) A description of any corrective action taken subsequent to the test.

(7) [Reserved]

(8) *Exceedences of 20 percent opacity for welding affected sources.* As required by §63.11516(f)(7)(i), "Requirements for opacities exceeding 20 percent," you must prepare an exceedence report whenever the average of the six-minute average opacities recorded during a visual determination of emissions opacity exceeds 20 percent. This report must be submitted along with your annual certification and compliance report according to the requirements in paragraph (b)(1) of this section, and must contain the information in paragraphs (b)(8)(iii)(A) and (B) of this section.

(A) The date on which the exceedence occurred; and

(B) The average of the six-minute average opacities recorded during the visual determination of emissions opacity.

(9) *Site-specific Welding Emissions Management Plan reporting.* You must submit a copy of the records of daily visual determinations of emissions recorded in accordance with

§63.11516(f)(7)(iv), "Tier 3 requirements for opacities exceeding 20 percent," and a copy of your Site-Specific Welding Emissions Management Plan and any subsequent revisions to the plan pursuant to §63.11516(f)(8), "Site-specific Welding Emission Management Plan," along with your annual certification and compliance report, according to the requirements in paragraph (b)(1) of this section.

(c) *What records must I keep?* You must collect and keep records of the data and information specified in paragraphs (c)(1) through (13) of this section, according to the requirements in paragraph (c)(14) of this section.

(1) *General compliance and applicability records.* Maintain information specified in paragraphs (c)(1)(i) through (ii) of this section for each affected source.

(i) Each notification and report that you submitted to comply with this subpart, and the documentation supporting each notification and report.

(ii) Records of the applicability determinations as in §63.11514(b)(1) through (5), "Am I subject to this subpart," listing equipment included in its affected source, as well as any changes to that and on what date they occurred, must be maintained for 5 years and be made available for inspector review at any time.

(2) *Visual determination of fugitive emissions records.* Maintain a record of the information specified in paragraphs (c)(2)(i) through (iii) of this section for each affected source which performs visual determination of fugitive emissions in accordance with §63.11517(a), "Monitoring requirements."

(i) The date and results of every visual determination of fugitive emissions;

(ii) A description of any corrective action taken subsequent to the test; and

(iii) The date and results of any follow-up visual determination of fugitive emissions performed after the corrective actions.

(3) *Visual determination of emissions opacity records.* Maintain a record of the information specified in paragraphs (c)(3)(i) through (iii) of this section for each affected source which performs visual determination of emissions opacity in accordance with §63.11517(c), "Monitoring requirements."

(i) The date of every visual determination of emissions opacity; and

(ii) The average of the six-minute opacities measured by the test; and

(iii) A description of any corrective action taken subsequent to the test.

(4) Maintain a record of the manufacturer's specifications for the control devices used to comply with §63.11516, "What are my standards and management practices?"

(5) *Spray paint booth filter records.* Maintain a record of the filter efficiency demonstrations and spray paint booth filter maintenance activities, performed in accordance with §63.11516(d)(1)(ii) and (iii), "Requirements for spray painting objects in spray booths or spray rooms."

(6) Waterspray booth or water curtain efficiency tests. Maintain a record of the water curtain efficiency demonstrations performed in accordance with §63.11516(d)(1)(ii), "Requirements for spray painting objects in spray booths or spray rooms."

(7) *HVLP or other high transfer efficiency spray delivery system documentation records.* Maintain documentation of HVLP or other high transfer efficiency spray paint delivery systems, in compliance with §63.11516(d)(3), "Requirements for spray painting of all objects." This documentation must include the manufacturer's specifications for the equipment and any manufacturer's operation instructions. If you have obtained written approval for an alternative spray application system in accordance with §63.11516(d)(2), "Spray painting of all objects," you must maintain a record of that approval along with documentation of the demonstration of equivalency.

(8) *HVLP or other high transfer efficiency spray delivery system employee training documentation records.* Maintain certification that each worker performing spray painting operations has completed the training specified in §63.11516(d)(6), "Requirements for spray painting of all objects," with the date the initial training and the most recent refresher training was completed.

(9)-(10) [Reserved]

(11) *Visual determination of emissions opacity performed during the preparation (or revision) of the Site-Specific Welding Emissions Management Plan.* You must maintain a record of each visual determination of emissions opacity performed during the preparation (or revision) of a Site-Specific Welding Emissions Management Plan, in accordance with §63.11516(f)(7)(iii), "Requirements for opacities exceeding 20 percent."

(12) *Site-Specific Welding Emissions Management Plan.* If you have been required to prepare a plan in accordance with §63.11516(f)(7)(iii), "Site-Specific Welding Emissions Management Plan," you must maintain a copy of your current Site-Specific Welding Emissions Management Plan in your records and it must be readily available for inspector review.

(13) *Manufacturer's instructions.* If you comply with this subpart by operating any equipment according to manufacturer's instruction, you must keep these instructions readily available for inspector review.

(14) Welding Rod usage. If you operate a new or existing welding affected source which is not required to comply with the requirements of §63.11516(f)(3) through (8) because it uses less than 2,000 pounds per year of welding rod (on a rolling 12-month basis), you must maintain records demonstrating your welding rod usage on a rolling 12-month basis.

(15) Your records must be maintained according to the requirements in paragraphs (c)(14)(i) through (iii) of this section.

(i) Your records must be in a form suitable and readily available for expeditious review, according to §63.10(b)(1), "General Provisions." Where appropriate, the records may be maintained as electronic spreadsheets or as a database.

(ii) As specified in §63.10(b)(1), "General Provisions," you must keep each record for 5 years following the date of each occurrence, measurement, corrective action, report, or record.

(iii) You must keep each record on-site for at least 2 years after the date of each occurrence, measurement, corrective action, report, or record according to §63.10(b)(1), "General Provisions." You may keep the records off-site for the remaining 3 years.

OTHER REQUIREMENTS AND INFORMATION

§63.11521 Who implements and enforces this subpart?

(a) This subpart can be implemented and enforced by EPA or a delegated authority such as your state, local, or tribal agency. If the EPA Administrator has delegated authority to your state, local, or tribal agency, then that agency, in addition to EPA, has the authority to implement and enforce this subpart. You should contact your EPA Regional Office to find out if implementation and enforcement of this subpart is delegated to your state, local, or tribal agency.

(b) In delegating implementation and enforcement authority of this subpart to a state, local, or tribal agency under 40 CFR part 63, subpart E, the authorities contained in paragraph (c) of this section are retained by the EPA Administrator and are not transferred to the state, local, or tribal agency.

(c) The authorities that cannot be delegated to state, local, or tribal agencies are specified in paragraphs (c)(1) through (5) of this section.

(1) Approval of an alternative non-opacity emissions standard under §63.6(g), of the General Provisions of this part.

(2) Approval of an alternative opacity emissions standard under §63.6(h)(9), of the General Provisions of this part.

(3) Approval of a major change to test methods under §63.7(e)(2)(ii) and (f), of the General Provisions of this part. A "major change to test method" is defined in §63.90.

(4) Approval of a major change to monitoring under §63.8(f), of the General Provisions of this part. A "major change to monitoring" under is defined in §63.90.

(5) Approval of a major change to recordkeeping and reporting under §63.10(f), of the General Provisions of this part. A "major change to recordkeeping/reporting" is defined in §63.90.

§63.11522 What definitions apply to this subpart?

The terms used in this subpart are defined in the CAA; and in this section as follows:

Adequate emission capture methods are hoods, enclosures, or any other duct intake devices with ductwork, dampers, manifolds, plenums, or fans designed to draw greater than 85 percent of the airborne dust generated from the process into the control device.

Capture system means the collection of components used to capture gases and fumes released from one or more emissions points and then convey the captured gas stream to a control device or to the atmosphere. A capture system may include, but is not limited to, the following components as applicable to a given capture system design: duct intake devices, hoods, enclosures, ductwork, dampers, manifolds, plenums, and fans.

Cartridge collector means a type of control device that uses perforated metal cartridges containing a pleated paper or non-woven fibrous filter media to remove PM from a gas stream by sieving and other mechanisms. Cartridge collectors can be designed with single use cartridges, which are removed and disposed after reaching capacity, or continuous use cartridges, which typically are cleaned by means of a pulse-jet mechanism.

Confined abrasive blasting enclosure means an enclosure that includes a roof and at least two complete walls, with side curtains and ventilation as needed to insure that no air or PM exits the enclosure while dry abrasive blasting is performed. Apertures or slots may be present in the roof or walls to allow for mechanized transport of the blasted objects with overhead cranes, or cable and cord entry into the dry abrasive blasting chamber.

Control device means equipment installed on a process vent or exhaust system that reduces the quantity of a pollutant that is emitted to the air.

Dry abrasive blasting means cleaning, polishing, conditioning, removing or preparing a surface by propelling a stream of abrasive material with compressed air against the surface. Hydroblasting, wet abrasive blasting, or other abrasive blasting operations which employ liquids to reduce emissions are not dry abrasive blasting.

Dry grinding and dry polishing with machines means grinding or polishing without the use of lubricating oils or fluids in fixed or stationary machines. Hand grinding, hand polishing, and bench top dry grinding and dry polishing are not included under this definition.

Fabric filter means a type of control device used for collecting PM by filtering a process exhaust stream through a filter or filter media; a fabric filter is also known as a baghouse.

Facility maintenance means operations performed as part of the routine repair or renovation of process equipment, machinery, control equipment, and structures that comprise the infrastructure of the affected facility and that are necessary for the facility to function in its intended capacity. Facility maintenance also includes operations associated with the installation of new equipment or structures, and any processes as part of janitorial activities. Facility

maintenance includes operations on stationary structures or their appurtenances at the site of installation, to portable buildings at the site of installation, to pavements, or to curbs. Facility maintenance also includes operations performed on mobile equipment, such as fork trucks, that are used in a manufacturing facility and which are maintained in that same facility. Facility maintenance does not include spray-applied coating of motor vehicles, mobile equipment, or items that routinely leave and return to the facility, such as delivery trucks, rental equipment, or containers used to transport, deliver, distribute, or dispense commercial products to customers, such as compressed gas canisters.

Filtration control device means a control device that utilizes a filter to reduce the emissions of MFHAP and other PM.

Grinding means a process performed on a workpiece to remove undesirable material from the surface or to remove burrs or sharp edges. Grinding is done using belts, disks, or wheels consisting of or covered with various abrasives.

Machining means dry metal turning, milling, drilling, boring, tapping, planing, broaching, sawing, cutting, shaving, shearing, threading, reaming, shaping, slotting, hobbing, and chamfering with machines. Shearing operations cut materials into a desired shape and size, while forming operations bend or conform materials into specific shapes. Cutting and shearing operations include punching, piercing, blanking, cutoff, parting, shearing and trimming. Forming operations include bending, forming, extruding, drawing, rolling, spinning, coining, and forging the metal. Processes specifically excluded are hand-held devices and any process employing fluids for lubrication or cooling.

Material containing MFHAP means a material containing one or more MFHAP. Any material that contains cadmium, chromium, lead, or nickel in amounts greater than or equal to 0.1 percent by weight (as the metal), and contains manganese in amounts greater than or equal to 1.0 percent by weight (as the metal), as shown in formulation data provided by the manufacturer or supplier, such as the Material Safety Data Sheet for the material, is considered to be a material containing MFHAP.

Metal fabrication and finishing HAP (MFHAP) means any compound of the following metals: Cadmium, chromium, lead, manganese, or nickel, or any of these metals in the elemental form, with the exception of lead.

Metal fabrication and finishing source categories are limited to the nine metal fabrication and finishing source categories with the activities described in Table 1, “Description of Source Categories Affected by this Subpart.” Metal fabrication or finishing operations means dry abrasive blasting, machining, spray painting, or welding in any one of the nine metal fabrication and finishing area source categories listed in Table 1, “Description of Source Categories Affected by this Subpart.”

Military munitions means all ammunition products and components produced or used by or for the U.S. Department of Defense (DoD) or for the U.S. Armed Services for national defense and security, including military munitions under the control of the DoD, the U.S. Coast Guard,

the National Nuclear Security Administration (NNSA), U.S. Department of Energy (DOE), and National Guard personnel. The term military munitions includes: Confined gaseous, liquid, and solid propellants, explosives, pyrotechnics, chemical and riot control agents, smokes, and incendiaries used by DoD components, including bulk explosives and chemical warfare agents, chemical munitions, biological weapons, rockets, guided and ballistic missiles, bombs, warheads, small arms ammunition, grenades, mines, torpedoes, depth charges, cluster munitions and dispensers, demolition charges, nonnuclear components of nuclear weapons, wholly inert ammunition products, and all devices and components of any items listed in this definition.

Paint means a material applied to a substrate for decorative, protective, or functional purposes. Such materials include, but are not limited to, paints, coatings, sealants, liquid plastic coatings, caulks, inks, adhesives, and maskants. Decorative, protective, or functional materials that consist only of protective oils for metal, acids, bases, or any combination of these substances, or paper film or plastic film which may be pre-coated with an adhesive by the film manufacturer, are not considered paints for the purposes of this subpart.

Polishing with machines means an operation which removes fine excess metal from a surface to prepare the surface for more refined finishing procedures prior to plating or other processes. Polishing may also be employed to remove burrs on castings or stampings. Polishing is performed using hard-faced wheels constructed of muslin, canvas, felt or leather, and typically employs natural or artificial abrasives. Polishing performed by hand without machines or in bench top operations are not considered polishing with machines for the purposes of this subpart.

Primarily engaged means the manufacturing, fabricating, or forging of one or more products listed in one of the nine metal fabrication and finishing source category descriptions in Table 1, "Description of Source Categories Affected by this Subpart," where this production represents at least 50 percent of the production at a facility, and where production quantities are established by the volume, linear foot, square foot, or other value suited to the specific industry. The period used to determine production should be the previous continuous 12 months of operation. Facilities must document and retain their rationale for the determination that their facility is not "primarily engaged" pursuant to §63.10(b)(3) of the General Provisions.

Quality control activities means operations that meet all of the following criteria:

(1) The activities are intended to detect and correct defects in the final product by selecting a limited number of samples from the operation, and comparing the samples against specific performance criteria.

(2) The activities do not include the production of an intermediate or final product for sale or exchange for commercial profit; for example, parts that are not sold and do not leave the facility.

(3) The activities are not a normal part of the operation;

(4) The activities do not involve fabrication of tools, equipment, machinery, and structures that comprise the infrastructure of the facility and that are necessary for the facility to function in its intended capacity; that is, the activities are not facility maintenance.

Responsible official means responsible official as defined in 40 CFR 70.2.

Spray-applied painting means application of paints using a hand-held device that creates an atomized mist of paint and deposits the paint on a substrate. For the purposes of this subpart, spray-applied painting does not include the following materials or activities:

(1) Paints applied from a hand-held device with a paint cup capacity that is less than 3.0 fluid ounces (89 cubic centimeters).

(2) Surface coating application using powder coating, hand-held, non-refillable aerosol containers, or non-atomizing application technology, including, but not limited to, paint brushes, rollers, hand wiping, flow coating, dip coating, electrodeposition coating, web coating, coil coating, touch-up markers, or marking pens.

(3) Painting operations that normally require the use of an airbrush or an extension on the spray gun to properly reach limited access spaces; the application of paints that contain fillers that adversely affect atomization with HVLP spray guns, and the application of paints that normally have a dried film thickness of less than 0.0013 centimeter (0.0005 in.).

(4) Thermal spray operations (also known as metallizing, flame spray, plasma arc spray, and electric arc spray, among other names) in which solid metallic or non-metallic material is heated to a molten or semi-molten state and propelled to the work piece or substrate by compressed air or other gas, where a bond is produced upon impact.

Spray booth or spray room means an enclosure with four sides and a roof where spray paint is prevented from leaving the booth during spraying by the enclosure. The roof of the spray booth or spray room may contain narrow slots for connecting the parts and products to overhead cranes, or for cord or cable entry into the spray booth or spray room.

Tool or equipment repair means equipment and devices used to repair or maintain process equipment or to prepare molds, dies, or other changeable elements of process equipment.

Totally enclosed and unvented means enclosed so that no air enters or leaves during operation.

Totally enclosed and unvented dry abrasive blasting chamber means a dry abrasive blasting enclosure which has no vents to the atmosphere, thus no emissions. A typical example of this sort of abrasive blasting enclosure is a small “glove box” enclosure, where the worker places their hands in openings or gloves that extend into the box and enable the worker to hold the objects as they are being blasted without allowing air and blast material to escape the box.

Vented dry abrasive blasting means dry abrasive blasting where the blast material is moved by air flow from within the chamber to outside the chamber into the atmosphere or into a control device.

Welding means a process which joins two metal parts by melting the parts at the joint and filling the space with molten metal.

Welding rod containing MFHAP means a welding rod that contains cadmium, chromium, lead, or nickel in amounts greater than or equal to 0.1 percent by weight (as the metal), or that contains manganese in amounts greater than or equal to 1.0 percent by weight (as the metal), as shown in formulation data provided by the manufacturer or supplier, such as the Material Safety Data Sheet for the welding rod.

§63.11523 What General Provisions apply to this subpart?

The provisions in 40 CFR part 63, subpart A, applicable to sources subject to §63.11514(a) are specified in Table 2 of this subpart.

Table 1 to Subpart XXXXXX of Part 63—Description of Source Categories Affected by This Subpart

Metal fabrication and finishing source category	Description
Electrical and Electronic Equipment Finishing Operations	Establishments primarily engaged in manufacturing motors and generators; and electrical machinery, equipment, and supplies, not elsewhere classified. The electrical machinery equipment and supplies industry sector of this source category includes establishments primarily engaged in high energy particle acceleration systems and equipment, electronic simulators, appliance and extension cords, bells and chimes, insect traps, and other electrical equipment and supplies not elsewhere classified. The motors and generators sector of this source category includes establishments primarily engaged in manufacturing electric motors (except engine starting motors) and power generators; motor generator sets; railway motors and control equipment; and motors, generators and control equipment for gasoline, electric, and oil-electric buses and trucks.
Fabricated Metal Products	Establishments primarily engaged in manufacturing fabricated metal products, such as fire or burglary resistive steel safes and vaults and similar fire or burglary resistive products; and collapsible tubes of thin flexible metal. Also, establishments primarily engaged in manufacturing powder metallurgy products, metal boxes; metal ladders; metal household articles, such as ice cream freezers and ironing boards; and other fabricated metal products not elsewhere classified.

Fabricated Plate Work (Boiler Shops)	Establishments primarily engaged in manufacturing power marine boilers, pressure and nonpressure tanks, processing and storage vessels, heat exchangers, weldments and similar products.
Fabricated Structural Metal Manufacturing	Establishments primarily engaged in fabricating iron and steel or other metal for structural purposes, such as bridges, buildings, and sections for ships, boats, and barges.
Heating Equipment, except Electric	Establishments primarily engaged in manufacturing heating equipment, except electric and warm air furnaces, including gas, oil, and stoker coal fired equipment for the automatic utilization of gaseous, liquid, and solid fuels. Products produced in this source category include low-pressure heating (steam or hot water) boilers, fireplace inserts, domestic (steam or hot water) furnaces, domestic gas burners, gas room heaters, gas infrared heating units, combination gas-oil burners, oil or gas swimming pool heaters, heating apparatus (except electric or warm air), kerosene space heaters, gas fireplace logs, domestic and industrial oil burners, radiators (except electric), galvanized iron nonferrous metal range boilers, room heaters (except electric), coke and gas burning salamanders, liquid or gas solar energy collectors, solar heaters, space heaters (except electric), mechanical (domestic and industrial) stokers, wood and coal-burning stoves, domestic unit heaters (except electric), and wall heaters (except electric).
Industrial Machinery and Equipment Finishing Operations	Establishments primarily engaged in construction machinery manufacturing; oil and gas field machinery manufacturing; and pumps and pumping equipment manufacturing. The construction machinery manufacturing industry sector of this source category includes establishments primarily engaged in manufacturing heavy machinery and equipment of types used primarily by the construction industries, such as bulldozers; concrete mixers; cranes, except industrial plant overhead and truck-type cranes; dredging machinery; pavers; and power shovels. Also establishments primarily engaged in manufacturing forestry equipment and certain specialized equipment, not elsewhere classified, similar to that used by the construction industries, such as elevating platforms, ship cranes, and capstans, aerial work platforms, and automobile wrecker hoists. The oil and gas field machinery manufacturing industry sector of this source category includes establishments primarily engaged in manufacturing machinery and equipment for use in oil and gas fields or for drilling water wells, including portable drilling rigs. The pumps and pumping equipment manufacturing sector of this source category includes establishments primarily engaged in manufacturing pumps and pumping equipment for general industrial, commercial, or household use, except fluid power pumps and motors. This category includes establishments primarily engaged in manufacturing domestic water and sump pumps.

Iron and Steel Forging	Establishments primarily engaged in the forging manufacturing process, where purchased iron and steel metal is pressed, pounded or squeezed under great pressure into high strength parts known as forgings. The forging process is different from the casting and foundry processes, as metal used to make forged parts is never melted and poured.
Primary Metals Products Manufacturing	Establishments primarily engaged in manufacturing products such as fabricated wire products (except springs) made from purchased wire. These facilities also manufacture steel balls; nonferrous metal brads and nails; nonferrous metal spikes, staples, and tacks; and other primary metals products not elsewhere classified.
Valves and Pipe Fittings	Establishments primarily engaged in manufacturing metal valves and pipe fittings; flanges; unions, with the exception of purchased pipes; and other valves and pipe fittings not elsewhere classified.

Table 2 to Subpart XXXXXX of Part 63—Applicability of General Provisions to Metal Fabrication or Finishing Area Sources

Instructions for Table 2—As required in §63.11523, "General Provisions Requirements," you must meet each requirement in the following table that applies to you.

Citation	**Subject**
63.1[1]	Applicability.
63.2	Definitions.
63.3	Units and abbreviations.
63.4	Prohibited activities.
63.5	Construction/reconstruction.
63.6(a), (b)(1)-(b)(5), (c)(1), (c)(2), (c)(5), (g), (i), (j)	Compliance with standards and maintenance requirements.
63.9(a)-(d)	Notification requirements.
63.10(a), (b) except for (b)(2), (d)(1), (d)(4)	Recordkeeping and reporting.
63.12	State authority and delegations.
63.13	Addresses of State air pollution control agencies and EPA regional offices.
63.14	Incorporation by reference.
63.15	Availability of information and confidentiality.

63.16	Performance track provisions.

[1]§63.11514(g), "Am I subject to this subpart?" exempts affected sources from the obligation to obtain title V operating permits.

40 CFR 63, Subpart YYYYY

National Emission Standard for Hazardous Air Pollutants for Area Sources: Electric Arc Furnace Steelmaking Facilities

§63.10680 Am I subject to this subpart?

(a) You are subject to this subpart if you own or operate an electric arc furnace (EAF) steelmaking facility that is an area source of hazardous air pollutant (HAP) emissions.

P. Kay Metal is not a steelmaking facility. This does not apply.

(b) This subpart applies to each new or existing affected source. The affected source is each EAF steelmaking facility.

P. Kay Metal is not a steelmaking facility. This does not apply.

(1) An affected source is existing if you commenced construction or reconstruction of the affected source on or before September 20, 2007.

(2) An affected source is new if you commenced construction or reconstruction of the affected source after September 20, 2007.

(c) This subpart does not apply to research and development facilities, as defined in section 112(c)(7) of the Clean Air Act (CAA).

(d) If you own or operate an area source subject to this subpart, you must have or obtain a permit under 40 CFR part 70 or 40 CFR part 71.

40 CFR 63 Subpart YYYYY does not apply to P. Kay Metal.

§63.10681 What are my compliance dates?

(a) Except as provided in paragraph (b) of this section, if you own or operate an existing affected source, you must achieve compliance with the applicable provisions of this subpart by no later than June 30, 2008.

(b) If you own or operate an existing affected source, you must achieve compliance with opacity limit in §63.10686(b)(2) or (c)(2) by no later than December 28, 2010 if you demonstrate to the satisfaction of the permitting authority that additional time is needed to install or modify emission control equipment.

(c) If you start up a new affected source on or before December 28, 2007, you must achieve compliance with the applicable provisions of this subpart by no later than December 28, 2007.

(d) If you start up a new affected source after December 28, 2007, you must achieve compliance with the applicable provisions of this subpart upon startup of your affected source.

§63.10685 What are the requirements for the control of contaminants from scrap?

(a) *Chlorinated plastics, lead, and free organic liquids.* For metallic scrap utilized in the EAF at your facility, you must comply with the requirements in either paragraph (a)(1) or (2) of this section. You may have certain scrap at your facility subject to paragraph (a)(1) of this section and other scrap subject to paragraph (a)(2) of this section provided the scrap remains segregated until charge make-up.

(1) *Pollution prevention plan.* For the production of steel other than leaded steel, you must prepare and implement a pollution prevention plan for metallic scrap selection and inspection to minimize the amount of chlorinated plastics, lead, and free organic liquids that is charged to the furnace. For the production of leaded steel, you must prepare and implement a pollution prevention plan for scrap selection and inspection to minimize the amount of chlorinated plastics and free organic liquids in the scrap that is charged to the furnace. You must submit the scrap pollution prevention plan to the permitting authority for approval. You must operate according to the plan as submitted during the review and approval process, operate according to the approved plan at all times after approval, and address any deficiency identified by the permitting authority within 60 days following disapproval of a plan. You may request approval to revise the plan and may operate according to the revised plan unless and until the revision is disapproved by the permitting authority. You must keep a copy of the plan onsite, and you must provide training on the plan's requirements to all plant personnel with materials acquisition or inspection duties. Each plan must include the information in paragraphs (a)(1)(i) through (iii) of this section:

(i) Specifications that scrap materials must be depleted (to the extent practicable) of undrained used oil filters, chlorinated plastics, and free organic liquids at the time of charging to the furnace.

(ii) A requirement in your scrap specifications for removal (to the extent practicable) of lead-containing components (such as batteries, battery cables, and wheel weights) from the scrap, except for scrap used to produce leaded steel.

(iii) Procedures for determining if the requirements and specifications in paragraph (a)(1) of this section are met (such as visual inspection or periodic audits of scrap providers) and procedures for taking corrective actions with vendors whose shipments are not within specifications.

(iv) The requirements of paragraph (a)(1) of this section do not apply to the routine recycling of baghouse bags or other internal process or maintenance materials in the furnace. These exempted materials must be identified in the pollution prevention plan.

(2) *Restricted metallic scrap.* For the production of steel other than leaded steel, you must not charge to a furnace metallic scrap that contains scrap from motor vehicle bodies, engine blocks, oil filters, oily turnings, machine shop borings, transformers or capacitors containing polychlorinated biphenyls, lead-containing components, chlorinated plastics, or free organic liquids. For the production of leaded steel, you must not charge to the furnace metallic scrap that

contains scrap from motor vehicle bodies, engine blocks, oil filters, oily turnings, machine shop borings, transformers or capacitors containing polychlorinated biphenyls, chlorinated plastics, or free organic liquids. This restriction does not apply to any post-consumer engine blocks, post-consumer oil filters, or oily turnings that are processed or cleaned to the extent practicable such that the materials do not include lead components, chlorinated plastics, or free organic liquids. This restriction does not apply to motor vehicle scrap that is charged to recover the chromium or nickel content if you meet the requirements in paragraph (b)(3) of this section.

(b) *Mercury requirements.* For scrap containing motor vehicle scrap, you must procure the scrap pursuant to one of the compliance options in paragraphs (b)(1), (2), or (3) of this section for each scrap provider, contract, or shipment. For scrap that does not contain motor vehicle scrap, you must procure the scrap pursuant to the requirements in paragraph (b)(4) of this section for each scrap provider, contract, or shipment. You may have one scrap provider, contract, or shipment subject to one compliance provision and others subject to another compliance provision.

(1) *Site-specific plan for mercury switches.* You must comply with the requirements in paragraphs (b)(1)(i) through (v) of this section.

(i) You must include a requirement in your scrap specifications for removal of mercury switches from vehicle bodies used to make the scrap.

(ii) You must prepare and operate according to a plan demonstrating how your facility will implement the scrap specification in paragraph (b)(1)(i) of this section for removal of mercury switches. You must submit the plan to the permitting authority for approval. You must operate according to this plan as submitted during the review and approval process, operate according to the approved plan at all times after approval, and address any deficiency identified by the permitting authority within 60 days following disapproval of a plan. You may request approval to revise the plan and may operate according to the revised plan unless and until the revision is disapproved by the permitting authority. The permitting authority may change the approval status of the plan upon 90-days written notice based upon the semiannual compliance report or other information. The plan must include:

(A) A means of communicating to scrap purchasers and scrap providers the need to obtain or provide motor vehicle scrap from which mercury switches have been removed and the need to ensure the proper management of the mercury switches removed from that scrap as required under the rules implementing subtitle C of the Resource Conservation and Recovery Act (RCRA) (40 CFR parts 261 through 265 and 268). The plan must include documentation of direction to appropriate staff to communicate to suppliers throughout the scrap supply chain the need to promote the removal of mercury switches from end-of-life vehicles. Upon the request of the permitting authority, you must provide examples of materials that are used for outreach to suppliers, such as letters, contract language, policies for purchasing agents, and scrap inspection protocols;

(B) Provisions for obtaining assurance from scrap providers that motor vehicle scrap provided to the facility meet the scrap specification;

(C) Provisions for periodic inspections or other means of corroboration to ensure that scrap providers and dismantlers are implementing appropriate steps to minimize the presence of mercury switches in motor vehicle scrap and that the mercury switches removed are being properly managed, including the minimum frequency such means of corroboration will be implemented; and

(D) Provisions for taking corrective actions (i.e., actions resulting in scrap providers removing a higher percentage of mercury switches or other mercury-containing components) if needed, based on the results of procedures implemented in paragraph (b)(1)(ii)(C) of this section).

(iii) You must require each motor vehicle scrap provider to provide an estimate of the number of mercury switches removed from motor vehicle scrap sent to your facility during the previous year and the basis for the estimate. The permitting authority may request documentation or additional information at any time.

(iv) You must establish a goal for each scrap provider to remove at least 80 percent of the mercury switches. Although a site-specific plan approved under paragraph (b)(1) of this section may require only the removal of convenience light switch mechanisms, the permitting authority will credit all documented and verifiable mercury-containing components removed from motor vehicle scrap (such as sensors in anti-locking brake systems, security systems, active ride control, and other applications) when evaluating progress towards the 80 percent goal.

(v) For each scrap provider, you must submit semiannual progress reports to the permitting authority that provide the number of mercury switches removed or the weight of mercury recovered from the switches, the estimated number of vehicles processed, an estimate of the percent of mercury switches removed, and certification that the removed mercury switches were recycled at RCRA-permitted facilities or otherwise properly managed pursuant to RCRA subtitle C regulations referenced in paragraph (b)(1)(ii)(A) of this section. This information can be submitted in aggregated form and does not have to be submitted for each scrap provider, contract, or shipment. The permitting authority may change the approval status of a site-specific plan following 90-days notice based on the progress reports or other information.

(2) *Option for approved mercury programs.* You must certify in your notification of compliance status that you participate in and purchase motor vehicle scrap only from scrap providers who participate in a program for removal of mercury switches that has been approved by the Administrator based on the criteria in paragraphs (b)(2)(i) through (iii) of this section. If you purchase motor vehicle scrap from a broker, you must certify that all scrap received from that broker was obtained from other scrap providers who participate in a program for the removal of mercury switches that has been approved by the Administrator based on the criteria in paragraphs (b)(2)(i) through (iii) of this section. The National Vehicle Mercury Switch Recovery Program and the Vehicle Switch Recovery Program mandated by Maine State law are EPA-approved programs under paragraph (b)(2) of this section unless and until the Administrator disapproves the program (in part or in whole) under paragraph (b)(2)(iii) of this section.

(i) The program includes outreach that informs the dismantlers of the need for removal of mercury switches and provides training and guidance for removing mercury switches;

(ii) The program has a goal to remove at least 80 percent of mercury switches from the motor vehicle scrap the scrap provider processes. Although a program approved under paragraph (b)(2) of this section may require only the removal of convenience light switch mechanisms, the Administrator will credit all documented and verifiable mercury-containing components removed from motor vehicle scrap (such as sensors in anti-locking brake systems, security systems, active ride control, and other applications) when evaluating progress towards the 80 percent goal; and

(iii) The program sponsor agrees to submit progress reports to the Administrator no less frequently than once every year that provide the number of mercury switches removed or the weight of mercury recovered from the switches, the estimated number of vehicles processed, an estimate of the percent of mercury switches recovered, and certification that the recovered mercury switches were recycled at facilities with permits as required under the rules implementing subtitle C of RCRA (40 CFR parts 261 through 265 and 268). The progress reports must be based on a database that includes data for each program participant; however, data may be aggregated at the State level for progress reports that will be publicly available. The Administrator may change the approval status of a program or portion of a program (e.g., at the State level) following 90-days notice based on the progress reports or on other information.

(iv) You must develop and maintain onsite a plan demonstrating the manner through which your facility is participating in the EPA-approved program.

(A) The plan must include facility-specific implementation elements, corporate-wide policies, and/or efforts coordinated by a trade association as appropriate for each facility.

(B) You must provide in the plan documentation of direction to appropriate staff to communicate to suppliers throughout the scrap supply chain the need to promote the removal of mercury switches from end-of-life vehicles. Upon the request of the permitting authority, you must provide examples of materials that are used for outreach to suppliers, such as letters, contract language, policies for purchasing agents, and scrap inspection protocols.

(C) You must conduct periodic inspections or provide other means of corroboration to ensure that scrap providers are aware of the need for and are implementing appropriate steps to minimize the presence of mercury in scrap from end-of-life vehicles.

(3) *Option for specialty metal scrap.* You must certify in your notification of compliance status that the only materials from motor vehicles in the scrap are materials recovered for their specialty alloy (including, but not limited to, chromium, nickel, molybdenum, or other alloys) content (such as certain exhaust systems) and, based on the nature of the scrap and purchase specifications, that the type of scrap is not reasonably expected to contain mercury switches.

(4) *Scrap that does not contain motor vehicle scrap.* For scrap not subject to the requirements in paragraphs (b)(1) through (3) of this section, you must certify in your

notification of compliance status and maintain records of documentation that this scrap does not contain motor vehicle scrap.

(c) *Recordkeeping and reporting requirements.* In addition to the records required by §63.10, you must keep records to demonstrate compliance with the requirements for your pollution prevention plan in paragraph (a)(1) of this section and/or for the use of only restricted scrap in paragraph (a)(2) of this section and for mercury in paragraphs (b)(1) through (3) of this section as applicable. You must keep records documenting compliance with paragraph (b)(4) of this section for scrap that does not contain motor vehicle scrap.

(1) If you are subject to the requirements for a site-specific plan for mercury under paragraph (b)(1) of this section, you must:

(i) Maintain records of the number of mercury switches removed or the weight of mercury recovered from the switches and properly managed, the estimated number of vehicles processed, and an estimate of the percent of mercury switches recovered; and

(ii) Submit semiannual reports of the number of mercury switches removed or the weight of mercury recovered from the switches and properly managed, the estimated number of vehicles processed, an estimate of the percent of mercury switches recovered, and a certification that the recovered mercury switches were recycled at RCRA-permitted facilities. The semiannual reports must include a certification that you have conducted inspections or taken other means of corroboration as required under paragraph (b)(1)(ii)(C) of this section. You may include this information in the semiannual compliance reports required under paragraph (c)(3) of this section.

(2) If you are subject to the option for approved mercury programs under paragraph (b)(2) of this section, you must maintain records identifying each scrap provider and documenting the scrap provider's participation in an approved mercury switch removal program. If you purchase motor vehicle scrap from a broker, you must maintain records identifying each broker and documentation that all scrap provided by the broker was obtained from other scrap providers who participate in an approved mercury switch removal program.

(3) You must submit semiannual compliance reports to the Administrator for the control of contaminants from scrap according to the requirements in §63.10(e). The report must clearly identify any deviation from the requirements in paragraphs (a) and (b) of this section and the corrective action taken. You must identify which compliance option in paragraph (b) of this section applies to each scrap provider, contract, or shipment.

§63.10686 What are the requirements for electric arc furnaces and argon-oxygen decarburization vessels?

(a) You must install, operate, and maintain a capture system that collects the emissions from each EAF (including charging, melting, and tapping operations) and argon-oxygen decarburization (AOD) vessel and conveys the collected emissions to a control device for the removal of particulate matter (PM).

(b) Except as provided in paragraph (c) of this section, you must not discharge or cause the discharge into the atmosphere from an EAF or AOD vessel any gases which:

(1) Exit from a control device and contain in excess of 0.0052 grains of PM per dry standard cubic foot (gr/dscf); and

(2) Exit from a melt shop and, due solely to the operations of any affected EAF(s) or AOD vessel(s), exhibit 6 percent opacity or greater.

(c) If you own or operate a new or existing affected source that has a production capacity of less than 150,000 tons per year (tpy) of stainless or specialty steel (as determined by the maximum production if specified in the source's operating permit or EAF capacity and maximum number of operating hours per year), you must not discharge or cause the discharge into the atmosphere from an EAF or AOD vessel any gases which:

(1) Exit from a control device and contain particulate matter (PM) in excess of 0.8 pounds per ton (lb/ton) of steel. Alternatively, the owner or operator may elect to comply with a PM limit of 0.0052 grains per dry standard cubic foot (gr/dscf); and

(2) Exit from a melt shop and, due solely to the operations of any affected EAF(s) or AOD vessel(s), exhibit 6 percent opacity or greater.

(d) Except as provided in paragraph (d)(6) of this section, you must conduct performance tests to demonstrate initial compliance with the applicable emissions limit for each emissions source subject to an emissions limit in paragraph (b) or (c) of this section.

(1) You must conduct each PM performance test for an EAF or AOD vessel according to the procedures in §63.7 and 40 CFR 60.275a using the following test methods in 40 CFR part 60, appendices A-1, A-2, A-3, and A-4:

(i) Method 1 or 1A of appendix A-1 of 40 CFR part 60 to select sampling port locations and the number of traverse points in each stack or duct. Sampling sites must be located at the outlet of the control device (or at the outlet of the emissions source if no control device is present) prior to any releases to the atmosphere.

(ii) Method 2, 2A, 2C, 2D, 2F, or 2G of appendix A-1 of 40 CFR part 60 to determine the volumetric flow rate of the stack gas.

(iii) Method 3, 3A, or 3B of appendix A-3 of 40 CFR part 60 to determine the dry molecular weight of the stack gas. You may use ANSI/ASME PTC 19.10-1981, “Flue and Exhaust Gas Analyses” (incorporated by reference—see §63.14) as an alternative to EPA Method 3B.

(iv) Method 4 of appendix A-3 of 40 CFR part 60 to determine the moisture content of the stack gas.

(v) Method 5 or 5D of appendix A-3 of 40 CFR part 60 to determine the PM concentration. Three valid test runs are needed to comprise a PM performance test. For EAF, sample only when metal is being melted and refined. For AOD vessels, sample only when the operation(s) are being conducted.

(2) You must conduct each opacity test for a melt shop according to the procedures in §63.6(h) and Method 9 of appendix A-4 of 40 CFR part 60. When emissions from any EAF or AOD vessel are combined with emissions from emission sources not subject to this subpart, you must demonstrate compliance with the melt shop opacity limit based on emissions from only the emission sources subject to this subpart.

(3) During any performance test, you must monitor and record the information specified in 40 CFR 60.274a(h) for all heats covered by the test.

(4) You must notify and receive approval from the Administrator for procedures that will be used to determine compliance for an EAF or AOD vessel when emissions are combined with those from facilities not subject to this subpart.

(5) To determine compliance with the PM emissions limit in paragraph (c) of this section for an EAF or AOD vessel in a lb/ton of steel format, compute the process-weighted mass emissions (E_p) for each test run using Equation 1 of this section:

$$E_p = \frac{C \times Q \times T}{P \times K} \qquad \text{(Eq 1)}$$

View or download PDF

Where:

E_p = Process-weighted mass emissions of PM, lb/ton;

C = Concentration of PM or total metal HAP, gr/dscf;

Q = Volumetric flow rate of stack gas, dscf/hr;

T = Total time during a test run that a sample is withdrawn from the stack during steel production cycle, hr;

P = Total amount of metal produced during the test run, tons; and

K = Conversion factor, 7,000 grains per pound.

(6) If you own or operate an existing affected source that is subject to the emissions limits in paragraph (b) or (c) of this section, you may certify initial compliance with the applicable emission limit for one or more emissions sources based on the results of a previous performance test for that emissions source in lieu of the requirement for an initial performance test provided that the test(s) were conducted within 5 years of the compliance date using the methods and procedures specified in paragraph (d)(1) or (2) of this section; the test(s) were for the affected

facility; and the test(s) were representative of current or anticipated operating processes and conditions. Should the permitting authority deem the prior test data unacceptable to demonstrate compliance with an applicable emissions limit, the owner or operator must conduct an initial performance test within 180 days of the compliance date or within 90 days of receipt of the notification of disapproval of the prior test, whichever is later.

(e) You must monitor the capture system and PM control device required by this subpart, maintain records, and submit reports according to the compliance assurance monitoring requirements in 40 CFR part 64. The exemption in 40 CFR 64.2(b)(1)(i) for emissions limitations or standards proposed after November 15, 1990 under section 111 or 112 of the CAA does not apply. In lieu of the deadlines for submittal in 40 CFR 64.5, you must submit the monitoring information required by 40 CFR 64.4 to the applicable permitting authority for approval by no later than the compliance date for your affected source for this subpart and operate according to the approved plan by no later than 180 days after the date of approval by the permitting authority.

OTHER INFORMATION AND REQUIREMENTS

§63.10690 What parts of the General Provisions apply to this subpart?

(a) You must comply with the requirements of the NESHAP General Provisions (40 CFR part 63, subpart A) as provided in Table 1 of this subpart.

(b) The notification of compliance status required by §63.9(h) must include each applicable certification of compliance, signed by a responsible official, in paragraphs (b)(1) through (6) of this section.

(1) For the pollution prevention plan requirements in §63.10685(a)(1): “This facility has submitted a pollution prevention plan for metallic scrap selection and inspection in accordance with §63.10685(a)(1)”;

(2) For the restrictions on metallic scrap in §63.10685(a)(2): “This facility complies with the requirements for restricted metallic scrap in accordance with §63.10685(a)(2)”;

(3) For the mercury requirements in §63.10685(b):

(i) “This facility has prepared a site-specific plan for mercury switches in accordance with §63.10685(b)(1)”;

(ii) “This facility participates in and purchases motor vehicle scrap only from scrap providers who participate in a program for removal of mercury switches that has been approved by the EPA Administrator in accordance with §63.10685(b)(2)” and has prepared a plan demonstrating how the facility participates in the EPA-approved program in accordance with §63.10685(b)(2)(iv);

(iii) “The only materials from motor vehicles in the scrap charged to an electric arc furnace at this facility are materials recovered for their specialty alloy content in accordance with §63.10685(b)(3) which are not reasonably expected to contain mercury switches”; or

(iv) “This facility complies with the requirements for scrap that does not contain motor vehicle scrap in accordance with §63.10685(b)(4).”

(4) This certification of compliance for the capture system requirements in §63.10686(a), signed by a responsible official: “This facility operates a capture system for each electric arc furnace and argon-oxygen decarburization vessel that conveys the collected emissions to a PM control device in accordance with §63.10686(a)”.

(5) If applicable, this certification of compliance for the performance test requirements in §63.10686(d)(6): “This facility certifies initial compliance with the applicable emissions limit in §63.10686(a) or (b) based on the results of a previous performance test in accordance with §63.10686(d)(6)”.

(6) This certification of compliance for the monitoring requirements in §63.10686(e), signed by a responsible official: “This facility has developed and submitted proposed monitoring information in accordance with 40 CFR part 64”.

§63.10691 Who implements and enforces this subpart?

(a) This subpart can be implemented and enforced by the EPA or a delegated authority such as a State, local, or tribal agency. If the EPA Administrator has delegated authority to a State, local, or tribal agency, then that Agency has the authority to implement and enforce this subpart. You should contact your EPA Regional Office to find out if this subpart is delegated to your State, local, or tribal agency.

(b) In delegating implementation and enforcement authority of this subpart to a State, local, or tribal agency under 40 CFR part 63, subpart E, the authorities contained in paragraph (c) of this section are retained by the Administrator and are not transferred to the State, local, or tribal agency.

(c) The authorities that will not be delegated to State, local, or tribal agencies are listed in paragraphs (c)(1) through (6) of this section.

(1) Approval of an alternative non-opacity emissions standard under 40 CFR 63.6(g).

(2) Approval of an alternative opacity emissions standard under §63.6(h)(9).

(3) Approval of a major change to test methods under §63.7(e)(2)(ii) and (f). A “major change to test method” is defined in 40 CFR 63.90.

(4) Approval of major change to monitoring under 40 CFR 63.8(f). A “major change to monitoring” is defined in 40 CFR 63.90.

(5) Approval of a major change to recordkeeping/reporting under 40 CFR 63.10(f). A "major change to recordkeeping/reporting" is defined in 40 CFR 63.90.

(6) Approval of a program for the removal of mercury switches under §63.10685(b)(2).

§63.10692 What definitions apply to this subpart?

Terms used in this subpart are defined in the Clean Air Act, in §63.2, and in this section as follows:

Argon-oxygen decarburization (AOD) vessel means any closed-bottom, refractory-lined converter vessel with submerged tuyeres through which gaseous mixtures containing argon and oxygen or nitrogen may be blown into molten steel for further refining.

Capture system means the equipment (including ducts, hoods, fans, dampers, etc.) used to capture or transport emissions generated by an electric arc furnace or argon-oxygen decarburization vessel to the air pollution control device.

Chlorinated plastics means solid polymeric materials that contain chlorine in the polymer chain, such as polyvinyl chloride (PVC) and PVC copolymers.

Control device means the air pollution control equipment used to remove particulate matter from the effluent gas stream generated by an electric arc furnace or argon-oxygen decarburization vessel.

Deviation means any instance where an affected source subject to this subpart, or an owner or operator of such a source:

(1) Fails to meet any requirement or obligation established by this subpart, including but not limited to any emissions limitation or work practice standard;

(2) Fails to meet any term or condition that is adopted to implement an applicable requirement in this subpart and that is included in the operating permit for any affected source required to obtain such a permit; or

(3) Fails to meet any emissions limitation in this subpart during startup, shutdown, or malfunction, regardless of whether or not such failure is permitted by this subpart.

Electric arc furnace (EAF) means a furnace that produces molten steel and heats the charge materials with electric arcs from carbon electrodes. An electric arc furnace consists of the furnace shell, roof, and the transformer.

Electric arc furnace (EAF) steelmaking facility means a steel plant that produces carbon, alloy, or specialty steels using an EAF. This definition excludes EAF steelmaking facilities at steel foundries and EAF facilities used to produce nonferrous metals.

Free organic liquids means material that fails the paint filter test by EPA Method 9095B, (revision 2, dated November 1994) (incorporated by reference—see §63.14) after accounting for water using a moisture determination test by ASTM Method D2216-05 (incorporated by reference—see §63.14). If, after conducting a moisture determination test, if any portion of the material passes through and drops from the filter within the 5-minute test period, the material contains *free organic liquids.*

Leaded steel means steel that must meet a minimum specification for lead content (typically 0.25 percent or more) and for which lead is a necessary alloy for that grade of steel.

Mercury switch means each mercury-containing capsule or switch assembly that is part of a convenience light switch mechanism installed in a vehicle.

Motor vehicle means an automotive vehicle not operated on rails and usually operated with rubber tires for use on highways.

Motor vehicle scrap means vehicle or automobile bodies, including automobile body hulks, that have been processed through a shredder. *Motor vehicle scrap* does not include automobile manufacturing bundles, or miscellaneous vehicle parts, such as wheels, bumpers or other components that do not contain mercury switches.

Nonferrous metals means any pure metal other than iron or any metal alloy for which an element other than iron is its major constituent by percent in weight.

Scrap provider means the person (including a broker) who contracts directly with a steel mill to provide scrap that contains motor vehicle scrap. Scrap processors such as shredder operators or vehicle dismantlers that do not sell scrap directly to a steel mill are not *scrap providers.*

Specialty steel means low carbon and high alloy steel other than stainless steel that is processed in an argon-oxygen decarburization vessel.

Stainless steel means low carbon steel that contains at least 10.5 percent chromium.

Table 1 to Subpart YYYYY of Part 63—Applicability of General Provisions to Subpart YYYYY

As required in §63.10691(a), you must comply with the requirements of the NESHAP General Provisions (40 CFR part 63, subpart A) shown in the following table.

Citation	**Subject**	**Applies to subpart YYYYY?**	**Explanation**
§63.1(a)(1), (a)(2), (a)(3), (a)(4), (a)(6), (a)(10)-(a)(12),	Applicability	Yes	

(b)(1), (b)(3), (c)(1), (c)(2), (c)(5), (e)			
§63.1(a)(5), (a)(7)-(a)(9), (b)(2), (c)(3), (c)(4), (d)	Reserved	No	
§63.2	Definitions	Yes	
§63.3	Units and Abbreviations	Yes	
§63.4	Prohibited Activities and Circumvention	Yes	
§63.5	Preconstruction Review and Notification Requirements	Yes	
§63.6(a), (b)(1)-(b)(5), (b)(7), (c)(1), (c)(2), (c)(5), (e)(1), (e)(3)(i), (e)(3)(iii)-(e)(3)(ix), (f), (g), (h)(1), (h)(2), (h)(5)-(h)(9), (i), (j)	Compliance with Standards and Maintenance Requirements	Yes	
§63.6(b)(6), (c)(3), (c)(4), (d), (e)(2), (e)(3)(ii), (h)(3), (h)(5)(iv)	Reserved	No	
§63.7	Applicability and Performance Test Dates	Yes	
§63.8(a)(1), (a)(2), (b), (c), (d), (e), (f)(1)-(5), (g)	Monitoring Requirements	Yes	Requirements apply if a COMS or CEMS is used.
§63.8(a)(3)	[Reserved]	No	
§63.8(a)(4)	Additional Monitoring Requirements for Control Devices in §63.11	No	
§63.8(c)(4)	Continuous Monitoring System Requirements	Yes	Requirements apply if a COMS or CEMS is used.
§63.8(f)(6)	RATA Alternative	Yes	Requirements apply if a CEMS is used.
§63.9(a), (b)(1), (b)(2), (b)(5), (c), (d), (f), (g), (h)(1)-(h)(3), (h)(5), (h)(6), (i), (j)	Notification Requirements	Yes	
§63.9(b)(3), (h)(4)	Reserved	No	
§63.9(b)(4)		No	

§63.10(a), (b)(1), (b)(2)(i)-(v), (b)(2)(xiv), (b)(3), (c)(1), (c)(5)-(c)(8), (c)(10)-(c)(15), (d), (e)(1)-(e)(4), (f)	Recordkeeping and Reporting Requirements	Yes	Additional records for CMS in §63.10(c) (1)-(6), (9)-(15), and reports in §63.10(d)(1)-(2) apply if a COMS or CEMS is used.
§63.10(b)(2)(xiii)	CMS Records for RATA Alternative	Yes	Requirements apply if a CEMS is used.
§63.10(c)(2)-(c)(4), (c)(9)	Reserved	No	
§63.11	Control Device Requirements	No	
§63.12	State Authority and Delegations	Yes	
§§63.13-63.16	Addresses, Incorporations by Reference, Availability of Information, Performance Track Provisions	Yes	

40 CFR 63 Subpart ZZZZ

National Emissions Standards for Hazardous Air Pollutants for Stationary Reciprocating Internal Combustion Engines

§63.6580 What is the purpose of subpart ZZZZ?

Subpart ZZZZ establishes national emission limitations and operating limitations for hazardous air pollutants (HAP) emitted from stationary reciprocating internal combustion engines (RICE) located at major and area sources of HAP emissions. This subpart also establishes requirements to demonstrate initial and continuous compliance with the emission limitations and operating limitations.

[73 FR 3603, Jan. 18, 2008]

§63.6585 Am I subject to this subpart?

You are subject to this subpart if you own or operate a stationary RICE at a major or area source of HAP emissions, except if the stationary RICE is being tested at a stationary RICE test cell/stand.

(a) A stationary RICE is any internal combustion engine which uses reciprocating motion to convert heat energy into mechanical work and which is not mobile. Stationary RICE differ from mobile RICE in that a stationary RICE is not a non-road engine as defined at 40 CFR 1068.30, and is not used to propel a motor vehicle or a vehicle used solely for competition.

P. Kay Metal does not operate a reciprocating internal combustion engine (RICE). This does not apply.

(b) A major source of HAP emissions is a plant site that emits or has the potential to emit any single HAP at a rate of 10 tons (9.07 megagrams) or more per year or any combination of HAP at a rate of 25 tons (22.68 megagrams) or more per year, except that for oil and gas production facilities, a major source of HAP emissions is determined for each surface site.

P. Kay Metal is not a major source of HAP emissions. This does not apply.

(c) An area source of HAP emissions is a source that is not a major source.

P. Kay Metal does not have an area source of HAP emissions. This does not apply.

(d) If you are an owner or operator of an area source subject to this subpart, your status as an entity subject to a standard or other requirements under this subpart does not subject you to the obligation to obtain a permit under 40 CFR part 70 or 71, provided you are not required to obtain a permit under 40 CFR 70.3(a) or 40 CFR 71.3(a) for a reason other than your status as an

area source under this subpart. Notwithstanding the previous sentence, you must continue to comply with the provisions of this subpart as applicable.

(e) If you are an owner or operator of a stationary RICE used for national security purposes, you may be eligible to request an exemption from the requirements of this subpart as described in 40 CFR part 1068, subpart C.

(f) The emergency stationary RICE listed in paragraphs (f)(1) through (3) of this section are not subject to this subpart. The stationary RICE must meet the definition of an emergency stationary RICE in §63.6675, which includes operating according to the provisions specified in §63.6640(f).

(1) Existing residential emergency stationary RICE located at an area source of HAP emissions that do not operate or are not contractually obligated to be available for more than 15 hours per calendar year for the purposes specified in §63.6640(f)(2)(ii) and (iii) and that do not operate for the purpose specified in §63.6640(f)(4)(ii).

(2) Existing commercial emergency stationary RICE located at an area source of HAP emissions that do not operate or are not contractually obligated to be available for more than 15 hours per calendar year for the purposes specified in §63.6640(f)(2)(ii) and (iii) and that do not operate for the purpose specified in §63.6640(f)(4)(ii).

(3) Existing institutional emergency stationary RICE located at an area source of HAP emissions that do not operate or are not contractually obligated to be available for more than 15 hours per calendar year for the purposes specified in §63.6640(f)(2)(ii) and (iii) and that do not operate for the purpose specified in §63.6640(f)(4)(ii).

[69 FR 33506, June 15, 2004, as amended at 73 FR 3603, Jan. 18, 2008; 78 FR 6700, Jan. 30, 2013]

40 CFR 63 Subpart ZZZZ does not apply to P. Kay Metal.

§63.6590 What parts of my plant does this subpart cover?

This subpart applies to each affected source.

(a) *Affected source.* An affected source is any existing, new, or reconstructed stationary RICE located at a major or area source of HAP emissions, excluding stationary RICE being tested at a stationary RICE test cell/stand.

(1) *Existing stationary RICE.*

(i) For stationary RICE with a site rating of more than 500 brake horsepower (HP) located at a major source of HAP emissions, a stationary RICE is existing if you commenced construction or reconstruction of the stationary RICE before December 19, 2002.

(ii) For stationary RICE with a site rating of less than or equal to 500 brake HP located at a major source of HAP emissions, a stationary RICE is existing if you commenced construction or reconstruction of the stationary RICE before June 12, 2006.

(iii) For stationary RICE located at an area source of HAP emissions, a stationary RICE is existing if you commenced construction or reconstruction of the stationary RICE before June 12, 2006.

(iv) A change in ownership of an existing stationary RICE does not make that stationary RICE a new or reconstructed stationary RICE.

(2) *New stationary RICE.* (i) A stationary RICE with a site rating of more than 500 brake HP located at a major source of HAP emissions is new if you commenced construction of the stationary RICE on or after December 19, 2002.

(ii) A stationary RICE with a site rating of equal to or less than 500 brake HP located at a major source of HAP emissions is new if you commenced construction of the stationary RICE on or after June 12, 2006.

(iii) A stationary RICE located at an area source of HAP emissions is new if you commenced construction of the stationary RICE on or after June 12, 2006.

(3) *Reconstructed stationary RICE.* (i) A stationary RICE with a site rating of more than 500 brake HP located at a major source of HAP emissions is reconstructed if you meet the definition of reconstruction in §63.2 and reconstruction is commenced on or after December 19, 2002.

(ii) A stationary RICE with a site rating of equal to or less than 500 brake HP located at a major source of HAP emissions is reconstructed if you meet the definition of reconstruction in §63.2 and reconstruction is commenced on or after June 12, 2006.

(iii) A stationary RICE located at an area source of HAP emissions is reconstructed if you meet the definition of reconstruction in §63.2 and reconstruction is commenced on or after June 12, 2006.

(b) *Stationary RICE subject to limited requirements.* (1) An affected source which meets either of the criteria in paragraphs (b)(1)(i) through (ii) of this section does not have to meet the requirements of this subpart and of subpart A of this part except for the initial notification requirements of §63.6645(f).

(i) The stationary RICE is a new or reconstructed emergency stationary RICE with a site rating of more than 500 brake HP located at a major source of HAP emissions that does not operate or is not contractually obligated to be available for more than 15 hours per calendar year for the purposes specified in §63.6640(f)(2)(ii) and (iii).

(ii) The stationary RICE is a new or reconstructed limited use stationary RICE with a site rating of more than 500 brake HP located at a major source of HAP emissions.

(2) A new or reconstructed stationary RICE with a site rating of more than 500 brake HP located at a major source of HAP emissions which combusts landfill or digester gas equivalent to 10 percent or more of the gross heat input on an annual basis must meet the initial notification requirements of §63.6645(f) and the requirements of §§63.6625(c), 63.6650(g), and 63.6655(c). These stationary RICE do not have to meet the emission limitations and operating limitations of this subpart.

(3) The following stationary RICE do not have to meet the requirements of this subpart and of subpart A of this part, including initial notification requirements:

(i) Existing spark ignition 2 stroke lean burn (2SLB) stationary RICE with a site rating of more than 500 brake HP located at a major source of HAP emissions;

(ii) Existing spark ignition 4 stroke lean burn (4SLB) stationary RICE with a site rating of more than 500 brake HP located at a major source of HAP emissions;

(iii) Existing emergency stationary RICE with a site rating of more than 500 brake HP located at a major source of HAP emissions that does not operate or is not contractually obligated to be available for more than 15 hours per calendar year for the purposes specified in §63.6640(f)(2)(ii) and (iii).

(iv) Existing limited use stationary RICE with a site rating of more than 500 brake HP located at a major source of HAP emissions;

(v) Existing stationary RICE with a site rating of more than 500 brake HP located at a major source of HAP emissions that combusts landfill gas or digester gas equivalent to 10 percent or more of the gross heat input on an annual basis;

(c) *Stationary RICE subject to Regulations under 40 CFR Part 60.* An affected source that meets any of the criteria in paragraphs (c)(1) through (7) of this section must meet the requirements of this part by meeting the requirements of 40 CFR part 60 subpart IIII, for compression ignition engines or 40 CFR part 60 subpart JJJJ, for spark ignition engines. No further requirements apply for such engines under this part.

(1) A new or reconstructed stationary RICE located at an area source;

(2) A new or reconstructed 2SLB stationary RICE with a site rating of less than or equal to 500 brake HP located at a major source of HAP emissions;

(3) A new or reconstructed 4SLB stationary RICE with a site rating of less than 250 brake HP located at a major source of HAP emissions;

(4) A new or reconstructed spark ignition 4 stroke rich burn (4SRB) stationary RICE with a site rating of less than or equal to 500 brake HP located at a major source of HAP emissions;

(5) A new or reconstructed stationary RICE with a site rating of less than or equal to 500 brake HP located at a major source of HAP emissions which combusts landfill or digester gas equivalent to 10 percent or more of the gross heat input on an annual basis;

(6) A new or reconstructed emergency or limited use stationary RICE with a site rating of less than or equal to 500 brake HP located at a major source of HAP emissions;

(7) A new or reconstructed compression ignition (CI) stationary RICE with a site rating of less than or equal to 500 brake HP located at a major source of HAP emissions.

[69 FR 33506, June 15, 2004, as amended at 73 FR 3604, Jan. 18, 2008; 75 FR 9674, Mar. 3, 2010; 75 FR 37733, June 30, 2010; 75 FR 51588, Aug. 20, 2010; 78 FR 6700, Jan. 30, 2013]

§63.6595 When do I have to comply with this subpart?

(a) *Affected sources.* (1) If you have an existing stationary RICE, excluding existing non-emergency CI stationary RICE, with a site rating of more than 500 brake HP located at a major source of HAP emissions, you must comply with the applicable emission limitations, operating limitations and other requirements no later than June 15, 2007. If you have an existing non-emergency CI stationary RICE with a site rating of more than 500 brake HP located at a major source of HAP emissions, an existing stationary CI RICE with a site rating of less than or equal to 500 brake HP located at a major source of HAP emissions, or an existing stationary CI RICE located at an area source of HAP emissions, you must comply with the applicable emission limitations, operating limitations, and other requirements no later than May 3, 2013. If you have an existing stationary SI RICE with a site rating of less than or equal to 500 brake HP located at a major source of HAP emissions, or an existing stationary SI RICE located at an area source of HAP emissions, you must comply with the applicable emission limitations, operating limitations, and other requirements no later than October 19, 2013.

(2) If you start up your new or reconstructed stationary RICE with a site rating of more than 500 brake HP located at a major source of HAP emissions before August 16, 2004, you must comply with the applicable emission limitations and operating limitations in this subpart no later than August 16, 2004.

(3) If you start up your new or reconstructed stationary RICE with a site rating of more than 500 brake HP located at a major source of HAP emissions after August 16, 2004, you must comply with the applicable emission limitations and operating limitations in this subpart upon startup of your affected source.

(4) If you start up your new or reconstructed stationary RICE with a site rating of less than or equal to 500 brake HP located at a major source of HAP emissions before January 18, 2008, you must comply with the applicable emission limitations and operating limitations in this subpart no later than January 18, 2008.

(5) If you start up your new or reconstructed stationary RICE with a site rating of less than or equal to 500 brake HP located at a major source of HAP emissions after January 18, 2008, you must comply with the applicable emission limitations and operating limitations in this subpart upon startup of your affected source.

(6) If you start up your new or reconstructed stationary RICE located at an area source of HAP emissions before January 18, 2008, you must comply with the applicable emission limitations and operating limitations in this subpart no later than January 18, 2008.

(7) If you start up your new or reconstructed stationary RICE located at an area source of HAP emissions after January 18, 2008, you must comply with the applicable emission limitations and operating limitations in this subpart upon startup of your affected source.

(b) *Area sources that become major sources.* If you have an area source that increases its emissions or its potential to emit such that it becomes a major source of HAP, the compliance dates in paragraphs (b)(1) and (2) of this section apply to you.

(1) Any stationary RICE for which construction or reconstruction is commenced after the date when your area source becomes a major source of HAP must be in compliance with this subpart upon startup of your affected source.

(2) Any stationary RICE for which construction or reconstruction is commenced before your area source becomes a major source of HAP must be in compliance with the provisions of this subpart that are applicable to RICE located at major sources within 3 years after your area source becomes a major source of HAP.

(c) If you own or operate an affected source, you must meet the applicable notification requirements in §63.6645 and in 40 CFR part 63, subpart A.

[69 FR 33506, June 15, 2004, as amended at 73 FR 3604, Jan. 18, 2008; 75 FR 9675, Mar. 3, 2010; 75 FR 51589, Aug. 20, 2010; 78 FR 6701, Jan. 30, 2013]

EMISSION AND OPERATING LIMITATIONS

§63.6600 What emission limitations and operating limitations must I meet if I own or operate a stationary RICE with a site rating of more than 500 brake HP located at a major source of HAP emissions?

Compliance with the numerical emission limitations established in this subpart is based on the results of testing the average of three 1-hour runs using the testing requirements and procedures in §63.6620 and Table 4 to this subpart.

(a) If you own or operate an existing, new, or reconstructed spark ignition 4SRB stationary RICE with a site rating of more than 500 brake HP located at a major source of HAP emissions, you must comply with the emission limitations in Table 1a to this subpart and the operating limitations in Table 1b to this subpart which apply to you.

(b) If you own or operate a new or reconstructed 2SLB stationary RICE with a site rating of more than 500 brake HP located at major source of HAP emissions, a new or reconstructed 4SLB stationary RICE with a site rating of more than 500 brake HP located at major source of HAP emissions, or a new or reconstructed CI stationary RICE with a site rating of more than 500 brake HP located at a major source of HAP emissions, you must comply with the emission limitations in Table 2a to this subpart and the operating limitations in Table 2b to this subpart which apply to you.

(c) If you own or operate any of the following stationary RICE with a site rating of more than 500 brake HP located at a major source of HAP emissions, you do not need to comply with the emission limitations in Tables 1a, 2a, 2c, and 2d to this subpart or operating limitations in Tables 1b and 2b to this subpart: an existing 2SLB stationary RICE; an existing 4SLB stationary RICE; a stationary RICE that combusts landfill gas or digester gas equivalent to 10 percent or more of the gross heat input on an annual basis; an emergency stationary RICE; or a limited use stationary RICE.

(d) If you own or operate an existing non-emergency stationary CI RICE with a site rating of more than 500 brake HP located at a major source of HAP emissions, you must comply with the emission limitations in Table 2c to this subpart and the operating limitations in Table 2b to this subpart which apply to you.

[73 FR 3605, Jan. 18, 2008, as amended at 75 FR 9675, Mar. 3, 2010]

§63.6601 What emission limitations must I meet if I own or operate a new or reconstructed 4SLB stationary RICE with a site rating of greater than or equal to 250 brake HP and less than or equal to 500 brake HP located at a major source of HAP emissions?

Compliance with the numerical emission limitations established in this subpart is based on the results of testing the average of three 1-hour runs using the testing requirements and procedures in §63.6620 and Table 4 to this subpart. If you own or operate a new or reconstructed 4SLB stationary RICE with a site rating of greater than or equal to 250 and less than or equal to 500 brake HP located at major source of HAP emissions manufactured on or after January 1, 2008, you must comply with the emission limitations in Table 2a to this subpart and the operating limitations in Table 2b to this subpart which apply to you.

[73 FR 3605, Jan. 18, 2008, as amended at 75 FR 9675, Mar. 3, 2010; 75 FR 51589, Aug. 20, 2010]

§63.6602 What emission limitations and other requirements must I meet if I own or operate an existing stationary RICE with a site rating of equal to or less than 500 brake HP located at a major source of HAP emissions?

If you own or operate an existing stationary RICE with a site rating of equal to or less than 500 brake HP located at a major source of HAP emissions, you must comply with the emission limitations and other requirements in Table 2c to this subpart which apply to you. Compliance with the numerical emission limitations established in this subpart is based on the results of

testing the average of three 1-hour runs using the testing requirements and procedures in §63.6620 and Table 4 to this subpart.

[78 FR 6701, Jan. 30, 2013]

§63.6603 What emission limitations, operating limitations, and other requirements must I meet if I own or operate an existing stationary RICE located at an area source of HAP emissions?

Compliance with the numerical emission limitations established in this subpart is based on the results of testing the average of three 1-hour runs using the testing requirements and procedures in §63.6620 and Table 4 to this subpart.

(a) If you own or operate an existing stationary RICE located at an area source of HAP emissions, you must comply with the requirements in Table 2d to this subpart and the operating limitations in Table 2b to this subpart that apply to you.

(b) If you own or operate an existing stationary non-emergency CI RICE with a site rating of more than 300 HP located at an area source of HAP that meets either paragraph (b)(1) or (2) of this section, you do not have to meet the numerical CO emission limitations specified in Table 2d of this subpart. Existing stationary non-emergency CI RICE with a site rating of more than 300 HP located at an area source of HAP that meet either paragraph (b)(1) or (2) of this section must meet the management practices that are shown for stationary non-emergency CI RICE with a site rating of less than or equal to 300 HP in Table 2d of this subpart.

(1) The area source is located in an area of Alaska that is not accessible by the Federal Aid Highway System (FAHS).

(2) The stationary RICE is located at an area source that meets paragraphs (b)(2)(i), (ii), and (iii) of this section.

(i) The only connection to the FAHS is through the Alaska Marine Highway System (AMHS), or the stationary RICE operation is within an isolated grid in Alaska that is not connected to the statewide electrical grid referred to as the Alaska Railbelt Grid.

(ii) At least 10 percent of the power generated by the stationary RICE on an annual basis is used for residential purposes.

(iii) The generating capacity of the area source is less than 12 megawatts, or the stationary RICE is used exclusively for backup power for renewable energy.

(c) If you own or operate an existing stationary non-emergency CI RICE with a site rating of more than 300 HP located on an offshore vessel that is an area source of HAP and is a nonroad vehicle that is an Outer Continental Shelf (OCS) source as defined in 40 CFR 55.2, you do not have to meet the numerical CO emission limitations specified in Table 2d of this subpart. You must meet all of the following management practices:

(1) Change oil every 1,000 hours of operation or annually, whichever comes first. Sources have the option to utilize an oil analysis program as described in §63.6625(i) in order to extend the specified oil change requirement.

(2) Inspect and clean air filters every 750 hours of operation or annually, whichever comes first, and replace as necessary.

(3) Inspect fuel filters and belts, if installed, every 750 hours of operation or annually, whichever comes first, and replace as necessary.

(4) Inspect all flexible hoses every 1,000 hours of operation or annually, whichever comes first, and replace as necessary.

(d) If you own or operate an existing non-emergency CI RICE with a site rating of more than 300 HP located at an area source of HAP emissions that is certified to the Tier 1 or Tier 2 emission standards in Table 1 of 40 CFR 89.112 and that is subject to an enforceable state or local standard that requires the engine to be replaced no later than June 1, 2018, you may until January 1, 2015, or 12 years after the installation date of the engine (whichever is later), but not later than June 1, 2018, choose to comply with the management practices that are shown for stationary non-emergency CI RICE with a site rating of less than or equal to 300 HP in Table 2d of this subpart instead of the applicable emission limitations in Table 2d, operating limitations in Table 2b, and crankcase ventilation system requirements in §63.6625(g). You must comply with the emission limitations in Table 2d and operating limitations in Table 2b that apply for non-emergency CI RICE with a site rating of more than 300 HP located at an area source of HAP emissions by January 1, 2015, or 12 years after the installation date of the engine (whichever is later), but not later than June 1, 2018. You must also comply with the crankcase ventilation system requirements in §63.6625(g) by January 1, 2015, or 12 years after the installation date of the engine (whichever is later), but not later than June 1, 2018.

(e) If you own or operate an existing non-emergency CI RICE with a site rating of more than 300 HP located at an area source of HAP emissions that is certified to the Tier 3 (Tier 2 for engines above 560 kilowatt (kW)) emission standards in Table 1 of 40 CFR 89.112, you may comply with the requirements under this part by meeting the requirements for Tier 3 engines (Tier 2 for engines above 560 kW) in 40 CFR part 60 subpart IIII instead of the emission limitations and other requirements that would otherwise apply under this part for existing non-emergency CI RICE with a site rating of more than 300 HP located at an area source of HAP emissions.

(f) An existing non-emergency SI 4SLB and 4SRB stationary RICE with a site rating of more than 500 HP located at area sources of HAP must meet the definition of remote stationary RICE in §63.6675 on the initial compliance date for the engine, October 19, 2013, in order to be considered a remote stationary RICE under this subpart. Owners and operators of existing non-emergency SI 4SLB and 4SRB stationary RICE with a site rating of more than 500 HP located at area sources of HAP that meet the definition of remote stationary RICE in §63.6675 of this subpart as of October 19, 2013 must evaluate the status of their stationary RICE every 12 months. Owners and operators must keep records of the initial and annual evaluation of the status

of the engine. If the evaluation indicates that the stationary RICE no longer meets the definition of remote stationary RICE in §63.6675 of this subpart, the owner or operator must comply with all of the requirements for existing non-emergency SI 4SLB and 4SRB stationary RICE with a site rating of more than 500 HP located at area sources of HAP that are not remote stationary RICE within 1 year of the evaluation.

[75 FR 9675, Mar. 3, 2010, as amended at 75 FR 51589, Aug. 20, 2010; 76 FR 12866, Mar. 9, 2011; 78 FR 6701, Jan. 30, 2013]

§63.6604 What fuel requirements must I meet if I own or operate a stationary CI RICE?

(a) If you own or operate an existing non-emergency, non-black start CI stationary RICE with a site rating of more than 300 brake HP with a displacement of less than 30 liters per cylinder that uses diesel fuel, you must use diesel fuel that meets the requirements in 40 CFR 80.510(b) for nonroad diesel fuel.

(b) Beginning January 1, 2015, if you own or operate an existing emergency CI stationary RICE with a site rating of more than 100 brake HP and a displacement of less than 30 liters per cylinder that uses diesel fuel and operates or is contractually obligated to be available for more than 15 hours per calendar year for the purposes specified in §63.6640(f)(2)(ii) and (iii) or that operates for the purpose specified in §63.6640(f)(4)(ii), you must use diesel fuel that meets the requirements in 40 CFR 80.510(b) for nonroad diesel fuel, except that any existing diesel fuel purchased (or otherwise obtained) prior to January 1, 2015, may be used until depleted.

(c) Beginning January 1, 2015, if you own or operate a new emergency CI stationary RICE with a site rating of more than 500 brake HP and a displacement of less than 30 liters per cylinder located at a major source of HAP that uses diesel fuel and operates or is contractually obligated to be available for more than 15 hours per calendar year for the purposes specified in §63.6640(f)(2)(ii) and (iii), you must use diesel fuel that meets the requirements in 40 CFR 80.510(b) for nonroad diesel fuel, except that any existing diesel fuel purchased (or otherwise obtained) prior to January 1, 2015, may be used until depleted.

(d) Existing CI stationary RICE located in Guam, American Samoa, the Commonwealth of the Northern Mariana Islands, at area sources in areas of Alaska that meet either §63.6603(b)(1) or §63.6603(b)(2), or are on offshore vessels that meet §63.6603(c) are exempt from the requirements of this section.

[78 FR 6702, Jan. 30, 2013]

GENERAL COMPLIANCE REQUIREMENTS

§63.6605 What are my general requirements for complying with this subpart?

(a) You must be in compliance with the emission limitations, operating limitations, and other requirements in this subpart that apply to you at all times.

(b) At all times you must operate and maintain any affected source, including associated air pollution control equipment and monitoring equipment, in a manner consistent with safety and good air pollution control practices for minimizing emissions. The general duty to minimize emissions does not require you to make any further efforts to reduce emissions if levels required by this standard have been achieved. Determination of whether such operation and maintenance procedures are being used will be based on information available to the Administrator which may include, but is not limited to, monitoring results, review of operation and maintenance procedures, review of operation and maintenance records, and inspection of the source.

[75 FR 9675, Mar. 3, 2010, as amended at 78 FR 6702, Jan. 30, 2013]

TESTING AND INITIAL COMPLIANCE REQUIREMENTS

§63.6610 By what date must I conduct the initial performance tests or other initial compliance demonstrations if I own or operate a stationary RICE with a site rating of more than 500 brake HP located at a major source of HAP emissions?

If you own or operate a stationary RICE with a site rating of more than 500 brake HP located at a major source of HAP emissions you are subject to the requirements of this section.

(a) You must conduct the initial performance test or other initial compliance demonstrations in Table 4 to this subpart that apply to you within 180 days after the compliance date that is specified for your stationary RICE in §63.6595 and according to the provisions in §63.7(a)(2).

(b) If you commenced construction or reconstruction between December 19, 2002 and June 15, 2004 and own or operate stationary RICE with a site rating of more than 500 brake HP located at a major source of HAP emissions, you must demonstrate initial compliance with either the proposed emission limitations or the promulgated emission limitations no later than February 10, 2005 or no later than 180 days after startup of the source, whichever is later, according to §63.7(a)(2)(ix).

(c) If you commenced construction or reconstruction between December 19, 2002 and June 15, 2004 and own or operate stationary RICE with a site rating of more than 500 brake HP located at a major source of HAP emissions, and you chose to comply with the proposed emission limitations when demonstrating initial compliance, you must conduct a second performance test to demonstrate compliance with the promulgated emission limitations by December 13, 2007 or after startup of the source, whichever is later, according to §63.7(a)(2)(ix).

(d) An owner or operator is not required to conduct an initial performance test on units for which a performance test has been previously conducted, but the test must meet all of the conditions described in paragraphs (d)(1) through (5) of this section.

(1) The test must have been conducted using the same methods specified in this subpart, and these methods must have been followed correctly.

(2) The test must not be older than 2 years.

(3) The test must be reviewed and accepted by the Administrator.

(4) Either no process or equipment changes must have been made since the test was performed, or the owner or operator must be able to demonstrate that the results of the performance test, with or without adjustments, reliably demonstrate compliance despite process or equipment changes.

(5) The test must be conducted at any load condition within plus or minus 10 percent of 100 percent load.

[69 FR 33506, June 15, 2004, as amended at 73 FR 3605, Jan. 18, 2008]

§63.6611 By what date must I conduct the initial performance tests or other initial compliance demonstrations if I own or operate a new or reconstructed 4SLB SI stationary RICE with a site rating of greater than or equal to 250 and less than or equal to 500 brake HP located at a major source of HAP emissions?

If you own or operate a new or reconstructed 4SLB stationary RICE with a site rating of greater than or equal to 250 and less than or equal to 500 brake HP located at a major source of HAP emissions, you must conduct an initial performance test within 240 days after the compliance date that is specified for your stationary RICE in §63.6595 and according to the provisions specified in Table 4 to this subpart, as appropriate.

[73 FR 3605, Jan. 18, 2008, as amended at 75 FR 51589, Aug. 20, 2010]

§63.6612 By what date must I conduct the initial performance tests or other initial compliance demonstrations if I own or operate an existing stationary RICE with a site rating of less than or equal to 500 brake HP located at a major source of HAP emissions or an existing stationary RICE located at an area source of HAP emissions?

If you own or operate an existing stationary RICE with a site rating of less than or equal to 500 brake HP located at a major source of HAP emissions or an existing stationary RICE located at an area source of HAP emissions you are subject to the requirements of this section.

(a) You must conduct any initial performance test or other initial compliance demonstration according to Tables 4 and 5 to this subpart that apply to you within 180 days after the compliance date that is specified for your stationary RICE in §63.6595 and according to the provisions in §63.7(a)(2).

(b) An owner or operator is not required to conduct an initial performance test on a unit for which a performance test has been previously conducted, but the test must meet all of the conditions described in paragraphs (b)(1) through (4) of this section.

(1) The test must have been conducted using the same methods specified in this subpart, and these methods must have been followed correctly.

(2) The test must not be older than 2 years.

(3) The test must be reviewed and accepted by the Administrator.

(4) Either no process or equipment changes must have been made since the test was performed, or the owner or operator must be able to demonstrate that the results of the performance test, with or without adjustments, reliably demonstrate compliance despite process or equipment changes.

[75 FR 9676, Mar. 3, 2010, as amended at 75 FR 51589, Aug. 20, 2010]

§63.6615 When must I conduct subsequent performance tests?

If you must comply with the emission limitations and operating limitations, you must conduct subsequent performance tests as specified in Table 3 of this subpart.

§63.6620 What performance tests and other procedures must I use?

(a) You must conduct each performance test in Tables 3 and 4 of this subpart that applies to you.

(b) Each performance test must be conducted according to the requirements that this subpart specifies in Table 4 to this subpart. If you own or operate a non-operational stationary RICE that is subject to performance testing, you do not need to start up the engine solely to conduct the performance test. Owners and operators of a non-operational engine can conduct the performance test when the engine is started up again. The test must be conducted at any load condition within plus or minus 10 percent of 100 percent load for the stationary RICE listed in paragraphs (b)(1) through (4) of this section.

(1) Non-emergency 4SRB stationary RICE with a site rating of greater than 500 brake HP located at a major source of HAP emissions.

(2) New non-emergency 4SLB stationary RICE with a site rating of greater than or equal to 250 brake HP located at a major source of HAP emissions.

(3) New non-emergency 2SLB stationary RICE with a site rating of greater than 500 brake HP located at a major source of HAP emissions.

(4) New non-emergency CI stationary RICE with a site rating of greater than 500 brake HP located at a major source of HAP emissions.

(c) [Reserved]

(d) You must conduct three separate test runs for each performance test required in this section, as specified in §63.7(e)(3). Each test run must last at least 1 hour, unless otherwise specified in this subpart.

(e)(1) You must use Equation 1 of this section to determine compliance with the percent reduction requirement:

$$\frac{C_i - C_o}{C_i} \times 100 = R \quad (Eq.\ 1)$$

View or download PDF

Where:

C_i = concentration of carbon monoxide (CO), total hydrocarbons (THC), or formaldehyde at the control device inlet,

C_o = concentration of CO, THC, or formaldehyde at the control device outlet, and

R = percent reduction of CO, THC, or formaldehyde emissions.

(2) You must normalize the CO, THC, or formaldehyde concentrations at the inlet and outlet of the control device to a dry basis and to 15 percent oxygen, or an equivalent percent carbon dioxide (CO_2). If pollutant concentrations are to be corrected to 15 percent oxygen and CO_2 concentration is measured in lieu of oxygen concentration measurement, a CO_2 correction factor is needed. Calculate the CO_2 correction factor as described in paragraphs (e)(2)(i) through (iii) of this section.

(i) Calculate the fuel-specific F_o value for the fuel burned during the test using values obtained from Method 19, Section 5.2, and the following equation:

$$F_o = \frac{0.209\ F_d}{F_c} \quad (Eq.\ 2)$$

View or download PDF

Where:

F_o = Fuel factor based on the ratio of oxygen volume to the ultimate CO_2 volume produced by the fuel at zero percent excess air.

0.209 = Fraction of air that is oxygen, percent/100.

F_d = Ratio of the volume of dry effluent gas to the gross calorific value of the fuel from Method 19, dsm^3/J ($dscf/10^6$ Btu).

F_c = Ratio of the volume of CO_2 produced to the gross calorific value of the fuel from Method 19, dsm^3/J ($dscf/10^6$ Btu)

(ii) Calculate the CO_2 correction factor for correcting measurement data to 15 percent O_2, as follows:

$$X_{CO2} = \frac{5.9}{F_o} \quad (Eq.\ 3)$$

View or download PDF

Where:

X_{CO2} = CO_2 correction factor, percent.

5.9 = 20.9 percent O_2—15 percent O_2, the defined O_2 correction value, percent.

(iii) Calculate the CO, THC, and formaldehyde gas concentrations adjusted to 15 percent O_2 using CO_2 as follows:

$$C_{adj} = C_d \frac{X_{CO2}}{\%CO_2} \quad (Eq. 4)$$

View or download PDF

Where:

C_{adj} = Calculated concentration of CO, THC, or formaldehyde adjusted to 15 percent O_2.

C_d = Measured concentration of CO, THC, or formaldehyde, uncorrected.

X_{CO2} = CO_2 correction factor, percent.

$\%CO_2$ = Measured CO_2 concentration measured, dry basis, percent.

(f) If you comply with the emission limitation to reduce CO and you are not using an oxidation catalyst, if you comply with the emission limitation to reduce formaldehyde and you are not using NSCR, or if you comply with the emission limitation to limit the concentration of formaldehyde in the stationary RICE exhaust and you are not using an oxidation catalyst or NSCR, you must petition the Administrator for operating limitations to be established during the initial performance test and continuously monitored thereafter; or for approval of no operating limitations. You must not conduct the initial performance test until after the petition has been approved by the Administrator.

(g) If you petition the Administrator for approval of operating limitations, your petition must include the information described in paragraphs (g)(1) through (5) of this section.

(1) Identification of the specific parameters you propose to use as operating limitations;

(2) A discussion of the relationship between these parameters and HAP emissions, identifying how HAP emissions change with changes in these parameters, and how limitations on these parameters will serve to limit HAP emissions;

(3) A discussion of how you will establish the upper and/or lower values for these parameters which will establish the limits on these parameters in the operating limitations;

(4) A discussion identifying the methods you will use to measure and the instruments you will use to monitor these parameters, as well as the relative accuracy and precision of these methods and instruments; and

(5) A discussion identifying the frequency and methods for recalibrating the instruments you will use for monitoring these parameters.

(h) If you petition the Administrator for approval of no operating limitations, your petition must include the information described in paragraphs (h)(1) through (7) of this section.

(1) Identification of the parameters associated with operation of the stationary RICE and any emission control device which could change intentionally (*e.g.*, operator adjustment, automatic controller adjustment, etc.) or unintentionally (*e.g.*, wear and tear, error, etc.) on a routine basis or over time;

(2) A discussion of the relationship, if any, between changes in the parameters and changes in HAP emissions;

(3) For the parameters which could change in such a way as to increase HAP emissions, a discussion of whether establishing limitations on the parameters would serve to limit HAP emissions;

(4) For the parameters which could change in such a way as to increase HAP emissions, a discussion of how you could establish upper and/or lower values for the parameters which would establish limits on the parameters in operating limitations;

(5) For the parameters, a discussion identifying the methods you could use to measure them and the instruments you could use to monitor them, as well as the relative accuracy and precision of the methods and instruments;

(6) For the parameters, a discussion identifying the frequency and methods for recalibrating the instruments you could use to monitor them; and

(7) A discussion of why, from your point of view, it is infeasible or unreasonable to adopt the parameters as operating limitations.

(i) The engine percent load during a performance test must be determined by documenting the calculations, assumptions, and measurement devices used to measure or estimate the percent load in a specific application. A written report of the average percent load determination must be included in the notification of compliance status. The following information must be included in the written report: the engine model number, the engine manufacturer, the year of purchase, the manufacturer's site-rated brake horsepower, the ambient temperature, pressure, and humidity during the performance test, and all assumptions that were made to estimate or calculate percent load during the performance test must be clearly explained. If measurement devices such as flow meters, kilowatt meters, beta analyzers, stain gauges, etc. are used, the model number of the measurement device, and an estimate of its accurate in percentage of true value must be provided.

[69 FR 33506, June 15, 2004, as amended at 75 FR 9676, Mar. 3, 2010; 78 FR 6702, Jan. 30, 2013]

§63.6625 What are my monitoring, installation, collection, operation, and maintenance requirements?

(a) If you elect to install a CEMS as specified in Table 5 of this subpart, you must install, operate, and maintain a CEMS to monitor CO and either O_2 or CO_2 according to the requirements in paragraphs (a)(1) through (4) of this section. If you are meeting a requirement to reduce CO emissions, the CEMS must be installed at both the inlet and outlet of the control device. If you are meeting a requirement to limit the concentration of CO, the CEMS must be installed at the outlet of the control device.

(1) Each CEMS must be installed, operated, and maintained according to the applicable performance specifications of 40 CFR part 60, appendix B.

(2) You must conduct an initial performance evaluation and an annual relative accuracy test audit (RATA) of each CEMS according to the requirements in §63.8 and according to the applicable performance specifications of 40 CFR part 60, appendix B as well as daily and periodic data quality checks in accordance with 40 CFR part 60, appendix F, procedure 1.

(3) As specified in §63.8(c)(4)(ii), each CEMS must complete a minimum of one cycle of operation (sampling, analyzing, and data recording) for each successive 15-minute period. You must have at least two data points, with each representing a different 15-minute period, to have a valid hour of data.

(4) The CEMS data must be reduced as specified in §63.8(g)(2) and recorded in parts per million or parts per billion (as appropriate for the applicable limitation) at 15 percent oxygen or the equivalent CO_2 concentration.

(b) If you are required to install a continuous parameter monitoring system (CPMS) as specified in Table 5 of this subpart, you must install, operate, and maintain each CPMS according to the requirements in paragraphs (b)(1) through (6) of this section. For an affected source that is complying with the emission limitations and operating limitations on March 9, 2011, the requirements in paragraph (b) of this section are applicable September 6, 2011.

(1) You must prepare a site-specific monitoring plan that addresses the monitoring system design, data collection, and the quality assurance and quality control elements outlined in paragraphs (b)(1)(i) through (v) of this section and in §63.8(d). As specified in §63.8(f)(4), you may request approval of monitoring system quality assurance and quality control procedures alternative to those specified in paragraphs (b)(1) through (5) of this section in your site-specific monitoring plan.

(i) The performance criteria and design specifications for the monitoring system equipment, including the sample interface, detector signal analyzer, and data acquisition and calculations;

(ii) Sampling interface (*e.g.*, thermocouple) location such that the monitoring system will provide representative measurements;

(iii) Equipment performance evaluations, system accuracy audits, or other audit procedures;

(iv) Ongoing operation and maintenance procedures in accordance with provisions in §63.8(c)(1)(ii) and (c)(3); and

(v) Ongoing reporting and recordkeeping procedures in accordance with provisions in §63.10(c), (e)(1), and (e)(2)(i).

(2) You must install, operate, and maintain each CPMS in continuous operation according to the procedures in your site-specific monitoring plan.

(3) The CPMS must collect data at least once every 15 minutes (see also §63.6635).

(4) For a CPMS for measuring temperature range, the temperature sensor must have a minimum tolerance of 2.8 degrees Celsius (5 degrees Fahrenheit) or 1 percent of the measurement range, whichever is larger.

(5) You must conduct the CPMS equipment performance evaluation, system accuracy audits, or other audit procedures specified in your site-specific monitoring plan at least annually.

(6) You must conduct a performance evaluation of each CPMS in accordance with your site-specific monitoring plan.

(c) If you are operating a new or reconstructed stationary RICE which fires landfill gas or digester gas equivalent to 10 percent or more of the gross heat input on an annual basis, you must monitor and record your fuel usage daily with separate fuel meters to measure the volumetric flow rate of each fuel. In addition, you must operate your stationary RICE in a manner which reasonably minimizes HAP emissions.

(d) If you are operating a new or reconstructed emergency 4SLB stationary RICE with a site rating of greater than or equal to 250 and less than or equal to 500 brake HP located at a major source of HAP emissions, you must install a non-resettable hour meter prior to the startup of the engine.

(e) If you own or operate any of the following stationary RICE, you must operate and maintain the stationary RICE and after-treatment control device (if any) according to the manufacturer's emission-related written instructions or develop your own maintenance plan which must provide to the extent practicable for the maintenance and operation of the engine in a manner consistent with good air pollution control practice for minimizing emissions:

(1) An existing stationary RICE with a site rating of less than 100 HP located at a major source of HAP emissions;

(2) An existing emergency or black start stationary RICE with a site rating of less than or equal to 500 HP located at a major source of HAP emissions;

(3) An existing emergency or black start stationary RICE located at an area source of HAP emissions;

(4) An existing non-emergency, non-black start stationary CI RICE with a site rating less than or equal to 300 HP located at an area source of HAP emissions;

(5) An existing non-emergency, non-black start 2SLB stationary RICE located at an area source of HAP emissions;

(6) An existing non-emergency, non-black start stationary RICE located at an area source of HAP emissions which combusts landfill or digester gas equivalent to 10 percent or more of the gross heat input on an annual basis.

(7) An existing non-emergency, non-black start 4SLB stationary RICE with a site rating less than or equal to 500 HP located at an area source of HAP emissions;

(8) An existing non-emergency, non-black start 4SRB stationary RICE with a site rating less than or equal to 500 HP located at an area source of HAP emissions;

(9) An existing, non-emergency, non-black start 4SLB stationary RICE with a site rating greater than 500 HP located at an area source of HAP emissions that is operated 24 hours or less per calendar year; and

(10) An existing, non-emergency, non-black start 4SRB stationary RICE with a site rating greater than 500 HP located at an area source of HAP emissions that is operated 24 hours or less per calendar year.

(f) If you own or operate an existing emergency stationary RICE with a site rating of less than or equal to 500 brake HP located at a major source of HAP emissions or an existing emergency stationary RICE located at an area source of HAP emissions, you must install a non-resettable hour meter if one is not already installed.

(g) If you own or operate an existing non-emergency, non-black start CI engine greater than or equal to 300 HP that is not equipped with a closed crankcase ventilation system, you must comply with either paragraph (g)(1) or paragraph (2) of this section. Owners and operators must follow the manufacturer's specified maintenance requirements for operating and maintaining the open or closed crankcase ventilation systems and replacing the crankcase filters, or can request the Administrator to approve different maintenance requirements that are as protective as manufacturer requirements. Existing CI engines located at area sources in areas of Alaska that meet either §63.6603(b)(1) or §63.6603(b)(2) do not have to meet the requirements of this paragraph (g). Existing CI engines located on offshore vessels that meet §63.6603(c) do not have to meet the requirements of this paragraph (g).

(1) Install a closed crankcase ventilation system that prevents crankcase emissions from being emitted to the atmosphere, or

(2) Install an open crankcase filtration emission control system that reduces emissions from the crankcase by filtering the exhaust stream to remove oil mist, particulates and metals.

(h) If you operate a new, reconstructed, or existing stationary engine, you must minimize the engine's time spent at idle during startup and minimize the engine's startup time to a period needed for appropriate and safe loading of the engine, not to exceed 30 minutes, after which time the emission standards applicable to all times other than startup in Tables 1a, 2a, 2c, and 2d to this subpart apply.

(i) If you own or operate a stationary CI engine that is subject to the work, operation or management practices in items 1 or 2 of Table 2c to this subpart or in items 1 or 4 of Table 2d to this subpart, you have the option of utilizing an oil analysis program in order to extend the specified oil change requirement in Tables 2c and 2d to this subpart. The oil analysis must be performed at the same frequency specified for changing the oil in Table 2c or 2d to this subpart. The analysis program must at a minimum analyze the following three parameters: Total Base Number, viscosity, and percent water content. The condemning limits for these parameters are as follows: Total Base Number is less than 30 percent of the Total Base Number of the oil when new; viscosity of the oil has changed by more than 20 percent from the viscosity of the oil when new; or percent water content (by volume) is greater than 0.5. If all of these condemning limits are not exceeded, the engine owner or operator is not required to change the oil. If any of the limits are exceeded, the engine owner or operator must change the oil within 2 business days of receiving the results of the analysis; if the engine is not in operation when the results of the analysis are received, the engine owner or operator must change the oil within 2 business days or before commencing operation, whichever is later. The owner or operator must keep records of the parameters that are analyzed as part of the program, the results of the analysis, and the oil changes for the engine. The analysis program must be part of the maintenance plan for the engine.

(j) If you own or operate a stationary SI engine that is subject to the work, operation or management practices in items 6, 7, or 8 of Table 2c to this subpart or in items 5, 6, 7, 9, or 11 of Table 2d to this subpart, you have the option of utilizing an oil analysis program in order to extend the specified oil change requirement in Tables 2c and 2d to this subpart. The oil analysis must be performed at the same frequency specified for changing the oil in Table 2c or 2d to this subpart. The analysis program must at a minimum analyze the following three parameters: Total Acid Number, viscosity, and percent water content. The condemning limits for these parameters are as follows: Total Acid Number increases by more than 3.0 milligrams of potassium hydroxide (KOH) per gram from Total Acid Number of the oil when new; viscosity of the oil has changed by more than 20 percent from the viscosity of the oil when new; or percent water content (by volume) is greater than 0.5. If all of these condemning limits are not exceeded, the engine owner or operator is not required to change the oil. If any of the limits are exceeded, the engine owner or operator must change the oil within 2 business days of receiving the results of the analysis; if the engine is not in operation when the results of the analysis are received, the engine owner or operator must change the oil within 2 business days or before commencing operation, whichever is later. The owner or operator must keep records of the parameters that are analyzed as part of the program, the results of the analysis, and the oil changes for the engine. The analysis program must be part of the maintenance plan for the engine.

[69 FR 33506, June 15, 2004, as amended at 73 FR 3606, Jan. 18, 2008; 75 FR 9676, Mar. 3, 2010; 75 FR 51589, Aug. 20, 2010; 76 FR 12866, Mar. 9, 2011; 78 FR 6703, Jan. 30, 2013]

§63.6630 How do I demonstrate initial compliance with the emission limitations, operating limitations, and other requirements?

(a) You must demonstrate initial compliance with each emission limitation, operating limitation, and other requirement that applies to you according to Table 5 of this subpart.

(b) During the initial performance test, you must establish each operating limitation in Tables 1b and 2b of this subpart that applies to you.

(c) You must submit the Notification of Compliance Status containing the results of the initial compliance demonstration according to the requirements in §63.6645.

(d) Non-emergency 4SRB stationary RICE complying with the requirement to reduce formaldehyde emissions by 76 percent or more can demonstrate initial compliance with the formaldehyde emission limit by testing for THC instead of formaldehyde. The testing must be conducted according to the requirements in Table 4 of this subpart. The average reduction of emissions of THC determined from the performance test must be equal to or greater than 30 percent.

(e) The initial compliance demonstration required for existing non-emergency 4SLB and 4SRB stationary RICE with a site rating of more than 500 HP located at an area source of HAP that are not remote stationary RICE and that are operated more than 24 hours per calendar year must be conducted according to the following requirements:

(1) The compliance demonstration must consist of at least three test runs.

(2) Each test run must be of at least 15 minute duration, except that each test conducted using the method in appendix A to this subpart must consist of at least one measurement cycle and include at least 2 minutes of test data phase measurement.

(3) If you are demonstrating compliance with the CO concentration or CO percent reduction requirement, you must measure CO emissions using one of the CO measurement methods specified in Table 4 of this subpart, or using appendix A to this subpart.

(4) If you are demonstrating compliance with the THC percent reduction requirement, you must measure THC emissions using Method 25A, reported as propane, of 40 CFR part 60, appendix A.

(5) You must measure O_2 using one of the O_2 measurement methods specified in Table 4 of this subpart. Measurements to determine O_2 concentration must be made at the same time as the measurements for CO or THC concentration.

(6) If you are demonstrating compliance with the CO or THC percent reduction requirement, you must measure CO or THC emissions and O_2 emissions simultaneously at the inlet and outlet of the control device.

[69 FR 33506, June 15, 2004, as amended at 78 FR 6704, Jan. 30, 2013]

CONTINUOUS COMPLIANCE REQUIREMENTS

§63.6635 How do I monitor and collect data to demonstrate continuous compliance?

(a) If you must comply with emission and operating limitations, you must monitor and collect data according to this section.

(b) Except for monitor malfunctions, associated repairs, required performance evaluations, and required quality assurance or control activities, you must monitor continuously at all times that the stationary RICE is operating. A monitoring malfunction is any sudden, infrequent, not reasonably preventable failure of the monitoring to provide valid data. Monitoring failures that are caused in part by poor maintenance or careless operation are not malfunctions.

(c) You may not use data recorded during monitoring malfunctions, associated repairs, and required quality assurance or control activities in data averages and calculations used to report emission or operating levels. You must, however, use all the valid data collected during all other periods.

[69 FR 33506, June 15, 2004, as amended at 76 FR 12867, Mar. 9, 2011]

§63.6640 How do I demonstrate continuous compliance with the emission limitations, operating limitations, and other requirements?

(a) You must demonstrate continuous compliance with each emission limitation, operating limitation, and other requirements in Tables 1a and 1b, Tables 2a and 2b, Table 2c, and Table 2d to this subpart that apply to you according to methods specified in Table 6 to this subpart.

(b) You must report each instance in which you did not meet each emission limitation or operating limitation in Tables 1a and 1b, Tables 2a and 2b, Table 2c, and Table 2d to this subpart that apply to you. These instances are deviations from the emission and operating limitations in this subpart. These deviations must be reported according to the requirements in §63.6650. If you change your catalyst, you must reestablish the values of the operating parameters measured during the initial performance test. When you reestablish the values of your operating parameters, you must also conduct a performance test to demonstrate that you are meeting the required emission limitation applicable to your stationary RICE.

(c) The annual compliance demonstration required for existing non-emergency 4SLB and 4SRB stationary RICE with a site rating of more than 500 HP located at an area source of HAP that are not remote stationary RICE and that are operated more than 24 hours per calendar year must be conducted according to the following requirements:

(1) The compliance demonstration must consist of at least one test run.

(2) Each test run must be of at least 15 minute duration, except that each test conducted using the method in appendix A to this subpart must consist of at least one measurement cycle and include at least 2 minutes of test data phase measurement.

(3) If you are demonstrating compliance with the CO concentration or CO percent reduction requirement, you must measure CO emissions using one of the CO measurement methods specified in Table 4 of this subpart, or using appendix A to this subpart.

(4) If you are demonstrating compliance with the THC percent reduction requirement, you must measure THC emissions using Method 25A, reported as propane, of 40 CFR part 60, appendix A.

(5) You must measure O_2 using one of the O_2 measurement methods specified in Table 4 of this subpart. Measurements to determine O_2 concentration must be made at the same time as the measurements for CO or THC concentration.

(6) If you are demonstrating compliance with the CO or THC percent reduction requirement, you must measure CO or THC emissions and O_2 emissions simultaneously at the inlet and outlet of the control device.

(7) If the results of the annual compliance demonstration show that the emissions exceed the levels specified in Table 6 of this subpart, the stationary RICE must be shut down as soon as safely possible, and appropriate corrective action must be taken (e.g., repairs, catalyst cleaning, catalyst replacement). The stationary RICE must be retested within 7 days of being restarted and the emissions must meet the levels specified in Table 6 of this subpart. If the retest shows that the emissions continue to exceed the specified levels, the stationary RICE must again be shut down as soon as safely possible, and the stationary RICE may not operate, except for purposes of startup and testing, until the owner/operator demonstrates through testing that the emissions do not exceed the levels specified in Table 6 of this subpart.

(d) For new, reconstructed, and rebuilt stationary RICE, deviations from the emission or operating limitations that occur during the first 200 hours of operation from engine startup (engine burn-in period) are not violations. Rebuilt stationary RICE means a stationary RICE that has been rebuilt as that term is defined in 40 CFR 94.11(a).

(e) You must also report each instance in which you did not meet the requirements in Table 8 to this subpart that apply to you. If you own or operate a new or reconstructed stationary RICE with a site rating of less than or equal to 500 brake HP located at a major source of HAP emissions (except new or reconstructed 4SLB engines greater than or equal to 250 and less than or equal to 500 brake HP), a new or reconstructed stationary RICE located at an area source of HAP emissions, or any of the following RICE with a site rating of more than 500 brake HP located at a major source of HAP emissions, you do not need to comply with the requirements in Table 8 to this subpart: An existing 2SLB stationary RICE, an existing 4SLB stationary RICE, an existing emergency stationary RICE, an existing limited use stationary RICE, or an existing

stationary RICE which fires landfill gas or digester gas equivalent to 10 percent or more of the gross heat input on an annual basis. If you own or operate any of the following RICE with a site rating of more than 500 brake HP located at a major source of HAP emissions, you do not need to comply with the requirements in Table 8 to this subpart, except for the initial notification requirements: a new or reconstructed stationary RICE that combusts landfill gas or digester gas equivalent to 10 percent or more of the gross heat input on an annual basis, a new or reconstructed emergency stationary RICE, or a new or reconstructed limited use stationary RICE.

(f) If you own or operate an emergency stationary RICE, you must operate the emergency stationary RICE according to the requirements in paragraphs (f)(1) through (4) of this section. In order for the engine to be considered an emergency stationary RICE under this subpart, any operation other than emergency operation, maintenance and testing, emergency demand response, and operation in non-emergency situations for 50 hours per year, as described in paragraphs (f)(1) through (4) of this section, is prohibited. If you do not operate the engine according to the requirements in paragraphs (f)(1) through (4) of this section, the engine will not be considered an emergency engine under this subpart and must meet all requirements for non-emergency engines.

(1) There is no time limit on the use of emergency stationary RICE in emergency situations.

(2) You may operate your emergency stationary RICE for any combination of the purposes specified in paragraphs (f)(2)(i) through (iii) of this section for a maximum of 100 hours per calendar year. Any operation for non-emergency situations as allowed by paragraphs (f)(3) and (4) of this section counts as part of the 100 hours per calendar year allowed by this paragraph (f)(2).

(i) Emergency stationary RICE may be operated for maintenance checks and readiness testing, provided that the tests are recommended by federal, state or local government, the manufacturer, the vendor, the regional transmission organization or equivalent balancing authority and transmission operator, or the insurance company associated with the engine. The owner or operator may petition the Administrator for approval of additional hours to be used for maintenance checks and readiness testing, but a petition is not required if the owner or operator maintains records indicating that federal, state, or local standards require maintenance and testing of emergency RICE beyond 100 hours per calendar year.

(ii) Emergency stationary RICE may be operated for emergency demand response for periods in which the Reliability Coordinator under the North American Electric Reliability Corporation (NERC) Reliability Standard EOP-002-3, Capacity and Energy Emergencies (incorporated by reference, see §63.14), or other authorized entity as determined by the Reliability Coordinator, has declared an Energy Emergency Alert Level 2 as defined in the NERC Reliability Standard EOP-002-3.

(iii) Emergency stationary RICE may be operated for periods where there is a deviation of voltage or frequency of 5 percent or greater below standard voltage or frequency.

(3) Emergency stationary RICE located at major sources of HAP may be operated for up to 50 hours per calendar year in non-emergency situations. The 50 hours of operation in non-emergency situations are counted as part of the 100 hours per calendar year for maintenance and testing and emergency demand response provided in paragraph (f)(2) of this section. The 50 hours per year for non-emergency situations cannot be used for peak shaving or non-emergency demand response, or to generate income for a facility to supply power to an electric grid or otherwise supply power as part of a financial arrangement with another entity.

(4) Emergency stationary RICE located at area sources of HAP may be operated for up to 50 hours per calendar year in non-emergency situations. The 50 hours of operation in non-emergency situations are counted as part of the 100 hours per calendar year for maintenance and testing and emergency demand response provided in paragraph (f)(2) of this section. Except as provided in paragraphs (f)(4)(i) and (ii) of this section, the 50 hours per year for non-emergency situations cannot be used for peak shaving or non-emergency demand response, or to generate income for a facility to an electric grid or otherwise supply power as part of a financial arrangement with another entity.

(i) Prior to May 3, 2014, the 50 hours per year for non-emergency situations can be used for peak shaving or non-emergency demand response to generate income for a facility, or to otherwise supply power as part of a financial arrangement with another entity if the engine is operated as part of a peak shaving (load management program) with the local distribution system operator and the power is provided only to the facility itself or to support the local distribution system.

(ii) The 50 hours per year for non-emergency situations can be used to supply power as part of a financial arrangement with another entity if all of the following conditions are met:

(A) The engine is dispatched by the local balancing authority or local transmission and distribution system operator.

(B) The dispatch is intended to mitigate local transmission and/or distribution limitations so as to avert potential voltage collapse or line overloads that could lead to the interruption of power supply in a local area or region.

(C) The dispatch follows reliability, emergency operation or similar protocols that follow specific NERC, regional, state, public utility commission or local standards or guidelines.

(D) The power is provided only to the facility itself or to support the local transmission and distribution system.

(E) The owner or operator identifies and records the entity that dispatches the engine and the specific NERC, regional, state, public utility commission or local standards or guidelines that are being followed for dispatching the engine. The local balancing authority or local transmission and distribution system operator may keep these records on behalf of the engine owner or operator.

[69 FR 33506, June 15, 2004, as amended at 71 FR 20467, Apr. 20, 2006; 73 FR 3606, Jan. 18, 2008; 75 FR 9676, Mar. 3, 2010; 75 FR 51591, Aug. 20, 2010; 78 FR 6704, Jan. 30, 2013]

NOTIFICATIONS, REPORTS, AND RECORDS

§63.6645 What notifications must I submit and when?

(a) You must submit all of the notifications in §§63.7(b) and (c), 63.8(e), (f)(4) and (f)(6), 63.9(b) through (e), and (g) and (h) that apply to you by the dates specified if you own or operate any of the following;

(1) An existing stationary RICE with a site rating of less than or equal to 500 brake HP located at a major source of HAP emissions.

(2) An existing stationary RICE located at an area source of HAP emissions.

(3) A stationary RICE with a site rating of more than 500 brake HP located at a major source of HAP emissions.

(4) A new or reconstructed 4SLB stationary RICE with a site rating of greater than or equal to 250 HP located at a major source of HAP emissions.

(5) This requirement does not apply if you own or operate an existing stationary RICE less than 100 HP, an existing stationary emergency RICE, or an existing stationary RICE that is not subject to any numerical emission standards.

(b) As specified in §63.9(b)(2), if you start up your stationary RICE with a site rating of more than 500 brake HP located at a major source of HAP emissions before the effective date of this subpart, you must submit an Initial Notification not later than December 13, 2004.

(c) If you start up your new or reconstructed stationary RICE with a site rating of more than 500 brake HP located at a major source of HAP emissions on or after August 16, 2004, you must submit an Initial Notification not later than 120 days after you become subject to this subpart.

(d) As specified in §63.9(b)(2), if you start up your stationary RICE with a site rating of equal to or less than 500 brake HP located at a major source of HAP emissions before the effective date of this subpart and you are required to submit an initial notification, you must submit an Initial Notification not later than July 16, 2008.

(e) If you start up your new or reconstructed stationary RICE with a site rating of equal to or less than 500 brake HP located at a major source of HAP emissions on or after March 18, 2008 and you are required to submit an initial notification, you must submit an Initial Notification not later than 120 days after you become subject to this subpart.

(f) If you are required to submit an Initial Notification but are otherwise not affected by the requirements of this subpart, in accordance with §63.6590(b), your notification should include the information in §63.9(b)(2)(i) through (v), and a statement that your stationary RICE has no

additional requirements and explain the basis of the exclusion (for example, that it operates exclusively as an emergency stationary RICE if it has a site rating of more than 500 brake HP located at a major source of HAP emissions).

(g) If you are required to conduct a performance test, you must submit a Notification of Intent to conduct a performance test at least 60 days before the performance test is scheduled to begin as required in §63.7(b)(1).

(h) If you are required to conduct a performance test or other initial compliance demonstration as specified in Tables 4 and 5 to this subpart, you must submit a Notification of Compliance Status according to §63.9(h)(2)(ii).

(1) For each initial compliance demonstration required in Table 5 to this subpart that does not include a performance test, you must submit the Notification of Compliance Status before the close of business on the 30th day following the completion of the initial compliance demonstration.

(2) For each initial compliance demonstration required in Table 5 to this subpart that includes a performance test conducted according to the requirements in Table 3 to this subpart, you must submit the Notification of Compliance Status, including the performance test results, before the close of business on the 60th day following the completion of the performance test according to §63.10(d)(2).

(i) If you own or operate an existing non-emergency CI RICE with a site rating of more than 300 HP located at an area source of HAP emissions that is certified to the Tier 1 or Tier 2 emission standards in Table 1 of 40 CFR 89.112 and subject to an enforceable state or local standard requiring engine replacement and you intend to meet management practices rather than emission limits, as specified in §63.6603(d), you must submit a notification by March 3, 2013, stating that you intend to use the provision in §63.6603(d) and identifying the state or local regulation that the engine is subject to.

[73 FR 3606, Jan. 18, 2008, as amended at 75 FR 9677, Mar. 3, 2010; 75 FR 51591, Aug. 20, 2010; 78 FR 6705, Jan. 30, 2013]

§63.6650 What reports must I submit and when?

(a) You must submit each report in Table 7 of this subpart that applies to you.

(b) Unless the Administrator has approved a different schedule for submission of reports under §63.10(a), you must submit each report by the date in Table 7 of this subpart and according to the requirements in paragraphs (b)(1) through (b)(9) of this section.

(1) For semiannual Compliance reports, the first Compliance report must cover the period beginning on the compliance date that is specified for your affected source in §63.6595 and ending on June 30 or December 31, whichever date is the first date following the end of the first calendar half after the compliance date that is specified for your source in §63.6595.

(2) For semiannual Compliance reports, the first Compliance report must be postmarked or delivered no later than July 31 or January 31, whichever date follows the end of the first calendar half after the compliance date that is specified for your affected source in §63.6595.

(3) For semiannual Compliance reports, each subsequent Compliance report must cover the semiannual reporting period from January 1 through June 30 or the semiannual reporting period from July 1 through December 31.

(4) For semiannual Compliance reports, each subsequent Compliance report must be postmarked or delivered no later than July 31 or January 31, whichever date is the first date following the end of the semiannual reporting period.

(5) For each stationary RICE that is subject to permitting regulations pursuant to 40 CFR part 70 or 71, and if the permitting authority has established dates for submitting semiannual reports pursuant to 40 CFR 70.6(a)(3)(iii)(A) or 40 CFR 71.6 (a)(3)(iii)(A), you may submit the first and subsequent Compliance reports according to the dates the permitting authority has established instead of according to the dates in paragraphs (b)(1) through (b)(4) of this section.

(6) For annual Compliance reports, the first Compliance report must cover the period beginning on the compliance date that is specified for your affected source in §63.6595 and ending on December 31.

(7) For annual Compliance reports, the first Compliance report must be postmarked or delivered no later than January 31 following the end of the first calendar year after the compliance date that is specified for your affected source in §63.6595.

(8) For annual Compliance reports, each subsequent Compliance report must cover the annual reporting period from January 1 through December 31.

(9) For annual Compliance reports, each subsequent Compliance report must be postmarked or delivered no later than January 31.

(c) The Compliance report must contain the information in paragraphs (c)(1) through (6) of this section.

(1) Company name and address.

(2) Statement by a responsible official, with that official's name, title, and signature, certifying the accuracy of the content of the report.

(3) Date of report and beginning and ending dates of the reporting period.

(4) If you had a malfunction during the reporting period, the compliance report must include the number, duration, and a brief description for each type of malfunction which occurred during the reporting period and which caused or may have caused any applicable emission limitation to be exceeded. The report must also include a description of actions taken by an owner or operator

during a malfunction of an affected source to minimize emissions in accordance with §63.6605(b), including actions taken to correct a malfunction.

(5) If there are no deviations from any emission or operating limitations that apply to you, a statement that there were no deviations from the emission or operating limitations during the reporting period.

(6) If there were no periods during which the continuous monitoring system (CMS), including CEMS and CPMS, was out-of-control, as specified in §63.8(c)(7), a statement that there were no periods during which the CMS was out-of-control during the reporting period.

(d) For each deviation from an emission or operating limitation that occurs for a stationary RICE where you are not using a CMS to comply with the emission or operating limitations in this subpart, the Compliance report must contain the information in paragraphs (c)(1) through (4) of this section and the information in paragraphs (d)(1) and (2) of this section.

(1) The total operating time of the stationary RICE at which the deviation occurred during the reporting period.

(2) Information on the number, duration, and cause of deviations (including unknown cause, if applicable), as applicable, and the corrective action taken.

(e) For each deviation from an emission or operating limitation occurring for a stationary RICE where you are using a CMS to comply with the emission and operating limitations in this subpart, you must include information in paragraphs (c)(1) through (4) and (e)(1) through (12) of this section.

(1) The date and time that each malfunction started and stopped.

(2) The date, time, and duration that each CMS was inoperative, except for zero (low-level) and high-level checks.

(3) The date, time, and duration that each CMS was out-of-control, including the information in §63.8(c)(8).

(4) The date and time that each deviation started and stopped, and whether each deviation occurred during a period of malfunction or during another period.

(5) A summary of the total duration of the deviation during the reporting period, and the total duration as a percent of the total source operating time during that reporting period.

(6) A breakdown of the total duration of the deviations during the reporting period into those that are due to control equipment problems, process problems, other known causes, and other unknown causes.

(7) A summary of the total duration of CMS downtime during the reporting period, and the total duration of CMS downtime as a percent of the total operating time of the stationary RICE at which the CMS downtime occurred during that reporting period.

(8) An identification of each parameter and pollutant (CO or formaldehyde) that was monitored at the stationary RICE.

(9) A brief description of the stationary RICE.

(10) A brief description of the CMS.

(11) The date of the latest CMS certification or audit.

(12) A description of any changes in CMS, processes, or controls since the last reporting period.

(f) Each affected source that has obtained a title V operating permit pursuant to 40 CFR part 70 or 71 must report all deviations as defined in this subpart in the semiannual monitoring report required by 40 CFR 70.6 (a)(3)(iii)(A) or 40 CFR 71.6(a)(3)(iii)(A). If an affected source submits a Compliance report pursuant to Table 7 of this subpart along with, or as part of, the semiannual monitoring report required by 40 CFR 70.6(a)(3)(iii)(A) or 40 CFR 71.6(a)(3)(iii)(A), and the Compliance report includes all required information concerning deviations from any emission or operating limitation in this subpart, submission of the Compliance report shall be deemed to satisfy any obligation to report the same deviations in the semiannual monitoring report. However, submission of a Compliance report shall not otherwise affect any obligation the affected source may have to report deviations from permit requirements to the permit authority.

(g) If you are operating as a new or reconstructed stationary RICE which fires landfill gas or digester gas equivalent to 10 percent or more of the gross heat input on an annual basis, you must submit an annual report according to Table 7 of this subpart by the date specified unless the Administrator has approved a different schedule, according to the information described in paragraphs (b)(1) through (b)(5) of this section. You must report the data specified in (g)(1) through (g)(3) of this section.

(1) Fuel flow rate of each fuel and the heating values that were used in your calculations. You must also demonstrate that the percentage of heat input provided by landfill gas or digester gas is equivalent to 10 percent or more of the total fuel consumption on an annual basis.

(2) The operating limits provided in your federally enforceable permit, and any deviations from these limits.

(3) Any problems or errors suspected with the meters.

(h) If you own or operate an emergency stationary RICE with a site rating of more than 100 brake HP that operates or is contractually obligated to be available for more than 15 hours per

calendar year for the purposes specified in §63.6640(f)(2)(ii) and (iii) or that operates for the purpose specified in §63.6640(f)(4)(ii), you must submit an annual report according to the requirements in paragraphs (h)(1) through (3) of this section.

(1) The report must contain the following information:

(i) Company name and address where the engine is located.

(ii) Date of the report and beginning and ending dates of the reporting period.

(iii) Engine site rating and model year.

(iv) Latitude and longitude of the engine in decimal degrees reported to the fifth decimal place.

(v) Hours operated for the purposes specified in §63.6640(f)(2)(ii) and (iii), including the date, start time, and end time for engine operation for the purposes specified in §63.6640(f)(2)(ii) and (iii).

(vi) Number of hours the engine is contractually obligated to be available for the purposes specified in §63.6640(f)(2)(ii) and (iii).

(vii) Hours spent for operation for the purpose specified in §63.6640(f)(4)(ii), including the date, start time, and end time for engine operation for the purposes specified in §63.6640(f)(4)(ii). The report must also identify the entity that dispatched the engine and the situation that necessitated the dispatch of the engine.

(viii) If there were no deviations from the fuel requirements in §63.6604 that apply to the engine (if any), a statement that there were no deviations from the fuel requirements during the reporting period.

(ix) If there were deviations from the fuel requirements in §63.6604 that apply to the engine (if any), information on the number, duration, and cause of deviations, and the corrective action taken.

(2) The first annual report must cover the calendar year 2015 and must be submitted no later than March 31, 2016. Subsequent annual reports for each calendar year must be submitted no later than March 31 of the following calendar year.

(3) The annual report must be submitted electronically using the subpart specific reporting form in the Compliance and Emissions Data Reporting Interface (CEDRI) that is accessed through EPA's Central Data Exchange (CDX) (*www.epa.gov/cdx*). However, if the reporting form specific to this subpart is not available in CEDRI at the time that the report is due, the written report must be submitted to the Administrator at the appropriate address listed in §63.13.

[69 FR 33506, June 15, 2004, as amended at 75 FR 9677, Mar. 3, 2010; 78 FR 6705, Jan. 30, 2013]

§63.6655 What records must I keep?

(a) If you must comply with the emission and operating limitations, you must keep the records described in paragraphs (a)(1) through (a)(5), (b)(1) through (b)(3) and (c) of this section.

(1) A copy of each notification and report that you submitted to comply with this subpart, including all documentation supporting any Initial Notification or Notification of Compliance Status that you submitted, according to the requirement in §63.10(b)(2)(xiv).

(2) Records of the occurrence and duration of each malfunction of operation (*i.e.*, process equipment) or the air pollution control and monitoring equipment.

(3) Records of performance tests and performance evaluations as required in §63.10(b)(2)(viii).

(4) Records of all required maintenance performed on the air pollution control and monitoring equipment.

(5) Records of actions taken during periods of malfunction to minimize emissions in accordance with §63.6605(b), including corrective actions to restore malfunctioning process and air pollution control and monitoring equipment to its normal or usual manner of operation.

(b) For each CEMS or CPMS, you must keep the records listed in paragraphs (b)(1) through (3) of this section.

(1) Records described in §63.10(b)(2)(vi) through (xi).

(2) Previous (*i.e.*, superseded) versions of the performance evaluation plan as required in §63.8(d)(3).

(3) Requests for alternatives to the relative accuracy test for CEMS or CPMS as required in §63.8(f)(6)(i), if applicable.

(c) If you are operating a new or reconstructed stationary RICE which fires landfill gas or digester gas equivalent to 10 percent or more of the gross heat input on an annual basis, you must keep the records of your daily fuel usage monitors.

(d) You must keep the records required in Table 6 of this subpart to show continuous compliance with each emission or operating limitation that applies to you.

(e) You must keep records of the maintenance conducted on the stationary RICE in order to demonstrate that you operated and maintained the stationary RICE and after-treatment control

device (if any) according to your own maintenance plan if you own or operate any of the following stationary RICE;

(1) An existing stationary RICE with a site rating of less than 100 brake HP located at a major source of HAP emissions.

(2) An existing stationary emergency RICE.

(3) An existing stationary RICE located at an area source of HAP emissions subject to management practices as shown in Table 2d to this subpart.

(f) If you own or operate any of the stationary RICE in paragraphs (f)(1) through (2) of this section, you must keep records of the hours of operation of the engine that is recorded through the non-resettable hour meter. The owner or operator must document how many hours are spent for emergency operation, including what classified the operation as emergency and how many hours are spent for non-emergency operation. If the engine is used for the purposes specified in §63.6640(f)(2)(ii) or (iii) or §63.6640(f)(4)(ii), the owner or operator must keep records of the notification of the emergency situation, and the date, start time, and end time of engine operation for these purposes.

(1) An existing emergency stationary RICE with a site rating of less than or equal to 500 brake HP located at a major source of HAP emissions that does not meet the standards applicable to non-emergency engines.

(2) An existing emergency stationary RICE located at an area source of HAP emissions that does not meet the standards applicable to non-emergency engines.

[69 FR 33506, June 15, 2004, as amended at 75 FR 9678, Mar. 3, 2010; 75 FR 51592, Aug. 20, 2010; 78 FR 6706, Jan. 30, 2013]

§63.6660 In what form and how long must I keep my records?

(a) Your records must be in a form suitable and readily available for expeditious review according to §63.10(b)(1).

(b) As specified in §63.10(b)(1), you must keep each record for 5 years following the date of each occurrence, measurement, maintenance, corrective action, report, or record.

(c) You must keep each record readily accessible in hard copy or electronic form for at least 5 years after the date of each occurrence, measurement, maintenance, corrective action, report, or record, according to §63.10(b)(1).

[69 FR 33506, June 15, 2004, as amended at 75 FR 9678, Mar. 3, 2010]

OTHER REQUIREMENTS AND INFORMATION

§63.6665 What parts of the General Provisions apply to me?

Table 8 to this subpart shows which parts of the General Provisions in §§63.1 through 63.15 apply to you. If you own or operate a new or reconstructed stationary RICE with a site rating of less than or equal to 500 brake HP located at a major source of HAP emissions (except new or reconstructed 4SLB engines greater than or equal to 250 and less than or equal to 500 brake HP), a new or reconstructed stationary RICE located at an area source of HAP emissions, or any of the following RICE with a site rating of more than 500 brake HP located at a major source of HAP emissions, you do not need to comply with any of the requirements of the General Provisions specified in Table 8: An existing 2SLB stationary RICE, an existing 4SLB stationary RICE, an existing stationary RICE that combusts landfill or digester gas equivalent to 10 percent or more of the gross heat input on an annual basis, an existing emergency stationary RICE, or an existing limited use stationary RICE. If you own or operate any of the following RICE with a site rating of more than 500 brake HP located at a major source of HAP emissions, you do not need to comply with the requirements in the General Provisions specified in Table 8 except for the initial notification requirements: A new stationary RICE that combusts landfill gas or digester gas equivalent to 10 percent or more of the gross heat input on an annual basis, a new emergency stationary RICE, or a new limited use stationary RICE.

[75 FR 9678, Mar. 3, 2010]

§63.6670 Who implements and enforces this subpart?

(a) This subpart is implemented and enforced by the U.S. EPA, or a delegated authority such as your State, local, or tribal agency. If the U.S. EPA Administrator has delegated authority to your State, local, or tribal agency, then that agency (as well as the U.S. EPA) has the authority to implement and enforce this subpart. You should contact your U.S. EPA Regional Office to find out whether this subpart is delegated to your State, local, or tribal agency.

(b) In delegating implementation and enforcement authority of this subpart to a State, local, or tribal agency under 40 CFR part 63, subpart E, the authorities contained in paragraph (c) of this section are retained by the Administrator of the U.S. EPA and are not transferred to the State, local, or tribal agency.

(c) The authorities that will not be delegated to State, local, or tribal agencies are:

(1) Approval of alternatives to the non-opacity emission limitations and operating limitations in §63.6600 under §63.6(g).

(2) Approval of major alternatives to test methods under §63.7(e)(2)(ii) and (f) and as defined in §63.90.

(3) Approval of major alternatives to monitoring under §63.8(f) and as defined in §63.90.

(4) Approval of major alternatives to recordkeeping and reporting under §63.10(f) and as defined in §63.90.

(5) Approval of a performance test which was conducted prior to the effective date of the rule, as specified in §63.6610(b).

§63.6675 What definitions apply to this subpart?

Terms used in this subpart are defined in the Clean Air Act (CAA); in 40 CFR 63.2, the General Provisions of this part; and in this section as follows:

Alaska Railbelt Grid means the service areas of the six regulated public utilities that extend from Fairbanks to Anchorage and the Kenai Peninsula. These utilities are Golden Valley Electric Association; Chugach Electric Association; Matanuska Electric Association; Homer Electric Association; Anchorage Municipal Light & Power; and the City of Seward Electric System.

Area source means any stationary source of HAP that is not a major source as defined in part 63.

Associated equipment as used in this subpart and as referred to in section 112(n)(4) of the CAA, means equipment associated with an oil or natural gas exploration or production well, and includes all equipment from the well bore to the point of custody transfer, except glycol dehydration units, storage vessels with potential for flash emissions, combustion turbines, and stationary RICE.

Backup power for renewable energy means an engine that provides backup power to a facility that generates electricity from renewable energy resources, as that term is defined in Alaska Statute 42.45.045(l)(5) (incorporated by reference, see §63.14).

Black start engine means an engine whose only purpose is to start up a combustion turbine.

CAA means the Clean Air Act (42 U.S.C. 7401 *et seq.*, as amended by Public Law 101-549, 104 Stat. 2399).

Commercial emergency stationary RICE means an emergency stationary RICE used in commercial establishments such as office buildings, hotels, stores, telecommunications facilities, restaurants, financial institutions such as banks, doctor's offices, and sports and performing arts facilities.

Compression ignition means relating to a type of stationary internal combustion engine that is not a spark ignition engine.

Custody transfer means the transfer of hydrocarbon liquids or natural gas: After processing and/or treatment in the producing operations, or from storage vessels or automatic transfer facilities or other such equipment, including product loading racks, to pipelines or any other forms of transportation. For the purposes of this subpart, the point at which such liquids or natural gas enters a natural gas processing plant is a point of custody transfer.

Deviation means any instance in which an affected source subject to this subpart, or an owner or operator of such a source:

(1) Fails to meet any requirement or obligation established by this subpart, including but not limited to any emission limitation or operating limitation;

(2) Fails to meet any term or condition that is adopted to implement an applicable requirement in this subpart and that is included in the operating permit for any affected source required to obtain such a permit; or

(3) Fails to meet any emission limitation or operating limitation in this subpart during malfunction, regardless or whether or not such failure is permitted by this subpart.

(4) Fails to satisfy the general duty to minimize emissions established by §63.6(e)(1)(i).

Diesel engine means any stationary RICE in which a high boiling point liquid fuel injected into the combustion chamber ignites when the air charge has been compressed to a temperature sufficiently high for auto-ignition. This process is also known as compression ignition.

Diesel fuel means any liquid obtained from the distillation of petroleum with a boiling point of approximately 150 to 360 degrees Celsius. One commonly used form is fuel oil number 2. Diesel fuel also includes any non-distillate fuel with comparable physical and chemical properties (*e.g.* biodiesel) that is suitable for use in compression ignition engines.

Digester gas means any gaseous by-product of wastewater treatment typically formed through the anaerobic decomposition of organic waste materials and composed principally of methane and CO_2.

Dual-fuel engine means any stationary RICE in which a liquid fuel (typically diesel fuel) is used for compression ignition and gaseous fuel (typically natural gas) is used as the primary fuel.

Emergency stationary RICE means any stationary reciprocating internal combustion engine that meets all of the criteria in paragraphs (1) through (3) of this definition. All emergency stationary RICE must comply with the requirements specified in §63.6640(f) in order to be considered emergency stationary RICE. If the engine does not comply with the requirements specified in §63.6640(f), then it is not considered to be an emergency stationary RICE under this subpart.

(1) The stationary RICE is operated to provide electrical power or mechanical work during an emergency situation. Examples include stationary RICE used to produce power for critical networks or equipment (including power supplied to portions of a facility) when electric power from the local utility (or the normal power source, if the facility runs on its own power production) is interrupted, or stationary RICE used to pump water in the case of fire or flood, etc.

(2) The stationary RICE is operated under limited circumstances for situations not included in paragraph (1) of this definition, as specified in §63.6640(f).

(3) The stationary RICE operates as part of a financial arrangement with another entity in situations not included in paragraph (1) of this definition only as allowed in §63.6640(f)(2)(ii) or (iii) and §63.6640(f)(4)(i) or (ii).

Engine startup means the time from initial start until applied load and engine and associated equipment reaches steady state or normal operation. For stationary engine with catalytic controls, engine startup means the time from initial start until applied load and engine and associated equipment, including the catalyst, reaches steady state or normal operation.

Four-stroke engine means any type of engine which completes the power cycle in two crankshaft revolutions, with intake and compression strokes in the first revolution and power and exhaust strokes in the second revolution.

Gaseous fuel means a material used for combustion which is in the gaseous state at standard atmospheric temperature and pressure conditions.

Gasoline means any fuel sold in any State for use in motor vehicles and motor vehicle engines, or nonroad or stationary engines, and commonly or commercially known or sold as gasoline.

Glycol dehydration unit means a device in which a liquid glycol (including, but not limited to, ethylene glycol, diethylene glycol, or triethylene glycol) absorbent directly contacts a natural gas stream and absorbs water in a contact tower or absorption column (absorber). The glycol contacts and absorbs water vapor and other gas stream constituents from the natural gas and becomes “rich” glycol. This glycol is then regenerated in the glycol dehydration unit reboiler. The “lean” glycol is then recycled.

Hazardous air pollutants (HAP) means any air pollutants listed in or pursuant to section 112(b) of the CAA.

Institutional emergency stationary RICE means an emergency stationary RICE used in institutional establishments such as medical centers, nursing homes, research centers, institutions of higher education, correctional facilities, elementary and secondary schools, libraries, religious establishments, police stations, and fire stations.

ISO standard day conditions means 288 degrees Kelvin (15 degrees Celsius), 60 percent relative humidity and 101.3 kilopascals pressure.

Landfill gas means a gaseous by-product of the land application of municipal refuse typically formed through the anaerobic decomposition of waste materials and composed principally of methane and CO_2.

Lean burn engine means any two-stroke or four-stroke spark ignited engine that does not meet the definition of a rich burn engine.

Limited use stationary RICE means any stationary RICE that operates less than 100 hours per year.

Liquefied petroleum gas means any liquefied hydrocarbon gas obtained as a by-product in petroleum refining of natural gas production.

Liquid fuel means any fuel in liquid form at standard temperature and pressure, including but not limited to diesel, residual/crude oil, kerosene/naphtha (jet fuel), and gasoline.

Major Source, as used in this subpart, shall have the same meaning as in §63.2, except that:

(1) Emissions from any oil or gas exploration or production well (with its associated equipment (as defined in this section)) and emissions from any pipeline compressor station or pump station shall not be aggregated with emissions from other similar units, to determine whether such emission points or stations are major sources, even when emission points are in a contiguous area or under common control;

(2) For oil and gas production facilities, emissions from processes, operations, or equipment that are not part of the same oil and gas production facility, as defined in §63.1271 of subpart HHH of this part, shall not be aggregated;

(3) For production field facilities, only HAP emissions from glycol dehydration units, storage vessel with the potential for flash emissions, combustion turbines and reciprocating internal combustion engines shall be aggregated for a major source determination; and

(4) Emissions from processes, operations, and equipment that are not part of the same natural gas transmission and storage facility, as defined in §63.1271 of subpart HHH of this part, shall not be aggregated.

Malfunction means any sudden, infrequent, and not reasonably preventable failure of air pollution control equipment, process equipment, or a process to operate in a normal or usual manner which causes, or has the potential to cause, the emission limitations in an applicable standard to be exceeded. Failures that are caused in part by poor maintenance or careless operation are not malfunctions.

Natural gas means a naturally occurring mixture of hydrocarbon and non-hydrocarbon gases found in geologic formations beneath the Earth's surface, of which the principal constituent is methane. Natural gas may be field or pipeline quality.

Non-selective catalytic reduction (NSCR) means an add-on catalytic nitrogen oxides (NO_X) control device for rich burn engines that, in a two-step reaction, promotes the conversion of excess oxygen, NO_X, CO, and volatile organic compounds (VOC) into CO_2, nitrogen, and water.

Oil and gas production facility as used in this subpart means any grouping of equipment where hydrocarbon liquids are processed, upgraded (*i.e.*, remove impurities or other constituents to meet contract specifications), or stored prior to the point of custody transfer; or where natural

gas is processed, upgraded, or stored prior to entering the natural gas transmission and storage source category. For purposes of a major source determination, facility (including a building, structure, or installation) means oil and natural gas production and processing equipment that is located within the boundaries of an individual surface site as defined in this section. Equipment that is part of a facility will typically be located within close proximity to other equipment located at the same facility. Pieces of production equipment or groupings of equipment located on different oil and gas leases, mineral fee tracts, lease tracts, subsurface or surface unit areas, surface fee tracts, surface lease tracts, or separate surface sites, whether or not connected by a road, waterway, power line or pipeline, shall not be considered part of the same facility. Examples of facilities in the oil and natural gas production source category include, but are not limited to, well sites, satellite tank batteries, central tank batteries, a compressor station that transports natural gas to a natural gas processing plant, and natural gas processing plants.

Oxidation catalyst means an add-on catalytic control device that controls CO and VOC by oxidation.

Peaking unit or engine means any standby engine intended for use during periods of high demand that are not emergencies.

Percent load means the fractional power of an engine compared to its maximum manufacturer's design capacity at engine site conditions. Percent load may range between 0 percent to above 100 percent.

Potential to emit means the maximum capacity of a stationary source to emit a pollutant under its physical and operational design. Any physical or operational limitation on the capacity of the stationary source to emit a pollutant, including air pollution control equipment and restrictions on hours of operation or on the type or amount of material combusted, stored, or processed, shall be treated as part of its design if the limitation or the effect it would have on emissions is federally enforceable. For oil and natural gas production facilities subject to subpart HH of this part, the potential to emit provisions in §63.760(a) may be used. For natural gas transmission and storage facilities subject to subpart HHH of this part, the maximum annual facility gas throughput for storage facilities may be determined according to §63.1270(a)(1) and the maximum annual throughput for transmission facilities may be determined according to §63.1270(a)(2).

Production field facility means those oil and gas production facilities located prior to the point of custody transfer.

Production well means any hole drilled in the earth from which crude oil, condensate, or field natural gas is extracted.

Propane means a colorless gas derived from petroleum and natural gas, with the molecular structure C_3H_8.

Remote stationary RICE means stationary RICE meeting any of the following criteria:

(1) Stationary RICE located in an offshore area that is beyond the line of ordinary low water along that portion of the coast of the United States that is in direct contact with the open seas and beyond the line marking the seaward limit of inland waters.

(2) Stationary RICE located on a pipeline segment that meets both of the criteria in paragraphs (2)(i) and (ii) of this definition.

(i) A pipeline segment with 10 or fewer buildings intended for human occupancy and no buildings with four or more stories within 220 yards (200 meters) on either side of the centerline of any continuous 1-mile (1.6 kilometers) length of pipeline. Each separate dwelling unit in a multiple dwelling unit building is counted as a separate building intended for human occupancy.

(ii) The pipeline segment does not lie within 100 yards (91 meters) of either a building or a small, well-defined outside area (such as a playground, recreation area, outdoor theater, or other place of public assembly) that is occupied by 20 or more persons on at least 5 days a week for 10 weeks in any 12-month period. The days and weeks need not be consecutive. The building or area is considered occupied for a full day if it is occupied for any portion of the day.

(iii) For purposes of this paragraph (2), the term pipeline segment means all parts of those physical facilities through which gas moves in transportation, including but not limited to pipe, valves, and other appurtenance attached to pipe, compressor units, metering stations, regulator stations, delivery stations, holders, and fabricated assemblies. Stationary RICE located within 50 yards (46 meters) of the pipeline segment providing power for equipment on a pipeline segment are part of the pipeline segment. Transportation of gas means the gathering, transmission, or distribution of gas by pipeline, or the storage of gas. A building is intended for human occupancy if its primary use is for a purpose involving the presence of humans.

(3) Stationary RICE that are not located on gas pipelines and that have 5 or fewer buildings intended for human occupancy and no buildings with four or more stories within a 0.25 mile radius around the engine. A building is intended for human occupancy if its primary use is for a purpose involving the presence of humans.

Residential emergency stationary RICE means an emergency stationary RICE used in residential establishments such as homes or apartment buildings.

Responsible official means responsible official as defined in 40 CFR 70.2.

Rich burn engine means any four-stroke spark ignited engine where the manufacturer's recommended operating air/fuel ratio divided by the stoichiometric air/fuel ratio at full load conditions is less than or equal to 1.1. Engines originally manufactured as rich burn engines, but modified prior to December 19, 2002 with passive emission control technology for NO_X (such as pre-combustion chambers) will be considered lean burn engines. Also, existing engines where there are no manufacturer's recommendations regarding air/fuel ratio will be considered a rich burn engine if the excess oxygen content of the exhaust at full load conditions is less than or equal to 2 percent.

Site-rated HP means the maximum manufacturer's design capacity at engine site conditions.

Spark ignition means relating to either: A gasoline-fueled engine; or any other type of engine with a spark plug (or other sparking device) and with operating characteristics significantly similar to the theoretical Otto combustion cycle. Spark ignition engines usually use a throttle to regulate intake air flow to control power during normal operation. Dual-fuel engines in which a liquid fuel (typically diesel fuel) is used for CI and gaseous fuel (typically natural gas) is used as the primary fuel at an annual average ratio of less than 2 parts diesel fuel to 100 parts total fuel on an energy equivalent basis are spark ignition engines.

Stationary reciprocating internal combustion engine (RICE) means any reciprocating internal combustion engine which uses reciprocating motion to convert heat energy into mechanical work and which is not mobile. Stationary RICE differ from mobile RICE in that a stationary RICE is not a non-road engine as defined at 40 CFR 1068.30, and is not used to propel a motor vehicle or a vehicle used solely for competition.

Stationary RICE test cell/stand means an engine test cell/stand, as defined in subpart PPPPP of this part, that tests stationary RICE.

Stoichiometric means the theoretical air-to-fuel ratio required for complete combustion.

Storage vessel with the potential for flash emissions means any storage vessel that contains a hydrocarbon liquid with a stock tank gas-to-oil ratio equal to or greater than 0.31 cubic meters per liter and an American Petroleum Institute gravity equal to or greater than 40 degrees and an actual annual average hydrocarbon liquid throughput equal to or greater than 79,500 liters per day. Flash emissions occur when dissolved hydrocarbons in the fluid evolve from solution when the fluid pressure is reduced.

Subpart means 40 CFR part 63, subpart ZZZZ.

Surface site means any combination of one or more graded pad sites, gravel pad sites, foundations, platforms, or the immediate physical location upon which equipment is physically affixed.

Two-stroke engine means a type of engine which completes the power cycle in single crankshaft revolution by combining the intake and compression operations into one stroke and the power and exhaust operations into a second stroke. This system requires auxiliary scavenging and inherently runs lean of stoichiometric.

[69 FR 33506, June 15, 2004, as amended at 71 FR 20467, Apr. 20, 2006; 73 FR 3607, Jan. 18, 2008; 75 FR 9679, Mar. 3, 2010; 75 FR 51592, Aug. 20, 2010; 76 FR 12867, Mar. 9, 2011; 78 FR 6706, Jan. 30, 2013]

Table 1a **to Subpart ZZZZ of Part 63—Emission Limitations for Existing, New, and Reconstructed Spark Ignition, 4SRB Stationary RICE >500 HP Located at a Major Source of HAP Emissions**

As stated in §§63.6600 and 63.6640, you must comply with the following emission limitations at 100 percent load plus or minus 10 percent for existing, new and reconstructed 4SRB stationary RICE >500 HP located at a major source of HAP emissions:

For each . . .	**You must meet the following emission limitation, except during periods of startup . . .**	**During periods of startup you must . . .**
1. 4SRB stationary RICE	a. Reduce formaldehyde emissions by 76 percent or more. If you commenced construction or reconstruction between December 19, 2002 and June 15, 2004, you may reduce formaldehyde emissions by 75 percent or more until June 15, 2007 or	Minimize the engine's time spent at idle and minimize the engine's startup time at startup to a period needed for appropriate and safe loading of the engine, not to exceed 30 minutes, after which time the non-startup emission limitations apply.[1]
	b. Limit the concentration of formaldehyde in the stationary RICE exhaust to 350 ppbvd or less at 15 percent O_2	

[1] Sources can petition the Administrator pursuant to the requirements of 40 CFR 63.6(g) for alternative work practices.

[75 FR 9679, Mar. 3, 2010, as amended at 75 FR 51592, Aug. 20, 2010]

Table 1b **to Subpart ZZZZ of Part 63—Operating Limitations for Existing, New, and Reconstructed SI 4SRB Stationary RICE >500 HP Located at a Major Source of HAP Emissions**

As stated in §§63.6600, 63.6603, 63.6630 and 63.6640, you must comply with the following operating limitations for existing, new and reconstructed 4SRB stationary RICE >500 HP located at a major source of HAP emissions:

For each . . .	**You must meet the following operating limitation, except during periods of startup . . .**
1. existing, new and reconstructed 4SRB stationary RICE >500 HP located at a major source of HAP emissions complying with the requirement to reduce formaldehyde emissions by 76 percent or more (or by 75 percent or more, if applicable) and using NSCR; or existing, new and reconstructed 4SRB stationary RICE >500 HP located at a major source of HAP emissions complying with the requirement to limit the concentration of formaldehyde in the	a. maintain your catalyst so that the pressure drop across the catalyst does not change by more than 2 inches of water at 100 percent load plus or minus 10 percent from the pressure drop across the catalyst measured during the initial performance test; and b. maintain the temperature of your stationary RICE exhaust so that the catalyst inlet temperature is greater than or equal to 750 °F and less than or equal to 1250 °F.[1]

stationary RICE exhaust to 350 ppbvd or less at 15 percent O_2 and using NSCR;	
2. existing, new and reconstructed 4SRB stationary RICE >500 HP located at a major source of HAP emissions complying with the requirement to reduce formaldehyde emissions by 76 percent or more (or by 75 percent or more, if applicable) and not using NSCR; or	Comply with any operating limitations approved by the Administrator.
existing, new and reconstructed 4SRB stationary RICE >500 HP located at a major source of HAP emissions complying with the requirement to limit the concentration of formaldehyde in the stationary RICE exhaust to 350 ppbvd or less at 15 percent O_2 and not using NSCR.	

[1]Sources can petition the Administrator pursuant to the requirements of 40 CFR 63.8(f) for a different temperature range.

[78 FR 6706, Jan. 30, 2013]

Table 2a to Subpart ZZZZ of Part 63—Emission Limitations for New and Reconstructed 2SLB and Compression Ignition Stationary RICE >500 HP and New and Reconstructed 4SLB Stationary RICE ≥250 HP Located at a Major Source of HAP Emissions

As stated in §§63.6600 and 63.6640, you must comply with the following emission limitations for new and reconstructed lean burn and new and reconstructed compression ignition stationary RICE at 100 percent load plus or minus 10 percent:

For each . . .	**You must meet the following emission limitation, except during periods of startup . . .**	**During periods of startup you must . . .**
1. 2SLB stationary RICE	a. Reduce CO emissions by 58 percent or more; or b. Limit concentration of formaldehyde in the stationary RICE exhaust to 12 ppmvd or less at 15 percent O_2. If you commenced construction or reconstruction between December 19, 2002 and June 15, 2004, you may limit concentration of formaldehyde to 17 ppmvd or less at 15 percent O_2 until June 15, 2007	Minimize the engine's time spent at idle and minimize the engine's startup time at startup to a period needed for appropriate and safe loading of the engine, not to exceed 30 minutes, after which time the non-startup emission limitations apply.[1]
2. 4SLB stationary RICE	a. Reduce CO emissions by 93 percent or more; or	

	b. Limit concentration of formaldehyde in the stationary RICE exhaust to 14 ppmvd or less at 15 percent O_2	
3. CI stationary RICE	a. Reduce CO emissions by 70 percent or more; or	
	b. Limit concentration of formaldehyde in the stationary RICE exhaust to 580 ppbvd or less at 15 percent O_2	

[1]Sources can petition the Administrator pursuant to the requirements of 40 CFR 63.6(g) for alternative work practices.

[75 FR 9680, Mar. 3, 2010]

Table 2b **to Subpart ZZZZ of Part 63—Operating Limitations for New and Reconstructed 2SLB and CI Stationary RICE >500 HP Located at a Major Source of HAP Emissions, New and Reconstructed 4SLB Stationary RICE ≥250 HP Located at a Major Source of HAP Emissions, Existing CI Stationary RICE >500 HP**

As stated in §§63.6600, 63.6601, 63.6603, 63.6630, and 63.6640, you must comply with the following operating limitations for new and reconstructed 2SLB and CI stationary RICE >500 HP located at a major source of HAP emissions; new and reconstructed 4SLB stationary RICE ≥250 HP located at a major source of HAP emissions; and existing CI stationary RICE >500 HP:

For each . . .	**You must meet the following operating limitation, except during periods of startup . . .**
1. New and reconstructed 2SLB and CI stationary RICE >500 HP located at a major source of HAP emissions and new and reconstructed 4SLB stationary RICE ≥250 HP located at a major source of HAP emissions complying with the requirement to reduce CO emissions and using an oxidation catalyst; and New and reconstructed 2SLB and CI stationary RICE >500 HP located at a major source of HAP emissions and new and reconstructed 4SLB stationary RICE ≥250 HP located at a major source of HAP emissions complying with the requirement to limit the concentration of formaldehyde in the stationary RICE exhaust and using an oxidation catalyst.	a. maintain your catalyst so that the pressure drop across the catalyst does not change by more than 2 inches of water at 100 percent load plus or minus 10 percent from the pressure drop across the catalyst that was measured during the initial performance test; and b. maintain the temperature of your stationary RICE exhaust so that the catalyst inlet temperature is greater than or equal to 450 °F and less than or equal to 1350 °F.[1]

2. Existing CI stationary RICE >500 HP complying with the requirement to limit or reduce the concentration of CO in the stationary RICE exhaust and using an oxidation catalyst	a. maintain your catalyst so that the pressure drop across the catalyst does not change by more than 2 inches of water from the pressure drop across the catalyst that was measured during the initial performance test; and
	b. maintain the temperature of your stationary RICE exhaust so that the catalyst inlet temperature is greater than or equal to 450 °F and less than or equal to 1350 °F.[1]
3. New and reconstructed 2SLB and CI stationary RICE >500 HP located at a major source of HAP emissions and new and reconstructed 4SLB stationary RICE ≥250 HP located at a major source of HAP emissions complying with the requirement to reduce CO emissions and not using an oxidation catalyst; and	Comply with any operating limitations approved by the Administrator.
New and reconstructed 2SLB and CI stationary RICE >500 HP located at a major source of HAP emissions and new and reconstructed 4SLB stationary RICE ≥250 HP located at a major source of HAP emissions complying with the requirement to limit the concentration of formaldehyde in the stationary RICE exhaust and not using an oxidation catalyst; and	
existing CI stationary RICE >500 HP complying with the requirement to limit or reduce the concentration of CO in the stationary RICE exhaust and not using an oxidation catalyst.	

[1]Sources can petition the Administrator pursuant to the requirements of 40 CFR 63.8(f) for a different temperature range.

[78 FR 6707, Jan. 30, 2013]

Table 2c to Subpart ZZZZ of Part 63—Requirements for Existing Compression Ignition Stationary RICE Located at a Major Source of HAP Emissions and Existing Spark Ignition Stationary RICE ≤500 HP Located at a Major Source of HAP Emissions

As stated in §§63.6600, 63.6602, and 63.6640, you must comply with the following requirements for existing compression ignition stationary RICE located at a major source of HAP emissions and existing spark ignition stationary RICE ≤500 HP located at a major source of HAP emissions:

For each . . .	You must meet the following requirement, except during periods of startup . . .	During periods of startup you must . . .
1. Emergency stationary CI RICE and black start stationary CI RICE[1]	a. Change oil and filter every 500 hours of operation or annually, whichever comes first.[2] b. Inspect air cleaner every 1,000 hours of operation or annually, whichever comes first, and replace as necessary; c. Inspect all hoses and belts every 500 hours of operation or annually, whichever comes first, and replace as necessary.[3]	Minimize the engine's time spent at idle and minimize the engine's startup time at startup to a period needed for appropriate and safe loading of the engine, not to exceed 30 minutes, after which time the non-startup emission limitations apply.[3]
2. Non-Emergency, non-black start stationary CI RICE <100 HP	a. Change oil and filter every 1,000 hours of operation or annually, whichever comes first.[2] b. Inspect air cleaner every 1,000 hours of operation or annually, whichever comes first, and replace as necessary; c. Inspect all hoses and belts every 500 hours of operation or annually, whichever comes first, and replace as necessary.[3]	
3. Non-Emergency, non-black start CI stationary RICE 100≤HP≤300 HP	Limit concentration of CO in the stationary RICE exhaust to 230 ppmvd or less at 15 percent O_2.	
4. Non-Emergency, non-black start CI stationary RICE 300<HP≤500	a. Limit concentration of CO in the stationary RICE exhaust to 49 ppmvd or less at 15 percent O_2; or b. Reduce CO emissions by 70 percent or more.	

5. Non-Emergency, non-black start stationary CI RICE >500 HP	a. Limit concentration of CO in the stationary RICE exhaust to 23 ppmvd or less at 15 percent O_2; or b. Reduce CO emissions by 70 percent or more.	
6. Emergency stationary SI RICE and black start stationary SI RICE.[1]	a. Change oil and filter every 500 hours of operation or annually, whichever comes first;[2] b. Inspect spark plugs every 1,000 hours of operation or annually, whichever comes first, and replace as necessary; c. Inspect all hoses and belts every 500 hours of operation or annually, whichever comes first, and replace as necessary.[3]	
7. Non-Emergency, non-black start stationary SI RICE <100 HP that are not 2SLB stationary RICE	a. Change oil and filter every 1,440 hours of operation or annually, whichever comes first;[2] b. Inspect spark plugs every 1,440 hours of operation or annually, whichever comes first, and replace as necessary;	
	c. Inspect all hoses and belts every 1,440 hours of operation or annually, whichever comes first, and replace as necessary.[3]	
8. Non-Emergency, non-black start 2SLB stationary SI RICE <100 HP	a. Change oil and filter every 4,320 hours of operation or annually, whichever comes first;[2] b. Inspect spark plugs every 4,320 hours of operation or annually, whichever comes first, and replace as necessary;	

	c. Inspect all hoses and belts every 4,320 hours of operation or annually, whichever comes first, and replace as necessary.[3]	
9. Non-emergency, non-black start 2SLB stationary RICE 100≤HP≤500	Limit concentration of CO in the stationary RICE exhaust to 225 ppmvd or less at 15 percent O_2.	
10. Non-emergency, non-black start 4SLB stationary RICE 100≤HP≤500	Limit concentration of CO in the stationary RICE exhaust to 47 ppmvd or less at 15 percent O_2.	
11. Non-emergency, non-black start 4SRB stationary RICE 100≤HP≤500	Limit concentration of formaldehyde in the stationary RICE exhaust to 10.3 ppmvd or less at 15 percent O_2.	
12. Non-emergency, non-black start stationary RICE 100≤HP≤500 which combusts landfill or digester gas equivalent to 10 percent or more of the gross heat input on an annual basis	Limit concentration of CO in the stationary RICE exhaust to 177 ppmvd or less at 15 percent O_2.	

[1]If an emergency engine is operating during an emergency and it is not possible to shut down the engine in order to perform the work practice requirements on the schedule required in Table 2c of this subpart, or if performing the work practice on the required schedule would otherwise pose an unacceptable risk under federal, state, or local law, the work practice can be delayed until the emergency is over or the unacceptable risk under federal, state, or local law has abated. The work practice should be performed as soon as practicable after the emergency has ended or the unacceptable risk under federal, state, or local law has abated. Sources must report any failure to perform the work practice on the schedule required and the federal, state or local law under which the risk was deemed unacceptable.

[2]Sources have the option to utilize an oil analysis program as described in §63.6625(i) or (j) in order to extend the specified oil change requirement in Table 2c of this subpart.

[3]Sources can petition the Administrator pursuant to the requirements of 40 CFR 63.6(g) for alternative work practices.

[78 FR 6708, Jan. 30, 2013, as amended at 78 FR 14457, Mar. 6, 2013]

Table 2d to Subpart ZZZZ of Part 63—Requirements for Existing Stationary RICE Located at Area Sources of HAP Emissions

As stated in §§63.6603 and 63.6640, you must comply with the following requirements for existing stationary RICE located at area sources of HAP emissions:

For each . . .	**You must meet the following requirement, except during periods of startup . . .**	**During periods of startup you must . . .**
1. Non-Emergency, non-black start CI stationary RICE ≤300 HP	a. Change oil and filter every 1,000 hours of operation or annually, whichever comes first;[1] b. Inspect air cleaner every 1,000 hours of operation or annually, whichever comes first, and replace as necessary; c. Inspect all hoses and belts every 500 hours of operation or annually, whichever comes first, and replace as necessary.	Minimize the engine's time spent at idle and minimize the engine's startup time at startup to a period needed for appropriate and safe loading of the engine, not to exceed 30 minutes, after which time the non-startup emission limitations apply.
2. Non-Emergency, non-black start CI stationary RICE 300<HP≤500	a. Limit concentration of CO in the stationary RICE exhaust to 49 ppmvd at 15 percent O_2; or	
	b. Reduce CO emissions by 70 percent or more.	
3. Non-Emergency, non-black start CI stationary RICE >500 HP	a. Limit concentration of CO in the stationary RICE exhaust to 23 ppmvd at 15 percent O_2; or	

	b. Reduce CO emissions by 70 percent or more.	
4. Emergency stationary CI RICE and black start stationary CI RICE.[2]	a. Change oil and filter every 500 hours of operation or annually, whichever comes first;[1]	
	b. Inspect air cleaner every 1,000 hours of operation or annually, whichever comes first, and replace as necessary; and	
	c. Inspect all hoses and belts every 500 hours of operation or annually, whichever comes first, and replace as necessary.	
5. Emergency stationary SI RICE; black start stationary SI RICE; non-emergency, non-black start 4SLB stationary RICE >500 HP that operate 24 hours or less per calendar year; non-emergency, non-black start 4SRB stationary RICE >500 HP that operate 24 hours or less per calendar year.[2]	a. Change oil and filter every 500 hours of operation or annually, whichever comes first;[1]; b. Inspect spark plugs every 1,000 hours of operation or annually, whichever comes first, and replace as necessary; and c. Inspect all hoses and belts every 500 hours of operation or annually, whichever comes first, and replace as necessary.	
6. Non-emergency, non-black start 2SLB stationary RICE	a. Change oil and filter every 4,320 hours of operation or annually, whichever comes first;[1]	
	b. Inspect spark plugs every 4,320 hours of operation or annually,	

	whichever comes first, and replace as necessary; and	
	c. Inspect all hoses and belts every 4,320 hours of operation or annually, whichever comes first, and replace as necessary.	
7. Non-emergency, non-black start 4SLB stationary RICE ≤500 HP	a. Change oil and filter every 1,440 hours of operation or annually, whichever comes first;[1]	
	b. Inspect spark plugs every 1,440 hours of operation or annually, whichever comes first, and replace as necessary; and	
	c. Inspect all hoses and belts every 1,440 hours of operation or annually, whichever comes first, and replace as necessary.	
8. Non-emergency, non-black start 4SLB remote stationary RICE >500 HP	a. Change oil and filter every 2,160 hours of operation or annually, whichever comes first;[1]	
	b. Inspect spark plugs every 2,160 hours of operation or annually, whichever comes first, and replace as necessary; and	
	c. Inspect all hoses and belts every 2,160 hours of operation or annually, whichever comes first, and replace as necessary.	

9. Non-emergency, non-black start 4SLB stationary RICE >500 HP that are not remote stationary RICE and that operate more than 24 hours per calendar year	Install an oxidation catalyst to reduce HAP emissions from the stationary RICE.	
10. Non-emergency, non-black start 4SRB stationary RICE ≤500 HP	a. Change oil and filter every 1,440 hours of operation or annually, whichever comes first;[1]	
	b. Inspect spark plugs every 1,440 hours of operation or annually, whichever comes first, and replace as necessary; and	
	c. Inspect all hoses and belts every 1,440 hours of operation or annually, whichever comes first, and replace as necessary.	
11. Non-emergency, non-black start 4SRB remote stationary RICE >500 HP	a. Change oil and filter every 2,160 hours of operation or annually, whichever comes first;[1]	
	b. Inspect spark plugs every 2,160 hours of operation or annually, whichever comes first, and replace as necessary; and	
	c. Inspect all hoses and belts every 2,160 hours of operation or annually, whichever comes first, and replace as necessary.	
12. Non-emergency, non-black start 4SRB stationary RICE >500 HP that are not remote stationary RICE and that operate more than 24 hours per calendar year	Install NSCR to reduce HAP emissions from the stationary RICE.	

13. Non-emergency, non-black start stationary RICE which combusts landfill or digester gas equivalent to 10 percent or more of the gross heat input on an annual basis	a. Change oil and filter every 1,440 hours of operation or annually, whichever comes first;[1] b. Inspect spark plugs every 1,440 hours of operation or annually, whichever comes first, and replace as necessary; and	
	c. Inspect all hoses and belts every 1,440 hours of operation or annually, whichever comes first, and replace as necessary.	

[1]Sources have the option to utilize an oil analysis program as described in §63.6625(i) or (j) in order to extend the specified oil change requirement in Table 2d of this subpart.

[2]If an emergency engine is operating during an emergency and it is not possible to shut down the engine in order to perform the management practice requirements on the schedule required in Table 2d of this subpart, or if performing the management practice on the required schedule would otherwise pose an unacceptable risk under federal, state, or local law, the management practice can be delayed until the emergency is over or the unacceptable risk under federal, state, or local law has abated. The management practice should be performed as soon as practicable after the emergency has ended or the unacceptable risk under federal, state, or local law has abated. Sources must report any failure to perform the management practice on the schedule required and the federal, state or local law under which the risk was deemed unacceptable.

[78 FR 6709, Jan. 30, 2013]

Table 3 to Subpart ZZZZ of Part 63—Subsequent Performance Tests

As stated in §§63.6615 and 63.6620, you must comply with the following subsequent performance test requirements:

For each . . .	**Complying with the requirement to . . .**	**You must . . .**
1. New or reconstructed 2SLB stationary RICE >500 HP located at major sources; new or reconstructed 4SLB stationary RICE ≥250 HP located at major sources; and new or	Reduce CO emissions and not using a CEMS	Conduct subsequent performance tests semiannually.[1]

reconstructed CI stationary RICE >500 HP located at major sources		
2. 4SRB stationary RICE ≥5,000 HP located at major sources	Reduce formaldehyde emissions	Conduct subsequent performance tests semiannually.[1]
3. Stationary RICE >500 HP located at major sources and new or reconstructed 4SLB stationary RICE 250≤HP≤500 located at major sources	Limit the concentration of formaldehyde in the stationary RICE exhaust	Conduct subsequent performance tests semiannually.[1]
4. Existing non-emergency, non-black start CI stationary RICE >500 HP that are not limited use stationary RICE	Limit or reduce CO emissions and not using a CEMS	Conduct subsequent performance tests every 8,760 hours or 3 years, whichever comes first.
5. Existing non-emergency, non-black start CI stationary RICE >500 HP that are limited use stationary RICE	Limit or reduce CO emissions and not using a CEMS	Conduct subsequent performance tests every 8,760 hours or 5 years, whichever comes first.

[1]After you have demonstrated compliance for two consecutive tests, you may reduce the frequency of subsequent performance tests to annually. If the results of any subsequent annual performance test indicate the stationary RICE is not in compliance with the CO or formaldehyde emission limitation, or you deviate from any of your operating limitations, you must resume semiannual performance tests.

[78 FR 6711, Jan. 30, 2013]

Table 4 to Subpart ZZZZ of Part 63—Requirements for Performance Tests

As stated in §§63.6610, 63.6611, 63.6620, and 63.6640, you must comply with the following requirements for performance tests for stationary RICE:

For each . . .	**Complying with the requirement to . . .**	**You must . . .**	**Using . . .**	**According to the following requirements . . .**
1. 2SLB, 4SLB, and CI stationary RICE	a. reduce CO emissions	i. Select the sampling port location and the number/location of traverse points at the inlet and outlet of the control device; and		(a) For CO and O_2 measurement, ducts ≤6 inches in diameter may be sampled at a single point located at the duct centroid and ducts >6 and ≤12 inches in diameter

				may be sampled at 3 traverse points located at 16.7, 50.0, and 83.3% of the measurement line (`3-point long line'). If the duct is >12 inches in diameter *and* the sampling port location meets the two and half-diameter criterion of Section 11.1.1 of Method 1 of 40 CFR part 60, appendix A-1, the duct may be sampled at `3-point long line'; otherwise, conduct the stratification testing and select sampling points according to Section 8.1.2 of Method 7E of 40 CFR part 60, appendix A-4.
		ii. Measure the O_2 at the inlet and outlet of the control device; and	(1) Method 3 or 3A or 3B of 40 CFR part 60, appendix A-2, or ASTM Method D6522-00 (Reapproved 2005)[ac] (heated probe not necessary)	(b) Measurements to determine O_2 must be made at the same time as the measurements for CO concentration.
		iii. Measure the CO at the inlet and the outlet of the control device	(1) ASTM D6522-00 (Reapproved 2005)[abc] (heated probe not necessary) or Method 10 of 40 CFR part 60, appendix A-4	(c) The CO concentration must be at 15 percent O_2, dry basis.
2. 4SRB stationary RICE	a. reduce formaldehyde emissions	i. Select the sampling port location and the number/location of traverse points at the		(a) For formaldehyde, O_2, and moisture measurement, ducts ≤6 inches in diameter may be sampled at a single

		inlet and outlet of the control device; and		point located at the duct centroid and ducts >6 and ≤12 inches in diameter may be sampled at 3 traverse points located at 16.7, 50.0, and 83.3% of the measurement line (`3-point long line'). If the duct is >12 inches in diameter *and* the sampling port location meets the two and half-diameter criterion of Section 11.1.1 of Method 1 of 40 CFR part 60, appendix A, the duct may be sampled at `3-point long line'; otherwise, conduct the stratification testing and select sampling points according to Section 8.1.2 of Method 7E of 40 CFR part 60, appendix A.
		ii. Measure O_2 at the inlet and outlet of the control device; and	(1) Method 3 or 3A or 3B of 40 CFR part 60, appendix A-2, or ASTM Method D6522-00 (Reapproved 2005)[a] (heated probe not necessary)	(a) Measurements to determine O_2 concentration must be made at the same time as the measurements for formaldehyde or THC concentration.
		iii. Measure moisture content at the inlet and outlet of the control device; and	(1) Method 4 of 40 CFR part 60, appendix A-3, or Method 320 of 40 CFR part 63, appendix A, or ASTM D 6348-03[a]	(a) Measurements to determine moisture content must be made at the same time and location as the measurements for formaldehyde or THC concentration.
		iv. If demonstrating compliance with the formaldehyde percent reduction	(1) Method 320 or 323 of 40 CFR part 63, appendix A; or ASTM D6348-03[a],	(a) Formaldehyde concentration must be at 15 percent O_2, dry basis. Results of this test

		requirement, measure formalde-hyde at the inlet and the outlet of the control device	provided in ASTM D6348-03 Annex A5 (Analyte Spiking Technique), the percent R must be greater than or equal to 70 and less than or equal to 130	consist of the average of the three 1-hour or longer runs.
		v. If demonstrating compliance with the THC percent reduction requirement, measure THC at the inlet and the outlet of the control device	(1) Method 25A, reported as propane, of 40 CFR part 60, appendix A-7	(a) THC concentration must be at 15 percent O_2, dry basis. Results of this test consist of the average of the three 1-hour or longer runs.
3. Stationary RICE	a. limit the concentra-tion of formalde-hyde or CO in the stationary RICE exhaust	i. Select the sampling port location and the number/location of traverse points at the exhaust of the stationary RICE; and		(a) For formaldehyde, CO, O_2, and moisture measurement, ducts ≤6 inches in diameter may be sampled at a single point located at the duct centroid and ducts >6 and ≤12 inches in diameter may be sampled at 3 traverse points located at 16.7, 50.0, and 83.3% of the measurement line (`3-point long line'). If the duct is >12 inches in diameter *and* the sampling port location meets the two and half-diameter criterion of Section 11.1.1 of Method 1 of 40 CFR part 60, appendix A, the duct may be sampled at `3-point long line'; otherwise, conduct the stratification testing and select sampling points according to Section 8.1.2 of Method 7E of 40 CFR part 60, appendix A.

				If using a control device, the sampling site must be located at the outlet of the control device.
		ii. Determine the O_2 concentration of the stationary RICE exhaust at the sampling port location; and	(1) Method 3 or 3A or 3B of 40 CFR part 60, appendix A-2, or ASTM Method D6522-00 (Reapproved 2005)[a] (heated probe not necessary)	(a) Measurements to determine O_2 concentration must be made at the same time and location as the measurements for formaldehyde or CO concentration.
		iii. Measure moisture content of the station-ary RICE exhaust at the sampling port location; and	(1) Method 4 of 40 CFR part 60, appendix A-3, or Method 320 of 40 CFR part 63, appendix A, or ASTM D 6348-03[a]	(a) Measurements to determine moisture content must be made at the same time and location as the measurements for formaldehyde or CO concentration.
		iv. Measure formalde-hyde at the exhaust of the station-ary RICE; or	(1) Method 320 or 323 of 40 CFR part 63, appendix A; or ASTM D6348-03[a], provided in ASTM D6348-03 Annex A5 (Analyte Spiking Technique), the percent R must be greater than or equal to 70 and less than or equal to 130	(a) Formaldehyde concentration must be at 15 percent O_2, dry basis. Results of this test consist of the average of the three 1-hour or longer runs.
		v. measure CO at the exhaust of the station-ary RICE	(1) Method 10 of 40 CFR part 60, appendix A-4, ASTM Method D6522-00 (2005)[ac], Method 320 of 40 CFR part 63, appendix A, or ASTM D6348-03[a]	(a) CO concentration must be at 15 percent O_2, dry basis. Results of this test consist of the average of the three 1-hour or longer runs.

[a]You may also use Methods 3A and 10 as options to ASTM-D6522-00 (2005). You may obtain a copy of ASTM-D6522-00 (2005) from at least one of the following addresses: American

Society for Testing and Materials, 100 Barr Harbor Drive, West Conshohocken, PA 19428-2959, or University Microfilms International, 300 North Zeeb Road, Ann Arbor, MI 48106.

[b]You may obtain a copy of ASTM-D6348-03 from at least one of the following addresses: American Society for Testing and Materials, 100 Barr Harbor Drive, West Conshohocken, PA 19428-2959, or University Microfilms International, 300 North Zeeb Road, Ann Arbor, MI 48106.

[79 FR 11290, Feb. 27, 2014]

Table 5 to Subpart ZZZZ of Part 63—Initial Compliance With Emission Limitations, Operating Limitations, and Other Requirements

As stated in §§63.6612, 63.6625 and 63.6630, you must initially comply with the emission and operating limitations as required by the following:

For each . . .	**Complying with the requirement to . . .**	**You have demonstrated initial compliance if . . .**
1. New or reconstructed non-emergency 2SLB stationary RICE >500 HP located at a major source of HAP, new or reconstructed non-emergency 4SLB stationary RICE ≥250 HP located at a major source of HAP, non-emergency stationary CI RICE >500 HP located at a major source of HAP, and existing non-emergency stationary CI RICE >500 HP located at an area source of HAP	a. Reduce CO emissions and using oxidation catalyst, and using a CPMS	i. The average reduction of emissions of CO determined from the initial performance test achieves the required CO percent reduction; and ii. You have installed a CPMS to continuously monitor catalyst inlet temperature according to the requirements in §63.6625(b); and iii. You have recorded the catalyst pressure drop and catalyst inlet temperature during the initial performance test.
2. Non-emergency stationary CI RICE >500 HP located at a major source of HAP, and existing non-emergency stationary CI RICE >500 HP located at an area source of HAP	a. Limit the concentration of CO, using oxidation catalyst, and using a CPMS	i. The average CO concentration determined from the initial performance test is less than or equal to the CO emission limitation; and
		ii. You have installed a CPMS to continuously monitor catalyst inlet temperature according to the requirements in §63.6625(b); and
		iii. You have recorded the catalyst pressure drop and catalyst inlet temperature during the initial performance test.

3. New or reconstructed non-emergency 2SLB stationary RICE >500 HP located at a major source of HAP, new or reconstructed non-emergency 4SLB stationary RICE ≥250 HP located at a major source of HAP, non-emergency stationary CI RICE >500 HP located at a major source of HAP, and existing non-emergency stationary CI RICE >500 HP located at an area source of HAP	a. Reduce CO emissions and not using oxidation catalyst	i. The average reduction of emissions of CO determined from the initial performance test achieves the required CO percent reduction; and ii. You have installed a CPMS to continuously monitor operating parameters approved by the Administrator (if any) according to the requirements in §63.6625(b); and iii. You have recorded the approved operating parameters (if any) during the initial performance test.
4. Non-emergency stationary CI RICE >500 HP located at a major source of HAP, and existing non-emergency stationary CI RICE >500 HP located at an area source of HAP	a. Limit the concentration of CO, and not using oxidation catalyst	i. The average CO concentration determined from the initial performance test is less than or equal to the CO emission limitation; and ii. You have installed a CPMS to continuously monitor operating parameters approved by the Administrator (if any) according to the requirements in §63.6625(b); and
		iii. You have recorded the approved operating parameters (if any) during the initial performance test.
5. New or reconstructed non-emergency 2SLB stationary RICE >500 HP located at a major source of HAP, new or reconstructed non-emergency 4SLB stationary RICE ≥250 HP located at a major source of HAP, non-emergency stationary CI RICE >500 HP located at a major source of HAP, and existing non-emergency stationary CI RICE >500 HP located at an area source of HAP	a. Reduce CO emissions, and using a CEMS	i. You have installed a CEMS to continuously monitor CO and either O_2 or CO_2 at both the inlet and outlet of the oxidation catalyst according to the requirements in §63.6625(a); and ii. You have conducted a performance evaluation of your CEMS using PS 3 and 4A of 40 CFR part 60, appendix B; and
		iii. The average reduction of CO calculated using §63.6620 equals or exceeds the required percent reduction. The initial test comprises the first 4-hour period after successful validation of the CEMS. Compliance is based on the average

		percent reduction achieved during the 4-hour period.
6. Non-emergency stationary CI RICE >500 HP located at a major source of HAP, and existing non-emergency stationary CI RICE >500 HP located at an area source of HAP	a. Limit the concentration of CO, and using a CEMS	i. You have installed a CEMS to continuously monitor CO and either O_2 or CO_2 at the outlet of the oxidation catalyst according to the requirements in §63.6625(a); and
		ii. You have conducted a performance evaluation of your CEMS using PS 3 and 4A of 40 CFR part 60, appendix B; and
		iii. The average concentration of CO calculated using §63.6620 is less than or equal to the CO emission limitation. The initial test comprises the first 4-hour period after successful validation of the CEMS. Compliance is based on the average concentration measured during the 4-hour period.
7. Non-emergency 4SRB stationary RICE >500 HP located at a major source of HAP	a. Reduce formaldehyde emissions and using NSCR	i. The average reduction of emissions of formaldehyde determined from the initial performance test is equal to or greater than the required formaldehyde percent reduction, or the average reduction of emissions of THC determined from the initial performance test is equal to or greater than 30 percent; and
		ii. You have installed a CPMS to continuously monitor catalyst inlet temperature according to the requirements in §63.6625(b); and
		iii. You have recorded the catalyst pressure drop and catalyst inlet temperature during the initial performance test.
8. Non-emergency 4SRB stationary RICE >500 HP located at a major source of HAP	a. Reduce formaldehyde emissions and not using NSCR	i. The average reduction of emissions of formaldehyde determined from the initial performance test is equal to or

		greater than the required formaldehyde percent reduction or the average reduction of emissions of THC determined from the initial performance test is equal to or greater than 30 percent; and
		ii. You have installed a CPMS to continuously monitor operating parameters approved by the Administrator (if any) according to the requirements in §63.6625(b); and
		iii. You have recorded the approved operating parameters (if any) during the initial performance test.
9. New or reconstructed non-emergency stationary RICE >500 HP located at a major source of HAP, new or reconstructed non-emergency 4SLB stationary RICE 250≤HP≤500 located at a major source of HAP, and existing non-emergency 4SRB stationary RICE >500 HP located at a major source of HAP	a. Limit the concentration of formaldehyde in the stationary RICE exhaust and using oxidation catalyst or NSCR	i. The average formaldehyde concentration, corrected to 15 percent O_2, dry basis, from the three test runs is less than or equal to the formaldehyde emission limitation; and ii. You have installed a CPMS to continuously monitor catalyst inlet temperature according to the requirements in §63.6625(b); and
		iii. You have recorded the catalyst pressure drop and catalyst inlet temperature during the initial performance test.
10. New or reconstructed non-emergency stationary RICE >500 HP located at a major source of HAP, new or reconstructed non-emergency 4SLB stationary RICE 250≤HP≤500 located at a major source of HAP, and existing non-emergency 4SRB stationary RICE >500 HP located at a major source of HAP	a. Limit the concentration of formaldehyde in the stationary RICE exhaust and not using oxidation catalyst or NSCR	i. The average formaldehyde concentration, corrected to 15 percent O_2, dry basis, from the three test runs is less than or equal to the formaldehyde emission limitation; and ii. You have installed a CPMS to continuously monitor operating parameters approved by the Administrator (if any) according to the requirements in §63.6625(b); and
		iii. You have recorded the approved operating parameters (if any) during the initial performance test.

11. Existing non-emergency stationary RICE 100≤HP≤500 located at a major source of HAP, and existing non-emergency stationary CI RICE 300<HP≤500 located at an area source of HAP	a. Reduce CO emissions	i. The average reduction of emissions of CO or formaldehyde, as applicable determined from the initial performance test is equal to or greater than the required CO or formaldehyde, as applicable, percent reduction.
12. Existing non-emergency stationary RICE 100≤HP≤500 located at a major source of HAP, and existing non-emergency stationary CI RICE 300<HP≤500 located at an area source of HAP	a. Limit the concentration of formaldehyde or CO in the stationary RICE exhaust	i. The average formaldehyde or CO concentration, as applicable, corrected to 15 percent O_2, dry basis, from the three test runs is less than or equal to the formaldehyde or CO emission limitation, as applicable.
13. Existing non-emergency 4SLB stationary RICE >500 HP located at an area source of HAP that are not remote stationary RICE and that are operated more than 24 hours per calendar year	a. Install an oxidation catalyst	i. You have conducted an initial compliance demonstration as specified in §63.6630(e) to show that the average reduction of emissions of CO is 93 percent or more, or the average CO concentration is less than or equal to 47 ppmvd at 15 percent O_2;
		ii. You have installed a CPMS to continuously monitor catalyst inlet temperature according to the requirements in §63.6625(b), or you have installed equipment to automatically shut down the engine if the catalyst inlet temperature exceeds 1350 °F.
14. Existing non-emergency 4SRB stationary RICE >500 HP located at an area source of HAP that are not remote stationary RICE and that are operated more than 24 hours per calendar year	a. Install NSCR	i. You have conducted an initial compliance demonstration as specified in §63.6630(e) to show that the average reduction of emissions of CO is 75 percent or more, the average CO concentration is less than or equal to 270 ppmvd at 15 percent O_2, or the average reduction of emissions of THC is 30 percent or more;
		ii. You have installed a CPMS to continuously monitor catalyst inlet temperature according to the requirements in §63.6625(b), or you

		have installed equipment to automatically shut down the engine if the catalyst inlet temperature exceeds 1250 °F.

[78 FR 6712, Jan. 30, 2013]

Table 6 to Subpart ZZZZ of Part 63—Continuous Compliance With Emission Limitations, and Other Requirements

As stated in §63.6640, you must continuously comply with the emissions and operating limitations and work or management practices as required by the following:

For each . . .	Complying with the requirement to . . .	You must demonstrate continuous compliance by . . .
1. New or reconstructed non-emergency 2SLB stationary RICE >500 HP located at a major source of HAP, new or reconstructed non-emergency 4SLB stationary RICE ≥250 HP located at a major source of HAP, and new or reconstructed non-emergency CI stationary RICE >500 HP located at a major source of HAP	a. Reduce CO emissions and using an oxidation catalyst, and using a CPMS	i. Conducting semiannual performance tests for CO to demonstrate that the required CO percent reduction is achieved[a]; and ii. Collecting the catalyst inlet temperature data according to §63.6625(b); and iii. Reducing these data to 4-hour rolling averages; and
		iv. Maintaining the 4-hour rolling averages within the operating limitations for the catalyst inlet temperature; and
		v. Measuring the pressure drop across the catalyst once per month and demonstrating that the pressure drop across the catalyst is within the operating limitation established during the performance test.
2. New or reconstructed non-emergency 2SLB stationary RICE >500 HP located at a major source of HAP, new or reconstructed non-emergency 4SLB stationary RICE ≥250 HP located at a major source of HAP, and new or reconstructed non-emergency CI stationary RICE	a. Reduce CO emissions and not using an oxidation catalyst, and using a CPMS	i. Conducting semiannual performance tests for CO to demonstrate that the required CO percent reduction is achieved[a]; and ii. Collecting the approved operating parameter (if any) data according to §63.6625(b); and iii. Reducing these data to 4-hour rolling averages; and

>500 HP located at a major source of HAP		
		iv. Maintaining the 4-hour rolling averages within the operating limitations for the operating parameters established during the performance test.
3. New or reconstructed non-emergency 2SLB stationary RICE >500 HP located at a major source of HAP, new or reconstructed non-emergency 4SLB stationary RICE ≥250 HP located at a major source of HAP, new or reconstructed non-emergency stationary CI RICE >500 HP located at a major source of HAP, and existing non-emergency stationary CI RICE >500 HP	a. Reduce CO emissions or limit the concentration of CO in the stationary RICE exhaust, and using a CEMS	i. Collecting the monitoring data according to §63.6625(a), reducing the measurements to 1-hour averages, calculating the percent reduction or concentration of CO emissions according to §63.6620; and ii. Demonstrating that the catalyst achieves the required percent reduction of CO emissions over the 4-hour averaging period, or that the emission remain at or below the CO concentration limit; and
		iii. Conducting an annual RATA of your CEMS using PS 3 and 4A of 40 CFR part 60, appendix B, as well as daily and periodic data quality checks in accordance with 40 CFR part 60, appendix F, procedure 1.
4. Non-emergency 4SRB stationary RICE >500 HP located at a major source of HAP	a. Reduce formaldehyde emissions and using NSCR	i. Collecting the catalyst inlet temperature data according to §63.6625(b); and
		ii. Reducing these data to 4-hour rolling averages; and
		iii. Maintaining the 4-hour rolling averages within the operating limitations for the catalyst inlet temperature; and
		iv. Measuring the pressure drop across the catalyst once per month and demonstrating that the pressure drop across the catalyst is within the operating limitation established during the performance test.

5. Non-emergency 4SRB stationary RICE >500 HP located at a major source of HAP	a. Reduce formaldehyde emissions and not using NSCR	i. Collecting the approved operating parameter (if any) data according to §63.6625(b); and
		ii. Reducing these data to 4-hour rolling averages; and
		iii. Maintaining the 4-hour rolling averages within the operating limitations for the operating parameters established during the performance test.
6. Non-emergency 4SRB stationary RICE with a brake HP ≥5,000 located at a major source of HAP	a. Reduce formaldehyde emissions	Conducting semiannual performance tests for formaldehyde to demonstrate that the required formaldehyde percent reduction is achieved, or to demonstrate that the average reduction of emissions of THC determined from the performance test is equal to or greater than 30 percent.[a]
7. New or reconstructed non-emergency stationary RICE >500 HP located at a major source of HAP and new or reconstructed non-emergency 4SLB stationary RICE 250≤HP≤500 located at a major source of HAP	a. Limit the concentration of formaldehyde in the stationary RICE exhaust and using oxidation catalyst or NSCR	i. Conducting semiannual performance tests for formaldehyde to demonstrate that your emissions remain at or below the formaldehyde concentration limit[a]; and ii. Collecting the catalyst inlet temperature data according to §63.6625(b); and
		iii. Reducing these data to 4-hour rolling averages; and
		iv. Maintaining the 4-hour rolling averages within the operating limitations for the catalyst inlet temperature; and
		v. Measuring the pressure drop across the catalyst once per month and demonstrating that the pressure drop across the catalyst is within the operating limitation established during the performance test.
8. New or reconstructed non-emergency stationary RICE >500	a. Limit the concentration of	i. Conducting semiannual performance tests for formaldehyde

HP located at a major source of HAP and new or reconstructed non-emergency 4SLB stationary RICE 250≤HP≤500 located at a major source of HAP	formaldehyde in the stationary RICE exhaust and not using oxidation catalyst or NSCR	to demonstrate that your emissions remain at or below the formaldehyde concentration limit[a]; and ii. Collecting the approved operating parameter (if any) data according to §63.6625(b); and
		iii. Reducing these data to 4-hour rolling averages; and
		iv. Maintaining the 4-hour rolling averages within the operating limitations for the operating parameters established during the performance test.
9. Existing emergency and black start stationary RICE ≤500 HP located at a major source of HAP, existing non-emergency stationary RICE <100 HP located at a major source of HAP, existing emergency and black start stationary RICE located at an area source of HAP, existing non-emergency stationary CI RICE ≤300 HP located at an area source of HAP, existing non-emergency 2SLB stationary RICE located at an area source of HAP, existing non-emergency stationary SI RICE located at an area source of HAP which combusts landfill or digester gas equivalent to 10 percent or more of the gross heat input on an annual basis, existing non-emergency 4SLB and 4SRB stationary RICE ≤500 HP located at an area source of HAP, existing non-emergency 4SLB and 4SRB stationary RICE >500 HP located at an area source of HAP that operate 24 hours or less per calendar year, and existing non-emergency 4SLB and 4SRB stationary RICE >500 HP located at an area source of HAP that are remote stationary RICE	a. Work or Management practices	i. Operating and maintaining the stationary RICE according to the manufacturer's emission-related operation and maintenance instructions; or ii. Develop and follow your own maintenance plan which must provide to the extent practicable for the maintenance and operation of the engine in a manner consistent with good air pollution control practice for minimizing emissions.

10. Existing stationary CI RICE >500 HP that are not limited use stationary RICE	a. Reduce CO emissions, or limit the concentration of CO in the stationary RICE exhaust, and using oxidation catalyst	i. Conducting performance tests every 8,760 hours or 3 years, whichever comes first, for CO or formaldehyde, as appropriate, to demonstrate that the required CO or formaldehyde, as appropriate, percent reduction is achieved or that your emissions remain at or below the CO or formaldehyde concentration limit; and
		ii. Collecting the catalyst inlet temperature data according to §63.6625(b); and
		iii. Reducing these data to 4-hour rolling averages; and
		iv. Maintaining the 4-hour rolling averages within the operating limitations for the catalyst inlet temperature; and
		v. Measuring the pressure drop across the catalyst once per month and demonstrating that the pressure drop across the catalyst is within the operating limitation established during the performance test.
11. Existing stationary CI RICE >500 HP that are not limited use stationary RICE	a. Reduce CO emissions, or limit the concentration of CO in the stationary RICE exhaust, and not using oxidation catalyst	i. Conducting performance tests every 8,760 hours or 3 years, whichever comes first, for CO or formaldehyde, as appropriate, to demonstrate that the required CO or formaldehyde, as appropriate, percent reduction is achieved or that your emissions remain at or below the CO or formaldehyde concentration limit; and
		ii. Collecting the approved operating parameter (if any) data according to §63.6625(b); and
		iii. Reducing these data to 4-hour rolling averages; and
		iv. Maintaining the 4-hour rolling averages within the operating

		limitations for the operating parameters established during the performance test.
12. Existing limited use CI stationary RICE >500 HP	a. Reduce CO emissions or limit the concentration of CO in the stationary RICE exhaust, and using an oxidation catalyst	i. Conducting performance tests every 8,760 hours or 5 years, whichever comes first, for CO or formaldehyde, as appropriate, to demonstrate that the required CO or formaldehyde, as appropriate, percent reduction is achieved or that your emissions remain at or below the CO or formaldehyde concentration limit; and
		ii. Collecting the catalyst inlet temperature data according to §63.6625(b); and
		iii. Reducing these data to 4-hour rolling averages; and
		iv. Maintaining the 4-hour rolling averages within the operating limitations for the catalyst inlet temperature; and
		v. Measuring the pressure drop across the catalyst once per month and demonstrating that the pressure drop across the catalyst is within the operating limitation established during the performance test.
13. Existing limited use CI stationary RICE >500 HP	a. Reduce CO emissions or limit the concentration of CO in the stationary RICE exhaust, and not using an oxidation catalyst	i. Conducting performance tests every 8,760 hours or 5 years, whichever comes first, for CO or formaldehyde, as appropriate, to demonstrate that the required CO or formaldehyde, as appropriate, percent reduction is achieved or that your emissions remain at or below the CO or formaldehyde concentration limit; and
		ii. Collecting the approved operating parameter (if any) data according to §63.6625(b); and

		iii. Reducing these data to 4-hour rolling averages; and
		iv. Maintaining the 4-hour rolling averages within the operating limitations for the operating parameters established during the performance test.
14. Existing non-emergency 4SLB stationary RICE >500 HP located at an area source of HAP that are not remote stationary RICE and that are operated more than 24 hours per calendar year	a. Install an oxidation catalyst	i. Conducting annual compliance demonstrations as specified in §63.6640(c) to show that the average reduction of emissions of CO is 93 percent or more, or the average CO concentration is less than or equal to 47 ppmvd at 15 percent O_2; and either ii. Collecting the catalyst inlet temperature data according to §63.6625(b), reducing these data to 4-hour rolling averages; and maintaining the 4-hour rolling averages within the limitation of greater than 450 °F and less than or equal to 1350 °F for the catalyst inlet temperature; or iii. Immediately shutting down the engine if the catalyst inlet temperature exceeds 1350 °F.
15. Existing non-emergency 4SRB stationary RICE >500 HP located at an area source of HAP that are not remote stationary RICE and that are operated more than 24 hours per calendar year	a. Install NSCR	i. Conducting annual compliance demonstrations as specified in §63.6640(c) to show that the average reduction of emissions of CO is 75 percent or more, the average CO concentration is less than or equal to 270 ppmvd at 15 percent O_2, or the average reduction of emissions of THC is 30 percent or more; and either ii. Collecting the catalyst inlet temperature data according to §63.6625(b), reducing these data to 4-hour rolling averages; and maintaining the 4-hour rolling averages within the limitation of greater than or equal to 750 °F and

		less than or equal to 1250 °F for the catalyst inlet temperature; or iii. Immediately shutting down the engine if the catalyst inlet temperature exceeds 1250 °F.

[a]After you have demonstrated compliance for two consecutive tests, you may reduce the frequency of subsequent performance tests to annually. If the results of any subsequent annual performance test indicate the stationary RICE is not in compliance with the CO or formaldehyde emission limitation, or you deviate from any of your operating limitations, you must resume semiannual performance tests.

[78 FR 6715, Jan. 30, 2013]

Table 7 to Subpart ZZZZ of Part 63—Requirements for Reports

As stated in §63.6650, you must comply with the following requirements for reports:

For each . . .	**You must submit a . . .**	**The report must contain . . .**	**You must submit the report . . .**
1. Existing non-emergency, non-black start stationary RICE 100≤HP≤500 located at a major source of HAP; existing non-emergency, non-black start stationary CI RICE >500 HP located at a major source of HAP; existing non-emergency 4SRB stationary RICE >500 HP located at a major source of HAP; existing non-emergency, non-black start stationary CI RICE >300 HP located at an area source of HAP; new or reconstructed non-emergency stationary RICE >500 HP located at a major source of HAP; and new or reconstructed non-emergency 4SLB stationary RICE 250≤HP≤500 located at a major source of HAP	Compliance report	a. If there are no deviations from any emission limitations or operating limitations that apply to you, a statement that there were no deviations from the emission limitations or operating limitations during the reporting period. If there were no periods during which the CMS, including CEMS and CPMS, was out-of-control, as specified in §63.8(c)(7), a statement that there were not periods during which the CMS was out-of-control during the reporting period; or	i. Semiannually according to the requirements in §63.6650(b)(1)-(5) for engines that are not limited use stationary RICE subject to numerical emission limitations; and ii. Annually according to the requirements in §63.6650(b)(6)-(9) for engines that are limited use stationary RICE subject to numerical emission limitations.

		b. If you had a deviation from any emission limitation or operating limitation during the reporting period, the information in §63.6650(d). If there were periods during which the CMS, including CEMS and CPMS, was out-of-control, as specified in §63.8(c)(7), the information in §63.6650(e); or	i. Semiannually according to the requirements in §63.6650(b).
		c. If you had a malfunction during the reporting period, the information in §63.6650(c)(4).	i. Semiannually according to the requirements in §63.6650(b).
2. New or reconstructed non-emergency stationary RICE that combusts landfill gas or digester gas equivalent to 10 percent or more of the gross heat input on an annual basis	Report	a. The fuel flow rate of each fuel and the heating values that were used in your calculations, and you must demonstrate that the percentage of heat input provided by landfill gas or digester gas, is equivalent to 10 percent or more of the gross heat input on an annual basis; and	i. Annually, according to the requirements in §63.6650.
		b. The operating limits provided in your federally enforceable permit, and any deviations from these limits; and	i. See item 2.a.i.
		c. Any problems or errors suspected with the meters.	i. See item 2.a.i.
3. Existing non-emergency, non-black start 4SLB and 4SRB stationary RICE >500 HP located at an area source of HAP that are not remote stationary RICE and that operate more than 24 hours per calendar year	Compliance report	a. The results of the annual compliance demonstration, if conducted during the reporting period.	i. Semiannually according to the requirements in §63.6650(b)(1)-(5).

4. Emergency stationary RICE that operate or are contractually obligated to be available for more than 15 hours per year for the purposes specified in §63.6640(f)(2)(ii) and (iii) or that operate for the purposes specified in §63.6640(f)(4)(ii)	Report	a. The information in §63.6650(h)(1)	i. annually according to the requirements in §63.6650(h)(2)-(3).

[78 FR 6719, Jan. 30, 2013]

Table 8 to Subpart ZZZZ of Part 63—Applicability of General Provisions to Subpart ZZZZ.

As stated in §63.6665, you must comply with the following applicable general provisions.

General provisions citation	Subject of citation	Applies to subpart	Explanation
§63.1	General applicability of the General Provisions	Yes.	
§63.2	Definitions	Yes	Additional terms defined in §63.6675.
§63.3	Units and abbreviations	Yes.	
§63.4	Prohibited activities and circumvention	Yes.	
§63.5	Construction and reconstruction	Yes.	
§63.6(a)	Applicability	Yes.	
§63.6(b)(1)-(4)	Compliance dates for new and reconstructed sources	Yes.	
§63.6(b)(5)	Notification	Yes.	
§63.6(b)(6)	[Reserved]		
§63.6(b)(7)	Compliance dates for new and reconstructed area sources that become major sources	Yes.	
§63.6(c)(1)-(2)	Compliance dates for existing sources	Yes.	
§63.6(c)(3)-(4)	[Reserved]		

§63.6(c)(5)	Compliance dates for existing area sources that become major sources	Yes.	
§63.6(d)	[Reserved]		
§63.6(e)	Operation and maintenance	No.	
§63.6(f)(1)	Applicability of standards	No.	
§63.6(f)(2)	Methods for determining compliance	Yes.	
§63.6(f)(3)	Finding of compliance	Yes.	
§63.6(g)(1)-(3)	Use of alternate standard	Yes.	
§63.6(h)	Opacity and visible emission standards	No	Subpart ZZZZ does not contain opacity or visible emission standards.
§63.6(i)	Compliance extension procedures and criteria	Yes.	
§63.6(j)	Presidential compliance exemption	Yes.	
§63.7(a)(1)-(2)	Performance test dates	Yes	Subpart ZZZZ contains performance test dates at §§63.6610, 63.6611, and 63.6612.
§63.7(a)(3)	CAA section 114 authority	Yes.	
§63.7(b)(1)	Notification of performance test	Yes	Except that §63.7(b)(1) only applies as specified in §63.6645.
§63.7(b)(2)	Notification of rescheduling	Yes	Except that §63.7(b)(2) only applies as specified in §63.6645.
§63.7(c)	Quality assurance/test plan	Yes	Except that §63.7(c) only applies as specified in §63.6645.
§63.7(d)	Testing facilities	Yes.	
§63.7(e)(1)	Conditions for conducting performance tests	No.	Subpart ZZZZ specifies conditions for conducting performance tests at §63.6620.

§63.7(e)(2)	Conduct of performance tests and reduction of data	Yes	Subpart ZZZZ specifies test methods at §63.6620.
§63.7(e)(3)	Test run duration	Yes.	
§63.7(e)(4)	Administrator may require other testing under section 114 of the CAA	Yes.	
§63.7(f)	Alternative test method provisions	Yes.	
§63.7(g)	Performance test data analysis, recordkeeping, and reporting	Yes.	
§63.7(h)	Waiver of tests	Yes.	
§63.8(a)(1)	Applicability of monitoring requirements	Yes	Subpart ZZZZ contains specific requirements for monitoring at §63.6625.
§63.8(a)(2)	Performance specifications	Yes.	
§63.8(a)(3)	[Reserved]		
§63.8(a)(4)	Monitoring for control devices	No.	
§63.8(b)(1)	Monitoring	Yes.	
§63.8(b)(2)-(3)	Multiple effluents and multiple monitoring systems	Yes.	
§63.8(c)(1)	Monitoring system operation and maintenance	Yes.	
§63.8(c)(1)(i)	Routine and predictable SSM	No	
§63.8(c)(1)(ii)	SSM not in Startup Shutdown Malfunction Plan	Yes.	
§63.8(c)(1)(iii)	Compliance with operation and maintenance requirements	No	
§63.8(c)(2)-(3)	Monitoring system installation	Yes.	
§63.8(c)(4)	Continuous monitoring system (CMS) requirements	Yes	Except that subpart ZZZZ does not require Continuous Opacity Monitoring System (COMS).
§63.8(c)(5)	COMS minimum procedures	No	Subpart ZZZZ does not require COMS.
§63.8(c)(6)-(8)	CMS requirements	Yes	Except that subpart ZZZZ does not require COMS.

§63.8(d)	CMS quality control	Yes.	
§63.8(e)	CMS performance evaluation	Yes	Except for §63.8(e)(5)(ii), which applies to COMS.
		Except that §63.8(e) only applies as specified in §63.6645.	
§63.8(f)(1)-(5)	Alternative monitoring method	Yes	Except that §63.8(f)(4) only applies as specified in §63.6645.
§63.8(f)(6)	Alternative to relative accuracy test	Yes	Except that §63.8(f)(6) only applies as specified in §63.6645.
§63.8(g)	Data reduction	Yes	Except that provisions for COMS are not applicable. Averaging periods for demonstrating compliance are specified at §§63.6635 and 63.6640.
§63.9(a)	Applicability and State delegation of notification requirements	Yes.	
§63.9(b)(1)-(5)	Initial notifications	Yes	Except that §63.9(b)(3) is reserved.
		Except that §63.9(b) only applies as specified in §63.6645.	
§63.9(c)	Request for compliance extension	Yes	Except that §63.9(c) only applies as specified in §63.6645.
§63.9(d)	Notification of special compliance requirements for new sources	Yes	Except that §63.9(d) only applies as specified in §63.6645.
§63.9(e)	Notification of performance test	Yes	Except that §63.9(e) only applies as specified in §63.6645.

§63.9(f)	Notification of visible emission (VE)/opacity test	No	Subpart ZZZZ does not contain opacity or VE standards.
§63.9(g)(1)	Notification of performance evaluation	Yes	Except that §63.9(g) only applies as specified in §63.6645.
§63.9(g)(2)	Notification of use of COMS data	No	Subpart ZZZZ does not contain opacity or VE standards.
§63.9(g)(3)	Notification that criterion for alternative to RATA is exceeded	Yes	If alternative is in use.
		Except that §63.9(g) only applies as specified in §63.6645.	
§63.9(h)(1)-(6)	Notification of compliance status	Yes	Except that notifications for sources using a CEMS are due 30 days after completion of performance evaluations. §63.9(h)(4) is reserved.
			Except that §63.9(h) only applies as specified in §63.6645.
§63.9(i)	Adjustment of submittal deadlines	Yes.	
§63.9(j)	Change in previous information	Yes.	
§63.10(a)	Administrative provisions for recordkeeping/reporting	Yes.	
§63.10(b)(1)	Record retention	Yes	Except that the most recent 2 years of data do not have to be retained on site.
§63.10(b)(2)(i)-(v)	Records related to SSM	No.	
§63.10(b)(2)(vi)-(xi)	Records	Yes.	
§63.10(b)(2)(xii)	Record when under waiver	Yes.	

§63.10(b)(2)(xiii)	Records when using alternative to RATA	Yes	For CO standard if using RATA alternative.
§63.10(b)(2)(xiv)	Records of supporting documentation	Yes.	
§63.10(b)(3)	Records of applicability determination	Yes.	
§63.10(c)	Additional records for sources using CEMS	Yes	Except that §63.10(c)(2)-(4) and (9) are reserved.
§63.10(d)(1)	General reporting requirements	Yes.	
§63.10(d)(2)	Report of performance test results	Yes.	
§63.10(d)(3)	Reporting opacity or VE observations	No	Subpart ZZZZ does not contain opacity or VE standards.
§63.10(d)(4)	Progress reports	Yes.	
§63.10(d)(5)	Startup, shutdown, and malfunction reports	No.	
§63.10(e)(1) and (2)(i)	Additional CMS Reports	Yes.	
§63.10(e)(2)(ii)	COMS-related report	No	Subpart ZZZZ does not require COMS.
§63.10(e)(3)	Excess emission and parameter exceedances reports	Yes.	Except that §63.10(e)(3)(i)(C) is reserved.
§63.10(e)(4)	Reporting COMS data	No	Subpart ZZZZ does not require COMS.
§63.10(f)	Waiver for recordkeeping/reporting	Yes.	
§63.11	Flares	No.	
§63.12	State authority and delegations	Yes.	
§63.13	Addresses	Yes.	
§63.14	Incorporation by reference	Yes.	
§63.15	Availability of information	Yes.	

[75 FR 9688, Mar. 3, 2010, as amended at 78 FR 6720, Jan. 30, 2013]

Appendix A to Subpart ZZZZ of Part 63—Protocol for Using an Electrochemical Analyzer to Determine Oxygen and Carbon Monoxide Concentrations From Certain Engines

1.0 Scope and Application. What is this Protocol?

This protocol is a procedure for using portable electrochemical (EC) cells for measuring carbon monoxide (CO) and oxygen (O_2) concentrations in controlled and uncontrolled emissions from existing stationary 4-stroke lean burn and 4-stroke rich burn reciprocating internal combustion engines as specified in the applicable rule.

1.1 Analytes. What does this protocol determine?

This protocol measures the engine exhaust gas concentrations of carbon monoxide (CO) and oxygen (O_2).

Analyte	**CAS No.**	**Sensitivity**
Carbon monoxide (CO)	630-08-0	Minimum detectable limit should be 2 percent of the nominal range or 1 ppm, whichever is less restrictive.
Oxygen (O_2)	*7782-44-7*	

1.2 Applicability. When is this protocol acceptable?

This protocol is applicable to 40 CFR part 63, subpart ZZZZ. Because of inherent cross sensitivities of EC cells, you must not apply this protocol to other emissions sources without specific instruction to that effect.

1.3 Data Quality Objectives. How good must my collected data be?

Refer to Section 13 to verify and document acceptable analyzer performance.

1.4 Range. What is the targeted analytical range for this protocol?

The measurement system and EC cell design(s) conforming to this protocol will determine the analytical range for each gas component. The nominal ranges are defined by choosing up-scale calibration gas concentrations near the maximum anticipated flue gas concentrations for CO and O_2, or no more than twice the permitted CO level.

1.5 Sensitivity. What minimum detectable limit will this protocol yield for a particular gas component?

The minimum detectable limit depends on the nominal range and resolution of the specific EC cell used, and the signal to noise ratio of the measurement system. The minimum detectable limit should be 2 percent of the nominal range or 1 ppm, whichever is less restrictive.

2.0 Summary of Protocol

In this protocol, a gas sample is extracted from an engine exhaust system and then conveyed to a portable EC analyzer for measurement of CO and O_2 gas concentrations. This method provides measurement system performance specifications and sampling protocols to ensure reliable data. You may use additions to, or modifications of vendor supplied measurement systems (e.g., heated or unheated sample lines, thermocouples, flow meters, selective gas scrubbers, etc.) to meet the design specifications of this protocol. Do not make changes to the measurement system from the as-verified configuration (Section 3.12).

3.0 Definitions

3.1 Measurement System. The total equipment required for the measurement of CO and O_2 concentrations. The measurement system consists of the following major subsystems:

3.1.1 Data Recorder. A strip chart recorder, computer or digital recorder for logging measurement data from the analyzer output. You may record measurement data from the digital data display manually or electronically.

3.1.2 Electrochemical (EC) Cell. A device, similar to a fuel cell, used to sense the presence of a specific analyte and generate an electrical current output proportional to the analyte concentration.

3.1.3 Interference Gas Scrubber. A device used to remove or neutralize chemical compounds that may interfere with the selective operation of an EC cell.

3.1.4 Moisture Removal System. Any device used to reduce the concentration of moisture in the sample stream so as to protect the EC cells from the damaging effects of condensation and to minimize errors in measurements caused by the scrubbing of soluble gases.

3.1.5 Sample Interface. The portion of the system used for one or more of the following: sample acquisition; sample transport; sample conditioning or protection of the EC cell from any degrading effects of the engine exhaust effluent; removal of particulate matter and condensed moisture.

3.2 Nominal Range. The range of analyte concentrations over which each EC cell is operated (normally 25 percent to 150 percent of up-scale calibration gas value). Several nominal ranges can be used for any given cell so long as the calibration and repeatability checks for that range remain within specifications.

3.3 Calibration Gas. A vendor certified concentration of a specific analyte in an appropriate balance gas.

3.4 Zero Calibration Error. The analyte concentration output exhibited by the EC cell in response to zero-level calibration gas.

3.5 Up-Scale Calibration Error. The mean of the difference between the analyte concentration exhibited by the EC cell and the certified concentration of the up-scale calibration gas.

3.6 Interference Check. A procedure for quantifying analytical interference from components in the engine exhaust gas other than the targeted analytes.

3.7 Repeatability Check. A protocol for demonstrating that an EC cell operated over a given nominal analyte concentration range provides a stable and consistent response and is not significantly affected by repeated exposure to that gas.

3.8 Sample Flow Rate. The flow rate of the gas sample as it passes through the EC cell. In some situations, EC cells can experience drift with changes in flow rate. The flow rate must be monitored and documented during all phases of a sampling run.

3.9 Sampling Run. A timed three-phase event whereby an EC cell's response rises and plateaus in a sample conditioning phase, remains relatively constant during a measurement data phase, then declines during a refresh phase. The sample conditioning phase exposes the EC cell to the gas sample for a length of time sufficient to reach a constant response. The measurement data phase is the time interval during which gas sample measurements can be made that meet the acceptance criteria of this protocol. The refresh phase then purges the EC cells with CO-free air. The refresh phase replenishes requisite O_2 and moisture in the electrolyte reserve and provides a mechanism to de-gas or desorb any interference gas scrubbers or filters so as to enable a stable CO EC cell response. There are four primary types of sampling runs: pre- sampling calibrations; stack gas sampling; post-sampling calibration checks; and measurement system repeatability checks. Stack gas sampling runs can be chained together for extended evaluations, providing all other procedural specifications are met.

3.10 Sampling Day. A time not to exceed twelve hours from the time of the pre-sampling calibration to the post-sampling calibration check. During this time, stack gas sampling runs can be repeated without repeated recalibrations, providing all other sampling specifications have been met.

3.11 Pre-Sampling Calibration/Post-Sampling Calibration Check. The protocols executed at the beginning and end of each sampling day to bracket measurement readings with controlled performance checks.

3.12 Performance-Established Configuration. The EC cell and sampling system configuration that existed at the time that it initially met the performance requirements of this protocol.

4.0 INTERFERENCES.

When present in sufficient concentrations, NO and NO_2 are two gas species that have been reported to interfere with CO concentration measurements. In the likelihood of this occurrence, it is the protocol user's responsibility to employ and properly maintain an appropriate CO EC cell filter or scrubber for removal of these gases, as described in Section 6.2.12.

5.0 SAFETY. [RESERVED]

6.0 EQUIPMENT AND SUPPLIES.

6.1 What equipment do I need for the measurement system?

The system must maintain the gas sample at conditions that will prevent moisture condensation in the sample transport lines, both before and as the sample gas contacts the EC cells. The essential components of the measurement system are described below.

6.2 Measurement System Components.

6.2.1 Sample Probe. A single extraction-point probe constructed of glass, stainless steel or other non-reactive material, and of length sufficient to reach any designated sampling point. The sample probe must be designed to prevent plugging due to condensation or particulate matter.

6.2.2 Sample Line. Non-reactive tubing to transport the effluent from the sample probe to the EC cell.

6.2.3 Calibration Assembly (optional). A three-way valve assembly or equivalent to introduce calibration gases at ambient pressure at the exit end of the sample probe during calibration checks. The assembly must be designed such that only stack gas or calibration gas flows in the sample line and all gases flow through any gas path filters.

6.2.4 Particulate Filter (optional). Filters before the inlet of the EC cell to prevent accumulation of particulate material in the measurement system and extend the useful life of the components. All filters must be fabricated of materials that are non-reactive to the gas mixtures being sampled.

6.2.5 Sample Pump. A leak-free pump to provide undiluted sample gas to the system at a flow rate sufficient to minimize the response time of the measurement system. If located upstream of the EC cells, the pump must be constructed of a material that is non-reactive to the gas mixtures being sampled.

6.2.8 Sample Flow Rate Monitoring. An adjustable rotameter or equivalent device used to adjust and maintain the sample flow rate through the analyzer as prescribed.

6.2.9 Sample Gas Manifold (optional). A manifold to divert a portion of the sample gas stream to the analyzer and the remainder to a by-pass discharge vent. The sample gas manifold

may also include provisions for introducing calibration gases directly to the analyzer. The manifold must be constructed of a material that is non-reactive to the gas mixtures being sampled.

6.2.10 EC cell. A device containing one or more EC cells to determine the CO and O_2 concentrations in the sample gas stream. The EC cell(s) must meet the applicable performance specifications of Section 13 of this protocol.

6.2.11 Data Recorder. A strip chart recorder, computer or digital recorder to make a record of analyzer output data. The data recorder resolution (i.e., readability) must be no greater than 1 ppm for CO; 0.1 percent for O_2; and one degree (either °C or °F) for temperature. Alternatively, you may use a digital or analog meter having the same resolution to observe and manually record the analyzer responses.

6.2.12 Interference Gas Filter or Scrubber. A device to remove interfering compounds upstream of the CO EC cell. Specific interference gas filters or scrubbers used in the performance-established configuration of the analyzer must continue to be used. Such a filter or scrubber must have a means to determine when the removal agent is exhausted. Periodically replace or replenish it in accordance with the manufacturer's recommendations.

7.0 Reagents and Standards. What calibration gases are needed?

7.1 Calibration Gases. CO calibration gases for the EC cell must be CO in nitrogen or CO in a mixture of nitrogen and O_2. Use CO calibration gases with labeled concentration values certified by the manufacturer to be within ±5 percent of the label value. Dry ambient air (20.9 percent O_2) is acceptable for calibration of the O_2 cell. If needed, any lower percentage O_2 calibration gas must be a mixture of O_2 in nitrogen.

7.1.1 Up-Scale CO Calibration Gas Concentration. Choose one or more up-scale gas concentrations such that the average of the stack gas measurements for each stack gas sampling run are between 25 and 150 percent of those concentrations. Alternatively, choose an up-scale gas that does not exceed twice the concentration of the applicable outlet standard. If a measured gas value exceeds 150 percent of the up-scale CO calibration gas value at any time during the stack gas sampling run, the run must be discarded and repeated.

7.1.2 Up-Scale O_2 Calibration Gas Concentration.

Select an O_2 gas concentration such that the difference between the gas concentration and the average stack gas measurement or reading for each sample run is less than 15 percent O_2. When the average exhaust gas O_2 readings are above 6 percent, you may use dry ambient air (20.9 percent O_2) for the up-scale O_2 calibration gas.

7.1.3 Zero Gas. Use an inert gas that contains less than 0.25 percent of the up-scale CO calibration gas concentration. You may use dry air that is free from ambient CO and other combustion gas products (e.g., CO_2).

8.0 Sample Collection and Analysis

8.1 Selection of Sampling Sites.

8.1.1 Control Device Inlet. Select a sampling site sufficiently downstream of the engine so that the combustion gases should be well mixed. Use a single sampling extraction point near the center of the duct (e.g., within the 10 percent centroidal area), unless instructed otherwise.

8.1.2 Exhaust Gas Outlet. Select a sampling site located at least two stack diameters downstream of any disturbance (e.g., turbocharger exhaust, crossover junction or recirculation take-off) and at least one-half stack diameter upstream of the gas discharge to the atmosphere. Use a single sampling extraction point near the center of the duct (e.g., within the 10 percent centroidal area), unless instructed otherwise.

8.2 Stack Gas Collection and Analysis. Prior to the first stack gas sampling run, conduct that the pre-sampling calibration in accordance with Section 10.1. Use Figure 1 to record all data. Zero the analyzer with zero gas. Confirm and record that the scrubber media color is correct and not exhausted. Then position the probe at the sampling point and begin the sampling run at the same flow rate used during the up-scale calibration. Record the start time. Record all EC cell output responses and the flow rate during the "sample conditioning phase" once per minute until constant readings are obtained. Then begin the "measurement data phase" and record readings every 15 seconds for at least two minutes (or eight readings), or as otherwise required to achieve two continuous minutes of data that meet the specification given in Section 13.1. Finally, perform the "refresh phase" by introducing dry air, free from CO and other combustion gases, until several minute-to-minute readings of consistent value have been obtained. For each run use the "measurement data phase" readings to calculate the average stack gas CO and O_2 concentrations.

8.3 EC Cell Rate. Maintain the EC cell sample flow rate so that it does not vary by more than ±10 percent throughout the pre-sampling calibration, stack gas sampling and post-sampling calibration check. Alternatively, the EC cell sample flow rate can be maintained within a tolerance range that does not affect the gas concentration readings by more than ±3 percent, as instructed by the EC cell manufacturer.

9.0 Quality Control (Reserved)

10.0 Calibration and Standardization

10.1 Pre-Sampling Calibration. Conduct the following protocol once for each nominal range to be used on each EC cell before performing a stack gas sampling run on each field sampling day. Repeat the calibration if you replace an EC cell before completing all of the sampling runs. There is no prescribed order for calibration of the EC cells; however, each cell must complete the measurement data phase during calibration. Assemble the measurement system by following the manufacturer's recommended protocols including for preparing and preconditioning the EC cell. Assure the measurement system has no leaks and verify the gas scrubbing agent is not depleted. Use Figure 1 to record all data.

10.1.1 Zero Calibration. For both the O_2 and CO cells, introduce zero gas to the measurement system (e.g., at the calibration assembly) and record the concentration reading every minute until readings are constant for at least two consecutive minutes. Include the time and sample flow rate. Repeat the steps in this section at least once to verify the zero calibration for each component gas.

10.1.2 Zero Calibration Tolerance. For each zero gas introduction, the zero level output must be less than or equal to ±3 percent of the up-scale gas value or ±1 ppm, whichever is less restrictive, for the CO channel and less than or equal to ±0.3 percent O_2 for the O_2 channel.

10.1.3 Up-Scale Calibration. Individually introduce each calibration gas to the measurement system (e.g., at the calibration assembly) and record the start time. Record all EC cell output responses and the flow rate during this "sample conditioning phase" once per minute until readings are constant for at least two minutes. Then begin the "measurement data phase" and record readings every 15 seconds for a total of two minutes, or as otherwise required. Finally, perform the "refresh phase" by introducing dry air, free from CO and other combustion gases, until readings are constant for at least two consecutive minutes. Then repeat the steps in this section at least once to verify the calibration for each component gas. Introduce all gases to flow through the entire sample handling system (i.e., at the exit end of the sampling probe or the calibration assembly).

10.1.4 Up-Scale Calibration Error. The mean of the difference of the "measurement data phase" readings from the reported standard gas value must be less than or equal to ±5 percent or ±1 ppm for CO or ±0.5 percent O_2, whichever is less restrictive, respectively. The maximum allowable deviation from the mean measured value of any single "measurement data phase" reading must be less than or equal to ±2 percent or ±1 ppm for CO or ±0.5 percent O_2, whichever is less restrictive, respectively.

10.2 Post-Sampling Calibration Check. Conduct a stack gas post-sampling calibration check after the stack gas sampling run or set of runs and within 12 hours of the initial calibration. Conduct up-scale and zero calibration checks using the protocol in Section 10.1. Make no changes to the sampling system or EC cell calibration until all post-sampling calibration checks have been recorded. If either the zero or up-scale calibration error exceeds the respective specification in Sections 10.1.2 and 10.1.4 then all measurement data collected since the previous successful calibrations are invalid and re-calibration and re-sampling are required. If the sampling system is disassembled or the EC cell calibration is adjusted, repeat the calibration check before conducting the next analyzer sampling run.

11.0 Analytical Procedure

The analytical procedure is fully discussed in Section 8.

12.0 Calculations and Data Analysis

Determine the CO and O_2 concentrations for each stack gas sampling run by calculating the mean gas concentrations of the data recorded during the "measurement data phase".

13.0 PROTOCOL PERFORMANCE

Use the following protocols to verify consistent analyzer performance during each field sampling day.

13.1 Measurement Data Phase Performance Check. Calculate the mean of the readings from the "measurement data phase". The maximum allowable deviation from the mean for each of the individual readings is ±2 percent, or ±1 ppm, whichever is less restrictive. Record the mean value and maximum deviation for each gas monitored. Data must conform to Section 10.1.4. The EC cell flow rate must conform to the specification in Section 8.3.

Example: A measurement data phase is invalid if the maximum deviation of any single reading comprising that mean is greater than ±2 percent *or* ±1 ppm (the default criteria). For example, if the mean = 30 ppm, single readings of below 29 ppm and above 31 ppm are disallowed).

13.2 Interference Check. Before the initial use of the EC cell and interference gas scrubber in the field, and semi-annually thereafter, challenge the interference gas scrubber with NO and NO_2 gas standards that are generally recognized as representative of diesel-fueled engine NO and NO_2 emission values. Record the responses displayed by the CO EC cell and other pertinent data on Figure 1 or a similar form.

13.2.1 Interference Response. The combined NO and NO_2 interference response should be less than or equal to ±5 percent of the up-scale CO calibration gas concentration.

13.3 Repeatability Check. Conduct the following check once for each nominal range that is to be used on the CO EC cell within 5 days prior to each field sampling program. If a field sampling program lasts longer than 5 days, repeat this check every 5 days. Immediately repeat the check if the EC cell is replaced or if the EC cell is exposed to gas concentrations greater than 150 percent of the highest up-scale gas concentration.

13.3.1 Repeatability Check Procedure. Perform a complete EC cell sampling run (all three phases) by introducing the CO calibration gas to the measurement system and record the response. Follow Section 10.1.3. Use Figure 1 to record all data. Repeat the run three times for a total of four complete runs. During the four repeatability check runs, do not adjust the system except where necessary to achieve the correct calibration gas flow rate at the analyzer.

13.3.2 Repeatability Check Calculations. Determine the highest and lowest average "measurement data phase" CO concentrations from the four repeatability check runs and record the results on Figure 1 or a similar form. The absolute value of the difference between the maximum and minimum average values recorded must not vary more than ±3 percent or ±1 ppm of the up-scale gas value, whichever is less restrictive.

14.0 Pollution Prevention (Reserved)

15.0 Waste Management (Reserved)

16.0 Alternative Procedures (Reserved)

17.0 References

(1) "Development of an Electrochemical Cell Emission Analyzer Test Protocol", Topical Report, Phil Juneau, Emission Monitoring, Inc., July 1997.

(2) "Determination of Nitrogen Oxides, Carbon Monoxide, and Oxygen Emissions from Natural Gas-Fired Engines, Boilers, and Process Heaters Using Portable Analyzers", EMC Conditional Test Protocol 30 (CTM-30), Gas Research Institute Protocol GRI-96/0008, Revision 7, October 13, 1997.

(3) "ICAC Test Protocol for Periodic Monitoring", EMC Conditional Test Protocol 34 (CTM-034), The Institute of Clean Air Companies, September 8, 1999.

(4) "Code of Federal Regulations", Protection of Environment, 40 CFR, Part 60, Appendix A, Methods 1-4; 10.

Table 1: Appendix A—Sampling Run Data.

Facility_____ Engine I.D._____ Date_____											
Run Type:	(_)		(_)				(_)			(_)	
(X)	Pre-Sample Calibration		Stack Gas Sample				Post-Sample Cal. Check			Repeatability Check	
Run #	1	1	2	2	3	3	4	4	Time	Scrub. OK	Flow- Rate
Gas	O_2	CO	O_2	CO	O_2	CO	O_2	CO			
Sample Cond. Phase											
″											
″											

″											
″											
Measurement Data Phase											
″											
″											
″											
″											
″											
″											
″											
″											
″											
″											
Mean											
Refresh Phase											
″											
″											
″											
″											

[78 FR 6721, Jan. 30, 2013]

40 CFR 63, Subpart ZZZZZZ

National Emission Standards for Hazardous Air Pollutants: Area Source Standards for Aluminum, Copper, Other Nonferrous Foundries

§63.11544 Am I subject to this subpart?

(a) You are subject to this subpart if you own or operate an aluminum foundry, copper foundry, or other nonferrous foundry as defined in §63.11556, "What definitions apply to this subpart?" that is an area source of hazardous air pollutant (HAP) emissions as defined in §63.2 and meets the criteria specified in paragraphs (a)(1) through (4) of this section. Once you are subject to this subpart, you must remain subject to this subpart even if you subsequently do not meet the criteria in paragraphs (a)(1) through (4) of this section.

P. Kay Metal does not own or operate an aluminum foundry, copper foundry, or other nonferrous foundry because the definition of foundry excludes primary and secondary metal producers that cast molten metal to produce simple shapes such as sows, ingots, bars, rods, and billets. This does not apply.

(1) Your aluminum foundry uses material containing aluminum foundry HAP, as defined in §63.11556, "What definitions apply to this subpart?"; or

(2) Your copper foundry uses material containing copper foundry HAP, as defined in §63.11556, "What definitions apply to this subpart?"; or

(3) Your other nonferrous foundry uses material containing other nonferrous foundry HAP, as defined in §63.11556, "What definitions apply to this subpart?".

(4) Your aluminum foundry, copper foundry, or other nonferrous foundry has an annual metal melt production (for existing affected sources) or an annual metal melt capacity (for new affected sources) of at least 600 tons per year (tpy) of aluminum, copper, and other nonferrous metals, including all associated alloys. You must determine the annual metal melt production and capacity for the time period as described in paragraphs (a)(4)(i) through (iv) of this section. The quantity of ferrous metals melted in iron or steel melting operations and the quantity of nonferrous metal melted in non-foundry melting operations are not included in determining the annual metal melt production for existing affected sources or the annual metal melt capacity for new affected sources.

(i) If you own or operate a melting operation at an aluminum, copper or other nonferrous foundry as of February 9, 2009, you must determine if you are subject to this rule based on your facility's annual metal melt production for calendar year 2010.

(ii) If you construct or reconstruct a melting operation at an aluminum, copper or other nonferrous foundry after February 9, 2009, you must determine if you are subject to this rule based on your facility's annual metal melt capacity at startup.

(iii) If your foundry with an existing melting operation increases production after calendar year 2010 such that the annual metal melt production equals or exceeds 600 tpy, you must submit a written notification of applicability to the Administrator within 30 days after the end of the calendar year and comply within 2 years after the date of the notification.

(iv) If your foundry with a new melting operation increases capacity after startup such that the annual metal melt capacity equals or exceeds 600 tpy, you must submit a written notification of applicability to the Administrator within 30 days after the capacity increase year and comply at the time of the capacity increase.

(b) This subpart applies to each new or existing affected source located at an aluminum, copper or other nonferrous foundry that is an area source as defined by §63.2. The affected source is the collection of all melting operations located at an aluminum, copper, or other nonferrous foundry.

(c) An affected source is an existing source if you commenced construction or reconstruction of the affected source on or before February 9, 2009.

(d) An affected source is a new source if you commenced construction or reconstruction of the affected source after February 9, 2009.

(e) This subpart does not apply to research or laboratory facilities, as defined in section 112(c)(7) of the Clean Air Act.

(f) You are exempt from the obligation to obtain a permit under 40 CFR part 70 or 40 CFR part 71, provided you are not otherwise required to obtain a permit under 40 CFR 70.3(a) or 40 CFR 71.3(a) for a reason other than your status as an area source under this subpart. Notwithstanding the previous sentence, you must continue to comply with the provisions of this subpart applicable to area sources.

[74 FR 30393, June 25, 2009, as amended at 74 FR 46495, Sept. 10, 2009]

40 CFR 63 Subpart ZZZZZZ does not apply to P. Kay Metal.

§63.11545 What are my compliance dates?

(a) If you own or operate an existing affected source, you must achieve compliance with the applicable provisions of this subpart no later than June 27, 2011.

(b) If you start up a new affected source on or before June 25, 2009, you must achieve compliance with the provisions of this subpart no later than June 25, 2009.

(c) If you start up a new affected source after June 25, 2009, you must achieve compliance with the provisions of this subpart upon startup of your affected source.

STANDARDS AND COMPLIANCE REQUIREMENTS

§63.11550 What are my standards and management practices?

(a) If you own or operate new or existing affected sources at an aluminum foundry, copper foundry, or other nonferrous foundry that is subject to this subpart, you must comply with the requirements in paragraphs (a)(1) through (3) of this section.

(1) Cover or enclose each melting furnace that is equipped with a cover or enclosure during the melting operation to the extent practicable (e.g., except when access is needed; including, but not limited to charging, alloy addition, and tapping).

(2) Purchase only metal scrap that has been depleted (to the extent practicable) of aluminum foundry HAP, copper foundry HAP, or other nonferrous foundry HAP (as applicable) in the materials charged to the melting furnace, except metal scrap that is purchased specifically for its HAP metal content for use in alloying or to meet specifications for the casting. This requirement does not apply to material that is not scrap (e.g., ingots, alloys, sows) or to materials that are not purchased (e.g., internal scrap, customer returns).

(3) Prepare and operate pursuant to a written management practices plan. The management practices plan must include the required management practices in paragraphs (a)(1) and (2) of this section and may include any other management practices that are implemented at the facility to minimize emissions from melting furnaces. You must inform your appropriate employees of the management practices that they must follow. You may use your standard operating procedures as the management practices plan provided the standard operating procedures include the required management practices in paragraphs (a)(1) and (2) of this section.

(b) If you own or operate a new or existing affected source that is located at a large foundry as defined in §63.11556, you must comply with the additional requirements in paragraphs (b)(1) and (2) of this section.

(1) For existing affected sources located at a large foundry, you must achieve a particulate matter (PM) control efficiency of at least 95.0 percent or emit no more than an outlet PM concentration limit of 0.034 grams per dry standard cubic meter (g/dscm) (0.015 grains per dry standard cubic feet (gr/dscf)).

(2) For new affected sources located at a large foundry, you must achieve a PM control efficiency of at least 99.0 percent or emit no more than an outlet PM concentration limit of at most 0.023 g/dscm (0.010 gr/dscf).

(c) If you own or operate an affected source at a small foundry that subsequently becomes a large foundry after the applicable compliance date, you must meet the requirements in paragraphs (c)(1) through (3) of this section.

(1) You must notify the Administrator within 30 days after the capacity increase or the production increase, whichever is appropriate;

(2) You must modify any applicable permit limits within 30 days after the capacity increase or the production increase to reflect the current production or capacity, if not done so prior to the increase;

(3) You must comply with the PM control requirements in paragraph (b) of this section no later than 2 years from the date of issuance of the permit for the capacity increase or production increase, or in the case of no permit issuance, the date of the increase in capacity or production, whichever occurs first.

(d) These standards apply at all times.

§63.11551 What are my initial compliance requirements?

(a) Except as specified in paragraph (b) of this section, you must conduct a performance test for existing and new sources at a large copper or other nonferrous foundry that is subject to §63.11550(b). You must conduct the test within 180 days of your compliance date and report the results in your Notification of Compliance Status according to §63.9(h).

(b) If you own or operate an existing affected source at a large copper or other nonferrous foundry that is subject to §63.11550(b), you are not required to conduct a performance test if a prior performance test was conducted within the past 5 years of the compliance date using the same methods specified in paragraph (c) of this section and you meet either of the following two conditions:

(1) No process changes have been made since the test; or

(2) You demonstrate to the satisfaction of the permitting authority that the results of the performance test, with or without adjustments, reliably demonstrate compliance despite process changes.

(c) You must conduct each performance test according to the requirements in §63.7 and the requirements in paragraphs (c)(1) and (2) of this section.

(1) You must determine the concentration of PM (for the concentration standard) or the mass rate of PM in pounds per hour at the inlet and outlet of the control device (for the percent reduction standard) according to the following test methods:

(i) Method 1 or 1A (40 CFR part 60, appendix A-1) to select sampling port locations and the number of traverse points in each stack or duct. If you are complying with the concentration provision in §63.11550(b), sampling sites must be located at the outlet of the control device and prior to any releases to the atmosphere. If you are complying with the percent reduction provision in §63.11550(b), sampling sites must be located at the inlet and outlet of the control device and prior to any releases to the atmosphere.

(ii) Method 2, 2A, 2C, 2D, 2F (40 CFR part 60, appendix A-1), or Method 2G (40 CFR part 60, appendix A-2) to determine the volumetric flow rate of the stack gas.

(iii) Method 3, 3A, or 3B (40 CFR part 60, appendix A-2) to determine the dry molecular weight of the stack gas. You may use ANSI/ASME PTC 19.10-1981, "Flue and Exhaust Gas Analyses" (incorporated by reference—see §63.14) as an alternative to EPA Method 3B.

(iv) Method 4 (40 CFR part 60, appendix A-3) to determine the moisture content of the stack gas.

(v) Method 5 or 5D (40 CFR part 60, appendix A-3) or Method 17 (40 CFR part 60, appendix A-6) to determine the concentration of PM or mass rate of PM (front half filterable catch only). If you choose to comply with the percent reduction PM standard, you must determine the mass rate of PM at the inlet and outlet in pounds per hour and calculate the percent reduction in PM.

(2) Three valid test runs are needed to comprise a performance test. Each run must cover at least one production cycle (charging, melting, and tapping).

(3) For a source with a single control device exhausted through multiple stacks, you must ensure that three runs are performed by a representative sampling of the stacks satisfactory to the Administrator or his or her delegated representative. You must provide data or an adequate explanation why the stack(s) chosen for testing are representative.

§63.11552 What are my monitoring requirements?

(a) You must record the information specified in §63.11553(c)(2) to document conformance with the management practices plan required in §63.11550(a).

(b) Except as specified in paragraph (b)(3) of this section, if you own or operate an existing affected source at a large foundry, you must conduct visible emissions monitoring according to the requirements in paragraphs (b)(1) and (2) of this section.

(1) You must conduct visual monitoring of the fabric filter discharge point(s) (outlets) for any VE according to the schedule specified in paragraphs (b)(1)(i) and (ii) of this section.

(i) You must perform a visual determination of emissions once per day, on each day the process is in operation, during melting operations.

(ii) If no VE are detected in consecutive daily visual monitoring performed in accordance with paragraph (b)(1)(i) of this section for 30 consecutive days or more of operation of the process, you may decrease the frequency of visual monitoring to once per calendar week of time the process is in operation, during melting operations. If VE are detected during these inspections, you must resume daily visual monitoring of that operation during each day that the process is in operation, in accordance with paragraph (b)(1)(i) of this section until you satisfy the criteria of this section to resume conducting weekly visual monitoring.

(2) If the visual monitoring reveals the presence of any VE, you must initiate procedures to determine the cause of the emissions within 1 hour of the initial observation and alleviate the

cause of the emissions within 3 hours of initial observation by taking whatever corrective action(s) are necessary. You may take more than 3 hours to alleviate a specific condition that causes VE if you identify in the monitoring plan this specific condition as one that could lead to VE in advance, you adequately explain why it is not feasible to alleviate this condition within 3 hours of the time the VE occurs, and you demonstrate that the requested time will ensure alleviation of this condition as expeditiously as practicable.

(3) As an alternative to the monitoring requirements for an existing affected source in paragraphs (b)(1) and (2) of this section, you may install, operate, and maintain a bag leak detection system for each fabric filter according to the requirements in paragraph (c) of this section.

(c) If you own or operate a new affected source located at a large foundry subject to the PM requirements in §63.11550(b)(2) that is equipped with a fabric filter, you must install, operate, and maintain a bag leak detection system for each fabric filter according to paragraphs (c)(1) through (4) of this section.

(1) Each bag leak detection system must meet the specifications and requirements in paragraphs (c)(1)(i) through (viii) of this section.

(i) The bag leak detection system must be certified by the manufacturer to be capable of detecting PM emissions at concentrations of 1 milligram per actual cubic meter (0.00044 grains per actual cubic foot) or less.

(ii) The bag leak detection system sensor must provide output of relative PM loadings. You must continuously record the output from the bag leak detection system using electronic or other means (e.g., using a strip chart recorder or a data logger).

(iii) The bag leak detection system must be equipped with an alarm system that will sound when the system detects an increase in relative particulate loading over the alarm set point established according to paragraph (c)(1)(iv) of this section, and the alarm must be located such that it can be heard by the appropriate plant personnel.

(iv) In the initial adjustment of the bag leak detection system, you must establish, at a minimum, the baseline output by adjusting the sensitivity (range) and the averaging period of the device, the alarm set points, and the alarm delay time.

(v) Following initial adjustment, you must not adjust the averaging period, alarm set point, or alarm delay time without approval from the Administrator or delegated authority, except as provided in paragraph (c)(1)(vi) of this section.

(vi) Once per quarter, you may adjust the sensitivity of the bag leak detection system to account for seasonal effects, including temperature and humidity, according to the procedures identified in the site-specific monitoring plan required by paragraph (c)(2) of this section.

(vii) You must install the bag leak detection sensor downstream of the fabric filter.

(viii) Where multiple detectors are required, the system's instrumentation and alarm may be shared among detectors.

(2) You must prepare a site-specific monitoring plan for each bag leak detection system. You must operate and maintain each bag leak detection system according to the plan at all times. Each monitoring plan must describe the items in paragraphs (c)(2)(i) through (vi) of this section.

(i) Installation of the bag leak detection system;

(ii) Initial and periodic adjustment of the bag leak detection system, including how the alarm set-point and alarm delay time will be established;

(iii) Operation of the bag leak detection system, including quality assurance procedures;

(iv) How the bag leak detection system will be maintained, including a routine maintenance schedule and spare parts inventory list;

(v) How the bag leak detection system output will be recorded and stored; and

(vi) Corrective action procedures as specified in paragraph (c)(3) of this section.

(3) Except as provided in paragraph (c)(4) of this section, you must initiate procedures to determine the cause of every alarm from a bag leak detection system within 1 hour of the alarm and alleviate the cause of the alarm within 3 hours of the alarm by taking whatever corrective action(s) are necessary. Corrective actions may include, but are not limited to, the following:

(i) Inspecting the fabric filter for air leaks, torn or broken bags or filter media, or any other condition that may cause an increase in PM emissions;

(ii) Sealing off defective bags or filter media;

(iii) Replacing defective bags or filter media, or otherwise repairing the control device;

(iv) Sealing off a defective fabric filter compartment;

(v) Cleaning the bag leak detection system probe, or otherwise repairing the bag leak detection system; or

(4) You may take more than 3 hours to alleviate a specific condition that causes an alarm if you identify in the monitoring plan this specific condition as one that could lead to an alarm, adequately explain why it is not feasible to alleviate this condition within 3 hours of the time the alarm occurs, and demonstrate that the requested time will ensure alleviation of this condition as expeditiously as practicable.

(d) If you use a control device other than a fabric filter for new or existing affected sources subject to §63.11550(b), you must submit a request to use an alternative monitoring procedure as required in §63.8(f)(4).

§63.11553 What are my notification, reporting, and recordkeeping requirements?

(a) You must submit the Initial Notification required by §63.9(b)(2) no later than 120 calendar days after June 25, 2009 or within 120 days after the source becomes subject to the standard. The Initial Notification must include the information specified in paragraphs (a)(1) through (3) of this section and may be combined with the Notification of Compliance Status required in paragraph (b) of this section.

(1) The name and address of the owner or operator;

(2) The address (i.e., physical location) of the affected source; and

(3) An identification of the relevant standard, or other requirement, that is the basis of the notification and source's compliance date.

(b) You must submit the Notification of Compliance Status required by §63.9(h) no later than 120 days after the applicable compliance date specified in §63.11545 unless you must conduct a performance test. If you must conduct a performance test, you must submit the Notification of Compliance Status within 60 days of completing the performance test. Your Notification of Compliance Status must indicate if you are a small or large foundry as defined in §63.11556, the production amounts as the basis for the determination, and if you are a large foundry, whether you elect to comply with the control efficiency requirement or PM concentration limit in §63.11550(b). In addition to the information required in §63.9(h)(2) and §63.11551, your notification must include the following certification(s) of compliance, as applicable, and signed by a responsible official:

(1) “This facility will operate in a manner that minimizes HAP emissions from the melting operations to the extent possible. This includes at a minimum that the owners and/or operators of the affected source will cover or enclose each melting furnace that is equipped with a cover or enclosure during melting operations to the extent practicable as required in 63.11550(a)(1).”

(2) “This facility agrees to purchase only metal scrap that has been depleted (to the extent practicable) of aluminum foundry HAP, copper foundry HAP, or other nonferrous foundries HAP (as applicable) in the materials charged to the melting furnace, except for metal scrap that is purchased specifically for its HAP metal content for use in alloying or to meet specifications for the casting as required by 63.11550(a)(2).”

(3) “This facility has prepared and will operate by a written management practices plan according to §63.11550(a)(3).”

(4) If the owner or operator of an existing affected source at a large foundry is certifying compliance based on the results of a previous performance test: "This facility complies with §63.11550(b) based on a previous performance test in accordance with §63.11551(b)."

(5) This certification of compliance is required by the owner or operator that installs bag leak detection systems: "This facility has installed a bag leak detection system in accordance with §63.11552(b)(3) or (c), has prepared a bag leak detection system monitoring plan in accordance with §63.11552(c), and will operate each bag leak detection system according to the plan."

(c) You must keep the records specified in paragraphs (c)(1) through (5) of this section.

(1) As required in §63.10(b)(2)(xiv), you must keep a copy of each notification that you submitted to comply with this subpart and all documentation supporting any Initial Notification or Notification of Compliance Status that you submitted.

(2) You must keep records to document conformance with the management practices plan required by §63.11550 as specified in paragraphs (c)(2)(i) and (ii) of this section.

(i) For melting furnaces equipped with a cover or enclosure, records must identify each melting furnace equipped with a cover or enclosure and document that the procedures in the management practices plan were followed during the monthly inspections. These records may be in the form of a checklist.

(ii) Records documenting that you purchased only metal scrap that has been depleted of HAP metals (to the extent practicable) charged to the melting furnace. If you purchase scrap metal specifically for the HAP metal content for use in alloying or to meet specifications for the casting, you must keep records to document that the HAP metal is included in the material specifications for the cast metal product.

(3) You must keep the records of all performance tests, inspections and monitoring data required by §§63.11551 and 63.11552, and the information identified in paragraphs (c)(3)(i) through (vi) of this section for each required inspection or monitoring.

(i) The date, place, and time of the monitoring event;

(ii) Person conducting the monitoring;

(iii) Technique or method used;

(iv) Operating conditions during the activity;

(v) Results, including the date, time, and duration of the period from the time the monitoring indicated a problem (e.g., VE) to the time that monitoring indicated proper operation; and

(vi) Maintenance or corrective action taken (if applicable).

(4) If you own or operate a new or existing affected source at a small foundry that is not subject to §63.11550(b), you must maintain records to document that your facility melts less than 6,000 tpy total of copper, other nonferrous metal, and all associated alloys (excluding aluminum) in each calendar year.

(5) If you use a bag leak detection system, you must keep the records specified in paragraphs (c)(5)(i) through (iii) of this section.

(i) Records of the bag leak detection system output.

(ii) Records of bag leak detection system adjustments, including the date and time of the adjustment, the initial bag leak detection system settings, and the final bag leak detection system settings.

(iii) The date and time of all bag leak detection system alarms, and for each valid alarm, the time you initiated corrective action, the corrective action taken, and the date on which corrective action was completed.

(d) Your records must be in a form suitable and readily available for expeditious review, according to §63.10(b)(1). As specified in §63.10(b)(1), you must keep each record for 5 years following the date of each recorded action. For records of annual metal melt production, you must keep the records for 5 years from the end of the calendar year. You must keep each record onsite for at least 2 years after the date of each recorded action according to §63.10(b)(1). You may keep the records offsite for the remaining 3 years.

(e) If a deviation occurs during a semiannual reporting period, you must submit a compliance report to your permitting authority according to the requirements in paragraphs (e)(1) and (2) of this section.

(1) The first reporting period covers the period beginning on the compliance date specified in §63.11545 and ending on June 30 or December 31, whichever date comes first after your compliance date. Each subsequent reporting period covers the semiannual period from January 1 through June 30 or from July 1 through December 31. Your compliance report must be postmarked or delivered no later than July 31 or January 31, whichever date comes first after the end of the semiannual reporting period.

(2) A compliance report must include the information in paragraphs (e)(2)(i) through (iv) of this section.

(i) Company name and address.

(ii) Statement by a responsible official, with the official's name, title, and signature, certifying the truth, accuracy and completeness of the content of the report.

(iii) Date of the report and beginning and ending dates of the reporting period.

(iv) Identification of the affected source, the pollutant being monitored, applicable requirement, description of deviation, and corrective action taken.

[74 FR 30393, June 25, 2009, as amended at 74 FR 46495, Sept. 10, 2009]

OTHER REQUIREMENTS AND INFORMATION

§63.11555 What General Provisions apply to this subpart?

Table 1 to this subpart shows which parts of the General Provisions in §§63.1 through 63.16 apply to you.

§63.11556 What definitions apply to this subpart?

Terms used in this subpart are defined in the Clean Air Act, in §63.2, and in this section as follows:

Aluminum foundry means a facility that melts aluminum and pours molten aluminum into molds to manufacture aluminum castings (except die casting) that are complex shapes. For purposes of this subpart, this definition does not include primary or secondary metal producers that cast molten aluminum to produce simple shapes such as sows, ingots, bars, rods, or billets.

Aluminum foundry HAP means any compound of the following metals: beryllium, cadmium, lead, manganese, or nickel, or any of these metals in the elemental form.

Annual copper and other nonferrous foundry metal melt capacity means, for new affected sources, the lower of the copper and other nonferrous metal melting operation capacity, assuming 8,760 operating hours per year or, if applicable, the maximum permitted copper and other nonferrous metal melting operation production rate for the melting operation calculated on an annual basis. Unless otherwise specified in the permit, permitted copper and other nonferrous metal melting operation rates that are not specified on an annual basis must be annualized assuming 24 hours per day, 365 days per year of operation. If the permit limits the operating hours of the melting operation(s) or foundry, then the permitted operating hours are used to annualize the maximum permitted copper and other nonferrous metal melt production rate. The annual copper and other nonferrous metal melt capacity does not include the melt capacity for ferrous metal melted in iron or steel foundry melting operations that are co-located with copper or other nonferrous melting operations or the nonferrous metal melted in non-foundry melting operations.

Annual copper and other nonferrous foundry metal melt production means, for existing affected sources, the quantity of copper and other nonferrous metal melted in melting operations at the foundry in a given calendar year. For the purposes of this subpart, metal melt production is determined on the basis of the quantity of metal charged to the melting operations. The annual copper and nonferrous metal melt production does not include the melt production of ferrous metal melted in iron or steel foundry melting operations that are co-located with copper and

other nonferrous melting operations or the nonferrous metal melted in non-foundry melting operations.

Annual metal melt capacity, for new affected sources, means the lower of the aluminum, copper, and other nonferrous metal melting operation capacity, assuming 8,760 operating hours per year or, if applicable, the maximum permitted aluminum, copper, and other nonferrous metal melting operation production rate for the melting operation calculated on an annual basis. Unless otherwise specified in the permit, permitted aluminum, copper, and other nonferrous metal melting operation rates that are not specified on an annual basis must be annualized assuming 24 hours per day, 365 days per year of operation. If the permit limits the operating hours of the melting operation(s) or foundry, then the permitted operating hours are used to annualize the maximum permitted aluminum, copper, and other nonferrous metal melt production rate. The annual metal melt capacity does not include the melt capacity for ferrous metal melted in iron or steel foundry melting operations that are co-located with aluminum, copper, or other nonferrous melting operations or the nonferrous metal melted in non-foundry melting operations.

Annual metal melt production means, for existing affected sources, the quantity of aluminum, copper, and other nonferrous metal melted in melting operations at the foundry in a given calendar year. For the purposes of this subpart, annual metal melt production is determined on the basis of the quantity of metal charged to the melting operations. The annual metal melt production does not include the melt production of ferrous metal melted in iron or steel foundry melting operations that are co-located with aluminum, copper, or other nonferrous melting operations or the nonferrous metal melted in non-foundry melting operations.

Bag leak detection system means a system that is capable of continuously monitoring relative PM (*i.e.,* dust) loadings in the exhaust of a baghouse to detect bag leaks and other upset conditions. A bag leak detection system includes, but is not limited to, an instrument that operates on triboelectric, light scattering, light transmittance, or other effect to continuously monitor relative PM loadings.

Copper foundry means a foundry that melts copper or copper-based alloys and pours molten copper or copper-based alloys into molds to manufacture copper or copper-based alloy castings (excluding die casting) that are complex shapes. For purposes of this subpart, this definition does not include primary or secondary metal producers that cast molten copper to produce simple shapes such as sows, ingots, billets, bars, anode copper, rods, or copper cake.

Copper foundry HAP means any compound of any of the following metals: lead, manganese, or nickel, or any of these metals in the elemental form.

Deviation means any instance where an affected source subject to this subpart, or an owner or operator of such a source:

(1) Fails to meet any requirement or obligation established by this subpart, including but not limited to any emissions limitation or work practice standard;

(2) Fails to meet any term or condition that is adopted to implement an applicable requirement in this subpart and that is included in the operating permit for any affected source required to obtain such a permit; or

(3) Fails to meet any emissions limitation in this subpart during startup, shutdown, or malfunction, regardless of whether or not such failure is permitted by this subpart.

Die casting means operations classified under the North American Industry Classification System codes 331521 (Aluminum Die-Casting Foundries) and 331522 (Nonferrous (except Aluminum) Die-Casting Foundries) and comprises establishments primarily engaged in introducing molten aluminum, copper, and other nonferrous metal, under high pressure, into molds or dies to make die-castings.

Large foundry means, for an existing affected source, a copper or other nonferrous foundry with an annual metal melt production of copper, other nonferrous metals, and all associated alloys (excluding aluminum) of 6,000 tons or greater. For a new affected source, *large foundry* means a copper or other nonferrous foundry with an annual metal melt capacity of copper, other nonferrous metals, and all associated alloys (excluding aluminum) of 6,000 tons or greater.

Material containing aluminum foundry HAP means a material containing one or more aluminum foundry HAP. Any material that contains beryllium, cadmium, lead, or nickel in amounts greater than or equal to 0.1 percent by weight (as the metal), or contains manganese in amounts greater than or equal to 1.0 percent by weight (as the metal), as shown in formulation data provided by the manufacturer or supplier, such as the Material Safety Data Sheet for the material, is considered to be a material containing aluminum foundry HAP.

Material containing copper foundry HAP means a material containing one or more copper foundry HAP. Any material that contains lead or nickel in amounts greater than or equal to 0.1 percent by weight (as the metal), or contains manganese in amounts greater than or equal to 1.0 percent by weight (as the metal), as shown in formulation data provided by the manufacturer or supplier, such as the Material Safety Data Sheet for the material, is considered to be a material containing copper foundry HAP.

Material containing other nonferrous foundry HAP means a material containing one or more other nonferrous foundry HAP. Any material that contains chromium, lead, or nickel in amounts greater than or equal to 0.1 percent by weight (as the metal), as shown in formulation data provided by the manufacturer or supplier, such as the Material Safety Data Sheet for the material, is considered to be a material containing other nonferrous foundry HAP.

Melting operations (the affected source) means the collection of furnaces (*e.g.*, induction, reverberatory, crucible, tower, dry hearth) used to melt metal ingot, alloyed ingot and/or metal scrap to produce molten metal that is poured into molds to make castings. Melting operations dedicated to melting ferrous metal at an iron and steel foundry are not included in this definition and are not part of the affected source.

Other nonferrous foundry means a facility that melts nonferrous metals other than aluminum, copper, or copper-based alloys and pours the nonferrous metals into molds to manufacture nonferrous metal castings (excluding die casting) that are complex shapes. For purposes of this subpart, this definition does not include primary or secondary metal producers that cast molten nonferrous metals to produce simple shapes such as sows, ingots, bars, rods, or billets.

Other nonferrous foundry HAP means any compound of the following metals: chromium, lead, and nickel, or any of these metals in the elemental form.

Small foundry means, for an existing affected source, a copper or other nonferrous foundry with an annual metal melt production of copper, other nonferrous metals, and all associated alloys (excluding aluminum) of less than 6,000 tons. For a new affected source, *small foundry* means a copper or other nonferrous foundry with an annual metal melt capacity of copper, other nonferrous metals, and all associated alloys (excluding aluminum) of less than 6,000 tons.

§63.11557 Who implements and enforces this subpart?

(a) This subpart can be implemented and enforced by the U.S. EPA or a delegated authority, such as your State, local, or Tribal agency. If the U.S. EPA Administrator has delegated authority to your State, local, or Tribal agency, then that agency has the authority to implement and enforce this subpart. You should contact your U.S. EPA Regional Office to find out if this subpart is delegated to your State, local, or Tribal agency.

(b) In delegating implementation and enforcement authority of this subpart to a State, local, or Tribal agency under 40 CFR part 63, subpart E, the authorities contained in paragraph (c) of this section are retained by the Administrator of the U.S. EPA and are not transferred to the State, local, or Tribal agency.

(c) The authorities that will not be delegated to State, local, or Tribal agencies are listed in paragraphs (c)(1) through (4) of this section.

(1) Approval of alternatives to the applicability requirements in §63.11544, the compliance date requirements in §63.11545, and the applicable standards in §63.11550.

(2) Approval of an alternative nonopacity emissions standard under §63.6(g).

(3) Approval of a major change to a test method under §63.7(e)(2)(ii) and (f). A “major change to test method” is defined in §63.90(a).

(4) Approval of a major change to monitoring under §63.8(f). A “major change to monitoring” is defined in §63.90(a).

(5) Approval of a waiver of recordkeeping or reporting requirements under §63.10(f), or another major change to recordkeeping/reporting. A “major change to recordkeeping/reporting” is defined in §63.90(a).

§63.11558 [Reserved]

Table 1 to Subpart ZZZZZZ of Part 63—Applicability of General Provisions to Aluminum, Copper, and Other Nonferrous Foundries Area Sources

As required in §63.11555, "What General Provisions apply to this subpart?," you must comply with each requirement in the following table that applies to you.

Citation	Subject	Applies to subpart ZZZZZZ?	Explanation
§63.1(a)(1), (a)(2), (a)(3), (a)(4), (a)(6), (a)(10)-(a)(12), (b)(1), (b)(3), (c)(1), (c)(2), (c)(5), (e)	Applicability	Yes	§63.11544(f) exempts affected sources from the obligation to obtain a title V operating permit.
§63.1(a)(5), (a)(7)-(a)(9), (b)(2), (c)(3), (c)(4), (d)	Reserved	No	
§63.2	Definitions	Yes	
§63.3	Units and Abbreviations	Yes	
§63.4	Prohibited Activities and Circumvention	Yes	
§63.5	Preconstruction Review and Notification Requirements	Yes	
§63.6(a), (b)(1)-(b)(5), (b)(7), (c)(1), (c)(2), (c)(5), (e)(1), (e)(3)(i), (e)(3)(iii)-(e)(3)(ix), (f)(2), (f)(3), (g), (i), (j)	Compliance with Standards and Maintenance Requirements	Yes	
§63.6(f)(1)	Compliance with Nonopacity Emission Standards	No	Subpart ZZZZZZ requires continuous compliance with all requirements in this subpart.
§63.6(h)(1), (h)(2), (h)(5)-(h)(9)	Compliance with Opacity and Visible Emission Limits	No	Subpart ZZZZZZ does not contain opacity or visible emission limits.
§63.6(b)(6), (c)(3), (c)(4), (d), (e)(2), (e)(3)(ii), (h)(3), (h)(5)(iv)	Reserved	No	

§63.7	Applicability and Performance Test Dates	Yes	
§63.8(a)(1), (b)(1), (f)(1)-(5), (g)	Monitoring Requirements	Yes	
§63.8(a)(2), (a)(4), (b)(2)-(3), (c), (d), (e), (f)(6), (g)	Continuous Monitoring Systems	No	Subpart ZZZZZZ does not require a flare or CPMS, COMS or CEMS.
§63.8(a)(3)	[Reserved]	No	
§63.9(a), (b)(1), (b)(2)(i)-(iii), (b)(5), (c), (d), (e), (h)(1)-(h)(3), (h)(5), (h)(6), (j)	Notification Requirements	Yes	Subpart ZZZZZZ requires submission of Notification of Compliance Status within 120 days of compliance date unless a performance test is required.
§63.9(b)(2)(iv)-(v), (b)(4), (f), (g), (i)	No		
§63.9(b)(3), (h)(4)	Reserved	No	
§63.10(a), (b)(1), (b)(2)(i)-(v), (vii), (vii)(C), (viii), (ix), (b)(3), (d)(1)-(2), (d)(4), (d)(5), (f)	Recordkeeping and Reporting Requirements	Yes	
§63.10(b)(2)(vi), (b)(2)(vii)(A)-(B), (c), (d)(3), (e)	No	Subpart ZZZZZZ does not require a CPMS, COMS, CEMS, or opacity or visible emissions limit.	
§63.10(c)(2)-(c)(4), (c)(9)	Reserved	No	
§63.11	Control Device Requirements	No	
§63.12	State Authority and Delegations	Yes	
§§63.13-63.16	Addresses, Incorporations by Reference, Availability of Information,	Yes	

	Performance Track Provisions		

Attachment #7

Manufacturer and Vendor Information

Mansell and *Associates, llc.*
P. KAY METALS
2448 E. 25th Street
Los Angelas, CA. 90058

"SuperMelt" Rotary Furnace with Swivel Base
Unit 75

Quote No. 122115

Ed Mansell
Phone: (256) 366-9325
Fax: (256) 389-9449
email: emansell@mansellandassociates.net

Mansell & Associates
P.O. Box 380
Tuscumbia, Al. 35674
www.mansellandassociates.net

MANSELL and *ASSOCIATES, llc.*
P.O. Box 380
Tuscumbia, Al. 35674

QUOTE No. 122115

Dec. 21, 2015

Phone (256) 366-9325 Fax (256) 389-9449 email:emansell@mansellandassociates.net

P. KAY METALS
2448 E. 25th Street
Los Angelas, CA. 90058
Phone (323) 585-5058

ATTN: Larry Kay
Re: Tilting Rotary "Super-Melter" with Swivel Base

Mr. Kay,

Following Proposal to Furnish a "SuperMelt" tilting rotary furnace on swivel base, with everything necessary to operate the unit. Furnace will be pre-assembled and tested prior to shipping. We are unable to melt metal but will test all functions of the furnace.

Equipped as follows:

Item No. 1:

A. Rotary Tilting Melting Furnace: Patented Design:

Unit #75 - 75 cubic ft. capacity of molten material

B. 5M BTU Natural Gas Burner System with Temp. Controls, NFPA Safety Devices. Ratio required.

C. Cone shaped Barrel. Refractory lining by Customer. Unit has a 60" door opening.

D. Barrel Mounted on Tilt Frame with three (3) Point Suspension
   1. Tail Shaft Bearing
   2. Carrier Rolls with Riding Ring on Cone

E. Heavy Duty Gear Box/Motor with 25 HP Hydraulic Motor to Provide Rotation of Barrel thru Sprockets/Chain. Variable Speed Drive from 1 to 6 RPMS

F. 25 HP Hydraulic Power unit to furnish Fluid to Two (2) Cylinders to Raise and Lower (tilt) Barrel to pour off Molten Metal and Slag into Crucible or Molds provided by Customer, also to Open/Close Charge Opening Door with Burner, and furnish rotation of barrel.

G. Control Panel pre-wired to operate all functions of Rotary Furnace

H. Smoke/Fume Collection:
A custom built round hood that completely encircles the rotary furnace to direct smoke and fumes is provided with duct connection.

I. Natural Gas Requirement: 5 PSI- 5,000 SCFH

J. Total Unit Weight: Unit #75 weighs approx. 50,000 lbs.

K. Customer to Furnish Forklift, crane and manlift to install. M&A technician in supervisory position to Provide Start-Up Instructions.

L. We will assemble in our shop at Tuscumbia, Al., and Fire Burners. We will go thru Operation Mode prior to shipping. Customer may be present if desired.

M. Control System with Furnace:

A. Major components to be supplied:

1. Control console with the following functions:
   a. Furnace raise/lower
   b. Door open/close
   c. Furnace rotation direction selection
   d. Furnace rotation speed
   e. Furnace charging machine traverse and load
   f. Furnace purge initiate
   g. Burner start/stop
   h. Hydraulic pump on/off
   i. Furnace flue temperature and overtemp controller

Summary of Items Furnished by M&A

A. Engineering, design, and drawings
B. Three (3) copies of spare parts manual
C. Fabricated steel shell, lift platforms, sub-base, and door
D. Control Systems/Burner/Gas Train
E. Hydraulic Power Unit/Cylinders
F. Motors/Starters
G. Instrumentation, panels, and control
H. Plant engineering including building layouts, elevation and details
I. Piping and wiring materials to connect controls to unit
J. Commissioning supervision, and operator training as specified
K. Field representative for five (5) days to assist in the startup of furnace
L. Template for anchor bolts for foundation for swivel base

Summary of Items Furnished by Purchaser

A. Operating tools and equipment, crucibles if needed
B. Survey fuel, labor and scrap for testing if required
C. Unloading and providing inside storage of incoming materials
D. Foundations if needed- concrete foundation for installation of swivel base
E. All electrical, gas to control panels

ROTARY FURNACE DESIGN PARAMETERS

Unit #75- 75 cu. ft. capacity

A. Working Volume of Molten Metal: 75 cubic ft.: 53,000 lb. Lead capacity

B. Working Volume with 3" freeboard

C. 5M BTU Burner - Air/Natural Gas

D. Burner Control: Thermocouple controlled, Air/Gas ratio regulated

E. Burner turns down: 10:1

F. Burner mounted hydraulic operated tilt-out door.

G. Flow resistance ring around the furnace door opening

H. Furnace door opening: 60"

I. Furnace steel shell: 1/2" thick

J. Furnace has three point suspension and is supported by two trunnion wheels on steel tyre in front, pillow block bearing at the rear, no thrust rollers to contend with.

K. Drive HP: 25 HP Variable thru Gearbox/Sprocket/Chain

L. Furnace rotation speed: 1-6 RPM infinitely variable thru rheostat manual control

M. Hydraulic tilt cylinders: Heavy duty mill type, 6" dia. x 3" rod

N. Tilt Speed: 1° per second, check valves to hold load - emergency down.

O. Hydraulic power unit: 25 HP

Tilting Rotary Furnace

EQUIPMENT DESCRIPTION

Unit No. 75 has 1/2" steel plate in the barrel. The rotary body has a 1" stiffener band underneath the solid steel tire, running on steel trunnion rollers. We use a three point loading system to carry the weight of the furnaces load. The steel tire carries approx. 50% of the entire load and a heavy steel shaft mounted on the back end of the furnace and equipped with a double timken roller bearing in a machined housing, carries 50% of the load and controls end thrust. This arrangement does away with thrust rollers.
A chain drive thru a gearbox, driven by a variable speed hi-torque electric motor provides infinite control, thru a rheostat, to determine speed and direction of rotation.
The Furnace is mounted on a platform, raised and lowered with two (2) heavy duty mill type hydraulic cylinders.
The burner is mounted on the door below the flue. The burner and flue locations provide a double pass burn of gas.

A. Furnace Construction:
Heavy steel shell, fabricated from ½"" plate on Unit. No. 75, with extra steel in critical support areas.
The entire shell is supported on solid steel tire and back shaft, sitting on steel frame with two trunnion rollers and lifted by two (2) mill type hydraulic cylinders.

B. Door Construction:
A refractory lined door fits snug to the opening of the rotary barrel. The 60" opening is actuated via a hydraulic cylinder which pivots the door out to achieve a smooth sequence. Gas is piped thru flex lines during the opening/closing. The door contains an exhaust flue in the top section, above the burner, which allows for a double pass burn of gas.

C. Charging of the Furnace:
The material is charged thru the front of the rotary barrel, either via a charge machine or bucket loader with a "sugar-scoop" attachment supplied by customer.

D. Pouring the Molten Metal/Dross/Iron/Slag:
This is achieved by tilting the Rotary Furnace to the desired elevation, begin the pouring of the molten metal from beneath the dross, and continue the tilting until the desired amount is poured off. The furnace is then tilted back a few degrees, the container of molten moved out, and a dross pan put in place. The dross/iron is poured off very quickly by raising the furnace and slowly rotating until all the dross is poured off.

E. Refractory Lining:
By Customer.

F. Electrical:
A NEMA 12 panel/MCC cabinet is provided, prewired, with motor starters, push buttons, necessary to operate every function of the furnace operation. 100 amp - 230/460/110 volts required

Pusher Type Charge Machine

Charge Machine to Load 60'' Opening in Rotary Furnace: Hydraulic "Pusher" Type:

Heavy steel frame mounted on railroad type flanged wheels, motor driven to move unit in toward furnace for charging and back out 6 ft. when charge is complete. The loading ram is 60'' diameter and has a 12 ft. stroke. Complete self-contained unit with hydraulic power unit, 15 HP, 460 V- 3 phase, electrically operated solenoid valve to push and retract ram, which extends into furnace opening 18 inches. Ram is fabricated from ½'' plate rolled to size. The 18" which protrudes into the furnace is Stainless Steel, and replaceable.

Eclipse RatioAir Burners

Model RA0300

Data sheet Edition 09.15

Version 3

Parameter		Specifications		
		Packaged Blower Nominal (50Hz and 60Hz)		
Maximum Input, Btu/h (kW)[1, 2]	**Chamber Pressure "w.c. (mbar)**	**Straight Combustor**	**Medium Velocity Combustor**	**High Velocity Combustor**
	-2.0 (-5.0)	3,960,000 (1160)	3,500,000 (1026)	3,240,000 (949)
	-1.0 (-2.5)	3,790,000 (1110)	3,360,000 (984)	3,140,000 (920)
	0.0 (0.0)	3,600,000 (1055)	3,200,000 (938)	3,050,000 (894)
	1.0 (2.5)	3,430,000 (1005)	3,050,000 (894)	2,950,000 (864)
	2.0 (5.0)	3,230,000 (946)	2,890,000 (847)	2,850,000 (835)
Minimum Input, Btu/h (kW) *For lower inputs, contact Eclipse, Inc.*		65,000 (19)	65,000 (19)	65,000 (19)
Main Gas Inlet Pressure, "w.c. (mbar)[3] *Fuel pressure at ratio regulator inlet*	Maximum	55 (137)	55 (137)	55 (137)
	Minimum	20 (50)	20 (50)	25 (62)
High Fire Visible Flame Length, inches (mm) *Measured from the outlet end of the combustor*		68 (1727)	64 (1625)	50 (1270)
Approximate Flame Velocity, ft/s (m/s) *Approximately 15% excess air at maximum input*		-	250 (75)	500 (150)
Maximum Chamber Temperature, °F (°C)	Alloy Combustor	1500 (820)	1750 (955)	1750 (955)
	Block & Holder	1900 (1040)	2800 (1540)	2800 (1540)
Flame Detection		UV scanner only		
Blower Motor Power, Hp	60 Hz	10" w.c. @ 44,000 scfh, 2 hp	10" w.c. @ 33,000 scfh, 1.5 hp	15" w.c. @ 44,000 scfh, 3 hp
	50 Hz	10" w.c. @ 33,000 scfh, 1.5 kW	10" w.c. @ 33,000 scfh, 1.5 kW	-
Weight, lbs (kg)[4]	Alloy Combustor	249 (113)		
	Block and Holder	366 (166)		
Fuels[5] *For any other mixed gas, contact Eclipse, Inc.*		Natural Gas, Propane or Butane		
Approvals		АИЗО		

[1] Maximum inputs for packaged blower versions are given for the standard combustion air blower without an inlet air filter.

[2] Blower motor service factors greater than 1.0 may be required when firing into negative chamber pressure applications. For specific application questions, contact Eclipse.

[3] For proper performance, this pressure must be kept constant across the burner operating range.

[4] All weights are approximate.

[5] See Design Guide 115 for more information about typical fuel composition and properties.

- All inputs based upon gross calorific values and standard conditions: 1 atmosphere, 70°F (21°C).
- Blower motor service factors greater than 1.0 may be required when firing into negative chamber pressure applications. For specific application questions, contact Eclipse.
- Eclipse reserves the right to change the construction and/or configuration of our products at any time without being obliged to adjust earlier supplies accordingly.
- All information is based on laboratory testing. Different chamber conditions will affect the data.

elster
Thermal Solutions

Control and Operation Curve

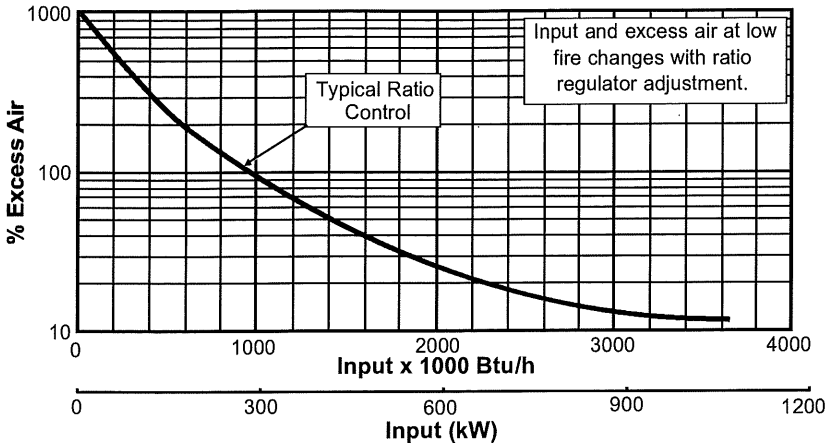

Straight Combustor Specifications

NO_X Emission (On ratio)

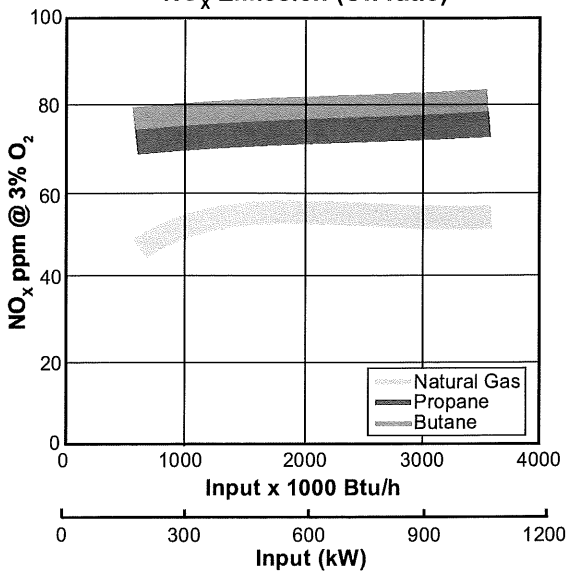

NO_X emission data is given for:

- Ambient combustion air ~70°F (21°C)
- Minimal process air velocity
- ppm volume dry at 3% O_2
- Neutral chamber pressure

Emissions from the burner are influenced by:

- Chamber conditions
- Fuel type
- Firing rate
- Ratio regulator adjustment
- Combustion air temperature

CO emission is largely influenced by chamber conditions. Contact your local Eclipse representative for an estimate of CO emission on your application.

Fuel Orifice Δp vs. Input

(Δp Measured Between Taps B and D)

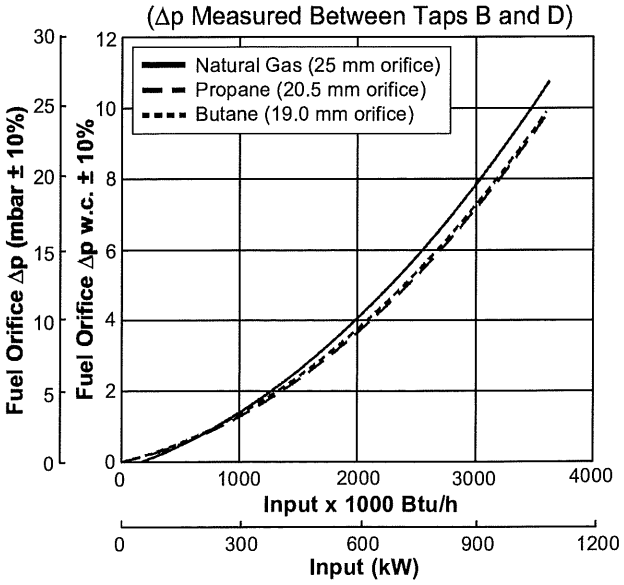

Air Δp vs. Input

(Δp Measured Between Tap C and the Chamber with the Burner Firing)

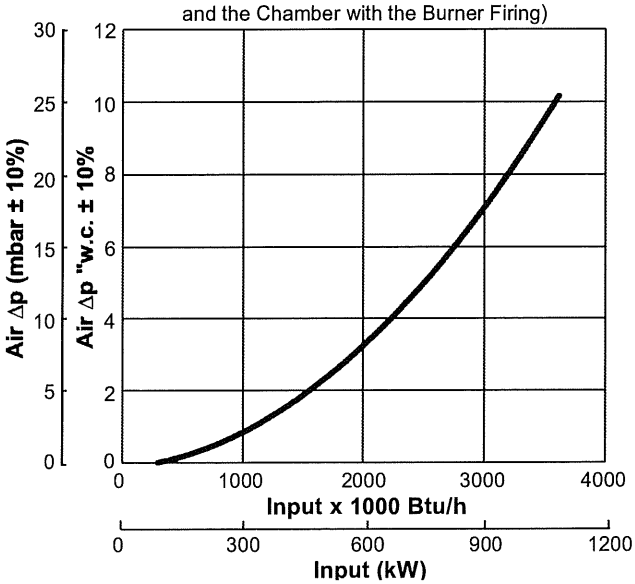

Medium Velocity Combustor Specifications

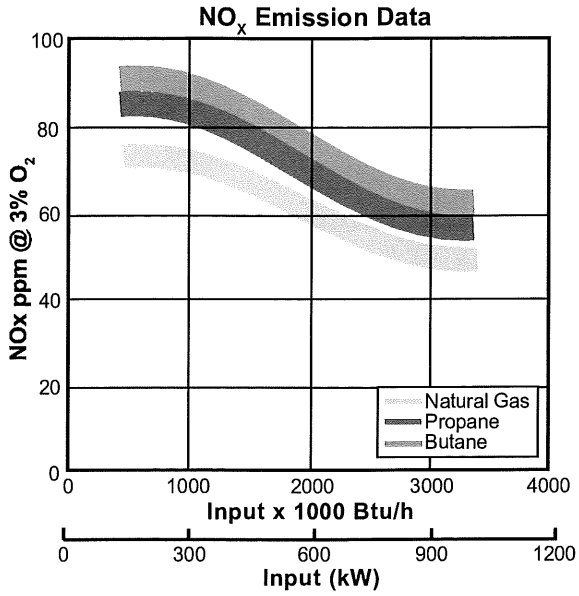

NO_x emission data is given for:

- Ambient combustion air ~70°F (21°C)
- Minimal process air velocity
- ppm volume dry at 3% O_2
- Neutral chamber pressure

Emissions from the burner are influenced by:

- Chamber conditions
- Fuel type
- Firing rate
- Ratio regulator adjustment
- Combustion air temperature

CO emission is largely influenced by chamber conditions. Contact your local Eclipse representative for an estimate of CO emission on your application.

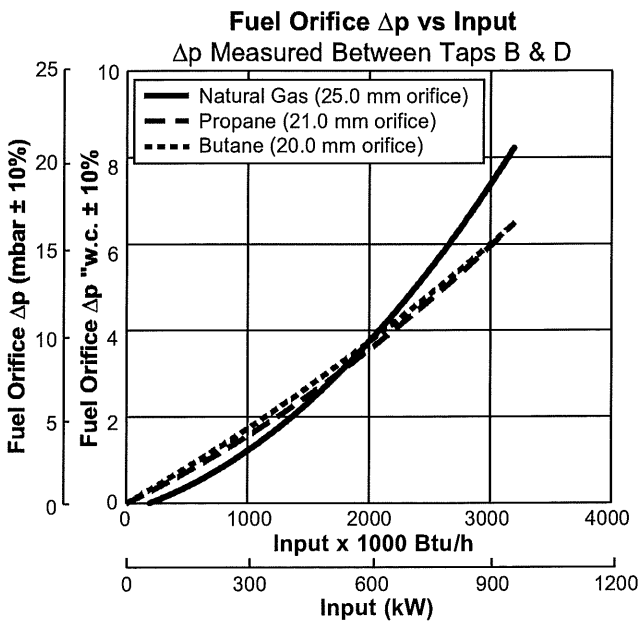

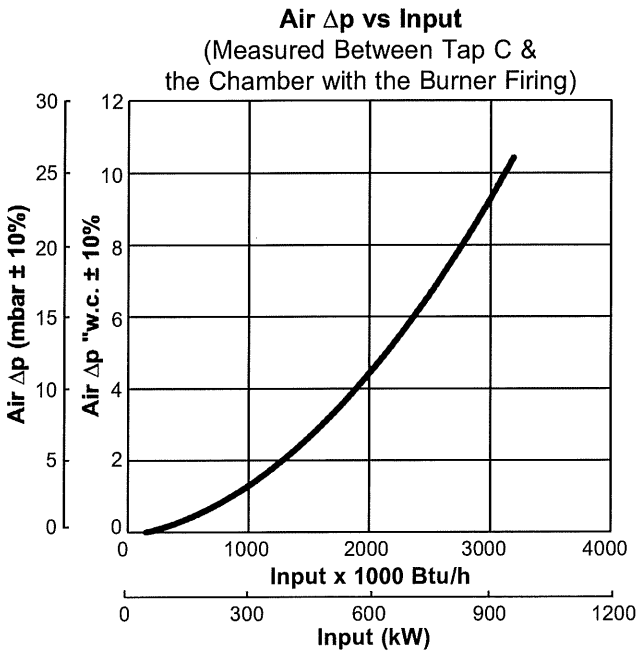

High Velocity Combustor Specifications

NO_x Emission Data

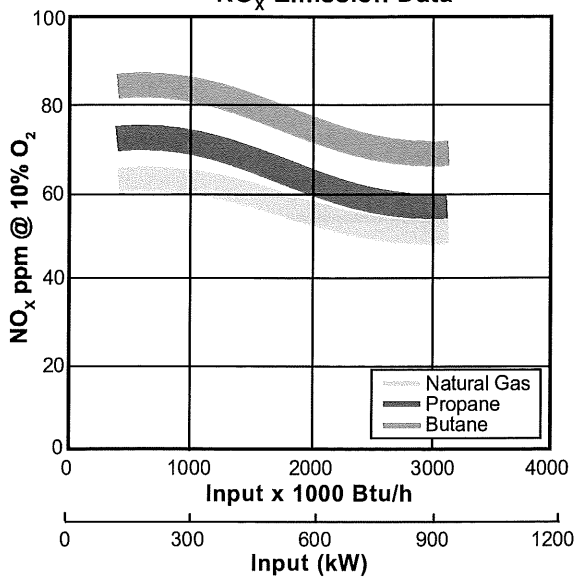

NO_x emission data is given for:

- Ambient combustion air ~70°F (21°C)
- Minimal process air velocity
- ppm volume dry at 3% O_2
- Neutral chamber pressure

Emissions from the burner are influenced by:

- Chamber conditions
- Fuel type
- Firing rate
- Ratio regulator adjustment
- Combustion air temperature

CO emission is largely influenced by chamber conditions. Contact your local Eclipse representative for an estimate of CO emission on your application.

Fuel Orifice Δp vs. Input

Δp Measured Between Taps B & D

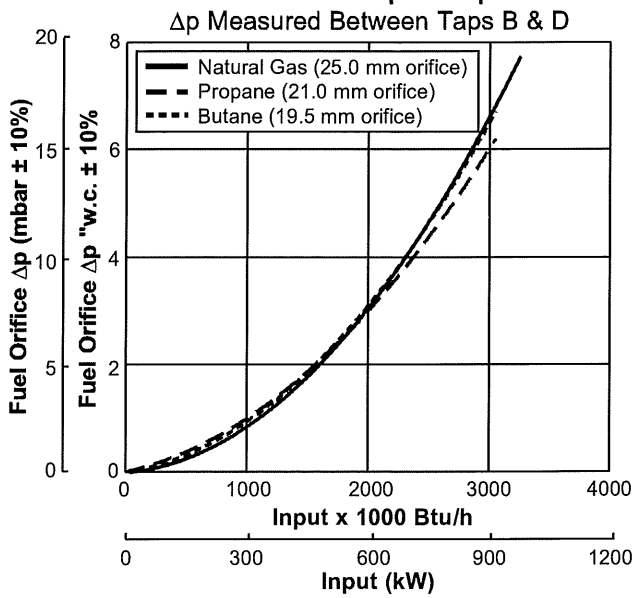

Air Δp vs. Input

(Measured Between Tap C & the Chamber with the Burner Firing)

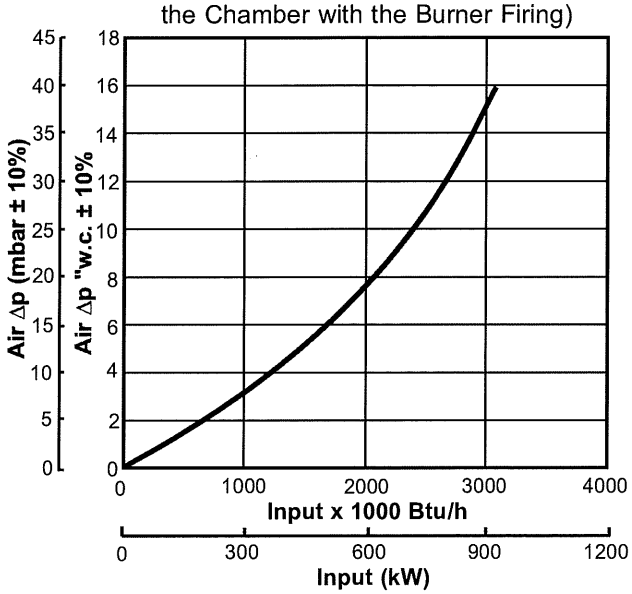

Dimensions and Specifications

Dimensions in mm (inches)

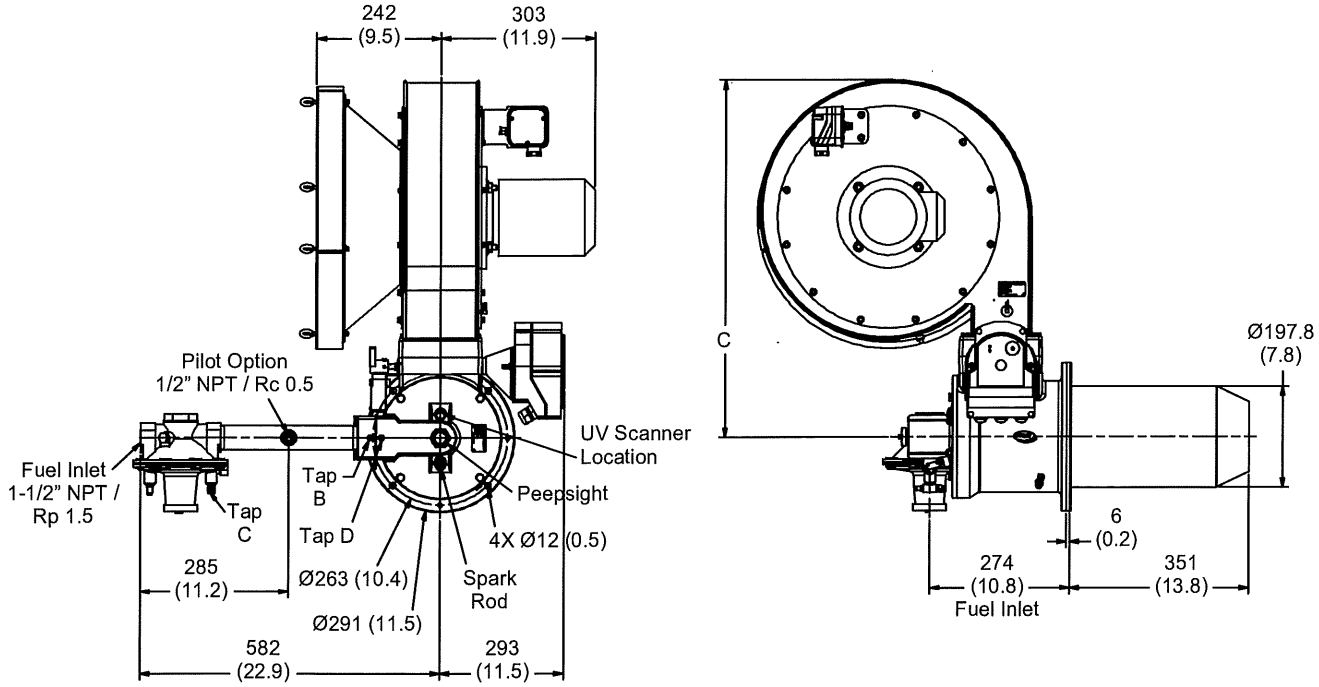

Blower	C
60 Hz (10" w.c.)	700 (27.6)
60 Hz (15" w.c.)	700 (27.6)
50 Hz (10" w.c.)	663 (26.1)

Burner Configurations

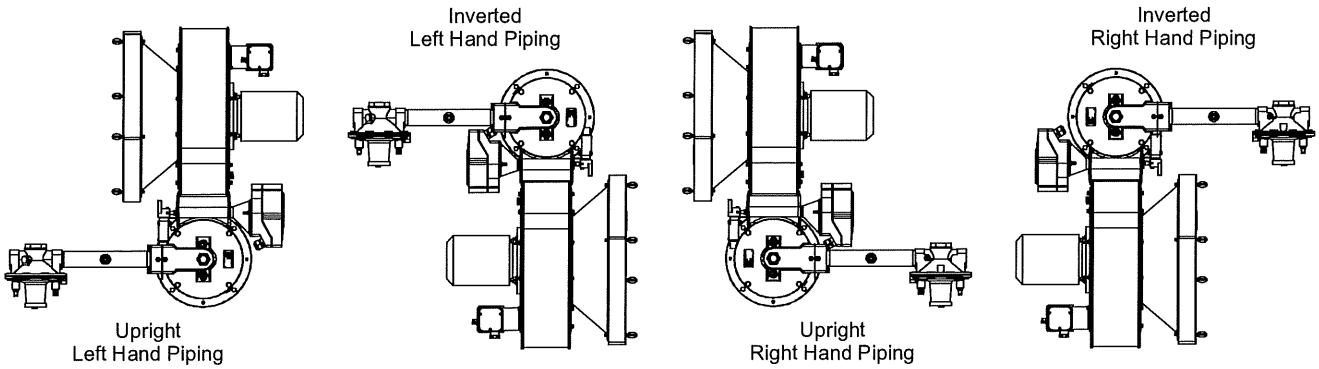

Even though the blower motor is on the "left" side of the inverted units, it is still a "right hand" motor in relationship to the blower assembly.

Combustor Options

Straight Alloy Combustor

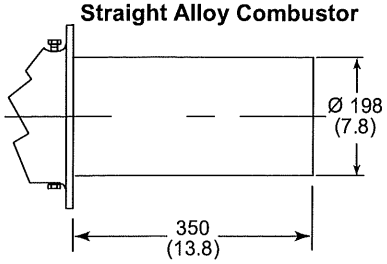

Medium & High Velocity Alloy Combustor

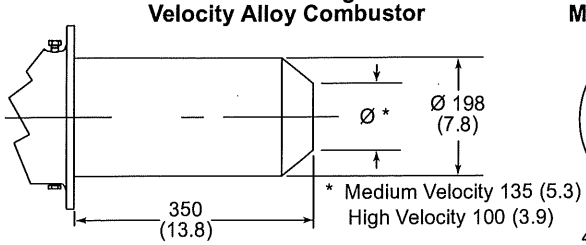

Mounting Pattern

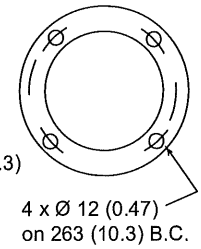

Block & Holder

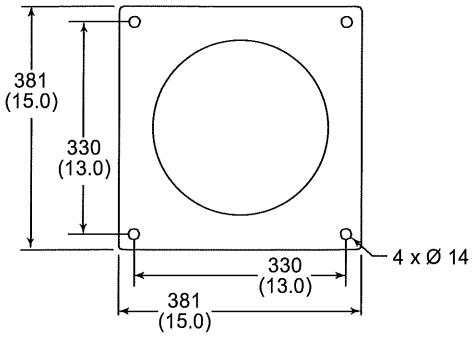

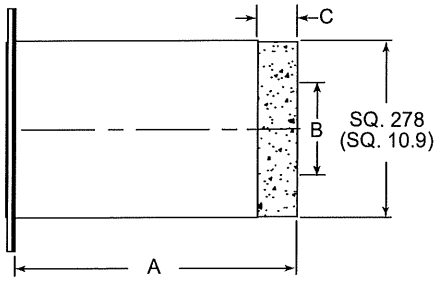

Block & Holder Option	Dimensions mm (inches)		
	A	B	C
Straight	344 (13.5)	188 (7.4)	44 (1.7)
Medium Velocity	350 (13.8)	135 (5.3)	50 (2.0)
High Velocity	350 (13.8)	100 (3.9)	50 (2.0)

Burner Configurations

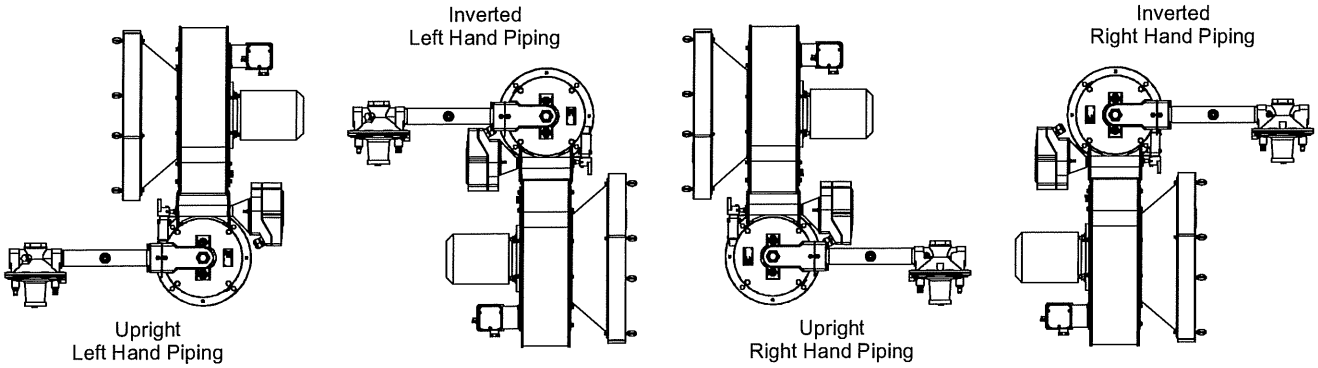

Even though the blower motor is on the "left" side of the inverted units, it is still a "right hand" motor in relationship to the blower assembly.

Eclipse RatioAir Burners

Model RA0500

Data sheet Edition 09.15

Version 3

Parameter		Specifications		
		Packaged Blower Nominal (50Hz and 60Hz)		
Maximum Input, Btu/h (kW)[1, 2]	**Chamber Pressure "w.c. (mbar)**	**Straight Combustor**	**Medium Velocity Combustor**	**High Velocity Combustor**
	-2.0 (-5.0)	6,160,000 (1805)	5,796,000 (1698)	5,440,000 (1594)
	-1.0 (-2.5)	5,900,000 (1729)	5,563,000 (1630)	5,288,000 (1549)
	0.0 (0.0)	5,500,000 (1612)	5,300,000 (1553)	5,100,000 (1494)
	1.0 (2.5)	5,240,000 (1535)	5,065,000 (1484)	4,970,000 (1456)
	2.0 (5.0)	5,030,000 (1474)	4,797,000 (1406)	4,804,000 (1408)
Minimum Input, Btu/h (kW) *For lower inputs, contact Eclipse, Inc.*		100,000 (29)	100,000 (29)	100,000 (29)
Main Gas Inlet Pressure, "w.c. (mbar)[3] *Fuel pressure at ratio regulator inlet*	Maximum	55 (137)	55 (137)	55 (137)
	Minimum	20 (50)	20 (50)	25 (62)
High Fire Visible Flame Length, inches (mm) *Measured from the outlet end of the combustor*		100 (2540)	97 (2464)	75 (1905)
Approximate Flame Velocity, ft/s (m/s) *Approximately 15% excess air at maximum input*		-	250 (75)	500 (150)
Maximum Chamber Temperature, °F (°C)	Alloy Combustor	1500 (820)	1750 (955)	1750 (955)
	Block & Holder	1900 (1040)	2800 (1540)	2800 (1540)
Flame Detection		UV scanner only		
Blower Motor Power, Hp	60 Hz	10" w.c. @ 66,000 scfh, 3 hp	10" w.c. @ 66,000 scfh, 3 hp	15" w.c. @ 66,000 scfh, 5 hp
	50 Hz	10" w.c. @ 66,000 scfh, 2.2 kW	10" w.c. @ 66,000 scfh, 2.2 kW	15" w.c. @ 66,000 scfh, 4 kW
Weight, lbs (kg)[4]	Alloy Combustor	509 (231)		
	Block and Holder	686 (311)		
Fuels[5] *For any other mixed gas, contact Eclipse, Inc.*		Natural Gas, Propane or Butane		
Approvals		АИ30		

[1] Maximum inputs for packaged blower versions are given for the standard combustion air blower without an inlet air filter.

[2] Blower motor service factors greater than 1.0 may be required when firing into negative chamber pressure applications. For specific application questions, contact Eclipse.

[3] For proper performance, this pressure must be kept constant across the burner operating range.

[4] All weights are approximate.

[5] See Design Guide 115 for more information about typical fuel composition and properties.

- All inputs based upon gross calorific values and standard conditions: 1 atmosphere, 70°F (21°C).
- Blower motor service factors greater than 1.0 may be required when firing into negative chamber pressure applications. For specific application questions, contact Eclipse.
- Eclipse reserves the right to change the construction and/or configuration of our products at any time without being obliged to adjust earlier supplies accordingly.
- All information is based on laboratory testing. Different chamber conditions will affect the data.

elster
Thermal Solutions

Control and Operation Curve

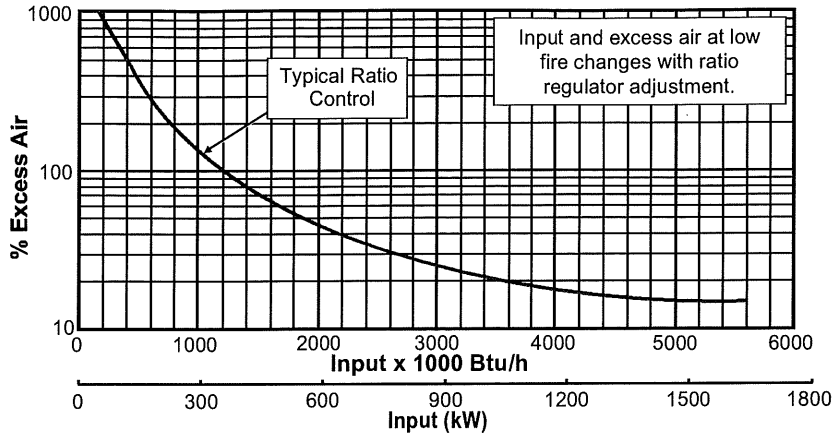

Straight Combustor Specifications

NO_x Emission (On ratio)

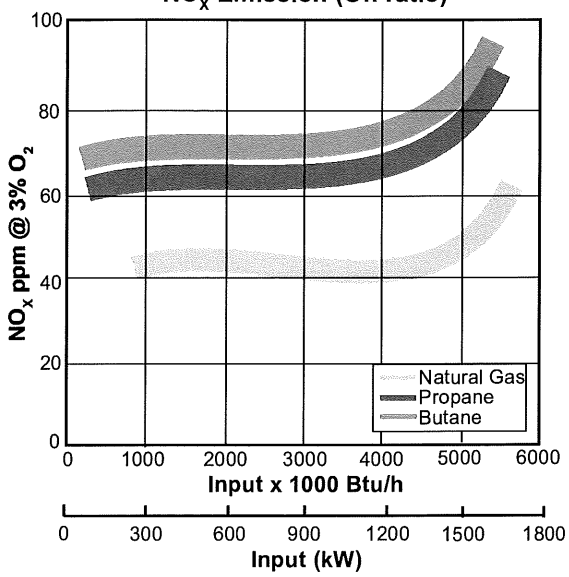

NO_x emission data is given for:

- Ambient combustion air ~70°F (21°C)
- Minimal process air velocity
- ppm volume dry at 3% O_2
- Neutral chamber pressure

Emissions from the burner are influenced by:

- Chamber conditions
- Fuel type
- Firing rate
- Ratio regulator adjustment
- Combustion air temperature

CO emission is largely influenced by chamber conditions. Contact your local Eclipse representative for an estimate of CO emission on your application.

Fuel Orifice Δp vs. Input

(Δp Measured Between Taps B and D)

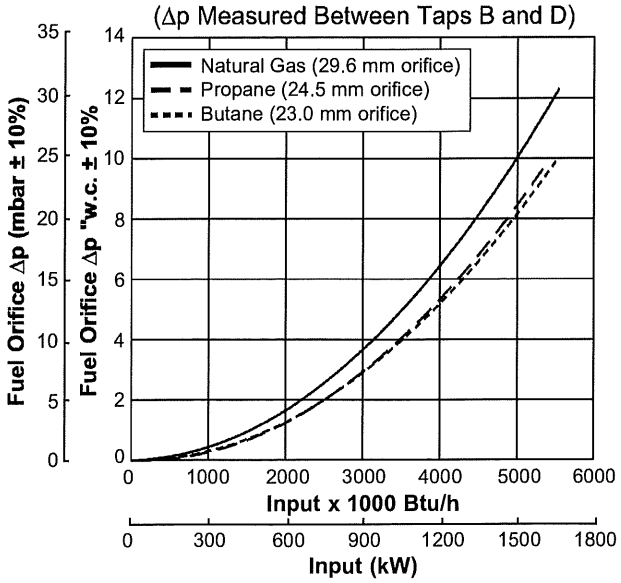

Air Δp vs. Input

(Δp Measured Between Tap C and the Chamber with the Burner Firing)

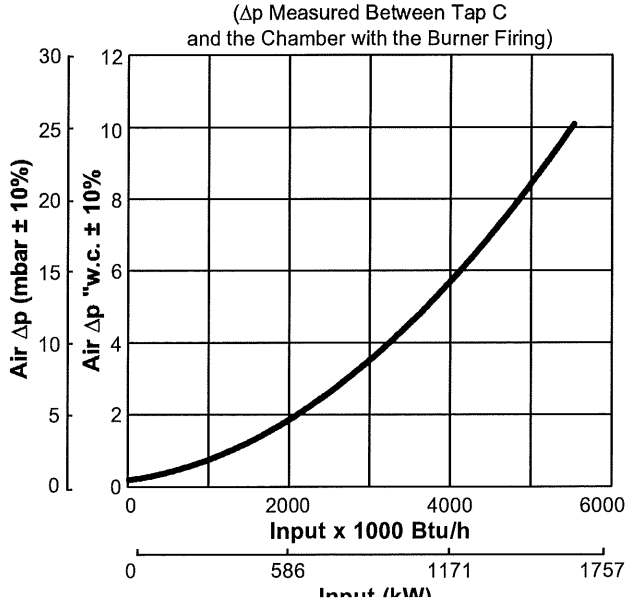

Medium Velocity Combustor Specifications

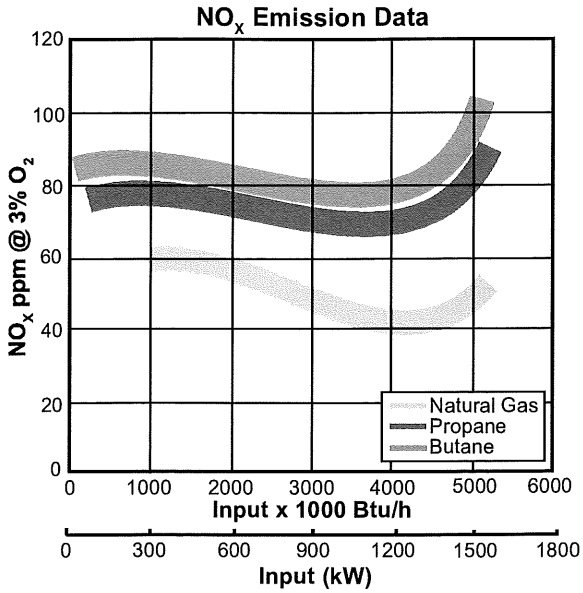

NO_x emission data is given for:

- Ambient combustion air ~70°F (21°C)
- Minimal process air velocity
- ppm volume dry at 3% O_2
- Neutral chamber pressure

Emissions from the burner are influenced by:

- Chamber conditions
- Fuel type
- Firing rate
- Ratio regulator adjustment
- Combustion air temperature

CO emission is largely influenced by chamber conditions. Contact your local Eclipse representative for an estimate of CO emission on your application.

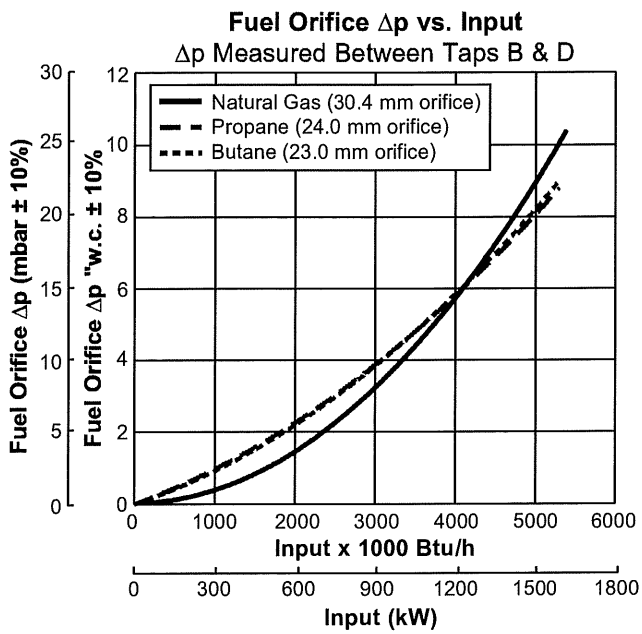

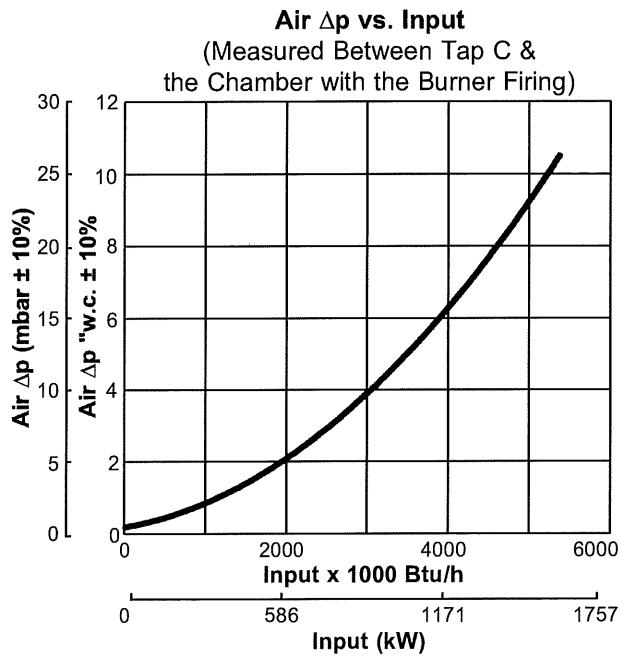

High Velocity Combustor Specifications

NO_x Emission Data

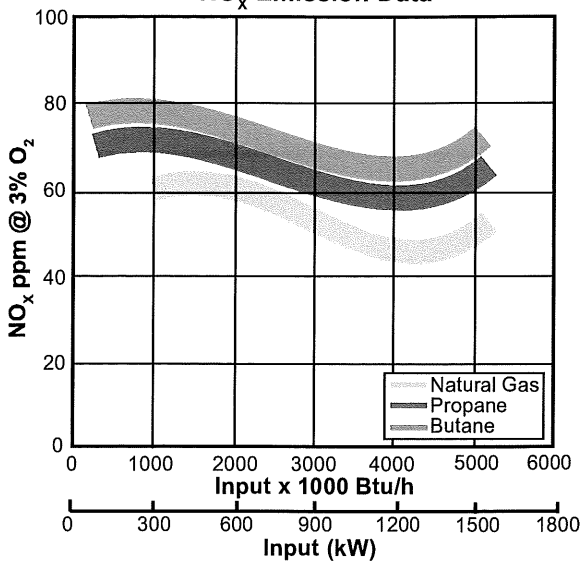

NO_x emission data is given for:

- Ambient combustion air ~70°F (21°C)
- Minimal process air velocity
- ppm volume dry at 3% O_2
- Neutral chamber pressure

Emissions from the burner are influenced by:

- Chamber conditions
- Fuel type
- Firing rate
- Ratio regulator adjustment
- Combustion air temperature

CO emission is largely influenced by chamber conditions. Contact your local Eclipse representative for an estimate of CO emission on your application.

Fuel Orifice Δp vs. Input

Δp Measured Between Taps B & D

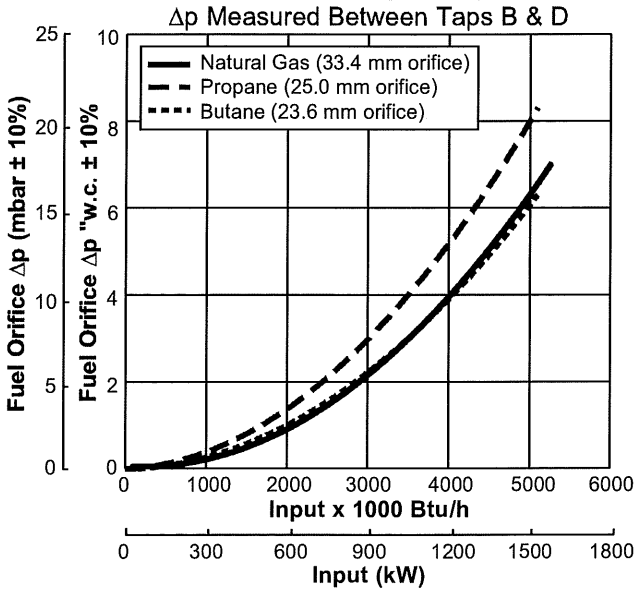

Air Δp vs. Input

(Measured Between Tap C & the Chamber with the Burner Firing)

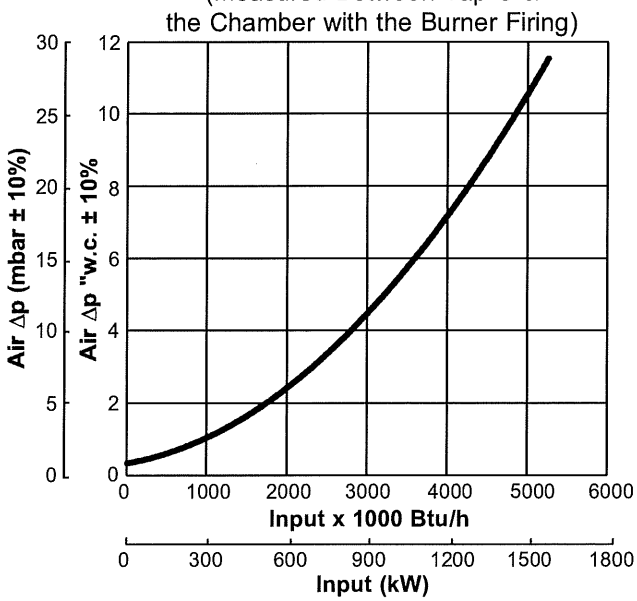

Dimensions and Specifications

Dimensions in mm (inches)

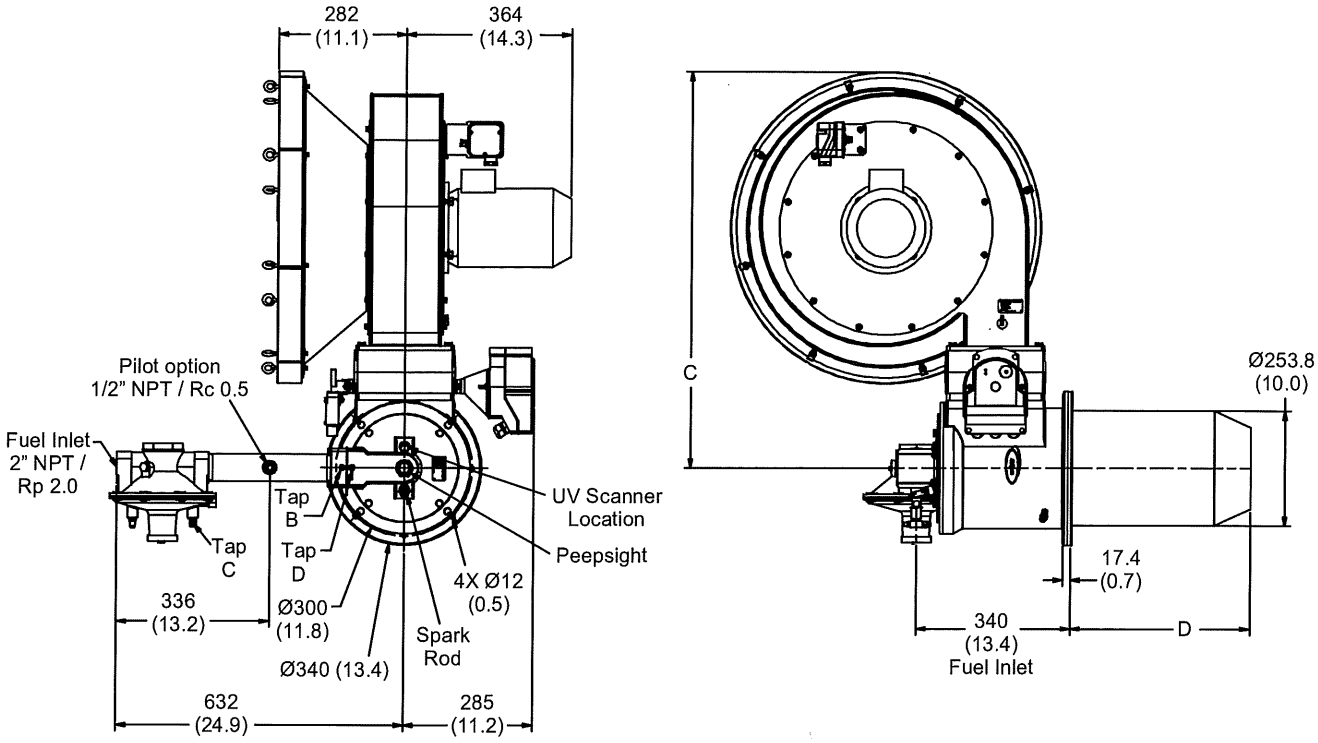

Blower	C
60 Hz (10" w.c.)	833 (32.8)
60 Hz (15" w.c.)	873 (34.4)
50 Hz (10" w.c.)	873 (34.4)

Combustor Type	D
Straight Alloy Tube	432 (17.0)
Medium Velocity Alloy Tube	394 (15.5)
High Velocity Alloy Tube	394 (15.5)

Combustor Options

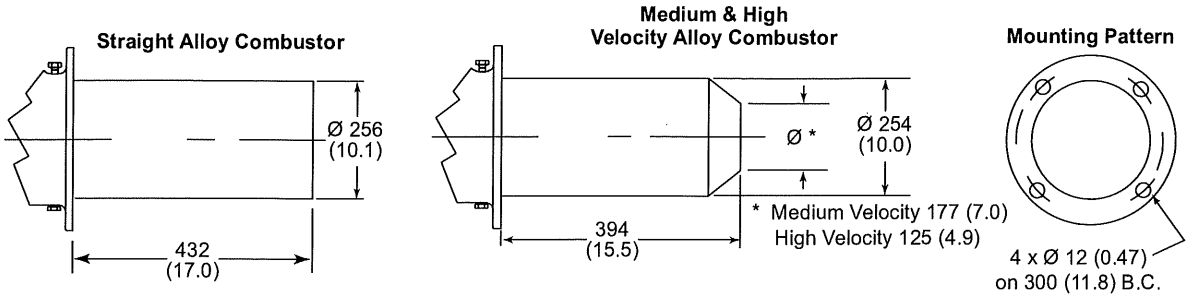

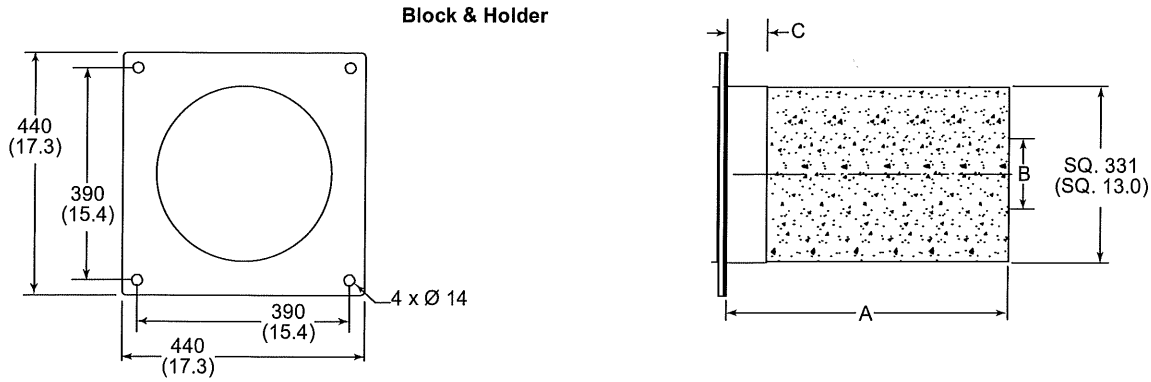

Block & Holder Option	Dimensions mm (inches)		
	A	B	C
Straight	342 (13.5)	249 (9.8)	317 (12.5)
Medium Velocity	394 (15.5)	177 (7.0)	50 (2.0)
High Velocity	394 (15.5)	125 (4.9)	50 (2.0)

Burner Configurations

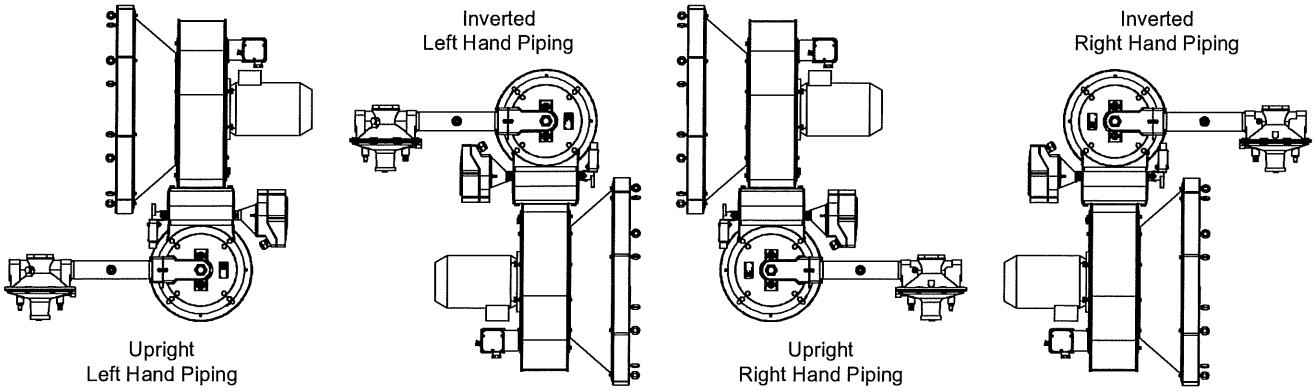

Even though the blower motor is on the "left" side of the inverted units, it is still a "right hand" motor in relationship to the blower assembly.

Datasheet 115-2
6/9/2012

Eclipse RatioAir Burners

Model RA0200

Version 2

Parameter		Specifications		
		Packaged Blower Nominal (50Hz and 60Hz)		
Maximum Input, Btu/h (kW)[1, 2]	**Chamber Pressure "w.c. (mbar)**	**Straight Combustor**	**Medium Velocity Combustor**	**High Velocity Combustor**
	-2.0 (-5.0)	2,540,000 (744)	2,350,000 (689)	2,430,000 (712)
	-1.0 (-2.5)	2,405,000 (705)	2,200,000 (645)	2,350,000 (689)
	0.0 (0.0)	2,260,000 (662)	2,110,000 (618)	2,270,000 (665)
	1.0 (2.5)	2,150,000 (630)	2,000,000 (586)	2,185,000 (640)
	2.0 (5.0)	1,940,000 (568)	1,850,000 (542)	2,095,000 (614)
Minimum Input, Btu/h (kW) *Lower inputs may be achieved. Contact factory.*		40,000 (12)	40,000 (12)	40,000 (12)
Main Gas Inlet Pressure, "w.c. (mbar)[3] *Fuel pressure at ratio regulator inlet.*	Maximum	55 (137)	55 (137)	55 (137)
	Minimum	15 (37)	15 (37)	20 (50)
High Fire Flame Length, inches (mm) *Measured from the outlet end of the combustor.*		54 (1370)	36 (915)	27 (685)
Approximate Flame Velocity, ft/s (m/s) *Approximately 15% excess air at maximum input.*		-	250 (75)	500 (150)
Maximum Application Temperature, °F (°C)	Alloy Combustor	1500 (820)	1950 (1070)	1950 (1070)
	SiC Combustor	1900 (1040)	2500 (1370)	2500 (1370)
	Block & Holder	-	2800 (1540)	2800 (1540)
Flame Detection		UV scanner available for all combustors. Flame rod available for alloy or SiC combustors with left hand piping only (270° CW from air inlet).		
Blower Motor Power, Hp	60 Hz	10" w.c. @ 22,000 scfh, 1 hp	10" w.c. @ 22,000 scfh, 1 hp	15" w.c. @ 22,000 scfh, 2 hp
	50 Hz	10" w.c. @ 22,000 scfh, 0.75 kW	10" w.c. @ 22,000 scfh, 0.75 kW	-
Weight, lbs (kg)[5]	Alloy Combustor	170 (77)		
	Block and Holder	236 (107)		
Fuels *For any other mixed gas, contact Eclipse, Inc.*		Natural Gas, Propane or Butane[4]		
Approvals		АИ30		

[1] Maximum inputs for packaged blower versions are given for the standard combustion air blower without an inlet air filter.

[2] Blower motor service factors greater than 1.0 may be required when firing into negative chamber pressure applications. For specific application questions, contact Eclipse.

[3] For proper performance, this pressure must be kept constant across the burner operating range.

[4] See Design Guide 111 for more information about typical fuel composition and properties.

[5] All weights are approximate.

- All inputs based upon gross calorific values and standard conditions: 1 atmosphere, 70°F (21°C).
- Blower motor service factors greater than 1.0 may be required when firing into negative chamber pressure applications. For specific application questions, contact Eclipse.
- Eclipse reserves the right to change the construction and/or configuration of our products at any time without being obliged to adjust earlier supplies accordingly.
- All information is based on laboratory testing. Different chamber conditions will affect the data.

ECLIPSE®
Innovative Thermal Solutions

Control Zone

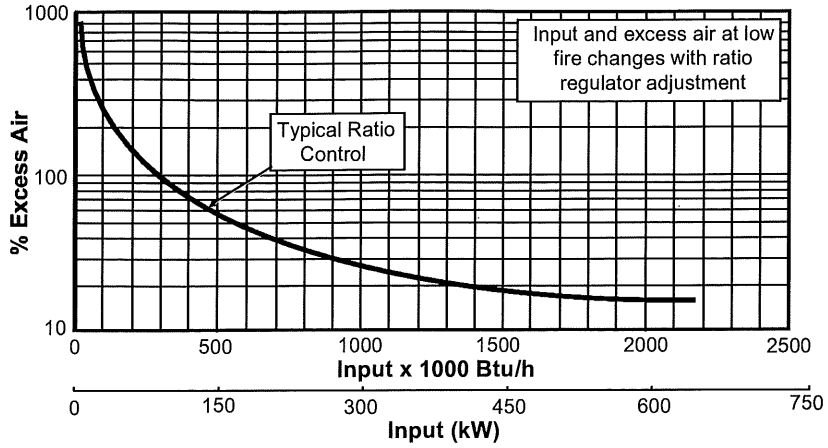

Straight Combustor Specifications

NO_x Emission Data

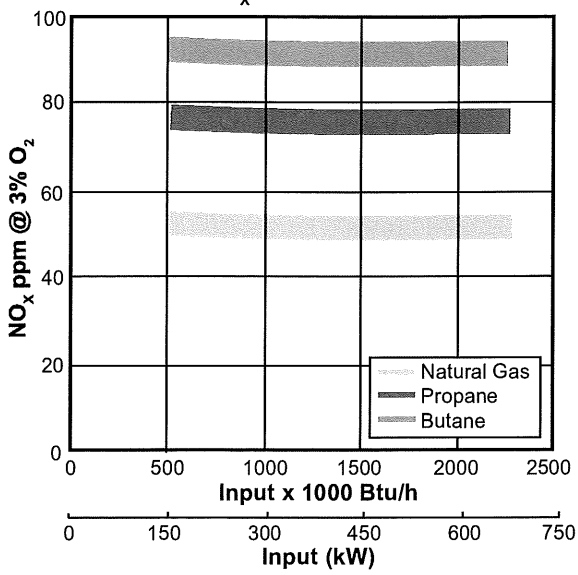

NO_x emission data is given for:

- Ambient combustion air ~70°F (21°C)
- Minimal process air velocity
- ppm volume dry at 3% O_2
- Neutral chamber pressure

Emissions from the burner are influenced by:

- Chamber conditions
- Fuel type
- Firing rate
- Ratio regulator adjustment
- Combustion air temperature

CO emission is largely influenced by chamber conditions. Contact your local Eclipse representative for an estimate of CO emission on your application.

Fuel Orifice Δp vs. Input

Δp Measured Between Taps B & D

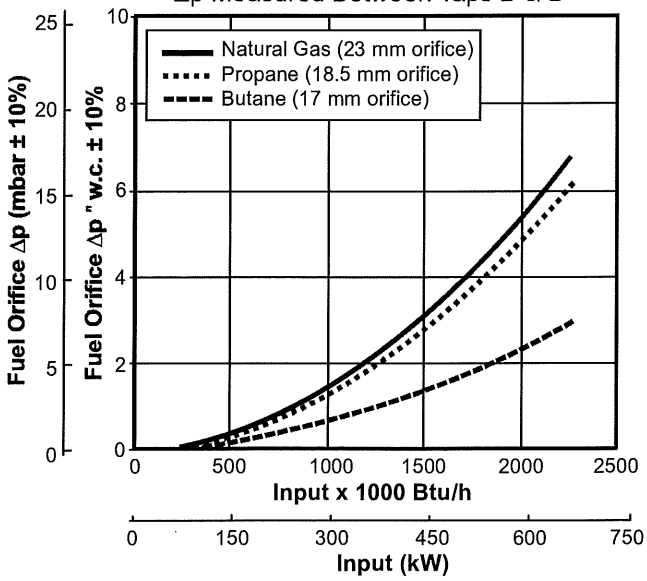

Air Δp vs. Input

(Measured Between Tap C & the Chamber with the Burner Firing)

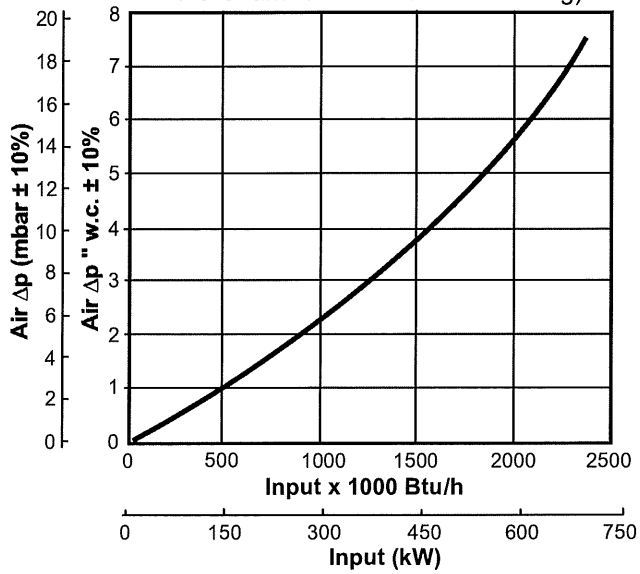

Medium Velocity Combustor Specifications

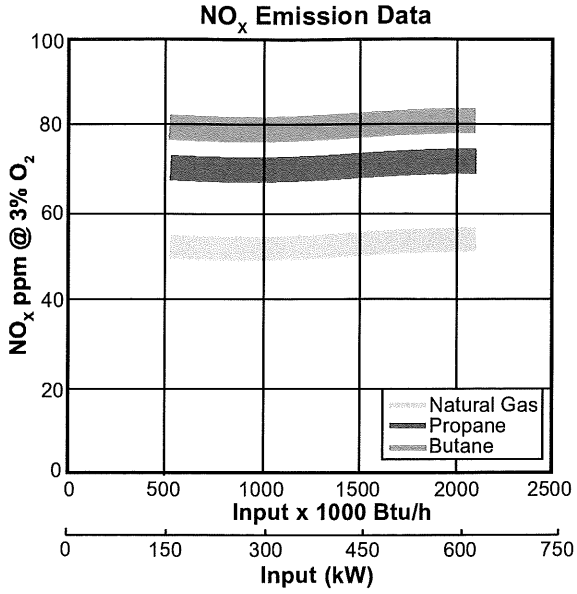

NO_X emission data is given for:

- Ambient combustion air ~70°F (21°C)
- Minimal process air velocity
- ppm volume dry at 3% O_2
- Neutral chamber pressure

Emissions from the burner are influenced by:

- Chamber conditions
- Fuel type
- Firing rate
- Ratio regulator adjustment
- Combustion air temperature

CO emission is largely influenced by chamber conditions. Contact your local Eclipse representative for an estimate of CO emission on your application.

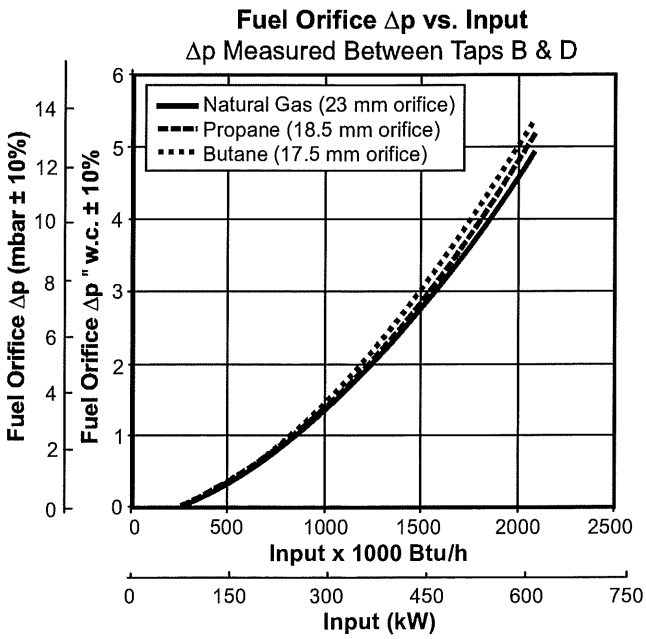

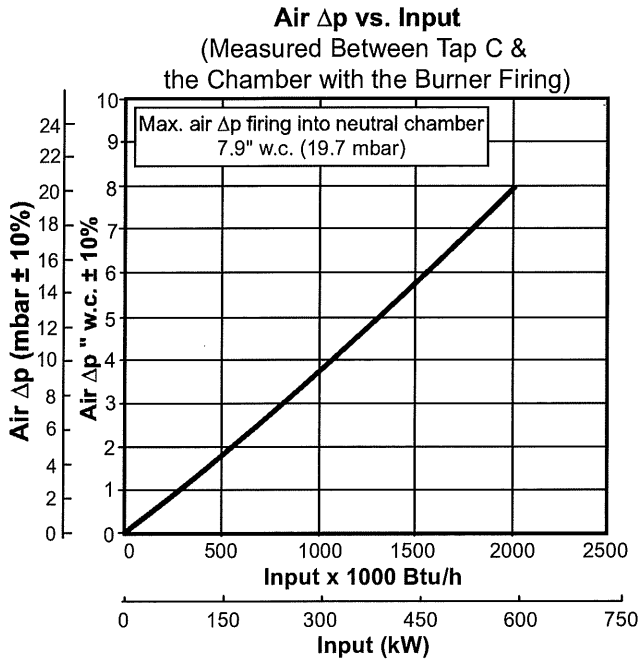

High Velocity Combustor Specifications

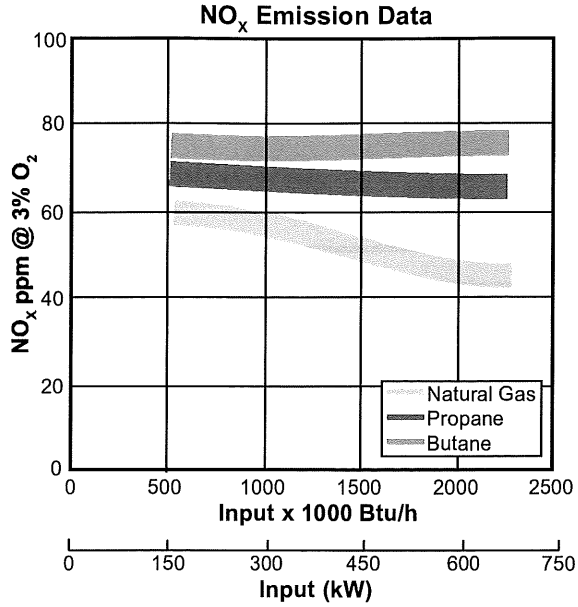

NO_x emission data is given for:

- Ambient combustion air ~70°F (21°C)
- Minimal process air velocity
- ppm volume dry at 3% O_2
- Neutral chamber pressure

Emissions from the burner are influenced by:

- Chamber conditions
- Fuel type
- Firing rate
- Ratio regulator adjustment
- Combustion air temperature

CO emission is largely influenced by chamber conditions. Contact your local Eclipse representative for an estimate of CO emission on your application.

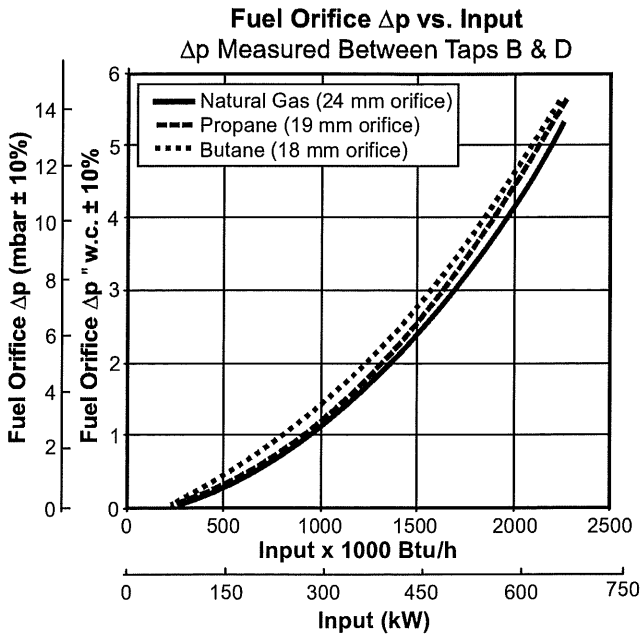

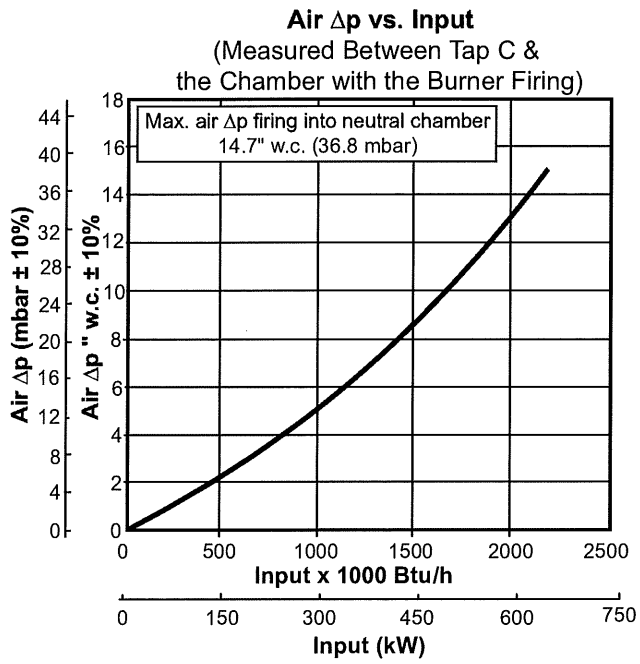

Dimensions and Specifications

Dimensions in mm (inches)

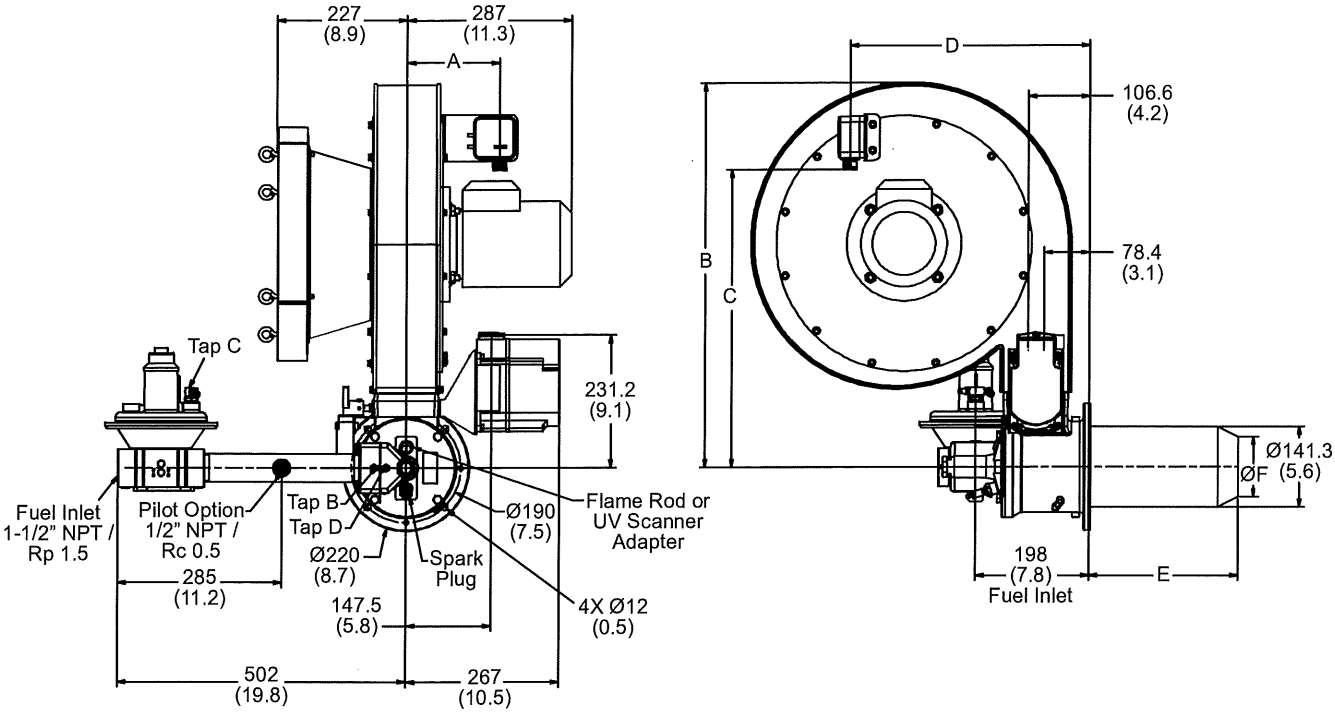

	Dimensions mm (inches)			
	A	B	C	D
60 Hz Blower	161 (6.3)	670 (26.4)	520 (20.5)	418 (16.5)
	161 (6.3)	670 (26.4)	520 (20.5)	418 (16.5)
50 Hz Blower	161 (6.3)	575 (22.6)	431 (16.7)	368 (14.5)

Combustor Type	Dimensions mm (inches)	
	E	F
Straight Alloy Tube	330 (13.0)	137 (5.4)
Straight Silicon Carbide Tube	330 (13.0)	136 (5.4)
Medium Velocity Alloy Tube	260 (10.2)	105 (4.1)
Medium Velocity Silicon Carbide Tube	270 (10.6)	105 (4.1)
High Velocity Alloy Tube	260 (10.2)	85 (3.3)
High Velocity Silicon Carbide Tube	270 (10.6)	85 (3.3)

Burner Configuration

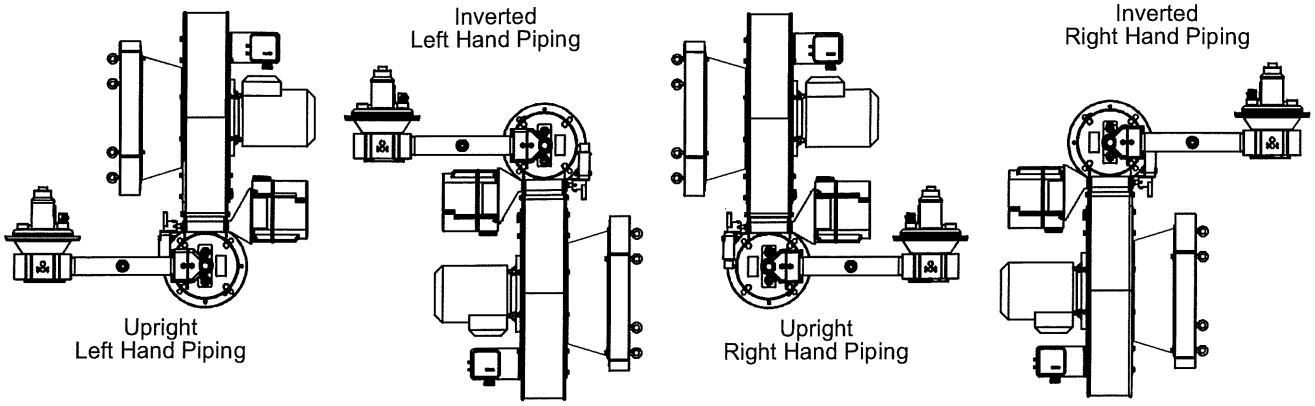

Combustor Options

Straight Alloy Combustor

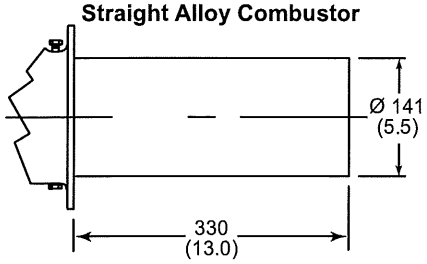

Medium & High Velocity Alloy Combustor

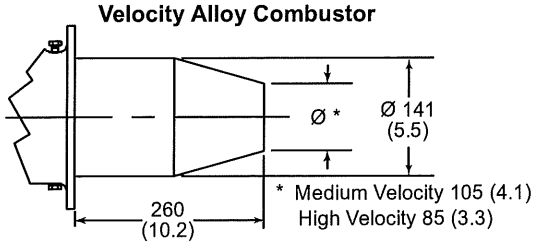

Mounting Pattern

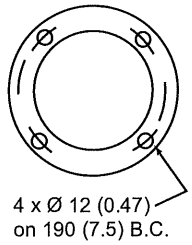

Straight SiC Combustor

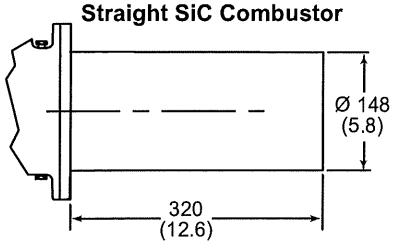

Medium & High Velocity SiC Combustor

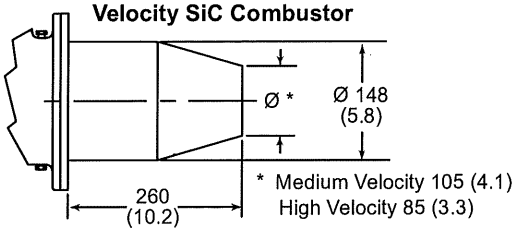

Mounting Pattern

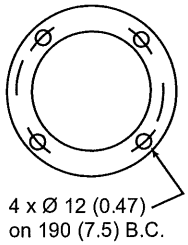

Block & Holder

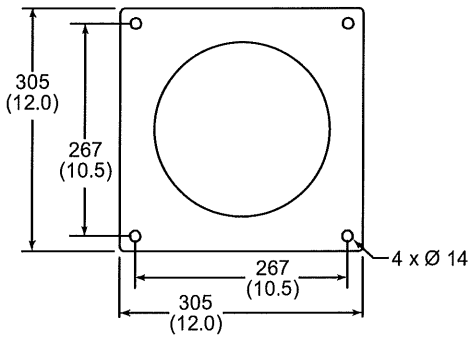

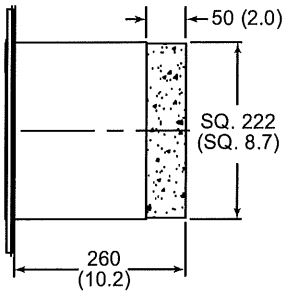

ECLIPSE®
Innovative Thermal Solutions
www.eclipsenet.com

Datasheet 115-2, 6/9/2012

Eclipse RatioAir Burners

Model RA0100

Data sheet Edition 09.15

Version 3

Parameter		Specifications		
		Packaged Blower Nominal (50Hz and 60Hz)		
Maximum Input, Btu/h (kW)[1, 2]	**Chamber Pressure "w.c. (mbar)**	**Straight Combustor**	**Medium Velocity Combustor**	**High Velocity Combustor**
	-2.0 (-5.0)	1,311,000 (384)	1,052,000 (308)	977,000 (286)
	-1.0 (-2.5)	1,216,000 (356)	982,000 (288)	935,000 (274)
	0.0 (0.0)	1,113,000 (326)	907,000 (266)	892,000 (261)
	1.0 (2.5)	1,000,000 (293)	825,000 (242)	846,000 (248)
	2.0 (5.0)	871,000 (255)	734,000 (215)	798,000 (234)
Minimum Input, Btu/h (kW) *For lower inputs, contact Eclipse, Inc.*		30,000 (8.8)	30,000 (8.8)	30,000 (8.8)
Main Gas Inlet Pressure, "w.c. (mbar)[3] *Fuel pressure at ratio regulator inlet*	Maximum	20 (50)	20 (50)	27 (67)
	Minimum	15 (37)	15 (37)	15 (37)
High Fire Visible Flame Length, inches (mm) *Measured from the outlet end of the combustor*		45 (1143)	38 (965)	33 (838)
Approximate Flame Velocity, ft/s (m/s) *Approximately 15% excess air at maximum input*		-	250 (75)	500 (150)
Maximum Chamber Temperature, °F (°C)	Alloy Combustor	1500 (820)	1750 (955)	1750 (955)
	SiC Combustor	1900 (1040)	2500 (1370)	2500 (1370)
	Block & Holder	-	2800 (1540)	2800 (1540)
Flame Detection		Flame rod or UV scanner available for all combustors*		
Blower Motor Power, Hp	60 Hz	6" w.c. @ 16,500 scfh, 1/2 hp	6" w.c. @ 16,500 scfh, 1/2 hp	10" w.c. @ 22,000 scfh, 1 hp
	50 Hz	4.2" w.c. @ 13,700 scfh, 0.37 kW	6" w.c. @ 16,500 scfh, 0.37 kW	10" w.c. @ 22,000 scfh, 0.75 kW
Weight, lbs (kg)[4]	Alloy Combustor	170 (77)		
	Block and Holder	231 (105)		
Fuels[5] *For any other mixed gas, contact Eclipse, Inc.*		Natural Gas, Propane or Butane		
Approvals		АИ30		

* Flamerod cannot be selected if gas is rotated 90° clockwise from air inlet.

[1] Maximum inputs for packaged blower versions are given for the standard combustion air blower without an inlet air filter.

[2] Blower motor service factors greater than 1.0 may be required when firing into negative chamber pressure applications. For specific application questions, contact Eclipse.

[3] For proper performance, this pressure must be kept constant across the burner operating range.

[4] All weights are approximate.

[5] See Design Guide 115 for more information about typical fuel composition and properties.

- All inputs based upon gross calorific values and standard conditions: 1 atmosphere, 70°F (21°C).
- Blower motor service factors greater than 1.0 may be required when firing into negative chamber pressure applications. For specific application questions, contact Eclipse.
- Eclipse reserves the right to change the construction and/or configuration of our products at any time without being obliged to adjust earlier supplies accordingly.
- All information is based on laboratory testing. Different chamber conditions will affect the data.

elster
Thermal Solutions

Control and Operation Curve

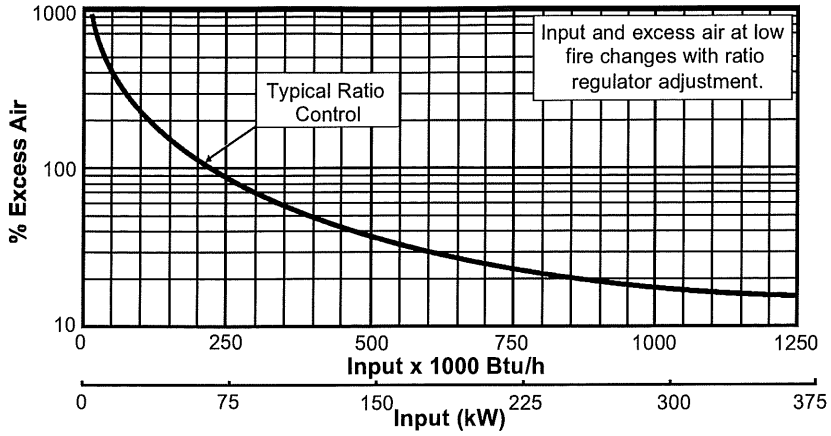

Straight Combustor Specifications

NO_x Emission (On ratio)

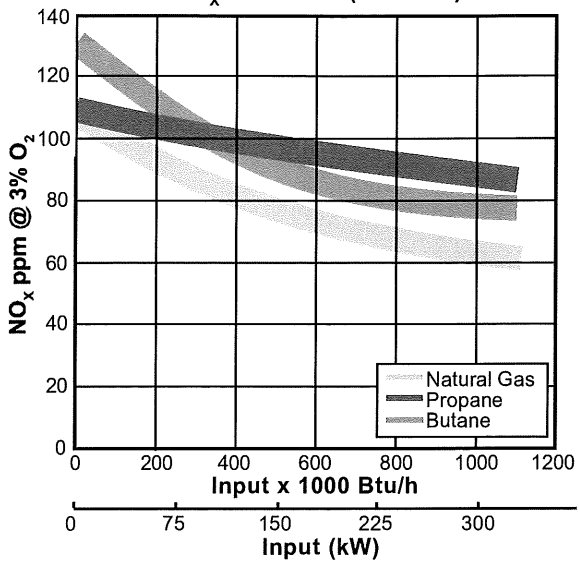

NO_x emission data is given for:

- Ambient combustion air ~70°F (21°C)
- Minimal process air velocity
- ppm volume dry at 3% O_2
- Neutral chamber pressure

Emissions from the burner are influenced by:

- Chamber conditions
- Fuel type
- Firing rate
- Ratio regulator adjustment
- Combustion air temperature

CO emission is largely influenced by chamber conditions. Contact your local Eclipse representative for an estimate of CO emission on your application.

Fuel Orifice Δp vs. Input

(Δp Measured Between Taps B and D)

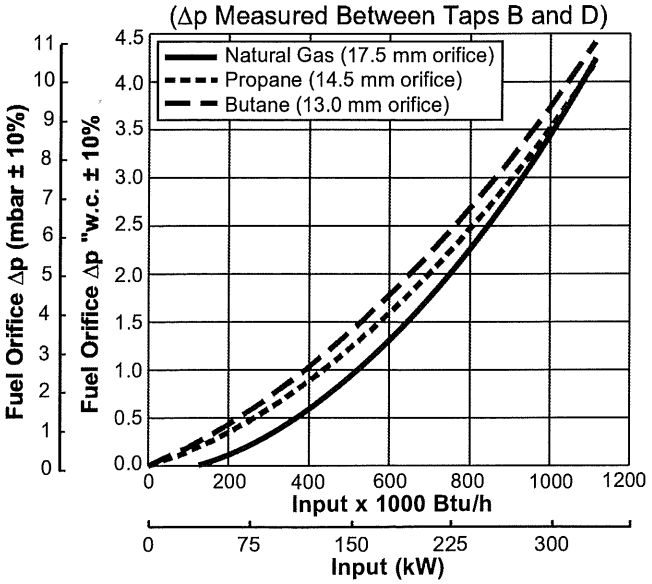

Air Δp vs. Input

(Δp Measured Between Tap C and the Chamber with the Burner Firing)

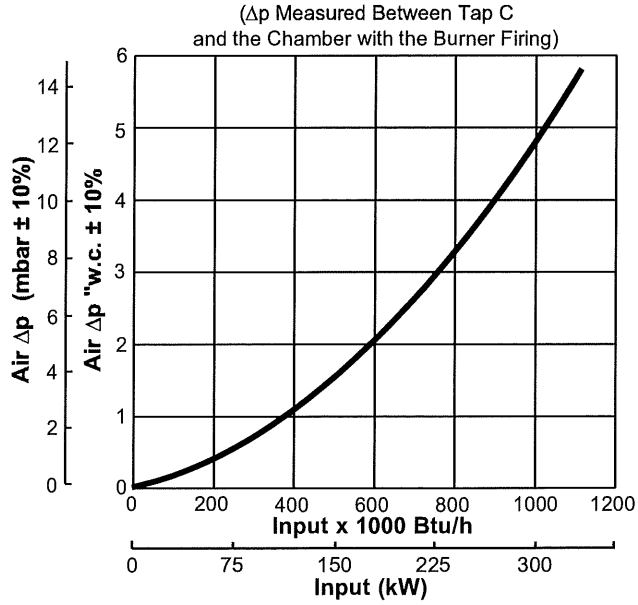

Medium Velocity Combustor Specifications

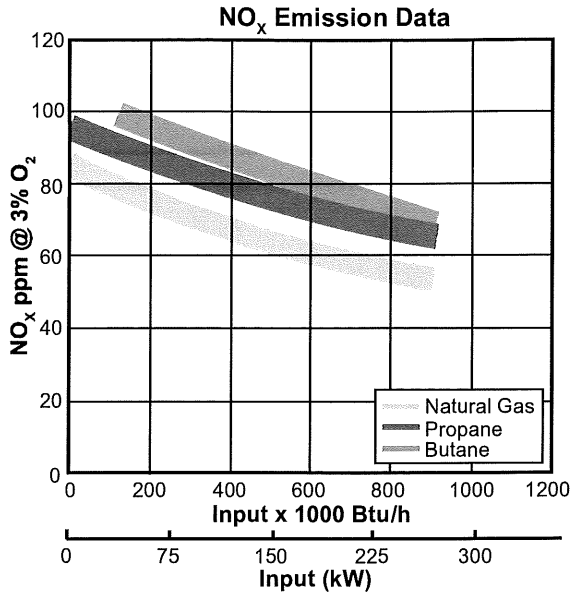

NO_X emission data is given for:

- Ambient combustion air ~70°F (21°C)
- Minimal process air velocity
- ppm volume dry at 3% O_2
- Neutral chamber pressure

Emissions from the burner are influenced by:

- Chamber conditions
- Fuel type
- Firing rate
- Ratio regulator adjustment
- Combustion air temperature

CO emission is largely influenced by chamber conditions. Contact your local Eclipse representative for an estimate of CO emission on your application.

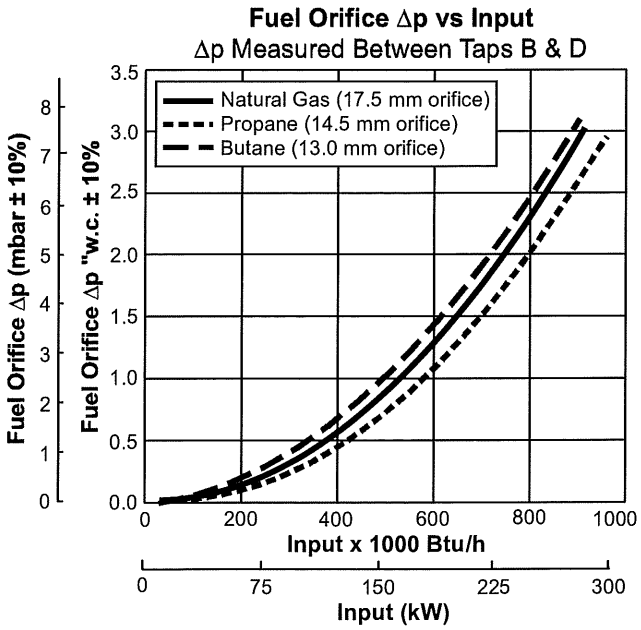

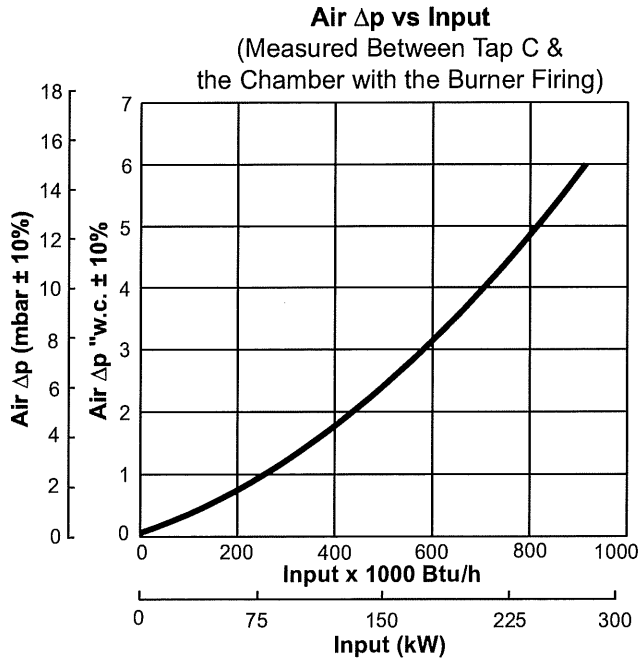

High Velocity Combustor Specifications

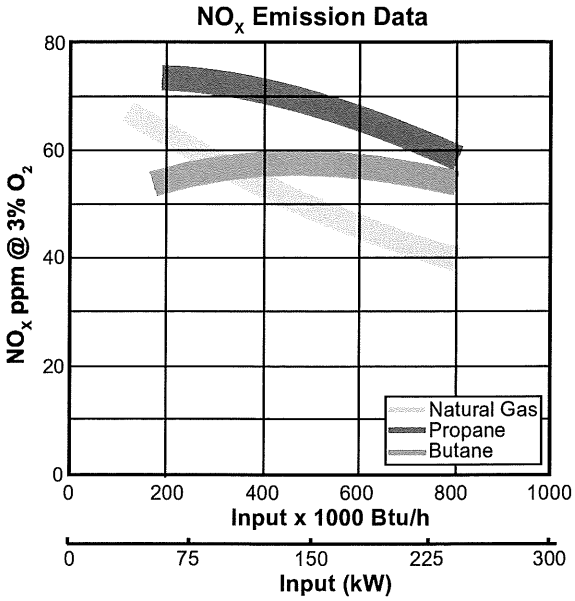

NO_x emission data is given for:

- Ambient combustion air ~70°F (21°C)
- Minimal process air velocity
- ppm volume dry at 3% O_2
- Neutral chamber pressure

Emissions from the burner are influenced by:

- Chamber conditions
- Fuel type
- Firing rate
- Ratio regulator adjustment
- Combustion air temperature

CO emission is largely influenced by chamber conditions. Contact your local Eclipse representative for an estimate of CO emission on your application.

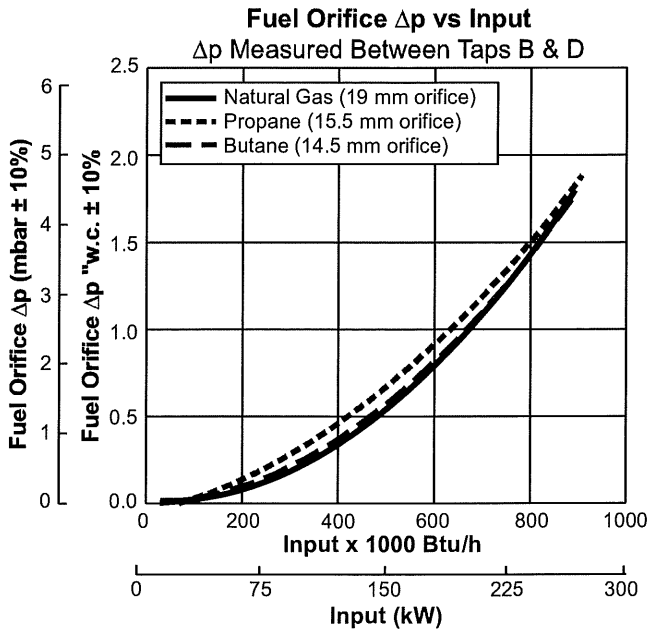

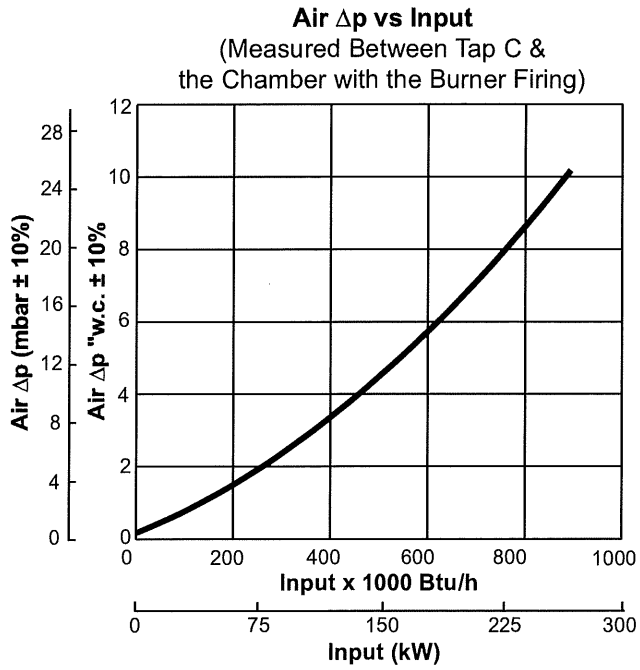

Dimensions and Specifications

Dimensions in mm (inches)

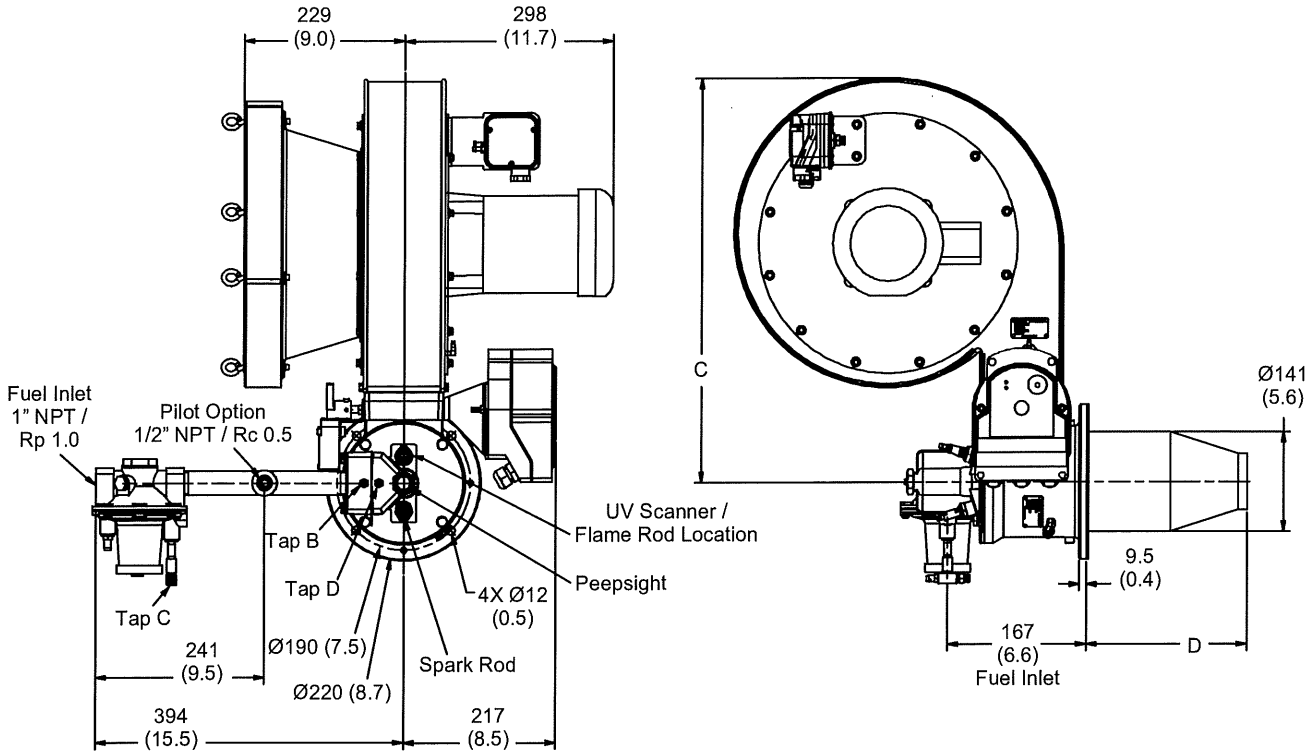

Blower	C
60 Hz (10" w.c.)	501 (19.7)
60 Hz (6" w.c.)	438 (17.2)
60 Hz (3" w.c.)	387 (15.2)
50 Hz (6" w.c.)	501 (19.7)
50 Hz (4.2" w.c.)	445 (17.5)

Combustor Type	D
Straight Alloy Tube	240 (9.4)
Straight Silicon Carbide Tube	230 (9.1)
Medium Velocity Alloy Tube	224 (8.8)
Medium Velocity Silicon Carbide Tube	230 (9.1)
High Velocity Alloy Tube	213 (8.4)
High Velocity Silicon Carbide Tube	230 (9.1)

Combustor Options

Straight Alloy Combustor

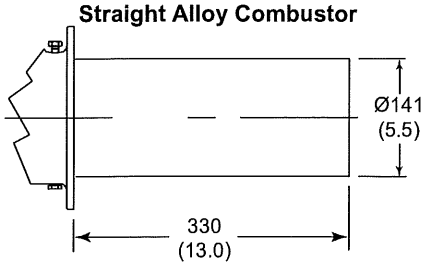

Medium & High Velocity Alloy Combustor

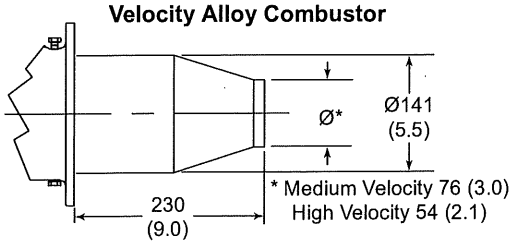

Mounting Pattern

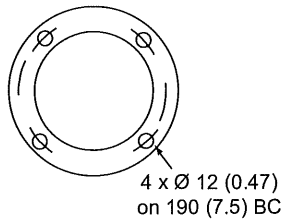

Straight SiC Combustor

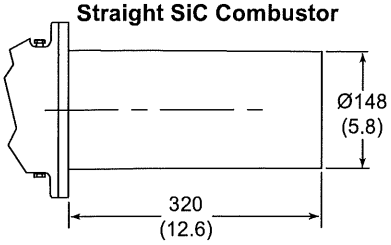

Medium & High Velocity SiC Combustor

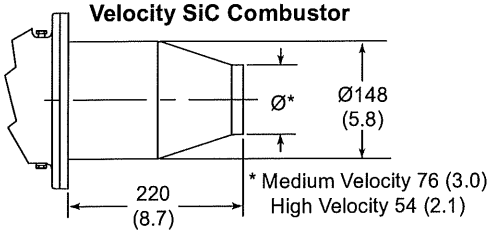

Mounting Pattern

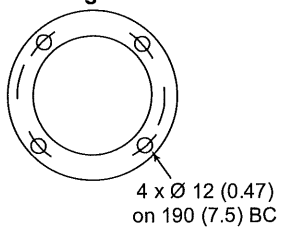

Block & Holder

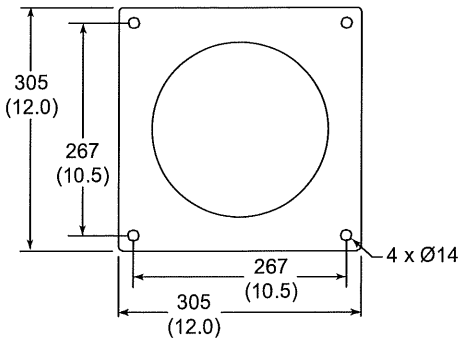

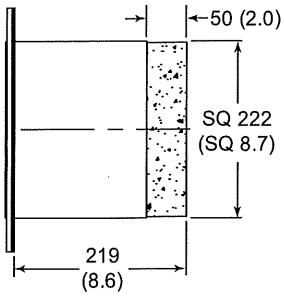

Burner Configurations

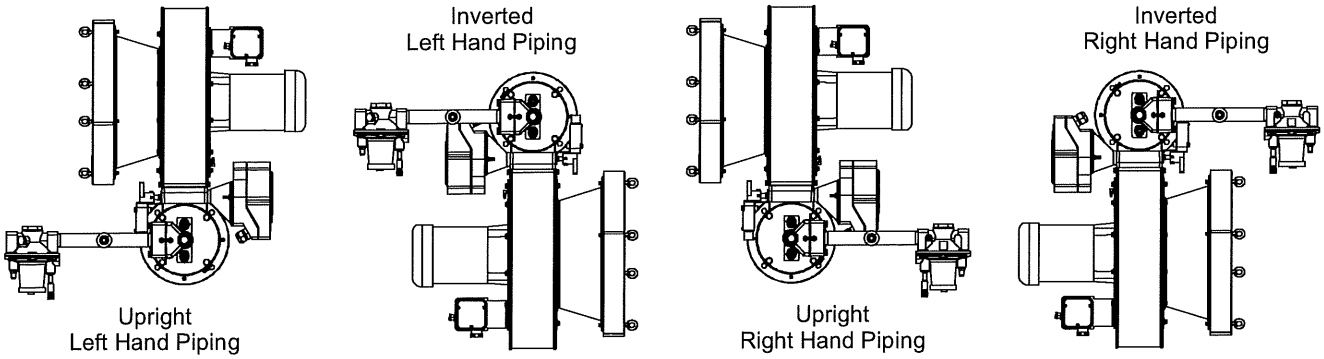

Even though the blower motor is on the "left" side of the inverted units, it is still a "right hand" motor in relationship to the blower assembly.

elster
Thermal Solutions

© Eclipse, Inc. All Rights Reserved

P.O. Box 2317 Gaylord, MI 49734
Phone: (989) 705-1768, Fax: (989) 732-1641

Quote: **IAT-Q30030**
Quote Date: 8/31/2016
Type: ORIGINAL
Steward: Jason Mathias
Direct Dial: (989) 705-1768
Fax: (989) 732-1641
Email: jasonma@indairtech.com

Account: P.KAY METAL INC
152 SOUTHPORT AVE
LEWISTON, ID 83501
Attention: DOUG GELLNER
Phone: (323) 336-7090
Fax:

Freight FOB: SHIPPING POINT
Freight Billing: BILL THIRD PARTY OR COLLECT
Shipping Point: TITLE TO ALL GOODS PASSES TO THE BUYER AT THE SHIPPING POINT

Item	Description	Quantity	Unit Price Less Options Less Freight Valid for 30 Days	Extended Price Less Options Less Freight Valid for 30 Days
1)	* INDUSTRIAL BLOWER - BISW 445, CLASS 4/E, ARR. 1CUSTOMER TO PROVIDE UPON ORDER, ROTATION: CUSTOMER TO PROVIDE UPON ORDER, DISCHARGE: CUSTOMER TO PROVIDE UPON ORDER (ANGLE NOT DEFINED) • CONSTRUCTION: HIGH TEMP. • PERCENT WIDTH: 100%, PERCENT DIAMETER: 100% • STATIC PRESSURE: 12.5 IN. WG, VOLUME FLOW: 50000 ACFM • RUN SPEED: 1585 RPM (BELT DRIVE) • MOTOR: 150 HP, 1800 RPM, 460V, 60 HZ • TAG: ROTARY FURNACE ALT PERFORMANCE • INLET DAMPER ACTUATOR: MANUAL <<< OPTIONAL ITEMS BELOW NOT INCLUDED IN PRICE >>> • OUTLET DAMPER: OPPOSED BLADE [$1247] • OUTLET DAMPER ACTUATOR: MANUAL [$0] • CUSTOMER OPTION: 200HP MOTOR FOR COLD START -ADD [$2534] • MOTOR MODIFICATION: B-230 - INSTALL AEGIS SHAFT GROUNDING RING - DE ONLY [$260]	1	US $ 25,235.00	US $ 25,235.00

Seller makes no warranty of merchantability or fitness for a particular purpose or application that this product may be used in. Quoted availability is based on current inventory status and/or material; check delivery when placing order. Delivery starts after we receive signed approval drawings. Stenographic and clerical errors are subject to correction. All order subject to Industrial Air Technology Corp. Standard Terms and Conditions of Sale.

Item	Description	Quantity	Unit Price Less Options Less Freight Valid for 30 Days	Extended Price Less Options Less Freight Valid for 30 Days
2)	* INDUSTRIAL BLOWER - BISW 300, CLASS 5/E, ARR. 1CUSTOMER TO PROVIDE UPON ORDER, ROTATION: CUSTOMER TO PROVIDE UPON ORDER, DISCHARGE: CUSTOMER TO PROVIDE UPON ORDER (ANGLE NOT DEFINED) • CONSTRUCTION: CARBON STEEL • PERCENT WIDTH: 110%, PERCENT DIAMETER: 100% • STATIC PRESSURE: 17.5 IN. WG, VOLUME FLOW: 25000 ACFM • RUN SPEED: 2428 RPM (BELT DRIVE) • MOTOR: 125 HP, 1800 RPM, 208-230/460V, 60 HZ • TAG: AMBIENT AIR • INLET DAMPER ACTUATOR: MANUAL <<< OPTIONAL ITEMS BELOW NOT INCLUDED IN PRICE >>> • OUTLET DAMPER: OPPOSED BLADE [$840] • OUTLET DAMPER ACTUATOR: MANUAL [$0] • MOTOR MODIFICATION: B-230 - INSTALL AEGIS SHAFT GROUNDING RING - DE ONLY [$260]	1	US $ 17,021.00	US $ 17,021.00
3)	* INDUSTRIAL BLOWER - BISW 330, CLASS 4/E, ARR. 1CUSTOMER TO PROVIDE UPON ORDER, ROTATION: CUSTOMER TO PROVIDE UPON ORDER, DISCHARGE: CUSTOMER TO PROVIDE UPON ORDER (ANGLE NOT DEFINED) • CONSTRUCTION: CARBON STEEL • PERCENT WIDTH: 100%, PERCENT DIAMETER: 100% • STATIC PRESSURE: 16 IN. WG, VOLUME FLOW: 30000 ACFM • RUN SPEED: 2230 RPM (BELT DRIVE) • MOTOR: 125 HP, 1800 RPM, 460V, 60 HZ • TAG: HOLDING KETTLES • INLET DAMPER ACTUATOR: MANUAL <<< OPTIONAL ITEMS BELOW NOT INCLUDED IN PRICE >>> • OUTLET DAMPER: OPPOSED BLADE [$889] • OUTLET DAMPER ACTUATOR: MANUAL [$0] • CUSTOMER OPTION: MOTOR SHAFT GROUNDING RING -ADD [$229]	1	US $ 17,314.00	US $ 17,314.00
4)	SHIPPING ESTIMATE TO LEWISTON, ID 83501 (LTL) BASED ON STD 360 (UP BLAST CONFIGURATION) OTHER CONFIG. MAY INCUR ADD'L FLAT BED CHARGES.	1	US $ 3,850.00	US $ 3,850.00

Seller makes no warranty of merchantability or fitness for a particular purpose or application that this product may be used in. Quoted availability is based on current inventory status and/or material; check delivery when placing order. Delivery starts after we receive signed approval drawings. Stenographic and clerical errors are subject to correction. All order subject to Industrial Air Technology Corp. Standard Terms and Conditions of Sale.

Phone: 913-831-0740
Fax: 913-831-9271
E-Mail: tracyj@camcorpinc.com
Web Site: www.camcorpinc.com

August 31, 2016

Mr. Bill Weston
P. Kay Metals, Inc.
Lewiston, ID

Ph: 323-336-7090
Email: billweston@pkaymetal.com

RE: Lewiston, Idaho Facility

Dear Mr. Weston:

We wish to thank you for giving CAMCORP, Inc. the opportunity to work with you on your dust filtration equipment requirements. In accordance with the above referenced subject, we are pleased to enclose our proposal # 0617-TJ1-16 Rev. 2 for your review and favorable consideration.

We trust that you find all complete and in proper order, however, if we can be of further service or assistance, please do not hesitate to contact us.

Very truly yours,

CAMCORP, INC.

Tracy Janssen
Vice President - Air Pollution Control

TAJ/taj

cc: Mr. Doug Gellner - Dust Control Solutions
Mr. Keith Horton - CAMCORP, Inc.

Application: Rotary Furnace
Product: Lead Dust
Product Loading: Unknown
Air Volume: 50,000 ACFM
Operating Temperature: 300°F
Air to Media Ratio: 2.98 to 1

Item	Qty	Description
1	(1)	CAMCORP Model 70TR10x1050 Pulse-Jet Top Loading Baghouse Dust Collector complete as follows:

- Welded Carbon Steel Heavy Duty Construction Reinforced for -20" W.C.:
  - # 12 Gauge Carbon Steel Housing and Hopper.
  - 3/16" Plate Carbon Steel Tubesheet.
  - 3x1/4 Exterior Re-enforcement.
- External Seam Welds Continuous, Internal Seams Stitch Welded.
- SSPC-SP6 Commercial Blast Surface Preparation.
- Exterior and Clean Air Plenum Interior Surfaces Finish Painted with a Direct to Metal Sherwin Williams KEM 500 Series Hi-Temp Protective Coating.
- (1,050) 6" Dia. x 120" Lg., 14 oz. Aramid (Nomex) Singed Felt Filter Bags, Snap Band No-Tool Design, providing a Total Filter Area of 16,800 Sq. Ft.
- (1,050) Heavy Duty # 11 Ga. Galvanized Steel (12) Wire Bag Support Cages with Integral Venturis.
- Reverse/Pulse Cleaning System Consisting of:
  - 6" Compressed Air Header Pipe.
  - (70) 1½" Diameter Double Diaphragm Valves.
  - (70) 1/8" Diameter Solenoid Valves Mounted in a NEMA 4 Enclosure.
  - Factory Installed Tubing between Solenoid and Diaphragm Valves.
  - NOTE: 6.0 CF Per Valve Per Pulse of 90 - 100 PSIG Compressed Air Required.
- Solid State Sequential Timer Board Assembly Mounted in a NEMA 4 Encl.
  - NOTE: 110 V, 1 PH Power Required.
- Differential Pressure Gauge, Kit consisting of:
  - Dwyer Magnehelic Gauge.
  - Mounting Bracket.
  - 50 Ft. 1/4" Dia. Tubing, and Necessary Fittings.
- Clean Air Plenum with Quick Opening, Clamped and Lift-Off Doors for Access to (No Tool Removal) Filter Bags & Cages.
- Broken Bag Detector.
- Dirty Air Housing.
- Trough Hopper with 60° Side Slope, Radial Inlets with Baffles, 18" Dia. Bolted Access Ports, and Flanged Hopper Discharge (Discharge Devices by Others).
- Structural Supports providing 48" clearance below Hopper Discharge.
- Ladder, Cage & Plenum Roof Railing.

Total Price, Item 1, F.O.B. Point of Manufacture---------- $249,700.00

Application: Ambient Air
Product: Lead Dust
Product Loading: Unknown
Air Volume: 25,000 CFM
Operating Temperature: Ambient
Air to Media Ratio: 2.57 to 1
Can Velocity: 273 FPM
Interstitial Velocity: 457 FPM

Item	Qty	Description
2	(1)	CAMCORP CAM-AIRO™ Model CA30 Vertical Cartridge Dust Collector complete as follows:

- Welded Carbon Steel Heavy Duty Construction Reinforced for -25" W.C.:
  - # 12 Gauge Carbon Steel Housing and Hopper.
  - 3/16" Plate Carbon Steel Tubesheet.
  - 3x1/4 Exterior Re-enforcement.
- External Seam Welds Continuous, Internal Seams Stitch Welded.
- External Surfaces Primed & Finish Painted with White Industrial Enamel (Alternate Colors Available).
- (30) 15" Diameter x 52" Long, 80/20 Cellulose/Synthetic Blend Cartridge Elements providing a Total Filter Area of 9,750 Sq. Ft.
- Reverse/Pulse Cleaning System Consisting of:
  - 6" Compressed Air Header Pipe.
  - (6) 2" Diameter Diaphragm Valves.
  - (6) 1/8" Diameter Solenoid Valves Mounted in a NEMA 4 Enclosure.
  - Factory Installed Tubing between Solenoid and Diaphragm Valves.
  - NOTE: 12.0 CF Per Valve Per Pulse of 90 - 100 PSIG Compressed Air Required.
- Dwyer DCT1000 Solid State 'Smart/Demand Cleaning' Sequential Timer Board and Differential Pressure Assembly Mounted in a NEMA 4X Encl.
  - NOTE: 110 V, 1 PH Power Required.
- Differential Pressure Kit consisting of:
  - 50 Ft. 1/4" Dia. Tubing, and Necessary Fittings.
- Clean Air Plenum with Flanged Exhaust.
- Broken Bag Detector.
- Dirty Air Housing with (3) Quick Opening, Hinged and Clamped Doors for Access to Side Removal Filter Elements.
- High Entry Inlet Design Creating a General Cross/Downward Air Flow Pattern.
- Pyramidal Hopper with 60° Side Slope, 18" Dia. Bolted Access Port and Flanged Hopper Discharge (Discharge Device by Others).
- Structural Supports providing 48" clearance below Hopper Discharge.
- Ladder & Cartridge Access Platform.

Total Price, Item 2, F.O.B. Point of Manufacture----------$42,600.00

Application: Holding Kettle
Product: Lead Dust
Product Loading: Unknown
Air Volume: 30,000 CFM
Operating Temperature: Ambient
Air to Media Ratio: 2.98 to 1

Item	Qty	Description
3	(1)	CAMCORP Model 42TR10x630 Pulse-Jet Top Loading Baghouse Dust Collector complete as follows:

- Welded Carbon Steel Heavy Duty Construction Reinforced for -20" W.C.:
  - # 12 Gauge Carbon Steel Housing and Hopper.
  - 3/16" Plate Carbon Steel Tubesheet.
  - 3x1/4 Exterior Re-enforcement.
- External Seam Welds Continuous, Internal Seams Stitch Welded.
- Exterior and Clean Air Plenum Interior Surfaces Primed and Finish Painted with White Industrial Enamel (Alternate Colors Available).
- (630) 6" Dia. x 120" Lg., Filter Bags, 16 oz. Singed Polyester Felt Snap Band No-Tool Design, providing a Total Filter Area of 10,080 Sq. Ft.
- (630) Heavy Duty # 11 Ga. Galvanized Steel (12) Wire Bag Support Cages with Integral Venturis.
- Reverse/Pulse Cleaning System Consisting of:
  - 6" Compressed Air Header Pipe.
  - (42) 1½" Diameter Double Diaphragm Valves.
  - (42) 1/8" Diameter Solenoid Valves Mounted in a NEMA 4 Enclosure.
  - Factory Installed Tubing between Solenoid and Diaphragm Valves.
  - NOTE: 6.0 CF Per Valve Per Pulse of 90 - 100 PSIG Compressed Air Required.
- Solid State Sequential Timer Board Assembly Mounted in a NEMA 4 Encl.
  - NOTE: 110 V, 1 PH Power Required.
- Differential Pressure Gauge, Kit consisting of:
  - Dwyer Magnehelic Gauge.
  - Mounting Bracket.
  - 50 Ft. 1/4" Dia. Tubing, and Necessary Fittings.
- Clean Air Plenum with Quick Opening, Clamped and Lift-Off Doors for Access to (No Tool Removal) Filter Bags & Cages.
- Broken Bag Detector.
- Dirty Air Housing.
- Trough Hopper with 60° Side Slope, Radial Inlets with Baffles, 18" Dia. Bolted Access Ports, and Flanged Hopper Discharge (Discharge Devices by Others).
- Structural Supports providing 48" clearance below Hopper Discharge.
- Ladder, Cage & Plenum Roof Railing.

Total Price, Item 3, F.O.B. Point of Manufacture---------- $129,400.00

OPTIONS

4 (1 Lot) Consisting of (1,050) Spare 6" Dia. x 120” Lg., 14 oz. Aramid (Nomex) Singed Felt Filter Bags.

Total **ADD** ----------$24,885.00

5 (1 Lot) Consisting of (30) Spare 15” Diameter x 52” Long, 80/20 Cellulose/Synthetic Blend Cartridge Elements.

Total **ADD** ---------- $3,502.50

6 (1 Lot) Consisting of (630) Spare 6" Dia. x 120” Lg., 16 oz. Polyester Singed Felt Filter Bags.

Total **ADD** ---------- $6,111.00

Estimated Freight to Lewiston, Idaho ----------$49,000.00

The prices quoted herein shall remain in effect for 30 days from the date of this quotation. After 30 days, due to unstable pricing in the steel market, this proposal will be subject to current pricing at time of order.

Prices DO NOT Include **(unless otherwise stated in the body of the proposal):**

- Structural Supports or Service Platforms.
- Engineered Structural Loading Calculations.
- Mechanical and Electrical Start-Up Assistance.
- System Control Panels or Motor Starters.
- Ductwork, Pipe or Hangers.
- Concrete, Mechanical or Electrical Installation.
- Explosion Isolation or Suppression Systems.
- Explosion Relief or Vent Panels.

NOTE:

We have not included explosion relief or vent panels at this time. The purchaser and/or owner/end-user assumes the responsibility for contacting their insurance underwriter and advising CAMCORP, INC. in regard to specific application requirements of deflagration venting or if additional fire, spark, explosion detection, suppression, isolation and control equipment may be required.

FREIGHT:

- FOB: Points of Manufacture: Freight not allowed.
- Equipment requiring drop shipments from other manufacturers direct to the jobsite will be invoiced per CAMCORP's terms as stated below. If Purchaser requests consolidation of all equipment then Purchaser will be responsible for inbound freight to CAMCORP's facility and will be invoiced per CAMCORP's terms as stated below.

DELIVERY:

- Approval Drawings shall be submitted within 10 working days of contract award.
- Equipment's release to fabrication shall not occur until CAMCORP is in receipt of "Customer Approved" equipment drawings. (Drawings must be approved by customer within 20 working days after approval drawings are submitted unless otherwise stated elsewhere to allow CAMCORP to proceed with procurement of materials and commence fabrication. If approval drawings are delayed beyond this timeframe then prices are subject to escalation and shipping dates could be extended.)
- Equipment Ship Date: 15 to 16 weeks after release to fabrication; ***Negotiable*.**

PAYMENT TERMS: *Negotiable.*

- 30 % Due Upon Placement of Order.
- 30 % Due Upon Approval and Release to Fabrication.
- 30 % Due Prior to Shipment.
- 10 % Due Net 30 Days After Shipment.

TERMS AND CONDITIONS OF SALE

PLEASE CAREFULLY READ THESE TERMS AND CONDITIONS, AS THEY WILL BECOME PART OF OUR LEGALLY BINDING CONTRACT IF YOU AGREE TO MAKE ANY PURCHASE FROM CAMCORP. CAMCORP EXPRESSLY REJECTS ANY AND ALL CHANGES TO THESE TERMS AND CONDITIONS OF SALE THAT YOU MAY WISH TO PROPOSE, PAST, PRESENT, OR FUTURE, UNLESS SIGNED BY AN OFFICER OF CAMCORP DESIGNATED AS SUCH IN THE WRITTEN AGREEMENT. ANY PURCHASE BY YOU FROM CAMCORP IS EXPRESSLY LIMITED TO THESE TERMS AND CONDITIONS OF SALE, NOTWITHSTANDING ANY ATTEMPT BY YOU TO MODIFY THEM BY FUTURE PURCHASE ORDER OR OTHERWISE, AS CAMCORP WOULD NOT, AND DOES NOT, ASSENT TO ANY AGREEMENT BETWEEN THE PARTIES EXCEPT AS SET FORTH IN THESE TERMS AND CONDITIONS OF SALE. IF NOT UNDERSTOOD, OR IF YOU DO NOT AGREE IN FULL TO THE TERMS AND CONDITIONS OF SALE HEREIN, DO NOT MAKE A PURCHASE FROM CAMCORP AND CONSULT AN ATTORNEY.

1. **General**. The Terms and Conditions of Sale outlined herein shall apply to the sale by CAMCORP of products, equipment and parts (the "Equipment") to **P. Kay Metals, Inc.** (Purchaser). Acceptance of orders, whether oral or written, is based on the express condition that Purchaser agrees to all of the terms and conditions contained herein. Placement of orders, whether oral or written, by Purchaser will constitute Purchaser's assent to these terms and conditions. These terms and conditions represent the complete agreement of the parties, superseding all previous communications, and no terms or conditions in any way adding to, modifying or otherwise changing the provisions stated herein shall be binding upon CAMCORP unless made in writing and signed and approved by an officer of CAMCORP. No modifications of any of these terms will be effected by CAMCORP's shipment of goods following receipt of Purchaser's purchase order, shipping request or similar request or similar forms containing printed terms and conflicting or inconsistent with the terms herein. Purchaser acknowledges and agrees that CAMCORP expressly limits acceptance by Purchaser to the written Terms and Conditions of Sale outlined herein, and CAMCORP will not and does not agree to any other terms or conditions, including without limitation any terms or conditions that Purchaser may propose via purchase order or otherwise, absent express, written agreement specifying the additional or different terms and conditions being accepted by CAMCORP and signed by an officer of CAMCORP, and such written agreement must expressly acknowledge the officer status of CAMCORP's representative, otherwise it will not be legally binding nor of any legal force or effect.
2. **Prices**. All prices are F.O.B. CAMCORP's factory and are subject to adjustment, without notice, to CAMCORP's prices in effect at the time of shipment. Price does not include freight charges and installation services unless otherwise stated. If freight is to be pre-paid and added, it will be done at actual cost plus 15%.
3. **Payment Terms**. All accounts shall be paid in U.S. dollars at CAMCORP's principal offices, in accordance with the terms specified in the quotation and/or listed on CAMCORP's invoice. If, in the judgment of CAMCORP, the financial condition of Purchaser at the time Equipment is ready for shipment does not justify the terms of payment specified, CAMCORP may require full payment before making shipment. A service charge of the lesser of 1-1/2% per month or the maximum permissible rate will be added to all past due accounts. If CAMCORP refers a claim for payment to an attorney for collection, Purchaser shall pay all costs and attorney's fees incurred or expended by CAMCORP in pursuing such collection, including without limitation through any and all lawsuits and appeals.
4. **Storage Fees**. There is a one (1) week "grace period" from time of completion for storage at no charge. Afterwhich, CAMCORP will assess storage fees for any equipment stored after one (1) week. The price of the storage fees for equipment smaller than 7' diameter (or 7' square) is $200.00 the first week and $75.00 each week thereafter. The storage fees for equipment 7' diameter and larger (or 7' square and larger) will be $400.00 the first week and $150.00 each week thereafter. This pricing structure is for each piece of equipment.
5. **Crating Fees**. For equipment that is to ship via common carrier there will be an additional fee for packaging/crating equipment for safe transportation in a common carrier.
6. **Title and Risk of Loss**. Title and risk of loss or damage to the Equipment shall pass to the Purchaser upon tender of delivery F.O.B. CAMCORP's factory or other place of manufacture. Notwithstanding the foregoing, any claim by Purchaser against CAMCORP for shortage or damage occurring prior to such delivery must be made in writing ten (10) days after receipt of shipment and accompanied by original transportation bill signed by carrier noting that carrier received goods from CAMCORP in the condition claimed. Any claim by Purchaser for damage occurring during shipment shall be made directly against the freight carrier, with a copy of such claim forwarded to CAMCORP within ten (10) days. In case of failure to provide written notification of claim to the freight carrier and/or CAMCORP with such time period, such claim shall be invalid unless otherwise agreed by CAMCORP in writing. Any shipments returned to CAMCORP as a result of Purchaser's unexcused delay or failure to accept delivery will require Purchaser to pay all additional costs incurred by CAMCORP.
7. **Security**. If Purchaser fails to make payment in accordance with the terms hereof, CAMCORP reserves the right, at its sole option, to remove and reclaim the Equipment upon tender to Purchaser of the whole sum paid to CAMCORP by said Purchaser on account of the purchase price of said Equipment and thereby terminate any and all liability of CAMCORP to the Purchaser on account of the purchase and use of the Equipment. If, in the judgment of CAMCORP, the financial condition of the Purchaser at the time the Equipment is ready for shipment does not justify the terms of payment specified, CAMCORP may require full payment before making shipment. Purchaser hereby grants to CAMCORP a security interest in the Equipment to secure its obligations hereunder, regardless of mode of attachment to realty or other property, until full payment has been made therefor. Purchaser agrees upon request to do all things and acts necessary to perfect and maintain said security interest and shall protect CAMCORP's interest by adequately insuring the Equipment against loss or damage from any cause wherein CAMCORP shall be named as an additional insured whereas all the costs incurred shall be borne by the Purchaser.
8. **Assignment**. Neither party shall assign or transfer this contract without prior written consent of the other party.

9. **Delivery and Delay**. Delivery dates shall be interpreted as estimated and in no event shall dates be construed as falling within the meaning "time is of the essence." CAMCORP shall not be liable for any loss or delay due to war, riots, fire, flood, strikes or other labor difficulty, acts of civil or military authority including governmental laws, orders, priorities or regulations, acts of the Purchaser, embargo, shortage of transportation facilities or delay in transportation, or inability to obtain necessary labor or materials from usual sources, other contingencies of manufacture or shipment, or other causes beyond the reasonable control of CAMCORP. In the event of delay in performance due to any such cause, the date of delivery or time for completion will be adjusted to reflect the actual length of time lost by reason of such delay. Purchaser's receipt of Equipment shall constitute a waiver of any claims for delay. CAMCORP will use all reasonable efforts to comply with Purchaser's request as to method of shipment, but CAMCORP reserves the right to use an alternate method of transportation or route of shipment if substantial delay might otherwise occur. In such cases CAMCORP will notify Purchaser of such changes as soon as reasonably possible. If the Purchaser declines or is unable to take delivery at the time(s) specified, CAMCORP will have the Equipment stored for Purchaser's risk and account, and the Equipment shall be considered "shipped". In such circumstance, the delivery shall be deemed to be accepted provided that the risk and title shall pass to the Purchaser from the delivery date specified by CAMCORP.
10. **Taxes**. Except for sales tax imposed in the State of Kansas, if applicable, the price does not include any present or future Federal, State or local property, license, privilege, sales, use, gross receipt or other excise, transportation, occupational, like taxes or assessments which may be applicable to, measured by, imposed upon or result from this transaction or any services performed in connection therewith. Any taxes itemized separately to Purchaser on CAMCORP's quotation, order acknowledgment or invoice shall be paid promptly to CAMCORP. All other taxes incurred by the Purchaser through performance of the contract shall be the Purchaser's responsibility to pay directly to the proper taxing authority or if any tax imposed under the Purchaser's performance, it shall be reimbursed to the account of the Purchaser. CAMCORP will accept a valid exemption certificate from Purchaser, if applicable.
11. **Set Off**. Neither Purchaser nor any affiliated company nor assignee shall have the right to claim compensation or to set off against any amounts that become payable to CAMCORP under this contract or otherwise.
12. **Patents**. CAMCORP shall defend any suit or proceeding brought against Purchaser and shall pay any adverse judgment entered therein so far as such suit or proceeding is based upon a claim that the use of the Equipment manufactured under this contract constitutes infringement of any patent of the United States of America, provided CAMCORP is promptly notified in writing and given authority, information and assistance for defense of same; and CAMCORP may, at its sole option, procure the Purchaser the right to continue to use said Equipment, modify it so that it becomes noninfringing, replace the same with noninfringing equipment, or remove said Equipment and refund the purchase price to Purchaser. The foregoing shall not be construed to include an agreement by CAMCORP to accept any liability whatsoever in respect to patents for inventories including more than the Equipment furnished hereunder, or in respect of patents for methods and processes to be carried out with the aid of said Equipment. The foregoing states the entire liability of CAMCORP with regard to patent infringement. Purchaser shall, in respect of goods manufactured or packaged by CAMCORP in accordance with designs, processes or formulas supplied, determined or requested by Purchaser, defend CAMCORP at Purchaser's expense and pay costs and damages awarded in any suit brought against CAMCORP for infringement of any patent by any reason of use of such designs, processes or formulas provided CAMCORP promptly notifies the Purchaser in writing of any claim of or suit for infringement and tenders defense thereof to Purchaser. CAMCORP is entitled to be represented in any suit at its own expense.
13. **Warranty**. CAMCORP warrants that the equipment manufactured by it and delivered hereunder will be free of defects in material and workmanship for a period of eighteen (18) months from the date of shipment by CAMCORP or twelve (12) months from commencement of use of the equipment, whichever comes first (the "Warranty Period"). Notwithstanding, the warranty period is not reviewed or extended by or through repair or replacement whatsoever. Purchaser shall be obligated to promptly report within 24 hours of any failure of the Equipment to conform to this warranty in writing to CAMCORP within the Warranty Period, whereupon CAMCORP shall, at its option, correct such nonconformity by suitable repair to such Equipment, or furnish a replacement part F.O.B. point of shipment, provided Purchaser has stored, installed, maintained and operated such Equipment in accordance with good industry practices and has complied with specific recommendations or instruction of CAMCORP. CAMCORP does not warranty accessories or equipment furnished by CAMCORP, but manufactured by others, and such accessories or equipment shall carry whatever warranty the manufacturer has conveyed to CAMCORP and which can be passed on to the Purchaser. CAMCORP shall not be liable for any repairs, replacements, or adjustment to the Equipment or any costs of labor performed by Purchaser or others without CAMCORP's prior written approval. Equipment returns for any reason will be refused without CAMCORP's prior written approval. Samples supplied by CAMCORP are solely for the purpose of evaluating the suitability of such material for potential use and, as such, the samples are not intended to serve as warranties of any type, either express or implied. Upon request, CAMCORP will endeavor to furnish such technical advice as is reasonably requested by Purchaser in writing. This warranty shall not apply to Equipment that has been altered, modified or repaired by anyone other than CAMCORP or to Equipment that has been damaged through accident, misuse, neglect or lack of proper maintenance. The effects of corrosion, erosion and normal wear and tear on the Equipment are specifically excluded from this warranty. **CAMCORP MAKES NO OTHER WARRANTY OR REPRESENTATION OF ANY KIND WHATSOEVER, EXPRESSED OR IMPLIED, EXCEPT THAT OF TITLE, AND ALL IMPLIED WARRANTIES OF MERCHANTABILITY AND FITNESS FOR A PARTICULAR PURPOSE ARE HEREBY DISCLAIMED.** Correction by CAMCORP of nonconformities whether patent or latent, in the manner and for the period of time provided above, shall constitute fulfillment of all liabilities of CAMCORP for such nonconformities, whether based on contract, warranty, negligence, indemnity strict liability or otherwise with respect to or arising out of such Equipment.
14. **Limitation of Liability**. **The remedies of Purchaser set forth herein are exclusive, and the liability of CAMCORP with respect to this contract or the Equipment and services furnished hereunder, in connection with the performance or breach thereof, or from the manufacture, sale, delivery, installation, repair or technical direction covered by or furnished under this contract, whether based on contract, warranty, negligence, indemnity, strict liability or other any other type of claim or demand, shall not, under any circumstances whatsoever, exceed the purchase price of the unit of Equipment upon which such liability is**

based. CAMCORP AND ITS SUPPLIERS SHALL IN NO EVENT BE LIABLE TO PURCHASER, ANY SUCCESSORS IN INTEREST OR ANY BENEFICIARY OR ASSIGNEE OF THIS CONTRACT FOR ANY CONSEQUENTIAL, INCIDENTAL, INDIRECT, SPECIAL OR PUNITIVE DAMAGES ARISING OUT OF THIS CONTRACT OR ANY BREACH THEREOF, OR ANY DEFECT IN, OR FAILURE OF, OR MALFUNCTION OF THE EQUIPMENT HEREUNDER, WHETHER BASED UPON LOSS OF USE, LOST PROFITS OR REVENUE, INTEREST, LOST GOODWILL, WORK STOPPAGE, IMPAIRMENT OF OTHER GOODS, LOSS BY REASON OF SHUTDOWN OR NON-OPERATION, INCREASED EXPENSES OF OPERATION, COST OF PURCHASE OF REPLACEMENT POWER OR CLAIMS OF PURCHASER OR CUSTOMERS OF PURCHASER FOR SERVICE INTERRUPTION WHETHER OR NOT SUCH LOSS OR DAMAGE IS BASED ON CONTRACT, WARRANTY, NEGLIGENCE, INDEMNITY, STRICT LIABILITY OR OTHERWISE, EVEN IF CAMCORP HAS BEEN ADVISED OF THE POSSIBILITY OF SUCH DAMAGES. Any claim by Purchaser with reference to the goods, services, or Equipment sold hereunder for any cause shall be deemed waived by Purchaser unless submitted to CAMCORP in writing within thirty (30) days from the date Purchaser discovered or should have reasonably discovered any claimed breach. This Limitation of Liability is critical to CAMCORP's agreement to provide any goods, services, or Equipment to Purchaser, and CAMCORP would not, and does not, assent to any agreement to provide any goods, services, or Equipment to Purchaser whatsoever unless this Limitation of Liability is included in the parties' agreement and bargain. CAMCORP expressly rejects any attempt by Purchaser to limit or eliminate this Limitation of Liability, as CAMCORP's assent to any agreement with Purchaser is expressly conditioned on Purchaser's agreement, in full, to this Limitation of Liability.

15. **Indemnification**. Purchaser shall indemnify and defend CAMCORP and hold CAMCORP harmless from all losses, costs and expenses including attorneys' fees incurred by CAMCORP in the defense of any lawsuit, proceedings or claims that may be asserted against CAMCORP based upon alleged defects in or failures of the goods, services, or Equipment where such defects or failures are the result of the actions of persons other than CAMCORP.
16. **Cancellation Charges**. If Purchaser notifies CAMCORP that it terminates this order for its convenience, CAMCORP will stop all work as promptly as reasonably possible, but Purchaser shall be responsible for a cancellation charge, computed on the basis of CAMCORP's full cost including overhead, plus twenty percent (20%), for all engineering work, work in progress, raw material, supplies, administrative expenses and all commitments made by CAMCORP in connection with the order, less such allowances as CAMCORP may be in position to make for any standard components and for the balance of the material as scrap. If any portion of the Equipment subject to the quotation, order acknowledgement or invoice is identified as "special" or "Made to Order," Purchaser's order shall not be canceled or cancelable by Purchaser' after acceptable by CAMCORP, except upon payment in full of the purchase price.
17. **Confidentiality**. Any proposals, prints, brochures, drawings, or other information furnished by CAMCORP are intended for confidential use by Purchaser, shall remain the property of CAMCORP, and shall not be disclosed or used to the detriment of CAMCORP's competitive position, and are protected against unlawful use or disclosure by common law and federal and state statutes that cover copyright, patents, trademarks, and trade secrets. Any unauthorized use, printing, copying, disclosure or dissemination of such information may be subject to legal restriction or sanction.
18. **Promotional Material**. All CAMCORP's drawings, descriptive matter, weights, dimensions, the descriptions and illustrations contained in CAMCORP's catalogues, price lists or advertisements, are approximate only and intended merely to give a general idea of the goods described therein and shall not form part of this contract. Because CAMCORP is continually researching and improving its products, it reserves the right to improve, correct and/or further modify its designs and specifications upon notification and mutual agreement between CAMCORP and Purchaser.
19. **Waiver**. Waiver by CAMCORP of any term, condition, or right herein shall not be construed as a waiver of any other term, condition, or right, and failure by CAMCORP to exercise any right arising from any default by Purchaser hereunder shall not be deemed a waiver of such right that may be exercised at any subsequent time.
20. **Severability**. In the event that any one or more of these terms or conditions are held invalid, illegal or unenforceable, such provisions shall be severed and the remaining terms and conditions shall remain binding and effective.
21. **Governing Law**. This contract and all rights and obligations hereunder, including matters of construction, validity and performance, shall be governed exclusively by the laws of the State of Kansas, including the Uniform Commercial Code, without giving effect to the principles of conflicts of law thereof. In the event Purchaser's place of business is in a country that has ratified the United Nations Convention of the International Sale of Goods (1980) ("Convention"), the parties agree to exclude application of the Convention. Venue and jurisdiction with respect to any suit in connection with these terms and conditions and any sales pursuant hereto shall reside solely and exclusively in the courts of Johnson County, Kansas. Purchaser agrees to submit to venue and jurisdiction in the courts of Johnson County, Kansas.
22. **Purchaser's Use**. Purchaser hereby agrees as part of CAMCORP's consideration to sell the Equipment to Purchaser that Purchaser shall use and require all persons operating the Equipment to use any and all proper, safe operating procedures set forth in operator's manual, American National Safety Standards, OSHA Regulations, and instruction sheets relating to the Equipment, and any and all available, feasible and practical point of operation safety devices consistent with Purchaser's use of the Equipment; and Purchaser shall not remove or modify any device, warning sign, operator's manual or work handling tools installed thereon or attached thereto. Purchaser shall notify CAMCORP promptly, in writing, in all events within ten (10) days after its occurrence, of any accident or malfunction involving any Equipment which results in injury to or death of persons, including Purchaser's agents or employees, or damage to property, including Purchaser's property, or the loss of use thereof; and Purchaser shall cooperate fully with CAMCORP in investigating and determining the cause of any such accident or malfunction. Purchaser agrees to indemnify, protect, defend and save harmless, at Purchaser's cost and expense, CAMCORP, its directors, officers and employees and each of them from any loss, liability, cost and damages imposed upon or resulting to them, attributed to the failure of Purchaser to abide by the provision of this Section. Purchaser shall not operate Equipment that is considered to be defective without first notifying CAMCORP in writing of its intentions to do so. Any such use of Equipment shall be at Purchaser's sole risk and liability.

Call us anytime you have design or engineering requirements for stand alone equipment all the way up to a "Turnkey" system (new or retrofit) for air pollution control equipment; and pneumatic material conveying and bulk storage systems.

We thank you in advance for your consideration of our equipment proposal and, at the same time, we shall look forward to any questions you may have for us.

Very truly yours,

CAMCORP, INC.

Tracy Janssen
Vice President - Air Pollution Control

TAJ/taj

cc: Mr. Doug Gellner - Dust Control Solutions
Mr. Keith Horton - CAMCORP, Inc.

Phone: 913-831-0740
Fax: 913-831-9271
E-Mail: tracyj@camcorpinc.com
Web Site: www.camcorpinc.com

September 26, 2016

Ms. Betsy Speare
Spring Environmental, Inc.
1011 N. Cedar Street
Spokane, WA 99201

Ph: 509-328-7500 Ext. 304
Email: betsy@springenvironmental.com

RE: P. Kay Metals, Inc.
Lewiston, Idaho
CAMCORP Proposal # 0617-TJ1-16 Rev. 2

Dear Betsy:

Per your request, please find following our statement of efficiency for the above referenced facility.

Based on the CAMCORP Model 70TR10x1050 Baghouse Dust Collector being properly sized & applied, supplied with and properly seasoned 14 ounce singed aramid felt filter media, and operated at 50,000 ACFM in accordance with the stated parameters in the proposal and the Installation, Operation and Maintenance Manuals, will achieve 99% efficiency on 2 micron and larger by weight dry particulate matter, during the life of the media.

Based on the CAMCORP CAM-AIRO™ Model CA30 Vertical Cartridge Dust Collector being properly sized & applied, supplied with and properly seasoned 80/20 cellulose/synthetic blend cartridge elements, and operated at 25,000 ACFM in accordance with the stated parameters in the proposal and the Installation, Operation and Maintenance Manuals, will achieve 99% efficiency on 2 micron and larger by weight dry particulate matter, during the life of the media.

Based on the CAMCORP Model 42TR10x630 Baghouse Dust Collector being properly sized & applied, supplied with and properly seasoned 16 ounce singed polyester felt filter media, and operated at 30,000 ACFM in accordance with the stated parameters in the proposal and the Installation, Operation and Maintenance Manuals, will achieve 99% efficiency on 2 micron and larger by weight dry particulate matter, during the life of the media.

CAMCORP, INC.
9732 Pflumm Road • Lenexa, Kansas 66215

The guarantee is subject to the following conditions:

- The equipment will be installed, operated and maintained according to generally accepted and approved engineering and construction standards and in accordance with CAMCORP Installation, Operation and Maintenance instructions. Buyer must maintain adequate records to allow verification of such operation and maintenance.
- Owner will perform black light testing before systems operation to ensure no dust leakage through the baghouse. If leakage occurs, CAMCORP will determine the cause of such failure. The results will determine the recommended course of corrective actions. If bag material or workmanship is found to be the cause of the non-compliance, CAMCORP will replace bags in question at no charge, or make compensation to the end-user in the amount of CAMCORP cost of the bags to be replaced on a one-for-one basis. If the non-compliance is determined to be damage to the media as a result of improper handling or installation of the bags by the installer, replacement costs are to be responsibility of the Owner.
- Tests to determine compliance with CAMCORP's particulate emissions guarantee shall be performed in accordance with EPA (Environmental Protection Agency) Test Method No. 5. A qualified independent test company shall perform testing. The test shall be conducted within 45 days of start-up, and once normal operating conditions are achieved.
- Buyer shall select an independent testing company to perform the required test but such selection shall be subject to CAMCORP's approval. Buyer shall be responsible for all testing company fees, charges and expenses.
- CAMCORP will be notified at least (1) week prior to any testing, may inspect the baghouse prior to testing, has the right to be present during testing, and will be provided with a full copy of all tests including raw data and calculations.
- At all times prior to and during testing, all specified operating conditions must be strictly adhered to.
- If the guaranteed 99% removal efficiency is not attained on the first test, CAMCORP Inc. will be given a maximum of 60 days with which to bring the equipment into conformity.
- Owner will provide, on request, applicable maintenance and operation records of actual operating conditions.
- Upon satisfaction of the emissions guarantee, CAMCORP shall have no further liability to Buyer under this guarantee.

Thank you very much Betsy. I hope this will be helpful. If I may be of any further immediate service or assistance, please do not hesitate to contact me.

Very truly yours,

CAMCORP, INC.

Tracy Janssen
Vice President - Air Pollution Control

TAJ/taj

cc: Mr. Keith Horton - CAMCORP, Inc.

CAMCORP, INC.
9732 Pflumm Road • Lenexa, Kansas 66215 • Phone 913-831-0740 • Fax 913-831-9271