Technical Guidance Committee

Meeting Minutes

Thursday, March 15, 2018

9:00 a.m. – 1:00 p.m.

Conference Room B
Department of Environmental Quality
1410 North Hilton
Boise, ID

TGC ATTENDEES:

James Craft – Onsite Wastewater Coordinator, DEQ, (TGC Chairman)
Mike Reno – REHS, Environmental Health Supervisor, CDHD
Jason Peppin – REHS, Senior Environmental Health Specialist, PHD
Kellye Eager – REHS, Director of Environmental Health, EIPH
Joe Canning – P.E., B&A Engineers Inc.
Kendall Unruh – WEB, Inc. dba Western Septic & Excavation

GUESTS:

Lisa O'Hara – DEQ, Office of Attorney General
Larry Waters – P.E., Wastewater Program Engineering Manager, DEQ
Whitney Rowley – Administrative Assistant, DEQ
PaRee Godsill – Everlasting Extended Treatment, ECP, Norweco
Norm Semanko – Parsons Behle & Latimer Attorney representing Presby Environmental, Inc.
Keith Taylor – Taylor Morgan
David Lowe – Lowridge Onsite Technologies (via telephone)
Dick Bachelder – Infiltrator Water Technologies
Jay Holman – Infiltrator Water Technologies
Lisa Bahr – Southwest District Health
Allen Worst – R.C. Worst & Company, Inc. (via telephone)
Lee Rashkin – Presby Environmental, Inc. (via telephone)
Fred Vengrouski – Presby Plastics, Inc. (via telephone)
Rich Walls – H.D. Fowler (via telephone)
Sheryl Ervin – Bio Microbics (via telephone)
Brian Iversen – Septic Filter Solutions, LLC (via telephone)

CALL TO ORDER/ROLL CALL:

Meeting is called to order at 9:00am.
Committee members and guests introduced themselves.

OPEN PUBLIC COMMENT PERIOD:

9:03 AM James Craft opened the meeting for public comments. PaRee Godsill asked to give her comment later in the meeting. James read a comment submitted by Allen Worst on March 13, 2018, via email into the minutes.

> "I would like to have the following read into public comment at the TGC meeting schedule for March 15th: Regarding the approval information provided by BioMicrobics for their effluent filters and pump vault unit, nowhere does it state the filter(s) available flow area or does it provide a way to calculate the flow area for these filters. I would like to remind the Committee that a minimum of 4 ft^2 flow area is required for a pump vault screen system, and 1 ft^2 is required for an effluent filter unit installed in the septic tank (TGM 4.19.3.4.5.a and c.). An effluent filter can include less than 1 ft^2 of flow area long as it includes a close-off feature that prevents effluent from being discharged to the drainfield... I ask the committee to please take these requirements into consideration when considering approval of these products."

MEETING MINUTES:

APPENDIX A:

9:04 AM **December 7, 2017 Draft TGC Meeting Minutes: Review, Amend, or Approve****

James Craft read Fred Vengrouski's comment in the track changes on page 6 of Appendix A.

Motion: Joe Canning moved for approval to finalize June 8, 2017, TGC Meeting minutes as amended.

Second: Mike Reno

Voice Vote: Motion carried unanimously. Minutes will be posted to DEQ's website as final within 30 days.

APPENDIX B:

9:06 AM **Infiltrator ATL Design and Installation Manual**

James Craft invited Dick Bachelder to join the table. Dick Bachelder said he worked with James Craft and Jason Peppin on the manual after the last meeting and expressed thanks for the minutes from last meeting and that they were helpful to see what needed to be addressed in the manual from the discussion. James Craft suggested we go over the manual page by page. Dick Bachelder mentioned there were two significant differences in the manual that he will point out. One of them was they raised linear ft/bedroom from 50 to 70, to be consistent throughout the country with in all states. Dick Bachelder said, "We will keep it at 70 liner ft/bedroom, I wanted to make that clear." Dick Bachelder

provided a track changes version of the manual and a final clean copy.
James Craft recommends changing the table numbers on page 3 under "System Sizing" to "Table 3" and "Table 4-22". Dick Bachelder will make those changes, and noted that track changes will affect page numbers in the final copy. James Craft noted the formatting comments on page 4 and recommended to delete the third column of the table on page 5 under "Minimum Separation Distances." Dick Bachelder asked, "If you could do multiple beds and I am asking if with larger flows we would need to come back 6 months later and use that table. Do you see situations where that would happen?" There was brief table discussion on LSAS and cumulative flows. It was decided it was okay to keep the table with an additional statement that it was not to exceed 1,500 gallons a day. It was noted that at this time the manual does not specify a maximum gallons per day. Mike Reno suggested the appropriate section might be in the pressure distribution part of the document.

Joe Canning said on page 3 it talks about square feet and there is no 1,500 gallon per day limit in the manual. The TGC members agreed. Dick Bachelder said, "To address the concern, I would suggest we could make a statement at 'Daily Design Flow' on page 3 to say '1,500 gallons per day to a given module'." Questions about the word module were discussed. Mike Reno stated, "For an LSAS they are called modules." Joe Canning wanted clarification if a module included everything (i.e., septic tank and drainfield). Mike Reno commented he does not think it would include the septic tank. Joe Canning asked if the NSF testing included the septic tank. Dick Bachelder said, "NSF 40 dictates flows of 3 times per day with a 7 day vacation. There are parameters on normal effluent". Joe Canning said he was asking because Presby system has to do with the whole thing. Lee Rashkin commented (via telephone), "Presby's certainly does include the tank. ATL has not received a scale-up review by NSF." Dick Bachelder said, "All NSF certifications are scale-up-able. I take offense to that. That isn't a true statement. Let's keep the discussion on my manual. The issue is how do we deal with a flow of 1,500 gallons per day" and brought it back to James initial concern. Jason Peppin read from the rules and mentioned we just need to keep it consistent. Kendall Unruh suggested, "Can it say specifically in the manual LSAS module." Kellye Eager suggested using the same language of the subsurface sewage disposal rules about the maximum module size. The TGC members decided on, "Max daily design flow to any ATL subsurface sewage disposal module shall be 1,500 gallons per day."

Joe Canning wanted clarification on how to size the septic tank to 1,500 gallons per day and was concerned if the NSF test was done with a certain size septic tank. Joe Canning explained that effluent needs to go through the same sort of pretreatment before it goes into the drainfield. Mike Reno shared another situation and how that was addressed through DEQ approval, in this case the pretreatment was before that module. Joe Canning agreed with Mike Reno's statement. Dick Bachelder said, "We trust the state regulations are followed until the effluent enters our system. From this point as the manufacture, we defer to the states rules before it gets to our system." Kendall Unruh said, "Your ATL system is designed to handle effluent to any standard residential system and septic tank sizing would have already been addressed in those septic systems already in place."

Kellye Eager shared a conflict with “residential” versus “commercial” wording and suggested to say “non-residential” in place of “residential” on page 5 under “Minimum System Size” to add clarity. Dick Bachelder suggested the manual could say that this is designed for residential strength wastewater on page 4 Table 3-1 and would make the change. Kellye Eager also clarified sizes for residential application in this same section, noting it should be 1 instead of 3 bedroom home.

Joe Canning pointed out that the third column heading of the referenced TGM Table 4-19 should be a greater than or equal to “≥” sign. James Craft said a new diagram was added on page 10 for “Above Grade Capping Fill System.” Dick Bachelder said, “I want to make sure there is nothing in the drawing that you don’t want to be.” The TGC members agreed it was helpful and thanked Dick Bachelder for adding the diagram. Kendall Unruh asked, “Would it be helpful in the diagram to have 12” maximum between the conduit and side wall? TGC members discussed and agreed to have 12 inches minimum inserted in the diagram between the conduit and side wall.

James Craft recommended being consistent throughout the manual on how square feet is labeled, (e.g., “sf”, “sq. ft.”, or “ft^2”). Dick Bachelder agreed to make the changes to be consistent throughout the manual. James Craft also asked that on page 16 in the section for “Bed System” to say “bed” instead of “trench.” Dick Bachelder said that was a great catch and we will fix it.

On page 20 in reference to the bed configuration design example, James Craft asked Dick Bachelder how they construct the top corners at that steep of an angle with sand. Dick Bachelder showed on the diagram that the 12 inches does not have to be expensive fill material; it needs to be this height of 12 inches out to the side and then it slopes off out 12 inches. TGC members asked about soil cover and fabric to cover materials getting into the system sand. Dick Bachelder asked that if a cover material is required that it be the same for all systems and further explained that it would increase the cost of the system for the user. Dick Bachelder suggested that the decision for soil fabric cover does not come from the manufacturer’s side, but the TGC members could decide on that now or later. Joe Canning said, “I think any drainfield should be covered whether it has drain rock or sand.” Kellye Eager also agreed and noted that was her question with the cap and fill system. Kendall Unruh said that the Presby system’s he has installed so far does not have soil fabric cover. Jason Peppin commented on another system that did not have fabric covers. The TGC members decided the ATL does not need to have the fabric material unless installed in an above-grade capping fill trench as illustrated in TGM Figure 4-6 Cross-sectional view of an above-grade capping fill trench. Dick Bachelder and TGC members were okay with the wording as-is in the ATL manual.

James Craft mentioned on page 24-25 the diagrams and pictures were clearer in the final copy. James Craft also noted that the revisions requested for pressure distribution from the last TGC meeting were added on page 25.

Mike Reno had a suggestion on the Proprietary Treatment table in the TGM. He asked James Craft if there could be something that lists minimum feet of conduit in (Table 5-15). James Craft will make edits in the comments section for linear ft/units per bedroom.

Mike Reno said this would help give clarity to field staff when installing products. Mike Reno would also like to see a section added in the TGM in Alternative System Designs section to address these standards for new systems in the future. Dick Bachelder suggested the TGC members look at Alabama's guidance on sand lined systems for a reference. Dick mentioned other states have started this and he was sure the guys on the phone and him would be happy to participate in creating that section. Lee Rashkin said he would be happy to participate to create the standard.

Dick Bachelder asked respectfully that the Infiltrator ATL Design and Installation Manual have final approved based on additional revisions requested from today and working with James Craft to make sure all things addressed are changed. James Craft said, "I want to mention here that in the future if there are any discrepancies between the ATL manual and the TGM, the TGM shall govern. This will be stated in the approval letter."

Motion: Mike Reno moved to finalize approval of Infiltrator ATL Design and Installation Manual pending edits approved by James Craft.

Second: Kellye Eager

Voice Vote: Motion carried unanimously. Final approval and letter will be issued to Infiltrator based on the revisions and discussion today.

APPENDIX C:

10:10 AM **Lowridge LOWeFLOW Treatment System Design Manual for Idaho and Sampling Plan**

- Review manual and sampling plan for final approval.

James Craft invited Dave Lowe to the table. Dave Lowe said he had nothing specific to discuss but will answer any questions; he is seeking final approval with the revised manual. TGC members decided to go through the manual page by page.

James Craft asked to make a change on page 3 to say "$CBOD_5$" in the first line instead of BOD. Dave Lowe agreed. Dave Lowe asked in section Tanks if the formatting here was clear. The TGC members agreed it was okay. Jason Peppin asked for clarification on the 4:1 recirculation ratio on page 3. James Craft explained the ratio was not changed because of Joe Canning's comment in last TGC meeting relating this system to a black box and that it was tested at 4:1. TGC members agreed not to change the ratio.

Appendix B: Dave Lowe discussed the "Design Parameters" section on page 5 and asked if there were any issues there. James Craft asked how "emergency storage" is defined. Mike Reno asked what percentage would Dave Lowe interpret that to be? Dave Lowe said, "75% of design flow, and that he used 2 times design flow." Mike Reno said, "2 times design flow would be good and to keep it consistent throughout." Dave Lowe then said, "In that same line I will change it from 80% to 150% of design flow." TGC

members agreed on the change.

Section Tanks: Joe Canning had a comment on the bottom of page 3 in the “Tanks” section regarding the settling tank 1,000 gallons. TGC members discussed and decided to strike out “1,000 gallons” and to include the IDAPA rule reference for minimum tank capacities.

Appendix A: James Craft referred to the bottom of page 4 under “Media” and asked if the tote bags came with the system. Dave Lowe explained the tote bags come on the pallet with the system and the nearest distributer will be located in Meridian, ID.

Mike Reno asked if the timer settings were preset when they ship the unit. Dave Lowe replied that the timer settings are factory pre-set and also referred to the table in Appendix D of the manual under Timer Settings for Recirculation for more information.

Joe Canning asked if they were using a check valve on the pump. Dave Lowe mentioned they certainly can and that the kits come with it. Joe Canning asked about winter conditions or freezing relating to the check valve. Dave Lowe referred to the drawing on page 2, and said, “The only thing we ran into with freezing is when people leave on vacation and turn the system off and then it can break.” Jason Peppin suggested changing the Figure 1 on page 2 to a single compartment septic tank to be consistent. Dave Lowe mentioned the inside of the control panel door has several instructions and detailed stickers with information about the system. TGC members agreed with proposed changes.

James Craft mentioned that these require a service provider to come out, and asked Dave Lowe if he required specific training. Dave Lowe said, “There is training, we have online videos. I will have them for Idaho like I have them for Washington. Once the installer finishes the videos, they call me and I get them on a list.” James Craft recommended stating the manual requires a licensed Idaho complex installer and specific Idaho Lowridge training. Dave Lowe said he will add these requirements for who can install in the introduction section. Dave mentioned that his issued training certificate says they have taken Lowridge’s specific training but they need to still take the state specific certifications or training. James Craft suggests to state on the certificate how long the training is valid for and to expire certificates on Dec 31st. Dave Lowe said he could do that for the Idaho list and would work with James Craft on the language for this requirement.

Mike Reno asked what material covers the LOWeFLOW unit that’s featured on the front page of the manual. Dave Lowe explained the cover material options and that there was little concern for rain fall effecting levels. Cover materials are addressed on page 3 as well as in the training videos. Mike Reno agreed with Dave Lowe’s explanation.

James Craft asked how often the Growstone media needed to be changed out. Dave Lowe explained the Growstone media should last the life of the house and more about what might happen or accumulate. Dave Lowe further explained that there is nothing in there that would degrade and has not had any issue since using the media.

Mike Reno said it should be addressed somewhere that it needs a drainfield, as well as the credits and criteria sizing requirements. Dave Lowe and James Craft will work on adding that requirement in an appendix.

TGC members discussed the sampling plan. Mike Reno asked where the samples results go. James Craft said they go to the health departments and DEQ gets a courtesy copy. Mike Reno said, "As a permittee we would put sampling is required for TSS and $CBOD_5$ for those 30 systems." James Craft asked the committee for questions and concerns on the sampling plan. No other comments were given. James Craft said, "To review what we discussed, this product has preliminary approval from the last meeting and now there are a few additional edits suggested today. Mike Reno commented that the edits today are pretty minor.

Motion: Mike Reno moved to finalize approval of Lowridge LOWeFLOW Treatment System Design Manual for Idaho and Sampling Plan pending edits made today and approval from DEQ.

Second: Joe Canning

Voice Vote: Motion carried unanimously. Final approval and letter will be issued based on edits and discussion today. DEQ will work with Dave Lowe on edits suggested today.

James Craft added, "Along with final approval, in the future if there are any discrepancies between the Lowridge LOWeFLOW manual and the TGM, the TGM shall govern."

- Comparison of TGM sand mound requirements vs. OSCAR requirements

Dave Lowe submitted a letter to DEQ on January 29, 2018 that gave side-by-side comparison on a mound system and OSCAR system. TGC members reviewed the comparison:

In section 4.24.2 on the last row, James Craft mentioned he would like to see more information about the Bioline tubing used for drip tubing. Dave Lowe explained the tubing and emitter spacing. James Craft suggests adding the reference to TGM Table 5-11 listing this tubing's material and specification. Dave Lowe will get the piping specifications.

In section 4.24.3 Dave Lowe mentioned the big difference is the sand cover. TGC members discussed the terms "medium sand" and "ASTM C-33 sand" were not synonymous and Mike Reno said to use "medium sand".

In section 4.24.3.1 Dave Lowe mentioned they would use either one of the coils from the first row. He also said they were keeping with "2 rows of 5 feet of coil" instead of the "1 row of 7 feet of coil" required.

In section 4.24.3.2 the TGC members discussed observation ports and the necessity of

putting them in. Dave Lowe, Mike Reno, and Joe Canning agreed there would not be a point to having observation ports. Dave Lowe mentioned that after a lawn grows on top of the system, lawn mowers can actually drive over it. Joe Canning asked about rainfall on the system. Dave Lowe mentioned he has not seen a problem with rainfall. Joe Canning asked, "If they have fenced them off the system for an interim period?" Dave Lowe said, "They do not fence it off and we have not had any problems or complaints with animals or other disturbances. The novelty wears off quick and they usually leave it alone." Joe Canning asked, "How much of a slope would they put on this system?" Dave Lowe said, "Up to 20% and the coils would be laid flat. Regarding the 24 inch shoulder in a mound, it is measured from the edge of the tubing, and the design manual has a table for referencing." For the side slopes, Dave Lowe said, "They use 1:1 slope because shallow sand calls for that for drawing purposes." Joe Canning shared his concern with the sand sluffing off before the sand hardened and because of a narrow shoulder and side slope. Dave explained constructing the shoulder space area and that a shallower slope can be constructed.

In Section 4.24.3.3 TGC members asked about how system is covered with soil. Dave Lowe said, "Some have formed it out with soil above the sand for aesthetic purposes." Joe Canning asked, "If you did go to a 3:1 side slope would you still use the entire footprint?" Dave Lowe said, "The length of unit is greater, but the width shrinks down. It is probably somewhat more of an academic discussion," he shared one situation that might affect it. Joe Canning and Dave Lowe agreed on the discussion.

Dave Lowe explained what happened during NSF testing and that the key is distribution, volume, and dosing frequency. They have no problems with septic tank effluent to the system. The key is to keep the filter clean; we fixed the issue of cleaning that filter. Also the same principle of drip systems is carried forward. They are using a 90 times per cycle for back flushing." TGC members discussed system functions for backflow and headworks cleaning and cycles. Dave Lowe said this manual will be addressed further at the next meeting in June 2018.

11:21 AM **James Craft called for a 10 minute break**

11:32 AM **Meeting resumed**

James Craft reminded the room to pick up a RCAC flyer about the Idaho State Revolving Fund – Household Septic System Program by the sign in sheet and asked for everyone to distribute them. *NOTE: A copy of RCAC flyer is available at the end of meeting minutes.*

APPENDIX D:

11:32 AM **Eljen Corporation – A42 Gravelless Sand Filter Proprietary Approval Request**

James Craft said this item on the agenda will be tabled until next TGC meeting in June 2018 due to Jim King's cancelled flight.

APPENDIX E:

11:34 AM **Bio-Microbics Effluent Filters Approval Request**

James Craft invited Keith Taylor to the table and asked him to introduce the products. Keith Taylor shared and discussed the product brochure and passed a document to the TGM members. Keith Taylor said, "We are seeking approval, I am looking to see what is required as this is the first time it is up for approval." James Craft referred TGC members to TGM section 4.19 "Dosing Chambers" where requirements are stated for effluent filters. Keith Taylor mentioned he wasn't sure of any filter that can go 4 plus years between cleanings and was not sure on the square footage specifications but he would find that information. Mike Reno said a couple screens are 3/8 inch. Keith Taylor agreed, that once you get up to 1,000 gallons per day they are at the 3/8 inch size. James Craft clarified that those holes are larger than what TGC would allow. Keith Taylor said, "The products SNT416 and SNT418 are what would like to see approved. Other larger items up to 3/8 inch would have to be engineered in." Joe canning said, "The SNT618 would also meet requirements. What I see missing is the surface area. Do any of these have a closing valve when you pull it out?" Keith Taylor said they do not. Joe Canning said, "Approval is specific to these requirements."

Keith Taylor showed in the brochure in a pump product that has the concept of lifting out handles that cleans the filter like a squeegee without having to get into the pump vault. Keith Taylor mentioned this product saves someone money and time to be able to do the cleaning service themselves.

Joe Canning asked, "Does the bio setup have an adapter ring?" Keith Taylor said it did. James Craft said, "It seems like a good product with everything but the surface area of the screen is unknown. James Craft instructed Keith Taylor to submit the missing surface area measurement and TGC could revisit this product approval request at another meeting.

APPENDIX F:

11:52 AM **Septic Filter Solutions, LLC Approval Request**

Brian Iversen (via phone) requesting approval for Treit Inc filter models. Examples of EF-2530, & EF-2540 (w/cap) filters were on the table. James Craft referred to page 3 of 45 of the Appendix F and explained the filter design requirements as previously mentioned. James Craft said, "We are looking for 144 square inches (1 square foot) of screen surface area. The filter models here have 60 square inches. This doesn't meet the TGM requirements. Are the filters able to be modified to meet these requirements?" Brian Iversen said, "We could increase the length potentially, but that could limit the septic tanks that it could be used in." James Craft said, "I am not familiar as to which septic system designs are tall enough to fit the modified filter." Brian Iverson said, "I can look at which septic tanks it would fit into and resubmit." Kendall Unruh suggested to Brian Iverson that the filter design could incorporate a close off feature. James Craft said, "We

can't approve the filters as they are today, but if there is a tank on the approved septic tank list in the TGM, we can revisit this approval request if the filter fits." Brain Iversen said thank you.

12:00 PM **Break - Lunch (1 hour) - SKIPPED**

12:00 PM **SSD Program Update:**

a. Permits by the Number;
b. Preliminary Approved Septic Tanks
    - Norwesco Low Profile Septic Tank
    - Roth Multi Tank
    - Hunter Septic Precast Concrete Tank
    - Robertson Manufacturer Precast Concrete Tank
c. TGM Section 3.2.8.1 Drainfield Aggregate and Construction Media Approval Process
    i. Approval Process Clarification
d. TGM Section 1.5.1 Installer's Registration Permit and Service Provider Certification Application, Bond, Fee, Training, and Exam
    i. Service Provider Certificate Clarification
e. TGM Section 7 Rules and Codes
    i. TGC to discuss proposed edit to simplify section.
f. TGC to discuss developing guidance on distances from gravity effluent pipes and pressurized effluent pipes to features of public water system and other water lines.
g. Provide update on management tool for tracking annual reports and service providers.

James Craft shared a PowerPoint presentation to address the above items and is included in the minutes. TGC members discussed the following slides:

Slide 10, Norwesco Septic Tank: Jason Peppin stated he has offered to go and perform the leak test at Norwesco in a parking lot above ground. Norwesco declined the offer. Panhandle Health District has had two disapprovals on these tanks because the leak test was not completed. Jason Peppin commented that these tanks on the preliminary approval list should not be sold and put in the ground before the leak test. This is something that Panhandle Health District runs into often. Larry Waters commented, "Preliminary approval means it meets the TGM requirements but still needs the leak test." Mike Reno said, "When the health department sees them they are already in the ground." Joe Canning suggested, "Maybe we word it differently than 'preliminary approval'." Kellye Eager said, "I think the health districts just want to see the final approval list." Kendall Unruh said, "Maybe specify in the letter what approval means and ask not to sell until the hydrostatic leak test is completed."

Slide 20, TGM Section 1.5.1: PaRee Godsill asked first, "Is the exam open or closed book for the service providers and complex installers exam?" James Craft said, "I am okay with it being open book, I will make that clear in the study guide." PaRee Godsill asked her second question, "Some health department's require certificate from the

manufacture before the exam, and some say you can provide it later. I would like that to be clarified," she added a section from the TGM. James Craft said, "I will leave it up to the health districts for how they administer the test." PaRee Godsill said, "It doesn't make sense to need to have the manufacture's certificate. I ask that certificates from the manufacture from group trainings or from other states not be accepted. They shouldn't be able to present that as an individualized manufacturer certificate when it is a state certificate." James Craft said, "We can modify the certificate when they come back with new certification." PaRee Godsill said, "Don't you think it would be beneficial to have two separate lists? Norweco has come back and denied some installers," she continued to explain. James Craft said, "We can't force people to become complex installers." PaRee Godsill said, "As a manufacturer we only have one to choose from, then Norweco said no, now we can't install Norweco." Jason Peppin mentions, "Panhandle Health District has had a couple people express interest in becoming complex installers. They are interested in the process, then going out and contacting the manufacture." James Craft referred to TGM section 1.10.1, and stated, "If manufacturer is in business we need to see training from them. I understand there are some systems out there lingering. We do want more service providers, but we have to follow the rule." Kellye Eager said, "We might need to change the TGM then." PaRee Godsill stated, "I would like to see the same letter that was sent to me sent to the manufacture and would like to be cc'd on it. Would I be cc'd on the letter?" James Craft said, "I will if it is appropriate."

Note: PaRee Godsill provided clarification to her above comments during the June 7, 2018 TGC meeting minutes review period and are included as Appendix G.

Keith Taylor explained the situation with approval for Bio-Microbics and not approved for the other system with Orenco. He said, "Where did I become disqualified, when I became a distributer for Bio-Microbics? I think we need to have it (the reason for disqualification) written and based on something stated." James Craft said, "In the rules endorsement comes from the manufacture, it is a 2 part approval system from DEQ and the manufacturer." Keith Taylor said, "Manufacturers don't really know what is going on in the field but moreover, the distributers actually do." James Craft said, "The direction needs to come from the manufacturer." Keith Taylor asked if anyone at the table had additional comments on it. Mike Reno said, "We can't control what the manufacturer is telling to the distributer. If the manufacturer is limiting the number of service providers, they need to get a letter from James stating they cannot limit providers or they cannot sell." PaRee Godsill comments again that they need more people to become complex installers. Joe Canning said, "Can't a distributer be a provider? I don't see why not? It could be an immediate fix that a distributer becomes one themselves." Jason Peppin said, "That is the issue that we come to that they are denied because they distribute for someone else." PaRee Godsill stated, "That is the problem, and I am not getting any phone calls for people to become complex installers." Larry Waters said, "The whole reason we did this was to give owners more options, and not have manufactures limit the market. If we aren't getting that then we might need to make changes. It was intended to get more options to the home owners." James Craft said, "I will take these comments into consideration."

Slide 22, TGM Section 7 Rules and Codes: TGC members discussed and decided it was

okay to delete the Rules and Codes listed on the slide in the TGM and keep the hyperlinks only to the Rules and Codes.

Slide 24, Developing guidance for separation distances from effluent pipes to potable water source: Kellye Eager received an email from Ed Marugg, Environmental Health Director with Public Health –Idaho North Central District on February 21, 2018 and read it into the minutes:

> "Kellye,
>
> You are on the TGC correct? Would it be possible to request that somewhere in the guidance section that the distances from gravity effluent pipes, and pressurized effluent pipes to features of PWS and other water lines be added? There is some mention in the rule section about separation distances but if it could be added somewhere in the guidance, I think that would be beneficial. This question comes up periodically here, and we have a recent example of a mobile home park served by a PWS with a proposed pressurized sewage line (grinder pump transport to the septic tank) passing water lines and the well. Was confusing and it might be nice to have that referenced in the guidance section. Ed."

Mike Reno said, "We require 50 feet sewage transport line separation, which conflicts with plumbing code requirements and IDAPA Rule. Joe Canning said, "I come across that often with engineers." TGC members discussed the conflict. Larry Waters said, "Maybe this needs to be changed on our next MOU revision with the plumbing bureau." James Craft said, "We would have to re-visit the MOU between DEQ and the plumbing program."

Slide 25, OnlineRME update: Mike Reno asked if effluent testing still comes in by mail. James Craft said, "We would have to coordinate with OnlineRME to not have annual reports marked completed until the sample has been processed and received at the health district. We would address the mail fraud issue that way." James Craft said action items would be to propose a section in the TGM that explains the annual reporting process, but he would like to get accounts set up first with the health departments to see how it works.

On-Site Wastewater Program Update

1

TGC MEETING
3/15/2018

Agenda

2

- Permits by the Number
- Preliminary Approved Septic Tanks
- TGM Section 3.2.8.1 Drainfield Aggregate and Construction Media Approval Process
- TGM Section 1.5.1 Installer's Registration Permit and Service Provider Certification Application, Bond, Fee, Training, and Exam
- TGM Section 7 Rules and Codes
- Develop guidance on distances from gravity effluent pipes and pressurized effluent pipes from PWS
- OnlineRME update

Permits by the Number

3

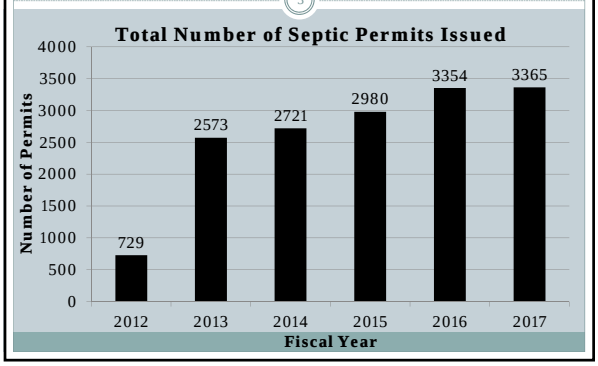

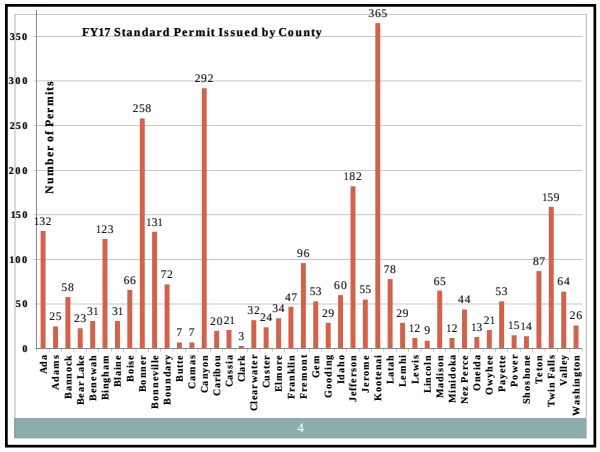

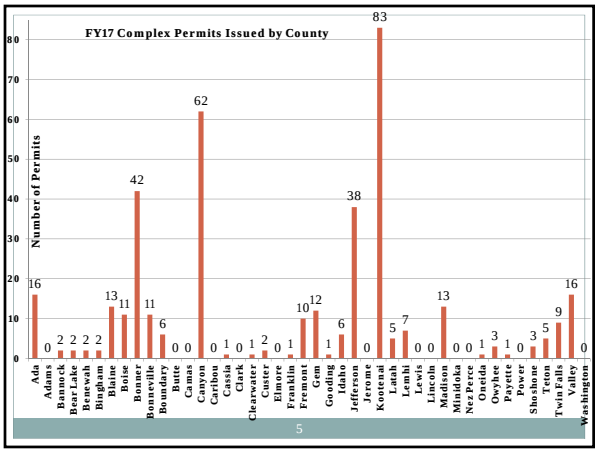

Permits by the Number

6

Number of permitted septic tank pumpers and SSD system installers by health district in FY 2017.

Health District	1	2	3	4	5	6	7	Totals
Pumpers	13	9	20	14	13	13	17	**99**
Installers	144	75	100	100	77	53	96	**645**

Permits by the Number

7

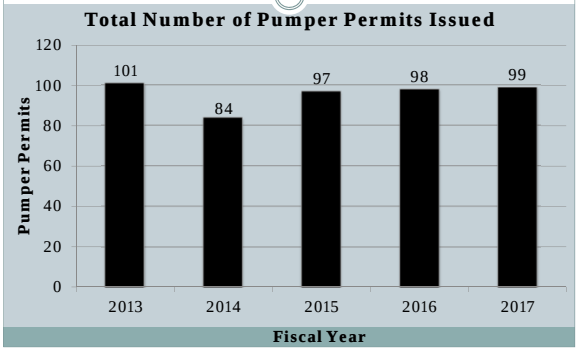

Permits by the Number

8

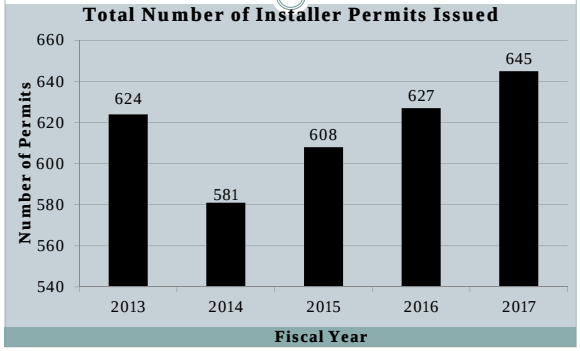

Permits by the Number

9

Number of Large Soil Absorption Systems permitted within each health district.

Health District	1	2	3	4	5	6	7	Total
Permitted LSASs	69	5	24	12	5	8	15	138

Preliminary Approved Septic Tanks

10

- Polyethylene, 1 or 2-compartment, one-piece low profile septic, green
- Approved 8/17/2017
- 3 foot bury depth
- 1 or 2-compartment

Volume	Burial Depth
1,000	3 feet
1,250	*3 feet*
1,500	3 feet

Preliminary Approved Septic Tanks

11

Roth Multi Tank – March 27, 2017

Model	Compartment
RMT-500	One
RMT-750	One/Two
RMT-1000E	One/Two
RMT-1060	One/Two
RMT-1250	One/Two
RMT-1500	One/Two

Note: Roth HDPE, single compartment tanks are already approved in TGM Table 5-1 Approved septic tanks

Preliminary Approved Septic Tanks

12

Hunter Septic Tanks – March 21, 2017

- Non-traffic rated
- 1,000 gallon
- Precast concrete
- 1 compartment.

Blackfoot, ID

NOTE: Hunter Septic Tanks with **2 compartments** are already **approved** in TGM Table 5-1 Approved septic tanks.

Preliminary Approved Septic Tanks

13

Robertson Manufacturing Tanks – January 18, 2018

- Precast Concrete
- One compartment
- Non-traffic rated

Robertson Mfg. INCORPORATED

Hyde Park, UT

Volume	Burial Depth
1,000	8 feet
1,500	8 feet
4,000	4 feet

Vault Toilet

- 1000 gallon
- Precast concrete
- March 14, 2018

UBC PRECAST PRECAST CONCRETE PRODUCTS

14

Preliminary Approved Septic Tanks

15

- Post list of preliminary approved tanks on DEQ's website?
- Send a memo to health districts and regional offices

TGM Section 3.2.8.1 Drainfield Aggregate and Construction Media Approval Process

NSF

16

- NSF 40 certification requires system sand that meets ASTM C-33 requirements.
- Health Districts maintain a list of approved aggregate suppliers for ASTM C-33.
- If no list exists, the burden falls to the installer to prove sand used meets ASTM C-33.
- Automatic Disapproval if ASTM C-33 was not used in an alternative system or proprietary product that required it.

TGM Section 3.2.8.1 Drainfield Aggregate and Construction Media Approval Process

NSF

17

- ASTM C-33 or Concrete Sand
- Required for in-trench sand filters, sand mounds, intermittent sand filters, & NSF 40 products
- Less than 2% passes through a #200 sieve for cleanliness.

Sieve Size	Passing (%)
4	95–100
8	80–100
16	50–85
30	25–60
50	10–30
100	2–10
200	<2

Media & Aggregate Approval

18

- Free of fines
  - If it looks dirty or questionable it is likely not free of fines and may be rejected by your EHS

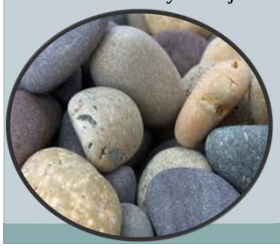

Media & Aggregate Approval

19

- Not free of fines

TGM Section 1.5.1 Installer's Registration Permit and Service Provider Certification Application, Bond, Fee, Training, and Exam

20

- **TGM 1.5.1. no. 5.**

The applicant seeking certification as a service provider shall also provide annual documentation of manufacturer-specific training, as required by IDAPA 58.01.03.006.06.a.

- **IDAPA Rule 58.01.03.006.06.a**

Obtain documentation of the completed manufacturer-specific training of each manufactured and packaged treatment system for which the service provider intends to provide operation, maintenance, or monitoring. Proper documentation includes a certificate or letter of training completion provided by the manufacturer. If a system manufacturer is no longer in business, that manufacturer-specific training is not required.

TGM Section 1.5.1 Installer's Registration Permit and Service Provider Certification Application, Bond, Fee, Training, and Exam

21

- Manufacturer may extended/validate their certificate for up to three (3) calendar years.
- Manufacturer Certificate date range should expire at the end of calendar year.
  - 3/15/2018 through 12/31/2020
  - Need new certificate from manufacturer for 1/1/2021 renewal.
- A valid manufacturer certificate on file allows for issuing annual service provider certificate from health district.

TGM Section 7 Rules and Codes

22

Section 7. webpage links to Rules and Codes

- Individual/Subsurface Sewage Disposal Rules (IDAPA 58.01.03) **Updated 7/1/2017**
- Rules Governing the Cleaning of Septic Tanks (IDAPA 58.01.15)
- Idaho Code Title 39, Chapter 1: Environmental Quality–Health
- Idaho Code Title 39, Chapter 36: Water Quality
- Idaho Code Title 50, Chapter 13: Plats and Vacations

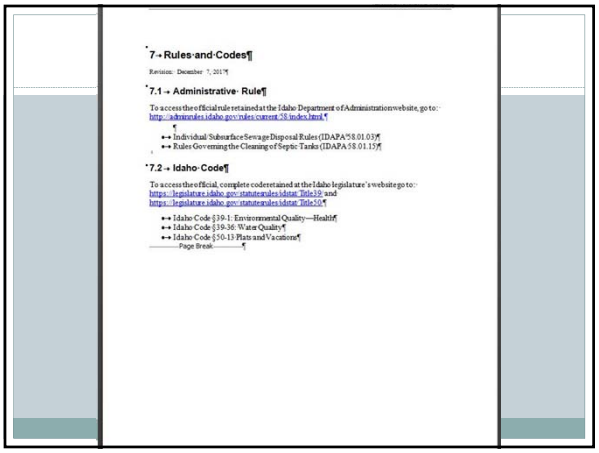

7 Rules and Codes

Revision: December 7, 2017

7.1 Administrative Rule

To access the official rule retained at the Idaho Department of Administration website, go to:
http://adminrules.idaho.gov/rules/current/58/index.html

- Individual/Subsurface Sewage Disposal Rules (IDAPA 58.01.03)
- Rules Governing the Cleaning of Septic Tanks (IDAPA 58.01.15)

7.2 Idaho Code

To access the official, complete code retained at the Idaho legislature's website go to:
https://legislature.idaho.gov/statutesrules/idstat/Title39/ and
https://legislature.idaho.gov/statutesrules/idstat/Title50/

- Idaho Code §39-1: Environmental Quality—Health
- Idaho Code §39-36: Water Quality
- Idaho Code §50-13 Plats and Vacations

Develop guidance on distances from gravity effluent pipes and pressurized effluent pipes to PWS

24

- Idaho Standards For Public Works Construction
- Standard Drawing No. SD-407
  - Potable and Non-Potable Water Line Separation figure
- See IDPWC 2015 Pages 285, 286, 295

OnlineRME update

25

- Health Districts are onboard with using OnlineRME
- Any compatibility issues with IT departments?
- Coordinate with OnlineRME to create accounts
  - Determine which inspection questions to ask
  - Update TGM to explain new annual reporting format
  - DEQ - Public outreach letter to property owners
  - Start up instructions for health districts and service providers

Next June 2018 Meeting?

26

NEXT MEETING:

12:58 PM Schedule Next Meeting

James Craft scheduled the next committee meeting for June 14th at 9:00 AM to 1:30 PM depending on the number of agenda items. Meeting start time can be tentative due to flight schedules. It will be held at the Idaho Department of Environmental Quality's state office.

Motion: Mike Reno motioned to adjourn meeting.

Second: Kellye Eager, Joe Canning

Voice vote: Motion passed unanimously.

1:00 PM **Meeting Adjourned**

List of Appendices

Appendix A – TGC Meeting Minutes from December 7, 2017
Appendix B – Infiltrator ATL Design and Installation Manual (revised 2018)
Appendix C – LOWeFLOW Treatment System Design Manuals for Idaho and Sampling Plan (revised 2018)
Appendix D – Eljen Corporation – A42 Gravelless Sand Filter Installation Manual
Appendix E – Bio-Microbics Effluent Filters
Appendix F – Septic Filter Solutions, Treit filters
Appendix G – PaRee Godsill Meeting Minutes Clarification.

Begin and end time will be observed. Agenda items and their allotted times my vary dependent upon the amount of interest and participation for each item.

** Agenda appendices are color coded to track changes. Blue text indicates changes that were made in previous Technical Guidance Committee (TGC) meetings. Red text indicates changes that are newly proposed for this TGC meeting. All green text indicates text that was moved from one area of a section to the new area. All text with strikeout markings regardless of color is either proposed to be deleted from the guidance or moved to another location within that section.

The call in number is (208) 373-0101 Bridge # 2 (9:00 AM – 1:30 PM)

To Join a Conference Call

1) Auto-Attendant Transfer Option

Conference Call Auto-Attendant Number:

- Extension 0101: Inside DEQ phone system
- (208) 373-0101: Outside callers

Participants call auto-attendant number and are then prompted to enter their pre-arranged conference call bridge number and in this case press the number ***2***. Once the bridge number has been entered, callers are automatically connected to their conference call.

Notification

As participants are added to a conference call, an audible chime is heard by participants already connected to the call. If the conference is in progress when the chime is sounded, it is advisable to acknowledge the new participant and ask who has joined the call. This will ensure that the new caller has gained access to the proper call.

WebEx Instructions

To Join WebEx

This will allow users joining the meeting via online video conference to view the same computer material that the subcommittee members are seeing at the meeting location. To hear audio users will still need to call the conference call number above from their telephone. Login information is below.

1) Visit the Website Below
https://idahodeq.webex.com/idahodeq/j.php?MTID=m63b32ca249d50e387e4b27dfa44e7063

- Meeting number: 807 707 909
- Meeting password: TGCMeeting

Audio connection: To phone in please call into Bridge #2 by dialing # (208) 373-0101 Opt 2.

RCAC
www.rcac.org

Idaho SRF/Household Septic System Program

Low interest rate loans/grants available to refurbish or replace individual septic systems!

Program Requirements:

- Residence must be in a rural area, town or community in the state of Idaho with a population not exceeding 50,000.
- Applicants must own and occupy the home served by the septic system to be renovated or replaced.
- New home construction and systems serving other than the homeowner occupied dwelling are not eligible.
- Households with annual income not exceeding $49,174 are income eligible for loan assistance.
- Households with annual income not exceeding $24,587 are income eligible for grant assistance.
- System renovation or replacement must require a permit and the work must be performed by a licensed contractor.
- The homeowner's property will be encumbered by a Deed of Trust for loans and a Grant Lien Agreement for grants.
- Maximum amount of assistance - $15,000
- Associated loan costs estimated not to exceed $600, e.g., credit report, recording and RCAC loan fee are applicant expenses and can normally be included in the loan or grant.

Grant Terms:

- 10 year compliance period with 10% annual forgiveness, repayment required in full if property is sold or transferred within first 5 years from project completion.

Loan Terms:

- Interest rate - 1%
- Maturity may not exceed 20 years
- Repayment required if homeowner vacates home

For information/application please visit *www.rcac.org* or contact:

Cyndy Elliott, Loan Officer
Rural Community Assistance Corporation (RCAC)
7201 Dusty Lane
Modesto, CA
celliott@rcac.org (209) 576-0430 or (209) 402-4342

EQUAL HOUSING LENDER

**This loan/grant program is supported by a grant from the Idaho Department of Environmental Quality.*

2/5/2018

Appendix A

TGC Meeting Minutes from December 7, 2017

Technical Guidance Committee

Meeting Minutes

Thursday, December 7, 2017

9:30 a.m. – 2:30 p.m.*

Conference Room C
Department of Environmental Quality
1410 North Hilton
Boise, ID

TGC ATTENDEES:

James Craft – Onsite Wastewater Coordinator, DEQ, (TGC Chairman)
Mike Reno – REHS, Environmental Health Supervisor, CDHD
Jason Peppin – REHS, Senior Environmental Health Specialist, PHD
Kellye Eager – REHS, Director of Environmental Health, EIPH
Joe Canning – P.E., B&A Engineers Inc.

GUESTS:

Lisa O'Hara – DEQ, Office of Attorney General
Larry Waters – P.E., Wastewater Program Engineering Manager, DEQ
Whitney Rowley – Administrative Assistant, DEQ
PaRee Godsill – Everlasting Extended Treatment, ECP, Norweco
Norm Semanko – Parsons Behle & Latimer Attorney representing Presby Environmental, Inc.
Keith Taylor – Taylor Morgan
David Lowe – Lowridge Onsite Technologies (via telephone)
Dick Bachelder – Infiltrator Water Technologies
Dale Atkinson – Atkinson-Jet Septic
Allen Worst – R.C. Worst & Company, Inc. (via telephone)
Lee Rashkin – Presby Environmental, Inc. (via telephone)
Fred Vengrouski – Presby Plastics, Inc. (via telephone)
Ashley Garrison – Presby (via telephone)
Jason Henderson – Geomatrix, LLC

CALL TO ORDER/ROLL CALL:

Meeting is called to order at 9:33am.
Committee members and guests introduced themselves.

OPEN PUBLIC COMMENT PERIOD:

9:34 AM James Craft opened the meeting for public comments. No public comments were given at this time.

MEETING MINUTES:

APPENDIX A:

9:35 AM **September 7, 2017, Draft TGC Meeting Minutes: Review, Amend, or Approve**

James Craft stated two revisions were requested by Fred Vengrouski's and are dictated as JC1 and JC2 in Appendix A. Kellye Eager asked if the JC1 comment was actually made. James Craft asked Dick Bachelder (sitting in the audience) for comment and Dick Bachelder commented that it was most likely said, but it was a misstatement and has no problem with it being in the minutes.

Norm Semanko (via telephone) expressed appreciation on capturing the discussions well in the previous minutes. Specifically well captured was Mike Reno's response to comments on the ATL discussion, as well as the discussion regarding the comment letter submitted by Gerald Williams. Norm Semanko asked if those two previous discussions would be discussed later on today. James Craft said the Gerald Williams letter would be discussed later.

Allen Worst (via telephone) commented on removing "not" from the minutes discussion on the LOWeFLOW in two places. James changed the minutes to reflect Allen Worst's request.

Motion: Joe Canning moved to finalize June 8, 2017, TGC Meeting minutes as amended.

Second: Mike Reno

Voice Vote: Motion carried unanimously. Minutes will be posted to DEQ's website as final.

APPENDIX B:

9:42 AM **Technical Guidance Manual (TGM) Section 4.8.2. Approval Conditions**

James Craft mentioned no other changes were submitted and no public comments were received in regards to section 4.8.2 Approval Conditions.

Motion: Kellye Eager moved to finalize approval of TGM Section 4.8.2 Approval Conditions.

Second: Jason Peppin

Voice Vote: Motion carried unanimously. Section 4.8.2 Approval Conditions will be updated in the TGM and posted to DEQ's website within 30 days.

After the vote: Allen Worst commented via telephone that a letter from Jason Peppin does not reflect the finalized language. Jason Peppin clarified what was said in his letter. Mike Reno mentioned in the past Barry Burnell sent a letter out saying that ETPS products total nitrogen approval for 27 or 27.9 mg/L are the same. Mike Reno and James Craft clarified that approved ETPS at anything less than 27 mg/L total nitrogen require sampling. Jason appreciated the clarification to ensure consistency. Kellye Eager mentioned that the table shows the less than ("<") symbol and suggested to match the previous language for consistency. James Craft made a note in the text of TGM Section 5.13 Total Nitrogen Reduction Approvals to change the "<" to "less than" to reflect the discussion.

APPENDIX C:

9:48 AM **Infiltrator ATL Design and Installation Manual**

James Craft invited Dick Bachelder to join the committee members at the table. Jason Peppin asked to start with Infiltrator's responses submitted. Dick Bachelder said, "For this meeting he tried to address the 31 open items from last meeting. First, the issue with the length of sand extensions on page 3 the 12 inches was taken care of throughout." Second, the NSF/ANSI Standard 40 – Infiltrator ATL-450- Pressure Distribution letter dated November 30, 2017 at the end of the packet was discussed amongst TGC members.

Dick Bachelder said, "We are open to input on language making sure lateral distribution is introduced correctly and end caps are cut correctly for the lateral." Joe Canning asked if the hole at the end was at the bottom and Dick Bachelder confirmed it was. James Craft stated the orifice holes need to point up. Dick Bachelder confirmed they would add language to ensure holes in the lateral distribution are pointed up and the hole at the end cap is at the bottom.

Joe Canning asked if they were going to put in sweeps for pressure testing. Dick Bachelder, "Now we go into the definition as what pressure distribution is for the states and we would refer to the TGM." Joe Canning commented that the lateral piping would be incased in a 4 inch pipe (ATL bundle) and that you cannot visually verify the pressure test. Mike Reno and Joe Canning commented on the pressure testing procedures. Dick Bachelder asked for more clarification on the discussion. TGC members further explained pressure testing in the field and the need for sweeps. Jason Peppin would send Dick Bachelder addition language and information to be incorporated in the manual.

James Craft asked Dick Bachelder to include the section titles after TGM section numbers due to section numbers having the possibility to change during TGM revisions.

Joe Canning asked Dick Bachelder about the dosing the system with 25% of the daily design flow. Dick Bachelder mentioned it was a maximal, they try to limit at 25%

because of capacity of the proprietary product. Joe Canning discussed that in a pressure distribution system it has 4, 5, or 6 doses a day. Joe Canning said, “I would say max volume is 1/5 (20%).” Dick Bachelder will revise the manual and change to 20% of the daily design flow.

Dick Bachelder said, “On page 4 for item 19 a paragraph was added about distribution boxes and that he would add the title to this TGM section 3.2.5.2 as well.” Jason Peppin questioned using the word ‘shall’ in relation to a distribution box; the language being limiting. Jason Peppin commented that in his district they have seen problems with that being the only option, specifically on a slope system. Jason Peppin proposed ‘is recommended’ instead of shall. Dick Bachelder agreed to make the change.

Dick Bachelder mentioned a table on vertical separation was added in the manual. James Craft noted that the table reference of 4-18 should be corrected to TGM Table 4-19 Recirculating gravel filter vertical separation to limiting layers (feet). All items from Infiltrator’s letter had been discussed and Dick Bachelder suggested to now go through the manual page by page.

Jason Peppin asked Dick Bachelder for clarification on questions about the loading rate. Jason Peppin stated, “The discussion on a three bedroom application numbers, as bed numbers go up that loading rate number goes smaller. As far as soil types A and B the system would be oversized and that C soil types would be conservative. Jason Peppin stated he liked this approach.

Dick Bachelder took time at this point to remind everyone about the difference in the ATL specification as compared to other products and that approval includes 12 inches of sand. He mentions they built-in a significant safety factor in regards to the treatment perspective. Dick Bachelder continues, “Systems aren’t by nature competitive in trench application, other systems in the field might be more affordable in trench applications. It is the footprint piece that drives these.” Mike Reno states, “It is the limiting layers which would drive these.” Dick Bachelder said, “These are pretty much maintenance free if you take care of the septic tank.”

Lee Rashkin (via telephone) commented on minimal pipe length. Lee Rashkin states, “Presby requested approval at 30 linear feet per bedroom. We were denied on that approval. Presby is testing at a more aggressive rate 3 gallons per foot, and they had to follow what other states did. It seems like 50 feet per bedroom is based off our Presby’s data, not other states. Tyler Fortunati (DEQ former On-Site Wastewater Coordinator) asked to change it to 50 linear feet... I don’t believe Infiltrator has that type of support for their request.” Dick Bachelder replies to Lee Rashkin’s comment, “We do not have other approval at 50 feet per bedroom. I am a fan of what has happened in the past. I am about fairness. If that is something that the committee is wanting and there is validity behind that, we are okay with that. As far as field data, we have provided DEQ with testing done in late spring. It is up to the TGC to see if that is robust enough. ETPS provisional protocol is complex enough. We think the proprietary wastewater treatment product approval is appropriate for the ATL

system." Mike Reno and James Craft mentioned we do not do things a lot of other states do.

Joe Canning commented on how the manual reads and recommended putting the table listing the application rates in the introduction to the system. Dick Bachelder agreed it was a good suggestion and will move the table for soil loading rates under system sizing. Kellye Eager asked where the soil rates came from and Jason Peppin clarified.

Dick Bachelder handed out a study titled "Results of a Pilot Protocol for the Evaluation of Fabric-Wrapped Leaching/Treatment Technology" by the Massachusetts Alternative Septic System Test Center dated February 2011 to the TGC members. Dick Bachelder discussed it was a study on Advanced Drainage System (ADS) products called EZ Flow and they were looking at different ways of testing percolate from the trench. He shared the product construction and installation of this study and highlighted results from a table from the study in the letter to the TGC. Dick Bachelder read a couple paragraphs on page 16 from the Discussion and Conclusions section. Dick Bachelder commented what ADS learned from this study of comparing two different systems, was that the sand was doing the treatment work. Dick Bachelder continued to read on page 17, stating, "There are two plausible hypotheses to explain the statistical similarity between the fabric-wrapped and the pipe-in-stone systems. Either the twelve inches of stone aggregate in the pipe-in-stone systems has treatment equivalent to the fabric-wrapped pipe itself, or the six inches of ASTM C33 sand common to both systems accounts for the majority of the treatment in both cases." Dick Bachelder said, "I ask you to strongly consider that when putting any system against the ETPS approval protocol."

Lee Rashkin commented, "Based on that logic if someone brought you a 6 inch pipe…you would approve it based on that the sand does all the work and the lack of accumulation. Ultimately we have known the sand does treatment but longevity of system testing needs to happen. Presby was required to provide performance data. As to fairness and consistency done before, the same should happen now." Mike Reno asked if lysimeter data was provided. Lee Rashkin continues to comment, "I have to respectfully disagree, our performance results are exceptional and that is why we have 10 years of patents and experience."

Dick Bachelder commented that the Infiltrator ATL approval is with 12 inches and not 6 inches of sand. Dick Bachelder expressed it is an unnecessary cost and burden for an applicant to show in-field results." James Craft comments, "I don't have any reason to decline the approval request based on the testing and field data Infiltrator submitted under confidentially."

More discussion occurred between TGC members, Dick Bachelder and Lee Rashkin about the previous comments and how Tyler Fortunati accepted Presby's approval. It was decided that James Craft would review how Tyler Fortunati accepted the Presby system. Jason Peppin asked if what was submitted for Presby fell into the provisional lines. James Craft said, "These are two different products, I don't know how we can compare them." Dick Bachelder said, "The other manufacture was approved in a Canadian province for monitoring. There isn't TSS and $CBOD_5$ data that is in a sand

filter. One of our obligations here is to represent people in Idaho who pay for these systems. It is unreasonable to be compared to ETPS system parameters." Mike Reno said, "These do differ from traditional sand filter designs Idaho has approved, I can't recall when we looked at Presby if it was under ETPS process or the single sand filter process."

TGM Section 1.4.2.4 Proprietary Wastewater Treatment Product Approval Policy was put on the screen for TGC members to read and review. Jason Peppin mentions it also talks about single sand filters above this section. James Craft said, "For TSS and $CBOD_5$, I don't think it is necessary to go through three full years of operational data for evaluation." Mike Reno said, "We wrote this section for Presby approval because they didn't fit into the box." Lee Rashkin mentioned, "Presby was asked for performance data in the field or 2 years testing." James Craft said, "Right, but here we are imposing additional sand requirements. We are not going under the provisional approval route; we are going under proprietary approval." Lee Rashkin comments, "I respectfully disagree with that for what we had to do. Dick Bachelder said, "It is difficult for a manufacture to invest money in order to create a market, Infiltrator knows that as well." Mike Reno said, "I think that proprietary approval process we have now, we have to follow that process for products submitted now." Lee Rashkin replied, "I strongly encourage maintaining consistency." James Craft said, "I am following the rules stated in the TGM." Lee Rashkin said, "I have letters from DEQ requiring that from us. I don't know how DEQ could only require that from us."

The TGC decided to move on to page 3 where James Craft asked for an editing change to be made to "IDAPA". On page 5 under system configuration James Craft asked, "What is the minimum ATL for 1 bedroom; sometimes we have a rare situation like this." Dick Bachelder said, "It is a minimum of 100ft." Jason Peppin said, "That makes sense to me as far as tying it to standards and testing numbers from larger bedrooms." Kellye Eager stated, "I think you need to decide if going on 50 or changing to the 70." Mike, Jason, and James agreed to stay at 50. Kellye Eager said, "As long as it is very clear that we are going by your manual."

Dick Bachelder said Infiltrator would be willing to go to 70 feet per bedroom as it was NSF tested and certified.

James Craft asked Dick Bachelder for a clearer trench configuration diagram on page 7. Dick Bachelder explains the difference between the two system diagrams and placement of sand. Mike Reno mentions on page 7 the plan view does not match the six foot wide trench. Dick Bachelder agreed and said it was a single plan. He also said he would enhance the resolution on the plan view diagrams on pages 7 and 8.

On page 9 James Craft clarifies a few system design requirements and then asks that the example on page 12 round up the ATL conduit length to 90 feet because the ATL conduit cannot be cut and comes in 10 foot lengths. Dick Bachelder agreed that was a good pick up and will adjust this on the design examples.

On page 13 discussions occurred for option III. Jason Peppin said it was very site specific. Mike Reno said the field personnel can figure that out.

Joe Canning asked, “If there was any cover material over the sand.” James Craft said the manual talks about a cover. Dick Bachelder said, “Our system stops at the sand then we go back to the manual.” Mike Reno clarified, “So your system doesn’t have sand on top of pipe, the other system has 3 inches, just for clarification.” Dick said, “Right.”

Dick Bachelder explains why the system was tested without venting. He said yes to Joe Canning’s question asking if you can you put these in a serial installation. Joe Canning asked, “Is serial installation on a hillside or a flat. I am worried about bypass coming out of the top of the pipe and short circuiting the sand, particularly in A-soil types.” Dick Bachelder said, “How high do you raise it is the question, are you loading conduit to the max and creating head as you go up the slope? It is a design system call or a health district call; not Infiltrator’s call?” Jason Peppin stated, “Part of the problem is DEQ is not requiring a designer requirement and that health districts do not go into this amount of depth analysis on the design.” Dick Bachelder said, “What I am hearing is that you are looking for manufacturer support to lower variables. I propose to leave the piece on installation instructions as-is, but in the front of the manual add a section for this and reference page 25.” He proposed language to add and the TGC members agreed.

Mike Reno asked, “Has the use of these types of systems in the cap and fill systems been resolved?” James Craft said, “It has not, it is in progress of being resolved.” Dick Bachelder adds, “Infiltrator supports requiring an engineer to design these systems.” Lee Rashkin replied, “Presby wouldn’t support that. Dick Bachelder’s letter says the systems are simple…” Dick replies, “Design is anything but simple.” Lee Rashkin said, “In the letter on the second page you state the systems could not be more simple.” Dick Bachelder said, “I will send a note to James regarding that change.”

James Craft said, “Any other comments on the manual. I think we need to see a revised manual with the edits discussed today.” Joe Canning asked James Craft if a field performance report was submitted. James Craft stated, “DEQ has received a confidential report.” Dick Bachelder said, “I think the TGC members should see that.” James Craft said, “Internally I reviewed it and saw that it was good. I need to check with distribution policy before sending that out to TGC.” Lee Rashkin commented on the September 15th letter from DEQ saying, “Presby was not granted six inches of sand approval, but the 12 inch approval. We were denied that approval. The data submitted by Presby needs to be looked at.” Dick Bachelder replied, “There is nothing in the TGM that says an applicant has to follow a previous applicant. I would respectfully propose a motion to approve the Infiltrator manual with the revised edits.” Jason Peppin comments, “Presby is referencing the letter in 2015 but TGC didn’t have this TGM section until 2016.”

Norm Semanko said, “There were several discussions in the last meeting minutes regarding that. (Norm Semanko reviewed/read the letter) It sounds like James did that.” James Craft said, “Yes that was done internally.” Mike Reno comments, “The level at which it needs to be required for approval was discussed that it is the current section of the TGM.” Dick Bachelder said, “The first person in is deeply vetted, yes.

You, the TGC, went as far as creating another section in the TGM anticipating other applicants." Mike Reno said, "Regarding to the first unit and the amount of being vetted and other systems after that in the past, it is a process. I agree the first system is deeply vetted. TGC did not have the means to adequately vet the Presby system so additional sections were given to fit Presby in." Lee Rashkin comments on the detail of vetting Presby went through before approval. Mike Reno replied, "We have the template now as far as the proprietary sections for products that come in now. We have to use that." Dick Bachelder said, "I would appreciate motion for approval process for the Infiltrator manual with the edits today."

Lee Rashkin said, "You are comparing 50 linear feet with Presby's 50 linear feet." Mike Reno said, "We are basing 50 linear feet with loading rates based on NSF testing." Lee Rashkin said, "I don't believe you are." Dick Bachelder said, "Jason just articulated we are not basing this product on any other system's product. What no one can say is how long these things will last. That is not what the NSF Standard 40 test for." Lee Rashkin said, "I don't know where 50 feet comes from unless basing it under our product." Dick Bachelder commented, "It is math." Lee Rashkin asked for explanation on how the math was done. Dick Bachelder said, "Our application is not predicated on anyone else's use." Lee Rashkin said, "Where did the 50 feet and 12 inches come from then?" Dick Bachelder said, "50 feet is math, 12 inches is from the TGM." Mike Reno restates comment. Lee Rashkin said, "We have letters from DEQ. It is all predicated based on our field history." James Craft said, "I don't have a reason to change from 50 to 70." Lee Rashkin said, "There is no field data for that, by Dick's statement there isn't data for 50 feet anywhere in the world." Mike Reno reads TGC policy in section 1.4.2.4. Proprietary Wastewater Treatment Product Approval Policy. Lee Rashkin said, "I believe DEQ would be in a tough position based on the letters they sent us." Mike Reno said, "Whether it was 50 feet or 30 feet it would still have to meet soil application rates. If you want to resubmit under these conditions you are more than welcome to do that and we would look at it." Lee Rashkin said, "I take a bigger issue with that on a DEQ level. I object on a level of maintaining consistency." Mike Reno said, "This policy was not in place when your product was put up for approval. We created this policy so we could be consistent in going forward. If you think your product will benefit from this policy for 30 feet then resubmit it." Jason Peppin stated, "We are still tying it to soil rates." Mike Reno and James Craft said this was a preliminary approval not a final approval based on edits discussed today pending a revised design manual. Dick Bachelder said, "James I will provide a draft to you with changes." James said he would review it and send it to TGC for review as well.

Motion: Mike Reno moved to approve for preliminary approval based on edits today and submitted manual for final draft.

Second: Jason Peppin

Voice Vote: Motion carried unanimously. James will distribute the revised Infiltrator Design and Installation manual draft to TGC.

11:40 AM **James Craft called for a 10 minute break**

11:50 AM **Meeting resumed**

APPENDIX D:

11:50 AM **OSCAR LOWeFLOW Treatment System Design Manual for Idaho**

James Craft asked for any general comments on the LOWeFLOW. Dave Lowe said, "At the last meeting the OSCAR LOWeFLOW was submitted as one. Now they are separated and we are requesting two separate approvals." Jason Peppin asked, "Is the request for approval as a provisional ETPS system." James Craft asks for TGC guidance as for what approval the OSCAR system would be considered as. Jason Peppin and Kellye Eager suggested that it be put in the manual what approval it was seeking.
James Craft started with a question on page 3 of the LOWeFLOW manual. He asks about the first paragraph and a sentence that seemed to be cut off. Dave Lowe said, "Grammatically we can write that differently. It is a carryover from the previous section." TGC and Dave Lowe discussed the disposal method and agreed it should be timed dosed specifically to Idaho. Also that it could say timed dosed or gravity fed. Dave Lowe and James Craft discussed they could work together and make those edits based on the comments today and proposed edits. James Craft continued with another edit on page 3 in the Drip Tubing Network Layout section with the 4:1 ratio versus the TGM recommendations. Dave Lowe said, "It is a matter of changing the default timer settings. It was tested at 4:1, so we used that." Joe Canning said, "I guess we need to discuss if we need to do that. I look at it like a black box section. It tested at 4:1, leave it at that." Dave Lowe and James Craft agreed.

Mike Reno asked a question based on the tank section numbers and the TGM guidelines for a 500 gallon tank. Mike Reno suggests referencing Idaho rules there. Joe Canning asked. "For a smaller home is it harder to go below 1000 gallons?" Dave Lowe stated, "From our standpoint we would always want the minimum to be 1000 gallons. We could put an asterisk by that number and reference the Idaho state minimum tank size."

Dave asked the TGC, "Does it make sense for emergency storage? I can clarify that for Idaho." Mike Reno said, "Idaho's tank size requirement is twice the daily flow." Mike Reno said, "The discharge tank would be like a pump chamber and would be twice the daily flow. The recirculating tank is whatever you specify. The clarifier tank is required at twice the daily flow." Dave Lowe asks what the flow would be for a four bedroom home. Mike stated, "It is a 600 gallon tank." Dave Lowe replied, "I have no problem doing that."

Joe Canning asked questions on Figure 1 on page 2 and why it did not show the discharge tank like it is shown on Figure 2. Dave said, "We did put ' discharge tank not shown' in the Figure 1 description. I can make both the same if needed. I am happy to make one figure and combine those two for clarity." Jason Peppin asked, "In a gravity situation would a third tank be involved?" Joe Canning asked, "What volume of tank are we looking for here." Dave Lowe said, "I will make a figure or a

statement to make it clearer as for permitting in gravity applications as Jason suggested."

Dave Lowe was able to clarify a question Joe Canning had regarding filter sizing and number calculations on page 3. Joe Canning asked, "Is the 500 gallons per day flow due to coil limits?" Dave Lowe said, "Washington state requirements is 480 gallons per day for a four bedroom so we upsized it to 500 gallons. It was to our advantage to minimize critical mass. We are comfortable with the 500 gallons per day minimum for applications." Joe Canning commented, "Is testing valid for flow not by the size/number of bedrooms?" Dave Lowe replied, "We don't mention bedroom size numbers in the manual only flows, so if the TGM changes for bedroom sizes I am covered."

James Craft asked for any other comments. James Craft said "We are not seeking a nitrate reduction on this," in reply to Mike Reno's question. Kellye Eager asked, "Is there a sample plan requirements for these?" James Craft said, "We have it at the very end of the packet. Since the first round of sampling was at the end of the monitoring year I ask that you send the health departments and DEQ a copy of the testing results data."

Dave Lowe mentioned Terry Tucker (third party effluent sampler) agreed to do the sampling and asked about the chain of custody rules from the lab to the requested recipients of the data results. James Craft said, "The lab would send you the report and you could email it to us, the lab doesn't need to send three verified copies." Dave Lowe clarified, "The locals want the maintenance report and data in the annual reports." James Craft agreed and he would like to look at it as well to help keep track of the timeline for the provisional approval process.

James Craft added that in the sampling TGM section 1.9.2 Managed Monitoring it needed to have the title name (items g and 6-c). Mike Reno noted that number '5' was also needed at the top of this section. Kellye Eager also noted other number and lettering sequence issues. James Craft said he would make those edits with Dave Lowe.

Kellye Eager asked a question in the section starting with "procedure to correct failing effluent sample…." She said, "Regarding the 2 consecutive samples, it is stricter than what we require in the TGM." James Craft said, "Our requirements are a minimum of one sample per monitoring period. It is up to you, Dave, what you do with the number of samples above that." Dave Lowe said, "If TGC is satisfied with one sample I can go down to that." James Craft agreed and noted the TGC would certainly accept more data points.

Mike Reno read from the TGM 1.4.2.2.2 General ETPS Approval regarding the general ETPS approval to answer a question from Dave Lowe. James Craft said, "We would need 3 full monitoring periods." Dave Lowe said, "I may need to pull a paragraph out here for less confusion. I will go ahead and do that. I will add page numbers as well."

Joe Canning asked, “How does it do for nitrate reduction?” Dave Lowe said, “That is our next step we would be looking at in the future.” James Craft asked for any other comments.

Motion: Mike Reno moved to approve for preliminary approval with edits noted today during this meeting and treatment plan as well for provisional approval.

Second: Joe Canning

Voice Vote: Motion carried unanimously. The LOWeFLOW installation manual and sampling plan are preapproved for preliminary ETPS approval.

12:36 PM **Lunch Break (1 hour)**

1:33 PM **Meeting Resumed**

James Craft asked if the LOWeFLOW O&M manual would need approval. Mike Reno stated he did not think we have approved these manuals before. James Craft said he would work with Dave on a question in this O&M manual.

OSCAR Treatment System Manual:
James Craft said, “I understand Dave is seeking provisional approval on this.” Dave Lowe said, “The title page really should say ‘A Disposal System’ supporting a treatment system. The effluent of 40mg/L $CBOD_5$ and 45 mg/L TSS 45 is what we would be going for. We just completed testing using septic tank effluent we just don’t have the results yet.” Jason Peppin mentioned that this would then be a disposal only. James Craft said, “I am not sure what the process would be for an alternative design on a disposal drip system. How do we approach the product for use in Idaho?” Mike Reno said, “Everything here shows it as an above ground disposal. Drip requirements are 6-8 inches below grade. So this is not a treatment, definitely as disposal type system.” Jason Peppin also agreed. Kellye Eager then asked, “Do we have an idea of how others got approved?” Mike Reno said, “It is 2 square foot area of disposal, but buried. This is shown above ground and does not meet our requirement there.”

Dave Lowe said, “I can come back with NSF testing data and submit as a treatment unit at-grade or above-ground. Would that change how you could approve that? It would be both a treatment and disposal unit. We are waiting for the lab to get results in. We could come back at the March meeting with a new proposal.” Mike Reno asked what quality of effluent was used in testing. Dave replied, “Septic tank 100 mg/L CBOD, 75 mg/L TSS for final treatment of disposal.” Joe Canning asked, “Is the only pretreatment the septic tank.” Dave said, “Yes.” Joe continued, “I don’t know where you head with this and keep it at an above ground system.” Dave said, “I guess past experience in Washington State for the past 2 years.” Mike Reno said, “I guess it depends if sand does the treatment or an intermittent sand filter.” Jason Peppin states, “Under the proprietary wastewater section in the TGM it might not fit.” Dave Lowe said, “I will have data to share in a couple months.” Mike Reno commented, “In September we were looking at one unit and the OSCAR being the disposal unit, now the OSCAR being separated doesn’t make sense in how to look at it.”

Joe Canning said, “A bunch of coils as a system would take up a large square foot footprint. The application and effect to nature soils is important.” Dave Lowe said, “There are 2 application rates, 1) tubing to the sand and 2) the sand to the soil. Looking at soil type in the TGM it is 300 gallons per day system in A-2 or C-1 soil types. Same system but the sand basal area is larger to compensate for the receiving area.” Jason Peppin said, “So you end up in finer texture areas where you would add more coils?” Dave Lowe replied, “What we would do is add more coils based on design flow.” Joe Canning asked about elevated systems in testing, such as mounds. Dave Lowe replied, “We built the OSCAR on top of pea gravel and had collection in the under drain,” he continued to explain more. Joe Canning said, “In extreme situations there are different application rates for native soils and sand. Is there a separation requirement for coils?” Dave said, “Yes.” Joe Canning continued, “It looks like a cap and fill system above grade and just commenting on the effect on nature soils.”

Dave Lowe asked, “If we left the LOWeFLOW and OSCAR combined would that change how you review it?” Mike Reno and Joe Canning said, “I don’t think it would.” Dave Lowe asked, “What the TGC was feeling at this point? Do we wait for the NSF data or are we back at the same place as of now?” James Craft said, “With NSF testing would it be treatment along with disposal?” Joe Canning said, “I don’t think treatment would be a question, just how the TGM would qualify disposal.” Mike Reno said, “The basal area would have to meet soil distribution rates.” Dave Lowe said, “I will do more homework to identify the dots to be connected here. The concerns of infiltration rates into soils, they had the same questions in Washington State. We used different criteria to approve the OSCAR.” Dave Lowe confirmed Joe Canning’s question that when testing was done it was just the sand. Joe Canning said, “My gut indication is to put at least 3 inches into the native soil.” Dave Lowe commented, “Yep, I would call it raking and end up with a series of micro furrows and sand on top of that.” Jason Peppin recommend Dave Lowe to look at the TGM to review our sand mound sections.” Dave Lowe said, “I do have information and videos on our website that might be helpful to committee members.” Joe Canning asked about 1:1 slope ratio and had concerns about the interim before stabilizing with vegetation.

Jason Peppin asked, “What slope limit is this in Washington State?” Dave Lowe said, “20% on mounds, a steeper slope with more sand fill.” Joe Canning comments, “I am interested in seeing the size of these. I am not sure they can compete against our sand mounds. It is more an economic question.”

Dave Lowe responds, “I am not able to answer your questions on TGM and request to table this till next meeting with results on data and what we are seeking for approval.

Motion: Mike Reno moved to table the review until the next meeting

Second: Joe Canning

Voice Vote: Motion carried unanimously. The review of the OSCAR is tabled till next meeting in order to meet the TGM requirements.

2:06 PM **Gerald R. Williams Engineering Letter dated June 6, 2017**

James Craft read the following statement:

An action item from the last TGC meeting on September 7, 2017 was for DEQ to check with the engineering board on whether engineering lines were being crossed when designing a drainfield with the Presby AES system. DEQ contacted and discussed the topic with James Szatkowski, Deputy Director State of Idaho, Board of Licensure for Professional Engineers and Professional Land Surveyors.

James Szatkowski states in his email "Based on your TGM and TGC's interpretation of what is involved in the use of this product, I personally would agree that an engineer is not required. "The TGM does not require a license professional engineer for this particular design. Inspections are required by the local health district prior to covering up the system to ensure proper installation of the Presby AES system. Some of the alternative or large systems are required to be designed by an Idaho professional engineer. Generally the criteria that require professional engineering design is if the system is experimental, requires the use a pump or is a large soil absorption system."

James Craft reiterated comments made by Joe Canning, Mike Reno, and Kellye Eager during the September 7, 2017 TGC meeting generally agreeing that engineering was not required. Given the comments made by TGC and considering Presby's response letter addressing the concerns outline in Mr. Williams letter, James Craft recommended to the committee to not impose additional engineering requirements to the Presby AES system when installed in Idaho.

Motion: Joe Canning motioned for the chairman's recommendation.

Second: Kellye Eager

Voice Vote: Motion carried unanimously.

2:10 PM **SSD Program Update**

a. **Public outreach letter to notify property owners about service provider list:**
James Craft mentioned the letter was sent out and we had many letters returned to the state office. Those were distributed to the districts to update and resend. Mike Reno said, "Out of the sent letters that came back we updated those and around 250 of those letters came back again. We got it all figured out, fixed addresses and sent out again."

b. **Service Provider list status:**
James Craft showed the most current list of all the service providers. More service providers were added to the list since the initial mail out of the public outreach letter.

Jason Peppin asked, “Regarding the Service Provider list, with our specific endorsement (i.e. Delta), are they put on the list if they as the provider are currently not working with approved manufactures, even though Delta Whitewater units are currently suspended and not on our approved list?” Mike Reno suggested, “They could be put on the list but leave the manufacture column blank for now.” James Craft asked Jason Peppin to send the list of names to be added to the list.

c. **Complex Installer seat replacement. Jason Holms’ appointment expires Jan 2018:**
James Craft said, “Jason Holmes appointment as an installer on the TGC board expires January 18th. We are looking for a replacement and asking for those interested to send a letter of interest to DEQ for review and consideration. Ideally we would like all districts to be represented. Right now districts 2, 3, 5 and 6 are not represented. A tentative closing date for a letter of interest would be by February 28, 2018.” Mike Reno said, “My recommendation would be to get anyone we can get to be a long-term active participant.” Jason Peppin asked, “What about an installer who covers multiple areas.” James Craft said that would be acceptable.

d. **ETPS Annual Reporting Recommendation:**
James Craft shared his PowerPoint presentation on OnlineRME – Management tool for tracking ETPS and Service Providers

OnlineRME

Environmental Management Tool

Service Provider Annual Reporting Issues

- No standardized annual report
- Actual service reporting is spotty
- Lots of letter-writing and phone calls when reports are pass due
- Owners don't know what they're getting for the $$

Buried in Paperwork

1800 systems x 1 inspection x 2 pages per inspection =

Ongoing Issues

Illegible writing!

- Handwriting not always readable
- Sometimes unclear what passed
- Manual data entry
- Lack of automation
- Mailing addresses not current
- Lots of individual letter notifications
- Time intensive review

What Do We Need?

Stakeholder input:

- Paperless (or as near as we can get)
- Automated, as much as possible
- Customized reports for each type of ETPS
- Adaptable to new technology
- Easy to understand, easy to use
- Provide useful information to all users
- Issue upcoming work reports, warnings letters, NOVs.
- Accessible from the field
- Low cost

OnlineRME™ RESPONSIBLE MANAGEMENT ENTITY

- Environmental Management for ETPS and Service Providers
- Main interaction is via the website
- Cloud based and can be accessed via any internet connection
- OnlineRME uses a linked server connection to pass property and inspection data back and forth.
- Used in neighboring counties in Washington, Oregon, & Montana

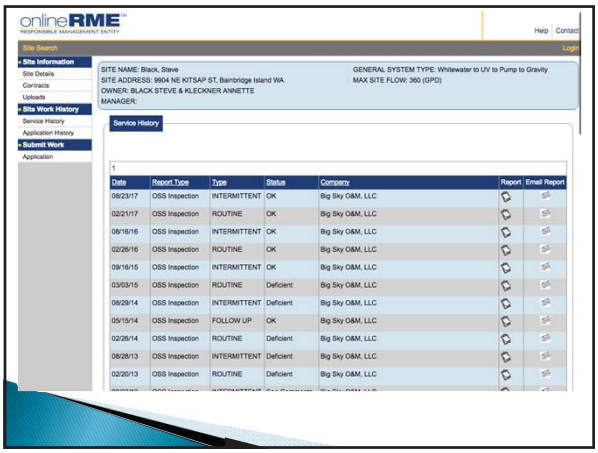

System can retrieve/link information and documents from other databases

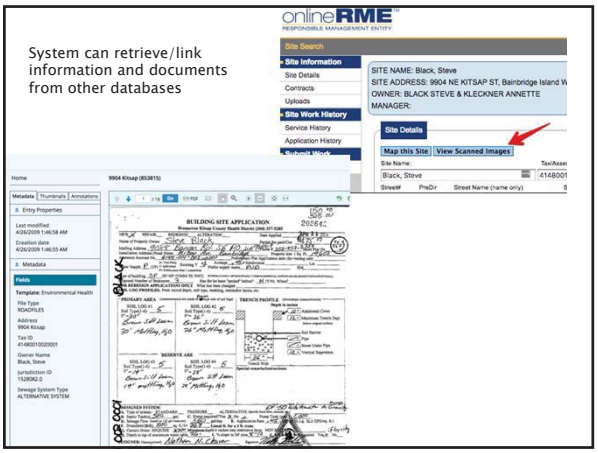

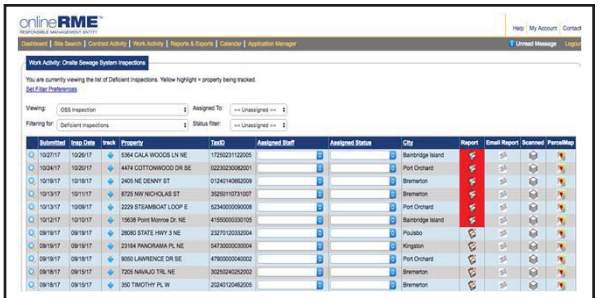

Here is where all of the reports come in and they are prioritized based upon what you want to see. Critical violations at the top – think surfacing effluent. That way you can see what needs to be fixed first.

Custom Checklist for Each System

- All questions that are deficient can be identified as critical, PASS, FAIL – that is a custom setup.
- 600 question bank to customize
- Manufacturer specific questions that are for each proprietary technology
- Add other custom questions

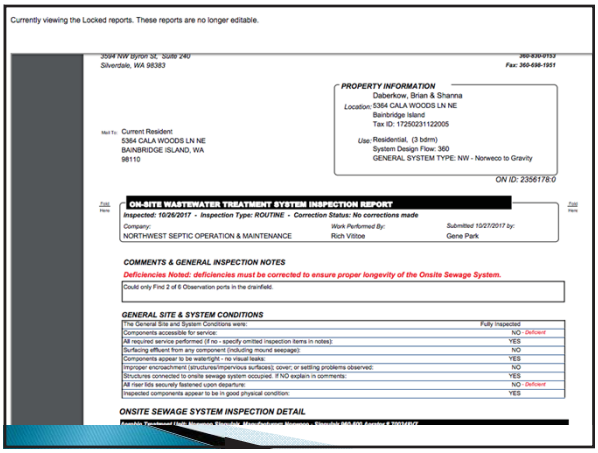

Service Providers and regulators can make notes about phone calls, letters sent. Items entered by the HD/DEQ would be public record. Items entered by the Service Provider other than notes to regulator are viewable by only the Service Provider.

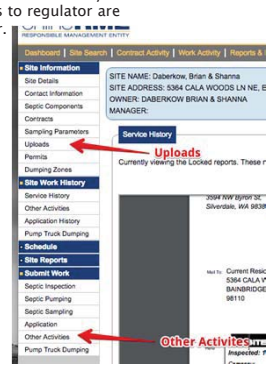

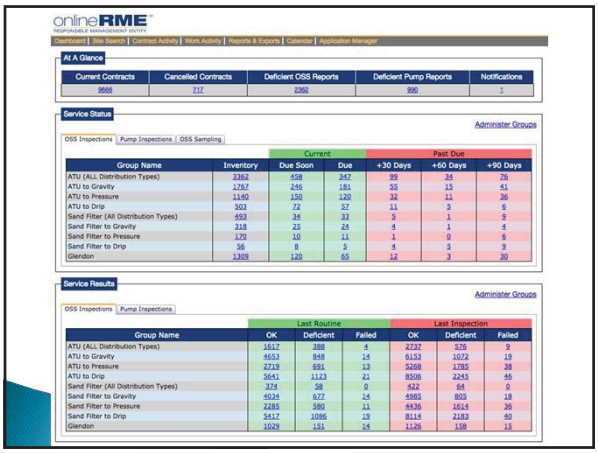

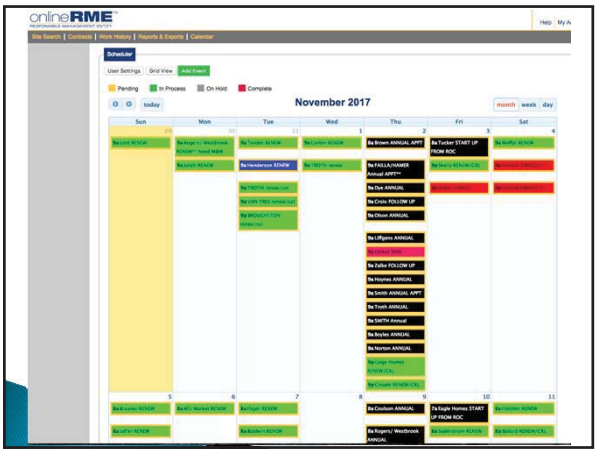

Low Cost

- $3.00 per submission of annual report, pumping or sampling event.
- Follow-up fees for inspections are waived if there is a paid report submitted within the last 6 months.
- Want to encourage reporting.
- There are no other fees. No setup fees, no support fees, no customization fees.
- Customize Customize Customize

Questions or Comments?

Mike Reno asked, “Who types the address in? We need information to give to our IT department in order for it to be okay for someone to access our database.” James Craft said, “You can set up user rights for different areas.” Mike Reno asked about submitting sample data. James Craft said, “It can be scanned and put in a report.” Mike Reno said, “We require everything to come in by mail to avoid fraud; it cannot be hand delivered. Would this still count under that rule in order to comply with prosecutable law for false reports submitted by hand delivery?” James Craft said he would check on that through the AG’s office.

Keith Taylor asked, “Can an electronic version be sent where it automatically uploads?” James said, “Yes”. Keith Taylor commented he liked that. Mike Reno said, “I like it that all reports are consistent.” Kellye Eager suggested we look at this at a future meeting where we could present it our directors.

All members of the TGC would like a copy of the presentation sent to them to take to their IT departments and check on requirements to access their databases.

Joe Canning asked, “Does the software check a submittal to see if there are errors?” He notes that service providers could change often. Jason Pepping states, “This would help resolve issues and manage reports from multiple service providers.” Joe Canning clarifies that the responsibility of submitting the annual reports is on the land owners. James Craft said, “Yes, and the service provider would then go in and enter in the report.” Mike Reno clarified that the home owner could not go in later to change the information and then resubmit it. James said, “That was correct.”

NEXT MEETING:

2:41 PM **Scheduling Next TGC Meeting**

James Craft scheduled the next committee meeting for March 15th at 8:30 AM to 1:30 PM depending on the number of agenda items. Meeting start time can be tentative due to flight schedules. It will be held at the Idaho Department of Environmental Quality’s state office.

Keith Taylor asked, “As a service provider, when we see something that has been negligent, maybe from a previous inspection from another provider, what is the process for reporting that?” Mike Reno said, “If the homeowner refuses to fix the negligent action then report it to the health department.”

Motion: Mike Reno motioned to adjourn meeting.

Second: Kellye Eager

Voice vote: Motion passed unanimously.

2:46 PM **Meeting adjourned.**

List of Appendices

Appendix A – TGC Meeting Minutes from September 7, 2017
Appendix B – TGM Section 4.8.2 Approval Conditions
Appendix C – Infiltrator ATL Design and Installation Manual (revised Nov 20, 2017)
Appendix D – OSCAR & LOWeFLOW Treatment System Design Manuals for Idaho and Sampling Plan (revised January 2018)

Appendix B

Infiltrator ATL Design and Installation Manual (revised 2018)

Design and Installation Manual for the Infiltrator ATL™ System in Idaho

Infiltrator ATL System in Idaho	
INTRODUCTION	2
STATE-SPECIFIC INFORMATION	3
SYSTEM CONFIGURATIONS	~~5~~6
DESIGN EXAMPLES	~~10~~9
INFORMATION FOR SYSTEM OWNERS	~~17~~18
INSTALLATION INSTRUCTIONS	~~19~~20
WARRANTY	~~22~~23

The purpose of this manual is to provide the minimum specifications for design and installation of the Infiltrator ATL (Advanced Treatment Leachfield) System in the State of Idaho. All local ordinances, requirements, and procedures must be followed. Each revised version of this manual supersedes the previous version.

The systems presented in this document are common configurations and are provided for illustrative purposes. They are not intended to restrict the use of other configurations.

IDAHO

For more detailed design and installation information, please contact Infiltrator at 1-800-221-4436.

INTRODUCTION

The Infiltrator ATL System
The Infiltrator ATL System (ATL System) is a patent-pending, proprietary system consisting of six components. Upon entering the ATL System, septic tank effluent progresses through each component as follows:

- nominally 12-inch-diameter conduit
  - 4-inch-diameter pipe
  - large-diameter synthetic aggregate
  - coarse geotextile
  - small-diameter synthetic aggregate
  - fine geotextile
- 12-inch depth specified system sand

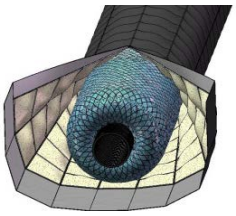

System Sand
"System sand" is the term used to describe the specified sand material that is placed between, beside and below and the ATL conduits. Acceptable system sand shall be material that conforms with the description of "medium sand" as specified in Section 3.2.8.1.2 of the Technical Guidance Manual.

The following minimum system sand dimensions are required for all ATL System configurations:

- 12 inches below the ATL conduit rows;
- 12 inches between adjacent ATL conduit rows;
- 12 inches beside (outside) any ATL conduit row with no adjacent ATL conduit row; and
- 12 inches extending beyond both ends of the ATL conduit rows.

There is no minimum requirement for system sand on top of the conduit rows

SYSTEM CONFIGURATIONS

The ATL System is certified by NSF International as complying with NSF/ANSI Standard 40 for the production of Class I effluent. As a result of this certification, the ATL System is approved for use in the State of Idaho as a Proprietary Wastewater Treatment Product (PWTP) by the Water Quality Division of the Idaho Department of Environmental Quality (DEQ) in accordance with Section 1.4.2.4 of the Technical Guidance Manual (TGM). The DEQ approval allows for design and installation of the ATL System in the State of Idaho in accordance with the specifications and instructions in this manual. If design, installation, operation, or maintenance specifications are not specifically addressed in this manual, relevant requirements in the current edition of the TGM shall be applicable.

This Manual is intended to provide system design, installation, and use information to the users in Idaho, including system designers, local health officials, system installers, and system owners. Illustrations presented in this manual are common configurations and are not intended to restrict the use of other configurations.

Daily Design Flows

Daily design flows shall be in accordance with IDAPA 58.01.03.007.08.

System Sizing

The minimum area in square feet of bottom surface required for use of the ATL System is specified in Table 2 on page 10 of this Manual. The areas presented in this table are calculated utilizing the daily design flows in IDAPA 58.01.03 and the loading rates specified in Table 4-20. Secondary biological treatment system hydraulic application rates, in ~~section 4.21.5 of~~ the current edition of the TGM~~, which are used with systems which produce secondary biological treatment effluent~~.

Soil Design Subgroup	Application Rate (gallons/square foot/day)
A-1	1.7
A-2a	1.2
A-2b	1.0
B-1	0.8
B-2	0.6
C-1	0.4
C-2	0.3

Table 1: Secondary biological treatment system hydraulic application rates

Trench Systems

Minimum trench width is 3 feet. Maximum trench width is 6 feet. Minimum center-to-center spacing of the ATL conduit rows in trench configuration is 2.0 feet. Maximum center-to-center spacing of the ATL conduit rows in trench configuration is 3.0 feet.

The total area of the trench configuration cannot exceed 1,500 square feet~~.~~ – in standard (gravity) drainfields (~~IDADAP~~ IDAPA 58.01.03.008.04). Drainfields exceeding 1,500 square feet in total trench bottom area must be pressure dosed (Section 4.19 Pressure Distribution of the TGM).

Bed Systems

Formatted: Centered
Formatted Table
Formatted: Font: Bold
Formatted: Centered
Formatted: Centered
Formatted: Centered
Formatted: Centered
Formatted: Centered
Formatted: Centered
Formatted: Centered
Formatted: Centered
Formatted: Font: Bold

Comment [JP1]: In other words: Drainfields larger than 1,500 ft2 trench area bottom are prohibited from being constructed as a standard (gravity) drainfield (IDAPA 58.01.03.008.04). Drainfields exceeding 1,500 ft2 in total trench bottom area must be pressure-dosed (section 4.19).

SYSTEM CONFIGURATIONS

Beds systems are only allowed when trench systems cannot be designed within the constraints of the site. Beds may not be utilized on any site which include slopes greater than 8%. All absorption beds must be approved to be used by the permitting Idaho Public Health District prior to design or installation.

Minimum center-to-center spacing of the ATL conduit rows is 2.0 feet. Maximum center-to-center spacing of ATL conduit rows within the bed is 3 feet.

Sand Extensions

"Sand extension" is the term used to describe the system sand placed on the outside aspect of the outermost ATL conduit row(s), and on each end of the ATL conduit row(s). Sand extensions along the side aspect of the outermost ATL conduit row(s) must be a minimum of 12-inches wide and a maximum of 3 feet wide. Sand extensions on each end of the ATL conduit row(s) shall be 12 inches long.

Effluent Distribution

The ATL System can accommodate all methods of effluent distribution, including gravity, pump-to-gravity, serial, and pressure distribution.

Pressure Distribution

If pressure distribution is used with the ATL System, all aspect of the pressure distribution system shall be designed and installed in accordance with Section 4.19 Pressure Distribution System of ~~the current edition of~~ the TGM, with the exception of orifice orientation. ~~Lateral piping within the pressure distribution shall be placed within the 4-inch diameter distribution pipe in the ATL conduit row.~~ The orifices in the distribution lateral shall be oriented towards the top of the pipe.~~The direction to which the small diameter orifices within the lateral pipes are directed is not critical~~. See page 22 for detailed pressure distribution installation instructions.

Serial Distribution

The use of raised connections is recommended in serial distribution designs. The raised connection should be designed to increase the invert of the ATL conduit row up to, but no higher than, the top of the ATL conduit. See page 21 for more information.

Dosed Systems

If effluent is pumped to the ATL System, the maximum volume per cycle ~~shall be~~shall not exceed 20% ~~1/4~~ of the estimated daily design flow. If the total dose volume is too small, then the pipe network will not become fully pressurized or may not be pressurized for a significant portion of the total dosing cycle and may need to be adjusted

Distribution Boxes

A distribution box ~~shall~~ is recommended to be used to separate flows equally between multiple trenches or separate beds. The distribution box shall meet all requirements of Section 3.2.5.2 Distribution Box ~~of the current edition~~of the TGM. The inlet port from the septic tank to the distribution box shall be higher than the outlet ports to allow for proper drainage to the ATL conduit rows.

Fill and Cover Materials

All cover and fill materials must conform to the requirements of the current edition of the TGM.

Formatted: Font: Not Bold, Underline

Formatted: Font: Not Bold

Formatted: Indent: Left: 0.5"

Formatted: Font: Not Bold

SYSTEM CONFIGURATIONS

DEQ requires covering the drainfield with topsoil with a minimum of 12 inches and maximum of 36 inches (IDAPA 58.01.03.008.04 and TGM 3.2.7.2 Soil Cover). A geotextile barrier shall be placed between the uppermost sand layer and ATL conduit row and topsoil prior to backfilling.

Minimum Separation Distances

Horizontal separation distances (setbacks) shall meet the requirements of the TGM, and shall be measured from the outside aspect of the system sand.

Vertical separation distances shall meet the specifications detailed in Table 4 ~~18~~ 19. Recirculating gravel filter vertical separation to limiting layers (feet), ~~of the current edition of the TGM,~~ and Table 1 below. Vertical separation distances shall be measured from the bottom of the 12-inch layer of system sand below the conduit rows. The bottom of the installed system sand shall be a minimum of 12 inches from the seasonal and normal high water table.

Limiting Layer	Flow < 2,500 GPD All Soil Types	Flow > 2,500 GPD All Soil Types
Impermeable layer	2	4
Fractured rock or very porous layer	1	2
Normal high ground water	1	2
Seasonal high ground water	1	2

Table 2: ATL System vertical separation to limiting layers (feet)

Formatted: Font: Bold

Formatted: Font: Bold

Minimum Conduit Lengths

The minimum design length of ATL conduit in residential applications is ~~100~~ 70 linear feet~~, based upon the minimum sizing requirement of 200 GPD for residential and commercial systems~~., or 1 bedroom. Each additional bedroom requires an additional ~~50~~ 70 linear feet of ATL conduit. For commercial applications, ATL conduit length shall be calculated at 2.14 GPD/lf. All wastewater discharging to a subsurface system must be pre-treated to domestic strength effluent prior to discharge to the field.

Comment [BD2]: Infiltrator has decided to recommend 70 linear feet per bedroom. With this change, we will now allow 1 bedroom designs at a minimum of 70 linear feet of ATL conduit.

Number of Bedrooms	Minimum ATL conduit Length (ft)
1	70
2	~~100~~140
3	~~150~~210
4	~~200~~280
5	~~250~~350
Each Additional	~~50~~70

Table 3: Minimum ATL conduit lengths

Comment [BD3]: With the change from 50 lf/BR to 70 lf/BR, we will now allow a 1-bedroom design.

Table 3 expanded to reflect this change.

Note: Individual ATL conduits shall not be cut or modified.

Comment [JC4]: Can you add a table note that a 1 bedroom shall still use 100 ft as the minimum? Or expand the table for 1 bedroom? Occasionally we get a RV trailer or small cabin in the woods that is just one bedroom. This situation has come up using a similar (but different ;)) synthetic drainfield product.

Formatted: Normal, No bullets or numbering

Formatted: Font: Bold, Italic

Formatted: List Paragraph

Minimum System Size

Each ATL System in a residential application shall be comprised of trench or bed bottom area and linear feet of ATL conduit to meet the design requirements for a 3-bedroom home in the system design soil group.

3-Foot Wide Trench

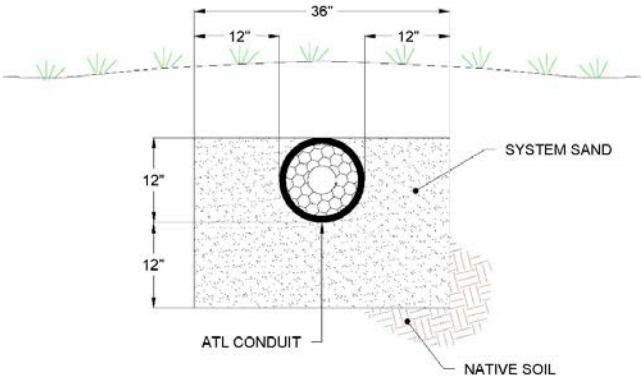

5-Foot-Wide Trench

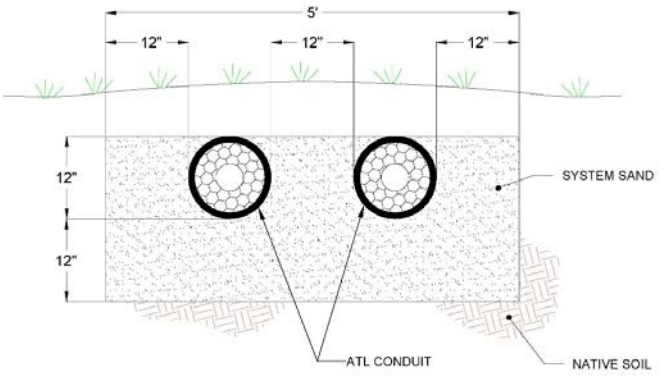

6-Foot-Wide Trench

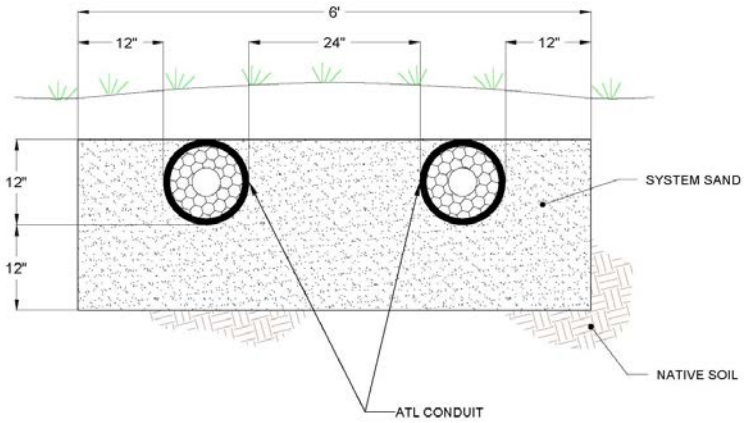

Trench Configuration – Plan View

Comment [JC5]: Ensure diagram resolution is clear and easy to read.

Comment [BD6]: Plan views upgraded as requested for improved resolution.

SYSTEM CONFIGURATIONS

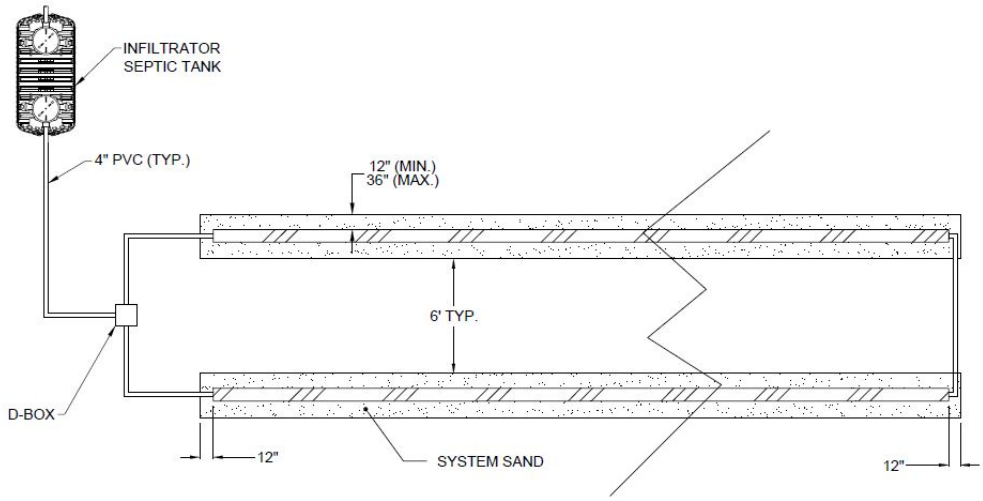

Bed Configuration

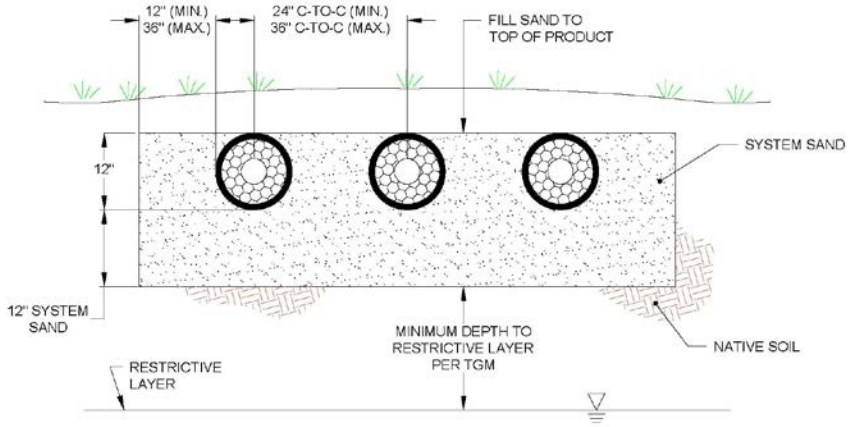

Bed Configuration – Plan View

SYSTEM CONFIGURATIONS

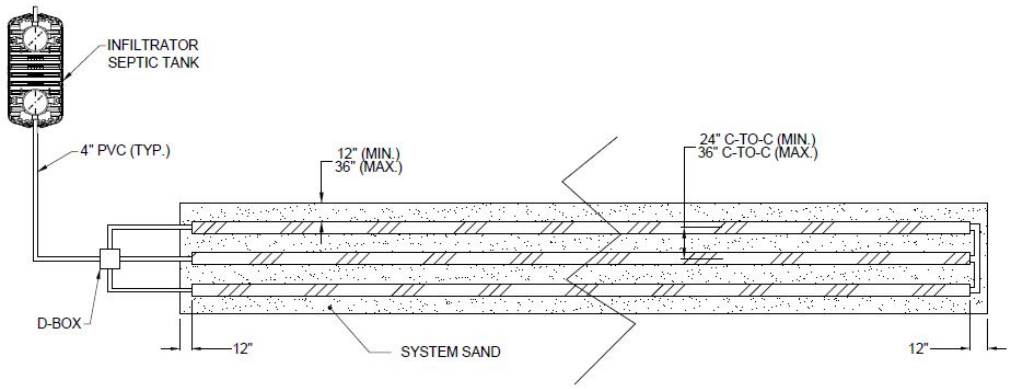

NOTES:

1. Drawings are not to scale.
2. Number and length of conduits per design.
3. Venting is not required but is optional at the discretion of the designer.
4. Pumping is not required unless gravity flow cannot be achieved.
5. Observation ports are optional, per design.
6. The ATL System is intended for use in non-traffic applications.

Above-Grade Capping Fill System

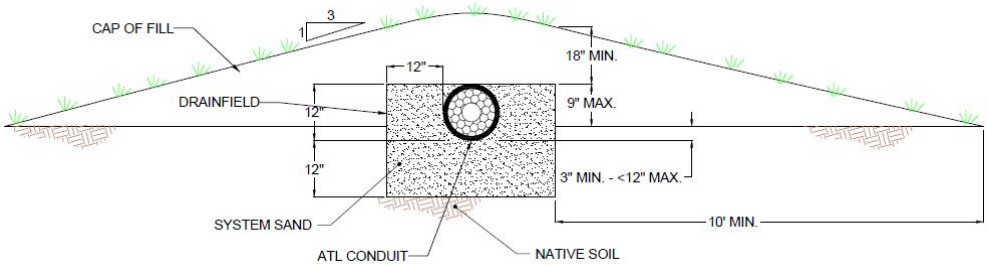

NOTES:

1. **Bottom of the ATL conduit must be at least three inches below the native soil grade.**
2. **Minimum separation distances must be maintained between excavation bottom and limiting layer.**
3. **All aspects of Section 4.3.3 Above-Grade Capping Fill System in the TGM are applicable to design and installation.**

Formatted: List Paragraph, Numbered + Level: 1 + Numbering Style: 1, 2, 3, … + Start at: 1 + Alignment: Left + Aligned at: 0.25" + Indent at: 0.5"

Formatted: Font: 9 pt, Bold

DESIGN EXAMPLE

TRENCH SYSTEM

Designing the ATL System in Idaho in trench configuration is a five-step process.

1. *Determine the minimum total ATL conduit length required*
2. *Determine the minimum area in square feet of bottom surface required*
3. *Select a trench width*
    a. *minimum 3 feet; maximum 6 feet*
4. *Calculate the total trench length required*
5. *Modify design trench length and/or width as necessary*

Step 1: Determine the minimum total ATL conduit length required

Use Table 2 to determine the minimum length of ATL conduit per bedroom required:

Number of Bedrooms	Minimum Total ATL Conduit Length (ft)
1	70
2	~~100~~140
3	~~150~~210
4	~~200~~280
5	~~250~~350
Each Additional	~~50~~70

Table 2: Minimum total ATL conduit length

Comment [BD7]: 1 BR design now allowed, at 70 lf/BR.

Step 2: Determine the minimum area in square feet of bottom surface required (ft^2)

Based upon the soil type determined in the site investigation, reference Table3 below to determine the minimum area in square feet of bottom surface required.

	Minimum Area of Bottom Surface Required (sq ft)						
	Application Rate (GPD/sq ft) / Soil Design Subgroup						
Bedrooms	**1.7 / A-1**	**1.2 / A-2a**	**1.0 / A-2b**	**0.8 / B-1**	**0.6 / B-2**	**0.4 / C-1**	**0.3 / C-2**
1	89	125	150	188	250	375	500
2	118	167	200	250	~~333~~334	500	667
3	148	209	250	313	417	625	834
4	177	250	300	375	500	750	1000
5	206	292	350	438	584	875	1167
Each Additional	30	42	50	63	84	125	167

Table 3: Minimum area of bottom surface required (ft^2)

Comment [BD8]: 1 and 2 BR specs added to Table 3 throughout.

Step 3: Select a trench width

Individual trenches shall be a minimum of 3-feet wide and a maximum of 6-feet wide. The system should be designed as long and narrow as site conditions allow.

Divide the minimum area in square feet of bottom surface required by the minimum length of ATL conduit per bedroom required to get guidance on an appropriate trench width for the ATL System.

Step 4: Calculate the total trench length required

Divide the minimum area in square feet of bottom surface required as determined in Step 2 by the trench width selected in Step 3 to calculate the total trench length required.

Step 5: Modify design trench length and width as necessary

The design trench width or length may be modified in order to maximize the relationship between the total ATL conduit length required and the minimum area in square feet of bottom surface required, while meeting the following trench design requirements:

NOTES:

1. *Minimum trench length is 30 ft; maximum trench length is 100 ft.*
    a. *If the total trench length required is less than 30 ft, either:*
        i. *increase the length of the trench to 30 ft; or*
        ii. *decrease the selected width of the trench (Step 3) to increase the length to beyond 30 ft.*
    b. *If the total trench length required is greater than 100 ft; either:*
        i. *divide the trench into multiple trenches; or*
        ii. *increase the selected width of the trench (Step 3) to decrease the length to less than 100 ft.*
2. *ATL conduits come in 10-foot lengths; all ATL conduit-length calculations shall be rounded up to the nearest 10-foot increment.*
3. *ATL conduit rows must extend to 12 inches of each end of the trench.*
    a. *Final trench lengths will include the 12-inch-wide sand extension on each end of the trench.*
4. *The system should be designed as long and narrow as site conditions allow.*

DESIGN EXAMPLE

The following sample system design calculations are intended to illustrate the methodology for designing the ATL System. The sample system design calculations are provided in the step-by-step format described above.

Example I.

Comment [BD9]: Examples revised to reflect new 70 lf/BR minimum conduit lengths.

System sample specifications:

- 4-bedroom home
- Soil: B-2; 0.6 gal/ft^2/day hydraulic application rate

Step 1: Determine the minimum total ATL conduit length required

Referencing Table 2, the minimum total length of ATL conduit required is ~~200~~ 280 ft.

Number of Bedrooms	Minimum Total ATL Conduit Length (ft)
1	70
2	~~100~~140
3	~~150~~210
4	~~200~~280
5	~~250~~350
Each Additional	~~50~~70

Table 2: Minimum total ATL conduit length

Step 2: Determine the minimum area in square feet of bottom surface required (ft^2)

Referencing Table 3, the minimum area in square feet of bottom surface required is 500 sf.

	Minimum Area of Bottom Surface Required (sq ft)						
	Application Rate (GPD/sq ft) / Soil Design Subgroup						
Bedrooms	**1.7 / A-1**	**1.2 / A-2a**	**1.0 / A-2b**	**0.8 / B-1**	**0.6 / B-2**	**0.4 / C-1**	**0.3 / C-2**
1	89	125	150	188	250	375	500
2	118	167	200	250	~~333~~334	500	667
3	148	209	250	313	417	625	834
4	~~177~~	~~250~~	~~300~~	~~375~~	500	750	1000
5	206	292	350	438	584	875	1167
Each Additional	30	42	50	63	84	125	167

Table 3: Minimum area of bottom surface required (ft^2)

Step 3: Select a trench width

500 sf (minimum area in square feet of bottom surface required – Step 2) divided by 280 ft (minimum length of ATL conduit per bedroom required – Step 1) = 1.8 ft.

Select 3 ft.

Step 4: Calculate the total trench length required

500 sf (minimum area in square feet of bottom surface required - Step 2) divided by 3 ft (trench width selected - Step 3) = 166.7 ft (total trench length required).

Step 5: Modify design trench length and width as necessary

Utilizing a 3-ft-wide trench, 166.7 linear feet (lf) of trench will require use of 170 lf of ATL conduit (*ATL conduits are 10-feet long and may not be cut*).

Formatted: Font: Italic

Check that minimum total length of ATL conduit requirement is being met:

A 4-bedroom house requires a minimum of 280 linear feet of ATL conduit. As a result, the minimum trench length of 170 linear feet must be adjusted to 280 linear feet.

Proposed design: Four 3-foot-wide trenches, each 72 feet in length (70 feet of ATL conduit and 2 feet of sand extension - 1 foot on each end). 4 rows times 70 lf/row = 280 lf of ATL conduit.

Check that minimum area in square feet of bottom surface requirement as designed is being met:

72 lf of trench X 3-ft-wide trench = ~~210~~ 216 sf/trench X 4 trenches = ~~840~~ 864 sf.
500 sf required. Minimum area in square feet of bottom surface requirement is met.

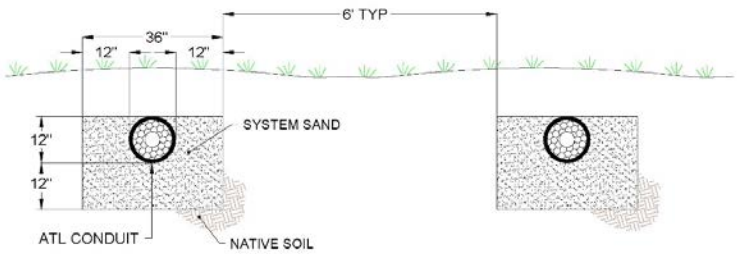

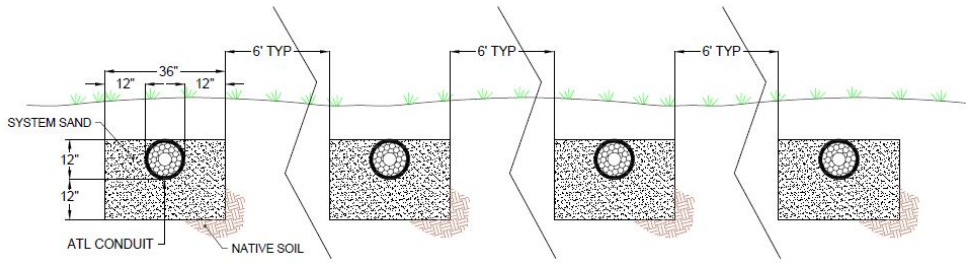

Formatted: Centered

Example II.

System sample specifications:

- 3-bedroom home
- Soil: C-1; 0.4 gal/ft^2/day hydraulic application rate

DESIGN EXAMPLE

Step 1: Determine the minimum total ATL conduit length required

Referencing Table 2, the minimum total length of ATL conduit required is ~~150~~ 210 ft.

Number of Bedrooms	Minimum Total ATL Conduit Length (ft)
1	70
2	140
3	210
4	280
5	350
Each Additional	70

Table 2: Minimum total ATL conduit length

Step 2: Determine the minimum area in square feet of bottom surface required (ft^2)

Referencing Table 3, the minimum area in square feet of bottom surface required is 625 sf.

	Minimum Area of Bottom Surface Required (sq ft)						
	Application Rate (GPD/sq ft) / Soil Design Subgroup						
Bedrooms	**1.7 / A-1**	**1.2 / A-2a**	**1.0 / A-2b**	**0.8 / B-1**	**0.6 / B-2**	**0.4 / C-1**	**0.3 / C-2**
1	89	125	150	188	250	375	500
2	118	167	200	250	~~333~~334	500	667
3	~~148~~	~~209~~	~~250~~	~~313~~	~~417~~	625	834
4	177	250	300	375	500	750	1000
5	206	292	350	438	584	875	1167
Each Additional	30	42	50	63	84	125	167

Table 3: Minimum area of bottom surface required (ft^2)

Step 3: Select a trench width

625 sf (minimum area in square feet of bottom surface required – Step 2) divided by 210 ft (minimum length of ATL conduit per bedroom required – Step 1) = 2.97 ft.

Select 3 ft.

Step 4: Calculate the total trench length required

625 sf (minimum area in square feet of bottom surface required - Step 2) divided by 3 ft (trench width selected - Step 3) = 208.3 ft (total trench length required).

Step 5: Modify design trench length and width as necessary

Utilizing a 3-ft-wide trench, 208.3 linear feet (lf) of trench will require use of 210 lf of ATL conduit (ATL conduits are 10-feet long and may not be cut).

Check that minimum total length of ATL conduit requirement is being met:

> A 3-bedroom house requires a minimum of 210 linear feet of ATL conduit. The minimum trench length of 210 linear feet meets the 210 linear feet of ATL conduit requirement.

DESIGN EXAMPLE

Proposed design: Three 3-foot-wide trenches, each 72 feet in length (70 feet of ATL conduit and 2 feet of sand extension - 1 foot on each end). 3 rows times 70 lf/row = 210 lf of ATL conduit.

Check that minimum area in square feet of bottom surface requirement as designed is being met:

72 lf of trench X 3-ft-wide trench = ~~210~~ 216 sf/trench X 3 trenches = 648~~630~~ sf.
625 sf required. Minimum area in square feet of bottom surface requirement is met.

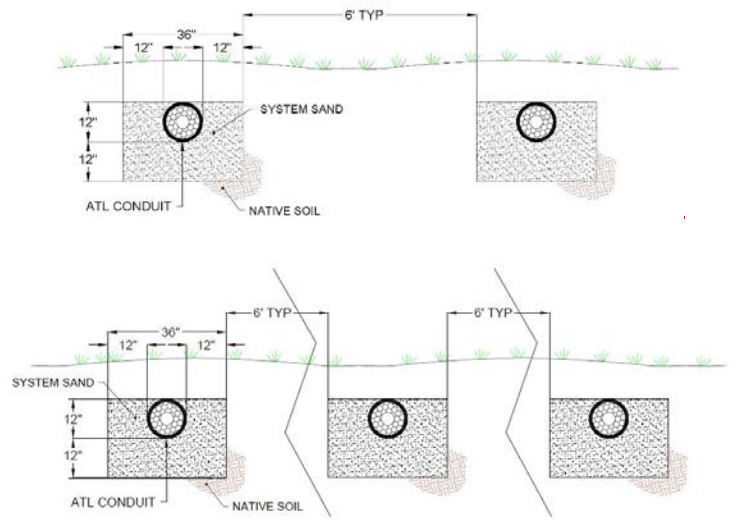

Formatted: Centered

BED SYSTEM

Designing the ATL System in Idaho in trench configuration is a five-step process.

1. *Determine the minimum total ATL conduit length required*
2. *Determine the minimum area in square feet of bottom surface required*
3. *Select an ATL conduit row length*
   a. ATL conduit rows within the bed must be of equal length.
4. *Calculate the required bed width*
5. *Modify design bed dimensions as necessary*

Step 1: Determine the minimum total ATL conduit length required
Use Table 2 to determine the minimum length of ATL conduit per bedroom required:

Number of Bedrooms	Minimum Total ATL Conduit Length (ft)
1	70
2	140
3	210
4	280
5	350
Each Additional	70

Table 2: Minimum total ATL conduit length

Step 2: Determine the minimum area in square feet of bottom surface required (ft^2)
Based upon the soil type determined in the site investigation, reference Table 3 below to determine the minimum area in square feet of bottom surface required.

	Minimum Area of Bottom Surface Required (sq ft)						
	Application Rate (GPD/sq ft) / Soil Design Subgroup						
Bedrooms	**1.7 / A-1**	**1.2 / A-2a**	**1.0 / A-2b**	**0.8 / B-1**	**0.6 / B-2**	**0.4 / C-1**	**0.3 / C-2**
1	89	125	150	188	250	375	500
2	118	167	200	250	~~333~~334	500	667
3	148	209	250	313	417	625	834
4	177	250	300	375	500	750	1000
5	206	292	350	438	584	875	1167
Each Additional	30	42	50	63	84	125	167

Table 3: Minimum area of bottom surface required (ft^2)

Step 3: Select an ATL conduit row length
Select an appropriate length of the ATL conduit rows based upon the minimum length of ATL conduit required and site considerations. Long and narrow systems are recommended.

Divide the minimum area in square feet of bottom surface required by the ATL conduit row length selected to determine the number of ATL conduit rows. Each ATL conduit row within the bed must be of equal length.

Step 4: Calculate the required bed width
Divide the minimum area in square feet of bottom surface required as determined in Step 2 by the ATL conduit row length selected in Step 3 to calculate the approximate required bed width.

Step 5: Modify design bed dimensions as necessary
The bottom surface area of the proposed bed design (system sand footprint) must meet or exceed the minimum bottom surface area required as determined in Step 2 (Table 3). If the proposed bed design does not result in a system sand footprint area greater than the minimum bottom surface area required, adjustments must be made to the bed design.

In all ATL System bed designs, the following requirements must be met:

NOTES:

1. *Minimum ATL conduit row length is 30 ft; maximum ATL conduit row length is 100 ft.*
    a. *If the total ATL design bed length is greater than 100 ft, either:*
        i. *the number of ATL conduit rows must be increased in order to reduce the length of each individual row to less than 100 feet; or*
        ii. *the bed must be divided the into multiple beds.*
2. *Individual ATL conduit rows must be separated by a minimum of 12-inches of system sand, with a maximum center-to-center spacing of 3 feet.*
3. *ATL conduits come in 10-foot lengths; all ATL row lengths in a given bed shall be in 10-foot increments.*

4. *ATL conduit rows must extend to 12 inches of each end of the trench.*
    a. *Final bed length will include the 12-inch-wide sand extension on each end of the ATL conduit rows.*
5. *The outermost ATL conduit rows must be no greater than 36 inches from the edge of the bed.*
6. *The system should be designed as long and narrow as site conditions allow.*

The following sample system design calculations are intended to illustrate the methodology for designing the ATL System in a bed configuration. The sample system design calculations are provided in the step-by-step format described above.

Example I.

System sample specifications:

- 4-bedroom home
- Soil: C-1; 0.4 gal/ft^2/day hydraulic application rate

Step 1: Determine the minimum total ATL conduit length required
Referencing Table 2, the minimum total length of ATL conduit required is 280 ft.

Number of Bedrooms	Minimum Total ATL Conduit Length (ft)
1	70
2	140
3	210
4	280
5	350
Each Additional	70

Table 2: Minimum total ATL conduit length

Step 2: Determine the minimum area in square feet of bottom surface required (ft^2)
Referencing Table 3, the minimum area in square feet of bottom surface required is 750 sf.

	Minimum Area of Bottom Surface Required (sq ft)						
	Application Rate (GPD/sq ft) / Soil Design Subgroup						
Bedrooms	**1.7 / A-1**	**1.2 / A-2a**	**1.0 / A-2b**	**0.8 / B-1**	**0.6 / B-2**	**0.4 / C-1**	**0.3 / C-2**
1	89	125	150	188	250	375	500
2	118	167	200	250	~~333~~334	500	667
3	148	209	250	313	417	625	834
4	~~177~~	~~250~~	~~300~~	~~375~~	~~500~~	750	1000
5	206	292	350	438	584	875	1167
Each Additional	30	42	50	63	84	125	167

Table 3: Minimum area of bottom surface required (ft^2)

Step 3: Select an ATL conduit row length
280 ft (minimum length of ATL conduit per bedroom required – Step 1) ÷ 4 = 70ft.

DESIGN EXAMPLE

Initial design shall include 4 rows of ATL conduit at 70 linear feet each. Add minimum sand extension on each end of 12 inches to create 72-foot-long bed length.

With 12 inches of systems sand between each row, and a 12-inch-wide sand extension on each side of the bed design, the bed width is 9 feet. The system sand footprint is 72' X 9' = 648 sf.

Step 4: Calculate the Calculate the required bed width
750 sf (minimum area in square feet of bottom surface required - Step 2) ÷ 72 ft (length of ATL conduit rows selected - Step 3) = 10.4 ft (width of bed required).

Step 5: Modify design trench length and width as necessary
The minimum bottom surface area required (Step 2, Table 3) is 750 sf. The proposed bed design offers 648 sf of bottom surface area. Adjustments must be made to increase the design bottom surface area to meet or exceed the required bottom surface area.

Adjustment calculations:

• Divide the required absorption bed area by the length of the system sand footprint (proposed bed design).	750 sf ÷ 72 ft = 10.42 ft
• Subtract the system sand footprint width from the required width as calculated above to determine the total sand extension required. ***NOTE:*** *Round up to feet/inches for ease of installation.*	10.42 ft – 9 ft = 1.42 ft
• The design system width must be widened by 1.42 ft, by adding a 9-inch-wide sand extensions on each side, resulting in a total bottom surface area of 756 sf:	72 ft x 10.5 ft = 756 sf

Formatted Table

Formatted: Font: Bold

DESIGN EXAMPLE

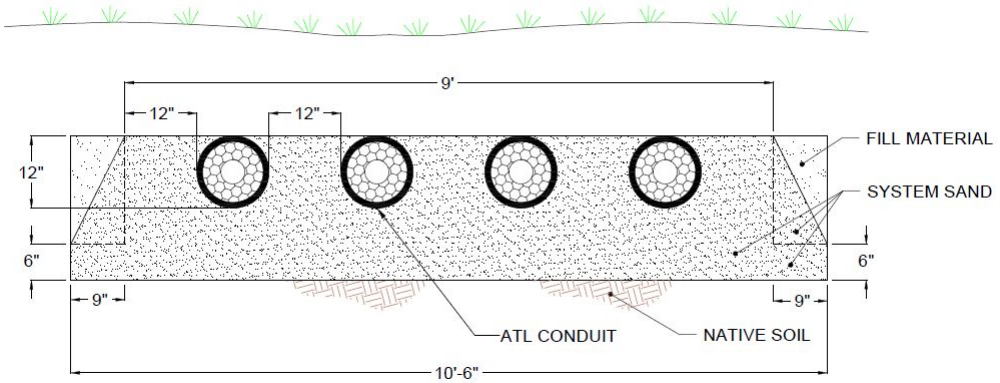

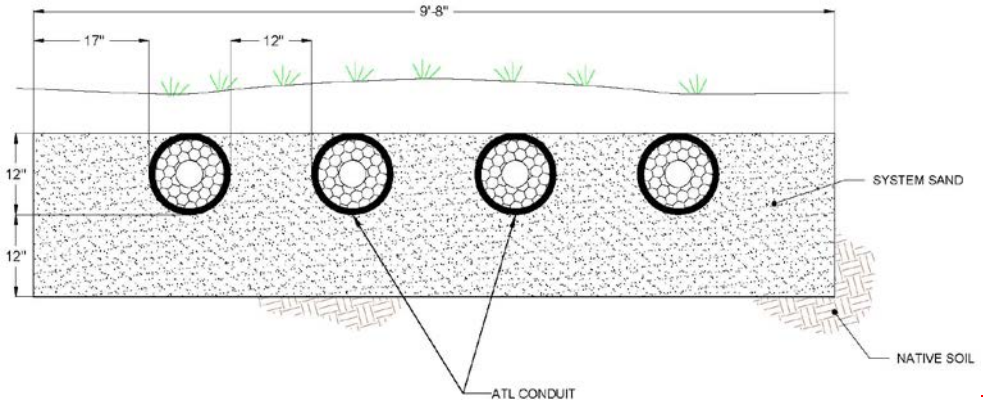

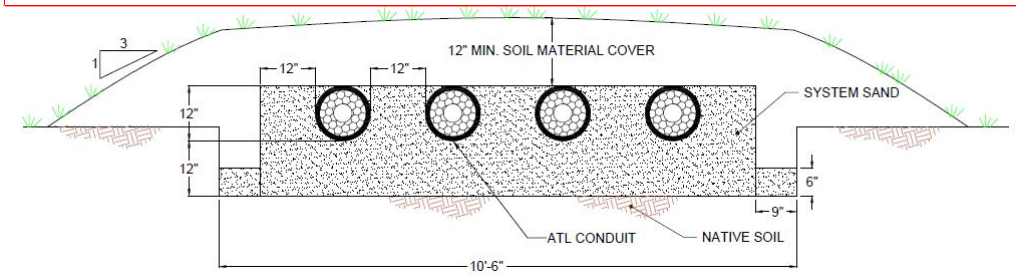

Comment [BD10]: This drawing will be deleted, and replaced by the "top" drawing.

INFORMATION FOR SYSTEM OWNERS

Basic rules of onsite sewage treatment system use and care apply to the ATL System. System owners shall operate the system in accordance with the procedures and specifications described in the TGM, all local regulations, and the following:

System Use and Abuse
Your ATL System is intended for use with residential-strength wastewater within the design daily flow volume. To ensure long-term function of your system:

- Keep daily wastewater flow within design parameters.
- Do not connect the rainwater management system to the ATL System.
- Direct water from the rainwater management system away from the ATL System.
- Solvents, paint, pharmaceuticals, aggressive cleaning products, and non-biodegradable items should not enter the ATL System.
- Solids, such as but not limited to, cigarette butts, diapers, feminine hygiene products, cat litter, and paper towels should not be introduced into the ATL system.

- Introduce only normal residential wastewater into the system
- Maintain leak-free household plumbing fixtures, such as faucets and toilets.
- Do not utilize a garbage grinder.
- The ATL System is intended for use in non-traffic applications.

Operation and Maintenance
Your ATL System has no specific operating instructions. Proper use of the system as noted above is the primary operating concern.

Maintenance of the ATL System includes the following:

- If the septic tank has an effluent filter, it should be cleaned by a qualified professional on an annual basis.
- The septic tank should be pumped on a regular basis and, if concrete, checked for leaks and cracks. The interval for septic tank pumping varies depending upon use. Check with a qualified professional or your local health department for the appropriate pumping interval.
- If present, the alarm system should be tested annually by a qualified professional to ensure that it is functional.

If at any time you have concerns about the use, operation, or maintenance of your ATL System, contact the Infiltrator's Technical Services Department at 1-800-221-4436.

System Start-up
There are no specific requirements for placing the ATL System into service. If the system has an alarm, a qualified professional should, after system use has been initiated, test the alarm to ensure it is functional.

Intermittent Use
The ATL System is designed for intermittent use, and requires no special attention if it is to be placed out of use for extended periods of time.

Trouble Shooting

In the event that any of the following indicators arise, contact a qualified professional.

- Wastewater back-up into the dwelling
- Persistent septic odor
- Unusually wet area atop and/or around the system
- "Breakout" of effluent along the side of a slope or other landscape feature

Repair

A qualified professional shall be contacted when there are indications of malfunction with the ATL System. When visiting the site, the qualified professional should, at a minimum, do the following:

- Assess the present condition of the ATL System and the surrounding area
- Research the history of use, including:
    - water volume use
    - contaminants
- Evaluate the site for groundwater intrusion
- Inspect the septic tank
- Inspect the conduit rows
- Check faucet and toilet function

Upon completion of the site visit, the qualified onsite wastewater system professional should contact the Infiltrator's Technical Services Department with the inspection report.

These installation instructions are for the ATL System in Idaho. ATL Systems may only be installed according to this manual, IDAPA 58.01.03, and any other local regulations.

If unsure of the installation requirements for a site, contact the qualified professional responsible for the design. If unsure of the use of the ATL System, contact Infiltrator. A permit which includes the soil evaluation and the design of the onsite system must be filed with and accepted by the local health department before installation.

Before You Begin

Materials and Equipment Needed

- conduits
- System sand
- PVC pipe and couplings
- Backhoe
- Laser or transit
- Shovel and rake
- Observation port and cap per design
- Endcaps
- 4-in internal corrugated pipe couplers
- Tape measure

Common practices shall apply to the installation of the ATL System. These include, but are not limited to:

- avoid soil compaction on the infiltrative surface area, including all areas downslope of a sloped system; and
- install the conduits and system sand on the same day that the system footprint is excavated/exposed.

The use of tracked vehicles for material installation is preferred.

Excavating and Preparing the Site

NOTE: *The ATL System may not be installed during periods when the soil is sufficiently wet to exceed its plastic limit, as this causes machinery to smear the soil.*

1. Stake out the locations of tank(s), pipes, conduit rows, and corners of the system to be scarified/excavated, per design. Set the elevations as shown on the approved plan. *[**NOTE:** The proper elevation of solid PVC header line going to each conduit row should be determined to ensure compliance with the required system bottom depth as shown* on *the approved permit. This height may vary dependent on system height and configuration used.]*
2. Install sedimentation and erosion control measures. *[**NOTE:** The installation of temporary drainage swales/berms (surface diversions) may be necessary to protect the site during rainfall events.]*
3. Excavate the trench or bed area per design.
4. Rake the trench or bed bottom and sides if smearing has occurred during excavation. Remove large stones and cut off protruding roots, fill voids with compacted system sand. *[**NOTE:** Smearing does not occur in sandy soils, so raking is not necessary. In fine textured soils (silts and clays), avoid walking on the excavation bottom to prevent compaction and loss of soil structure.]*
5. Verify that the trench or bed area is at the proper slope from side-to-side and from end-to-end using a transit or laser.

Installing the System

1. Install the system sand over the entire ATL System trench or bed area as per design. System sand should be leveled and stabilized prior to introduction of the conduits. The installer should retain records verifying that system sand meets the specifications for medium sand in Section 3.2.8.1.2 of the TGM.
2. Remove plastic stretch wrap from conduits.
3. Place conduits on the surface of the system sand with the white stripe/seam in the 12 o'clock position, arranged in the configuration shown on the system design. Using the provided 4-in-diameter internal pipe couplings, connect the conduits end-to-end to create rows of the required length.
4. Conduits shall be installed level. A laser level or transit is recommended to ensure proper alignment.
5. Conduit rows shall be:
   - installed on a level plane with one another;

- be installed parallel to any contours;
- be separated by a minimum of 12 in of system sand; and
- be installed with the white stripe/seam oriented in the 12 o'clock position.

NOTE: *Individual ATL conduits shall not be cut or modified.*

6. In serial distribution applications, use of a raised connection is recommended. One example of a raised connection is shown below:

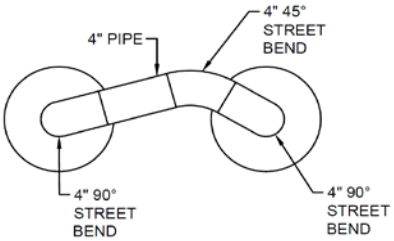

7. Install a cap on the end of each conduit row that is not connected with piping.
8. Once the conduit is placed on the surface of the system sand and distribution piping is connected to the conduits per design, additional system sand shall be ladled beside and between, and to the top, of each of the conduit rows. System sand shall also be installed on each side and at each end of the backfilled conduit rows, per the design. This additional system sand shall be stabilized. Where possible, all machine work should be done from the uphill side of the infiltration area to reduce possible compaction of the receiving soil area.

Installing Vents

NOTE: *If design of the ATL System includes venting, the following instructions are provided.*

For gravity systems:

1. A low vent is installed through an offset adapter at the end of each section, bed, or attached to a vent manifold, with a minimum 3-ft pipe extending above final grade.
2. The internal house plumbing and roof vent act as the high vent for the system.

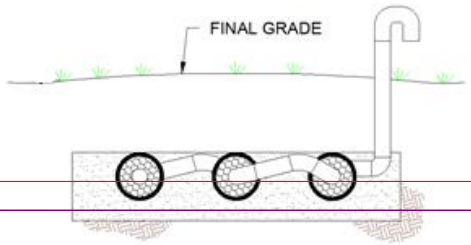

For pressurized and pump-to-gravity systems:

1. A low vent is installed through an offset adapter at the end of each section, bed, or attached to a vent manifold, with a minimum 3-ft pipe extending above final grade.
2. A high vent must maintain a minimum 10-ft vertical separation from the low vent, and may be installed in one of the following locations:
   - directly at the d-box; or
   - located remotely (along a nearby tree line, or other less conspicuous spot).

NOTE: *In pump-to-gravity applications, the internal house plumbing and roof vent may act as the system's high vent. To accomplish this, a minimum 3-inch diameter pipe must be installed between the d-box and septic tank to bypass the small diameter pressure distribution main.*

Installing Observation/Monitoring Ports

If observation or monitoring ports are specified in the system design:

1. Cut a 6-inch PVC pipe to the desired length, ensuring the pipe will extend a minimum of 6 inches above final grade.
2. Drill a minimum of ten ¼" to ½" holes within ½ to 6 inches of the bottom of the pipe, and wrap the bottom end of the pipe in filter fabric.
3. Install the monitoring pipe at the appropriate location, based on site conditions, and

Comment [BD11]: See new text under section titled "Effluent Distribution" on Page 4.

Comment [JC12]: Add section in general description of a raised connection. DEQ/HD rely on the manufacture's recommendation and details for verifying correct installation in the field.

ensure the bottom of the pipe is at the bottom of the system sand footprint (at the system sand/native soil interface).

4. Install a removable, water-tight, secure cover cap.

Installing Pressure Distribution

If pressure distribution is preferred, the pressure distribution system shall be designed and installed in accordance with Section 4.19 Pressure Distribution System of the TGM, with the exception of orifice orientation. The orifices in the distribution lateral shall be oriented towards the top of the pipe.

The distribution laterals should be placed within the 4–inch-diameter ATL conduit distribution pipe for the entire length of each ATL conduit row, as shown below.

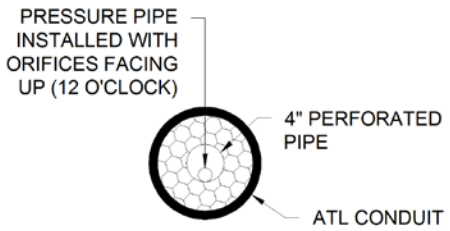

In accordance with Section 4.19.3.1 Piping, sweeping cleanouts should be placed at the terminal end of each lateral and be accessible from grade, and should be the same diameter piping as the main lateral.

- A ball valve or threaded cap should be located on the end of the cleanout that allows the lateral to be flushed.
- Prior to pressurization of the distribution laterals, the system should be flushed with clean water while all of the terminal ball valves are open or caps are removed.
- Cleanout access risers shall not extend past the installation depth of the drainfield and native soil or medium sand interface."

In order to ensure that the small-diameter laterals are placed at the bottom of the 4-inch distribution pipe within the ATL conduit row, drill an appropriately-sized hole in the 4" end cap at its bottom (see picture below):

Covering the System

NOTE: *Before backfilling, the system shall be inspected as required in the TGM and in compliance with all local ordinances and procedures.*

1. Material placed around the system sand and atop the conduits may be additional system sand or material which meets the requirements of the TGM.
2. Backfill the trench(es) or bed by pushing material over the ATL System. Cover material shall be a minimum of 12 inches and a maximum of 36 inches deep. It is best to mound several extra inches of soil over the finish grade to allow for settling. This also ensures that runoff is diverted away from the system.
   *[**NOTE:** Do not drive over the system while backfilling in sand.]*
3. After the system is covered, the site should be seeded or sodded. Ensure that sand-based sod, and not clay-based sod, is used to mitigate the potential for erosion.

NOTE: *If the system is for new home construction, it is important to leave marking stakes along the boundary of the system.*

Formatted: Font: 11 pt
Formatted: Font: 11 pt, Not Bold
Formatted: Font: 11 pt
Formatted: Font: 11 pt, Not Bold
Formatted: Font: 11 pt
Formatted: Font: 11 pt, Not Bold
Formatted: Centered
Comment [BD13]: Comments relative to cleanouts added as requested.
Formatted: Font: 11 pt, Not Bold
Formatted: Font: +Body (Calibri), 11 pt
Formatted: Bulleted + Level: 1 + Aligned at: 0.25" + Indent at: 0.5"
Formatted: Font: 11 pt
Formatted: Font: 11 pt, Not Bold

INFILTRATOR WATER TECHNOLOGIES, LLC ("Infiltrator")
ATL SYSTEM STANDARD LIMITED WARRANTY

(a) The structural integrity of the Infiltrator ATL System conduits manufactured by Infiltrator (collectively referred to as "Units"), when installed and operated in a leachfield of an onsite septic system in accordance with Infiltrator's installation instructions, is warranted to the original purchaser ("Holder") against defective materials and workmanship for one year from the date upon which Letter of Certification is issued for the septic system containing the Units provided, however, that if a septic permit is not required for the septic system by applicable law, the one (1) year warranty period will begin upon the date that installation of the septic system commences. In order to exercise its warranty rights, Holder must notify Infiltrator in writing at its corporate headquarters in Old Saybrook, Connecticut within fifteen (15) days of the alleged defect. Infiltrator will supply replacement Units for those Units determined by Infiltrator to be defective and covered by this Limited Warranty. Infiltrator's liability specifically excludes the cost of removal and/or installation of the Units.

(b) THE LIMITED WARRANTY AND REMEDIES IN SUBPARAGRAPH (a) ARE EXCLUSIVE. THERE ARE NO OTHER WARRANTIES WITH RESPECT TO THE UNITS, INCLUDING NO IMPLIED WARRANTIES OF MERCHANTABILITY OR FITNESS FOR A PARTICULAR PURPOSE.

(c) This Limited Warranty shall be void if any part of the ATL System components is manufactured by anyone other than Infiltrator. The Limited Warranty does not extend to incidental, consequential, special or indirect damages. Infiltrator shall not be liable for penalties or liquidated damages, including loss of production and profits, labor and materials, overhead costs, or other losses or expenses incurred by the Holder or any third party. Specifically excluded from Limited Warranty coverage are damage to the Units due to ordinary wear and tear, alteration, accident, misuse, abuse or neglect of the Units; the Units being subjected to vehicle traffic or other conditions which are not permitted by the installation instructions; failure to maintain the minimum ground covers set forth in the installation instructions; the placement of improper materials into the system containing the Units; failure of the Units or the septic system due to improper siting or improper sizing, excessive water usage, improper grease disposal, or improper operation; or any other event not caused by Infiltrator. This Limited Warranty shall be void if the Holder fails to comply with all of the terms set forth in this Limited Warranty.

Further, in no event shall Infiltrator be responsible for any loss or damage to the Holder, the Units, or any third party resulting from installation or shipment, or from any product liability claims of Holder or any third party. For this Limited Warranty to apply, the Units must be installed in accordance with all site conditions required by state and local codes; all other applicable laws; and Infiltrator's installation instructions.

(d) No representative of Infiltrator has the authority to change this Limited Warranty in any manner whatsoever, or to extend this Limited Warranty. No warranty applies to any party other than the original Holder.

* * * * * * *

The above represents the standard Limited Warranty offered by Infiltrator. A limited number of states and counties have different warranty requirements. Any purchaser of Units should contact Infiltrator's corporate headquarters in Old Saybrook, Connecticut, prior to such purchase, to obtain a copy of the applicable warranty, and should carefully read that warranty prior to the purchase of Units.

INFILTRATOR®
water technologies

P.O. Box 768 • Old Saybrook, CT 06475
800-221-4436

Design and Installation Manual for the Infiltrator ATL™ System in Idaho

Infiltrator ATL System in Idaho	
INTRODUCTION	2
STATE-SPECIFIC INFORMATION	3
SYSTEM CONFIGURATIONS	6
TRENCH SYSTEM DESIGN	10
TRENCH SYSTEM DESIGN EXAMPLES	12
BED SYSTEM DESIGN	15
BED SYSTEM DESIGN EXAMPLES	17
INFORMATION FOR SYSTEM OWNERS	19
INSTALLATION INSTRUCTIONS	21
WARRANTY	24

The purpose of this manual is to provide the minimum specifications for design and installation of the Infiltrator ATL (Advanced Treatment Leachfield) System in the State of Idaho. All local ordinances, requirements, and procedures must be followed. Each revised version of this manual supersedes the previous version.

The systems presented in this document are common configurations and are provided for illustrative purposes. They are not intended to restrict the use of other configurations.

For more detailed design and installation information, please contact Infiltrator at 1-800-221-4436.

IDAHO

The Infiltrator ATL System

The Infiltrator ATL System (ATL System) is a patent-pending, proprietary system consisting of six components. Upon entering the ATL System, septic tank effluent progresses through each component as follows:

- nominally 12-inch-diameter conduit
  - 4-inch-diameter pipe
  - large-diameter synthetic aggregate
  - coarse geotextile
  - small-diameter synthetic aggregate
  - fine geotextile
- 12-inch depth specified system sand

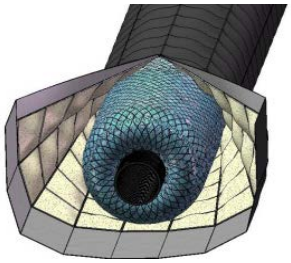

System Sand

"System sand" is the term used to describe the specified sand material that is placed between, beside and below and the ATL conduits. Acceptable system sand shall be material that conforms with the description of "medium sand" as specified in Section 3.2.8.1.2 of the Technical Guidance Manual.

The following minimum system sand dimensions are required for all ATL System configurations:

- 12 inches below the ATL conduit rows;
- 12 inches between adjacent ATL conduit rows;
- 12 inches beside (outside) any ATL conduit row with no adjacent ATL conduit row; and
- 12 inches extending beyond both ends of the ATL conduit rows.

There is no minimum requirement for system sand on top of the conduit rows

The ATL System is certified by NSF International as complying with NSF/ANSI Standard 40 for the production of Class I effluent. As a result of this certification, the ATL System is approved for use in the State of Idaho as a Proprietary Wastewater Treatment Product (PWTP) by the Water Quality Division of the Idaho Department of Environmental Quality (DEQ) in accordance with Section 1.4.2.4 of the Technical Guidance Manual (TGM). The DEQ approval allows for design and installation of the ATL System in the State of Idaho in accordance with the specifications and instructions in this manual. If design, installation, operation, or maintenance specifications are not specifically addressed in this manual, relevant requirements in the current edition of the TGM shall be applicable.

This Manual is intended to provide system design, installation, and use information to the users in Idaho, including system designers, local health officials, system installers, and system owners. Illustrations presented in this manual are common configurations and are not intended to restrict the use of other configurations.

Daily Design Flows
Daily design flows shall be in accordance with IDAPA 58.01.03.007.08.

System Sizing
The minimum area in square feet of bottom surface required for use of the ATL System is specified in Table 2 on page 10 of this Manual. The areas presented in this table are calculated utilizing the daily design flows in IDAPA 58.01.03 and the loading rates specified in Table 4-20. Secondary biological treatment system hydraulic application rates, in the current edition of the TGM.

Soil Design Subgroup	Application Rate (gallons/square foot/day)
A-1	1.7
A-2a	1.2
A-2b	1.0
B-1	0.8
B-2	0.6
C-1	0.4
C-2	0.3

Table 1: Secondary biological treatment system hydraulic application rates

Trench Systems
Minimum trench width is 3 feet. Maximum trench width is 6 feet. Minimum center-to-center spacing of the ATL conduit rows in trench configuration is 2.0 feet. Maximum center-to-center spacing of the ATL conduit rows in trench configuration is 3.0 feet.

The total area of the trench configuration cannot exceed 1,500 square feet– in standard (gravity) drainfields (IDAPA 58.01.03.008.04). Drainfields exceeding 1,500 square feet in total trench bottom area must be pressure dosed (Section 4.19 Pressure Distribution of the TGM).

Bed Systems
Beds systems are only allowed when trench systems cannot be designed within the constraints of the site. Beds may not be utilized on any site which include slopes greater

than 8%. All absorption beds must be approved to be used by the permitting Idaho Public Health District prior to design or installation.

Minimum center-to-center spacing of the ATL conduit rows is 2.0 feet. Maximum center-to-center spacing of ATL conduit rows within the bed is 3 feet.

Sand Extensions
"Sand extension" is the term used to describe the system sand placed on the outside aspect of the outermost ATL conduit row(s), and on each end of the ATL conduit row(s). Sand extensions along the side aspect of the outermost ATL conduit row(s) must be a minimum of 12-inches wide and a maximum of 3 feet wide. Sand extensions on each end of the ATL conduit row(s) shall be 12 inches long.

Effluent Distribution
The ATL System can accommodate all methods of effluent distribution, including gravity, pump-to-gravity, serial, and pressure distribution.

Pressure Distribution
If pressure distribution is used with the ATL System, all aspect of the pressure distribution system shall be designed and installed in accordance with Section 4.19 Pressure Distribution System of the TGM, with the exception of orifice orientation. The orifices in the distribution lateral shall be oriented towards the top of the pipe. See page 22 for detailed pressure distribution installation instructions.

Serial Distribution
The use of raised connections is recommended in serial distribution designs. The raised connection should be designed to increase the invert of the ATL conduit row up to, but no higher than, the top of the ATL conduit. See page 22 for more information.

Dosed Systems
If effluent is pumped to the ATL System, the maximum volume per cycle shall not exceed 20% of the estimated daily design flow. If the total dose volume is too small, then the pipe network will not become fully pressurized or may not be pressurized for a significant portion of the total dosing cycle and may need to be adjusted

Distribution Boxes
A distribution box is recommended to be used to separate flows equally between multiple trenches or separate beds. The distribution box shall meet all requirements of Section 3.2.5.2 Distribution Box of the TGM. The inlet port from the septic tank to the distribution box shall be higher than the outlet ports to allow for proper drainage to the ATL conduit rows.

Fill and Cover Materials
All cover and fill materials must conform to the requirements of the current edition of the TGM.

DEQ requires covering the drainfield with topsoil with a minimum of 12 inches and maximum of 36 inches (IDAPA 58.01.03.008.04 and TGM 3.2.7.2 Soil Cover). A geotextile barrier shall be placed between the uppermost sand layer and ATL conduit row and topsoil prior to backfilling.

Minimum Separation Distances
Horizontal separation distances (setbacks) shall meet the requirements of the TGM, and shall be measured from the outside aspect of the system sand.

Vertical separation distances shall meet the specifications detailed in Table 4-19. Recirculating gravel filter vertical separation to limiting layers (feet), and Table 1 below. Vertical separation distances shall be measured from the bottom of the 12-inch layer of system sand below the conduit rows. The bottom of the installed system sand shall be a minimum of 12 inches from the seasonal and normal high water table.

Limiting Layer	**Flow < 2,500 GPD All Soil Types**	**Flow > 2,500 GPD All Soil Types**
Impermeable layer	2	4
Fractured rock or very porous layer	1	2
Normal high ground water	1	2
Seasonal high ground water	1	2

Table 2: ATL System vertical separation to limiting layers (feet)

Minimum Conduit Lengths
The minimum design length of ATL conduit in residential applications is 70 linear feet., or 1 bedroom. Each additional bedroom requires an additional 70 linear feet of ATL conduit. For commercial applications, ATL conduit length shall be calculated at 2.14 GPD/lf. All wastewater discharging to a subsurface system must be pre-treated to domestic strength effluent prior to discharge to the field.

Number of Bedrooms	**Minimum ATL conduit Length (ft)**
1	70
2	140
3	210
4	280
5	350
Each Additional	70

Table 3: Minimum ATL conduit lengths

Note: Individual ATL conduits shall not be cut or modified.

Minimum System Size
Each ATL System in a residential application shall be comprised of trench or bed bottom area and linear feet of ATL conduit to meet the design requirements for a 3-bedroom home in the system design soil group.

3-Foot Wide Trench

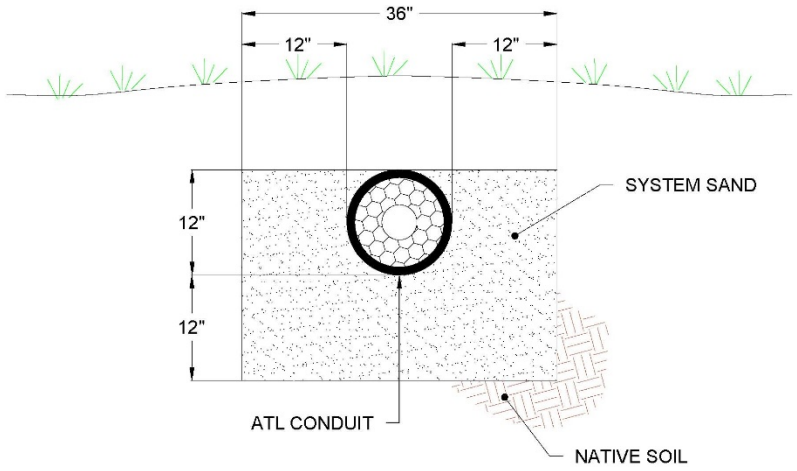

5-Foot-Wide Trench

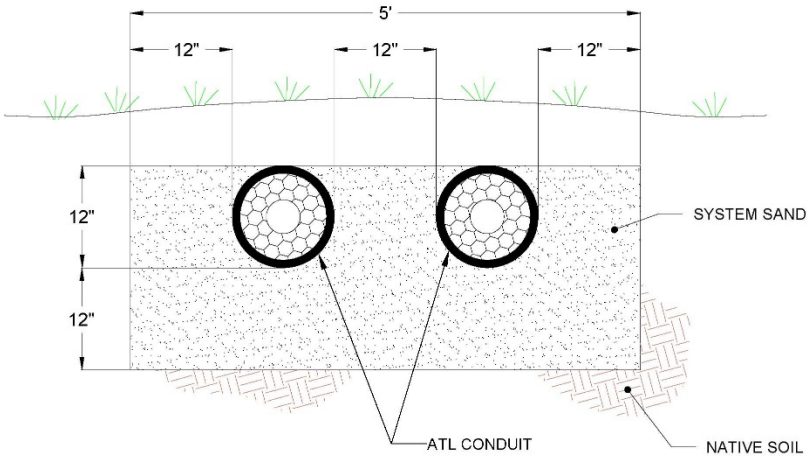

6-Foot-Wide Trench

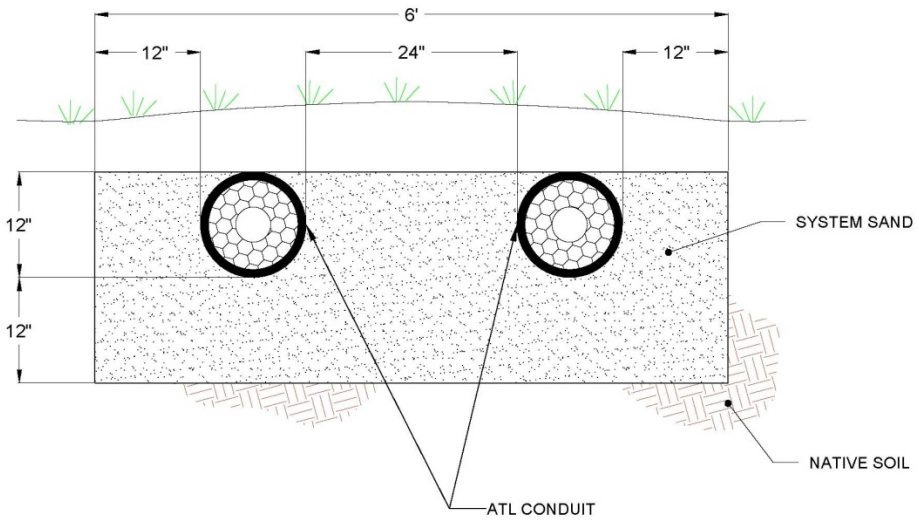

Trench Configuration – Plan View

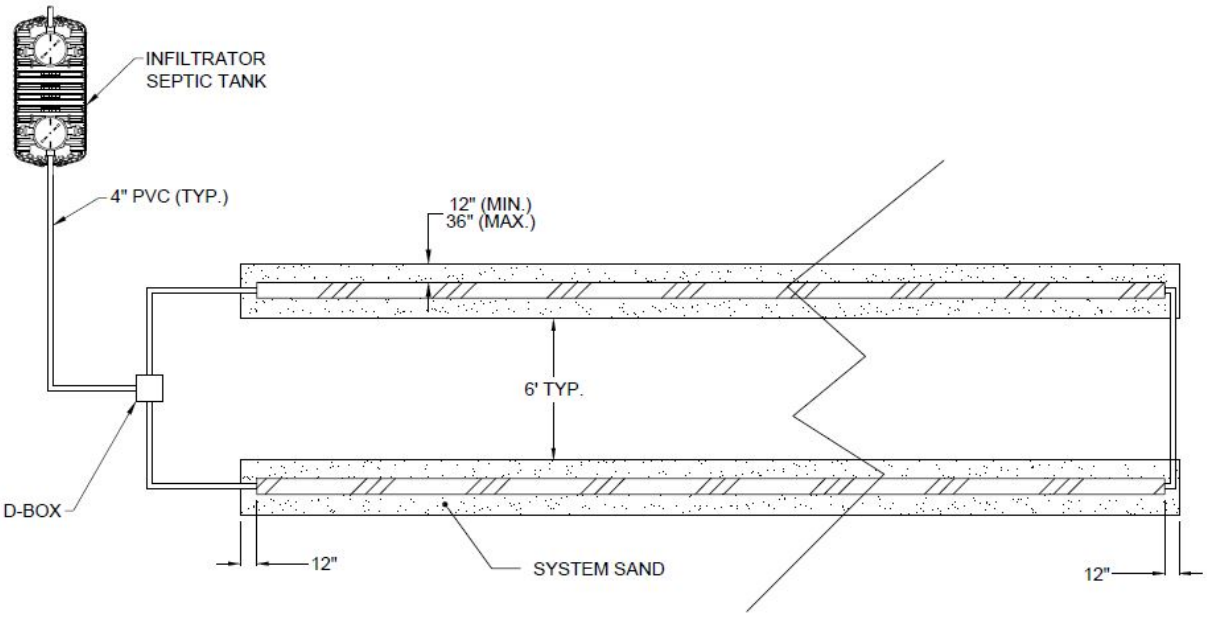

Bed Configuration

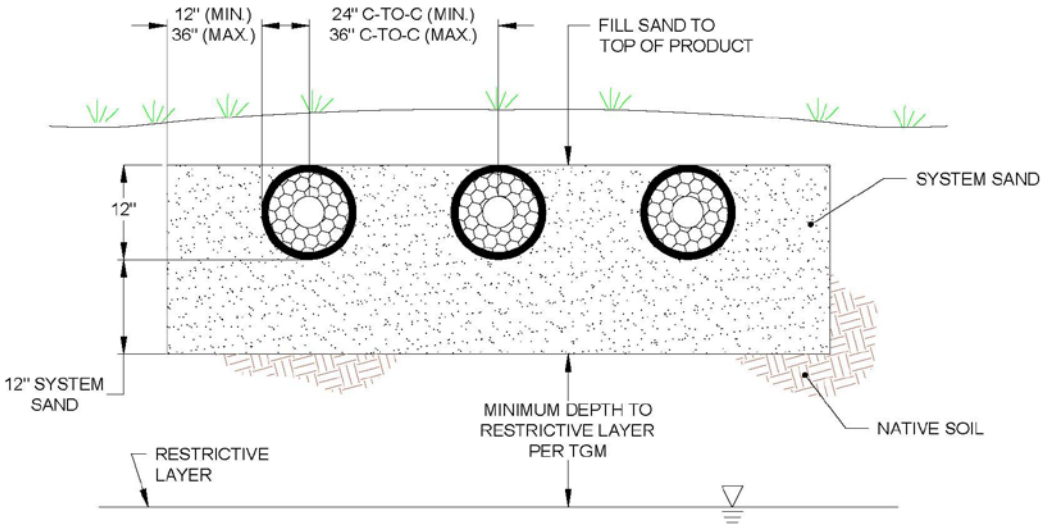

Bed Configuration – Plan View

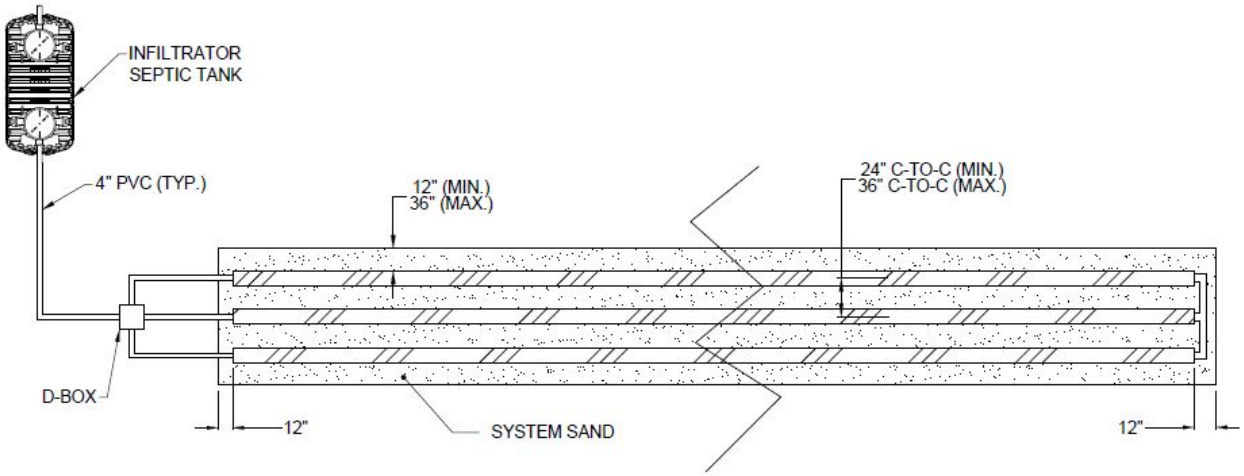

NOTES:

1. Drawings are not to scale.
2. Number and length of conduits per design.
3. Venting is not required but is optional at the discretion of the designer.
4. Pumping is not required unless gravity flow cannot be achieved.
5. Observation ports are optional, per design.
6. The ATL System is intended for use in non-traffic applications.

Above-Grade Capping Fill System

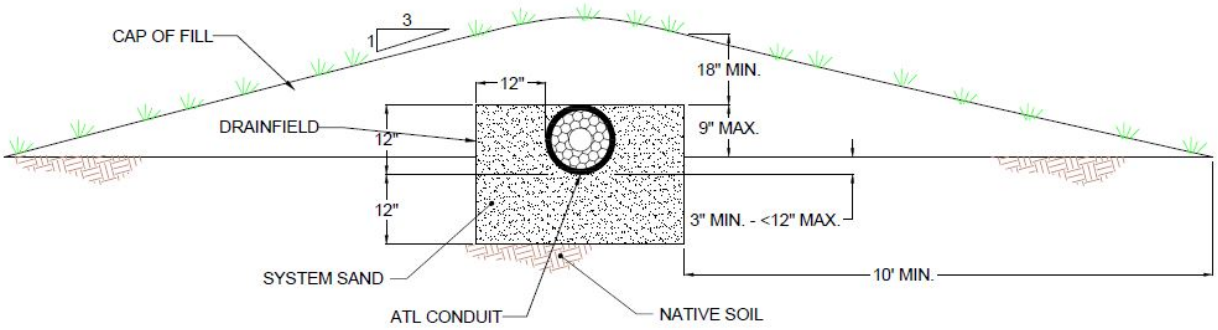

NOTES:

1. Bottom of the ATL conduit must be at least three inches below the native soil grade.
2. Minimum separation distances must be maintained between excavation bottom and limiting layer.
3. All aspects of Section 4.3.3 Above-Grade Capping Fill System in the TGM are applicable to design and installation.

TRENCH SYSTEM

Designing the ATL System in Idaho in trench configuration is a five-step process.

1. *Determine the minimum total ATL conduit length required*
2. *Determine the minimum area in square feet of bottom surface required*
3. *Select a trench width*
    a. *minimum 3 feet; maximum 6 feet*
4. *Calculate the total trench length required*
5. *Modify design trench length and/or width as necessary*

Step 1: Determine the minimum total ATL conduit length required

Use Table 2 to determine the minimum length of ATL conduit per bedroom required:

Number of Bedrooms	Minimum Total ATL Conduit Length (ft)
1	70
2	140
3	210
4	280
5	350
Each Additional	70

Table 2: Minimum total ATL conduit length

Step 2: Determine the minimum area in square feet of bottom surface required (ft^2)

Based upon the soil type determined in the site investigation, reference Table3 below to determine the minimum area in square feet of bottom surface required.

	Minimum Area of Bottom Surface Required (sq ft)						
	Application Rate (GPD/sq ft) / Soil Design Subgroup						
Bedrooms	**1.7 / A-1**	**1.2 / A-2a**	**1.0 / A-2b**	**0.8 / B-1**	**0.6 / B-2**	**0.4 / C-1**	**0.3 / C-2**
1	89	125	150	188	250	375	500
2	118	167	200	250	334	500	667
3	148	209	250	313	417	625	834
4	177	250	300	375	500	750	1000
5	206	292	350	438	584	875	1167
Each Additional	30	42	50	63	84	125	167

Table 3: Minimum area of bottom surface required (ft^2)

Step 3: Select a trench width

Individual trenches shall be a minimum of 3-feet wide and a maximum of 6-feet wide. The system should be designed as long and narrow as site conditions allow.

Divide the minimum area in square feet of bottom surface required by the minimum length of ATL conduit per bedroom required to get guidance on an appropriate trench width for the ATL System.

Step 4: Calculate the total trench length required

Divide the minimum area in square feet of bottom surface required as determined in Step 2 by the trench width selected in Step 3 to calculate the total trench length required.

Step 5: Modify design trench length and width as necessary

The design trench width or length may be modified in order to maximize the relationship between the total ATL conduit length required and the minimum area in square feet of bottom surface required, while meeting the following trench design requirements:

NOTES:

1. *Minimum trench length is 30 ft; maximum trench length is 100 ft.*
    a. *If the total trench length required is less than 30 ft, either:*
        i. *increase the length of the trench to 30 ft; or*
        ii. *decrease the selected width of the trench (Step 3) to increase the length to beyond 30 ft.*
    b. *If the total trench length required is greater than 100 ft; either:*
        i. *divide the trench into multiple trenches; or*
        ii. *increase the selected width of the trench (Step 3) to decrease the length to less than 100 ft.*
2. *ATL conduits come in 10-foot lengths; all ATL conduit-length calculations shall be rounded up to the nearest 10-foot increment.*
3. *ATL conduit rows must extend to 12 inches of each end of the trench.*
    a. *Final trench lengths will include the 12-inch-wide sand extension on each end of the trench.*
4. *The system should be designed as long and narrow as site conditions allow.*

The following sample system design calculations are intended to illustrate the methodology for designing the ATL System. The sample system design calculations are provided in the step-by-step format described above.

Example I.

System sample specifications:

- 4-bedroom home
- Soil: B-2; 0.6 gal/ft^2/day hydraulic application rate

Step 1: Determine the minimum total ATL conduit length required

Referencing Table 2, the minimum total length of ATL conduit required is 280 ft.

Number of Bedrooms	Minimum Total ATL Conduit Length (ft)
1	70
2	140
3	210
4	280
5	350
Each Additional	70

Table 2: Minimum total ATL conduit length

Step 2: Determine the minimum area in square feet of bottom surface required (ft^2)

Referencing Table 3, the minimum area in square feet of bottom surface required is 500 sf.

	Minimum Area of Bottom Surface Required (sq ft)						
	Application Rate (GPD/sq ft) / Soil Design Subgroup						
Bedrooms	**1.7 / A-1**	**1.2 / A-2a**	**1.0 / A-2b**	**0.8 / B-1**	**0.6 / B-2**	**0.4 / C-1**	**0.3 / C-2**
1	89	125	150	188	250	375	500
2	118	167	200	250	334	500	667
3	148	209	250	313	417	625	834
4	177	250	300	375	500	750	1000
5	206	292	350	438	584	875	1167
Each Additional	30	42	50	63	84	125	167

Table 3: Minimum area of bottom surface required (ft^2)

Step 3: Select a trench width

500 sf (minimum area in square feet of bottom surface required – Step 2) divided by 280 ft (minimum length of ATL conduit per bedroom required – Step 1) = 1.8 ft.

Select 3 ft.

Step 4: Calculate the total trench length required

500 sf (minimum area in square feet of bottom surface required - Step 2) divided by 3 ft (trench width selected - Step 3) = 166.7 ft (total trench length required).

Step 5: Modify design trench length and width as necessary

Utilizing a 3-ft-wide trench, 166.7 linear feet (lf) of trench will require use of 170 lf of ATL conduit (*ATL conduits are 10-feet long and may not be cut*).

Check that minimum total length of ATL conduit requirement is being met:

> A 4-bedroom house requires a minimum of 280 linear feet of ATL conduit. As a result, the minimum trench length of 170 linear feet must be adjusted to 280 linear feet.
>
> Proposed design: Four 3-foot-wide trenches, each 72 feet in length (70 feet of ATL conduit and 2 feet of sand extension - 1 foot on each end). 4 rows times 70 lf/row = 280 lf of ATL conduit.

Check that minimum area in square feet of bottom surface requirement as designed is being met:

> 72 lf of trench X 3-ft-wide trench = 216 sf/trench X 4 trenches = 864 sf.
> 500 sf required. Minimum area in square feet of bottom surface requirement is met.

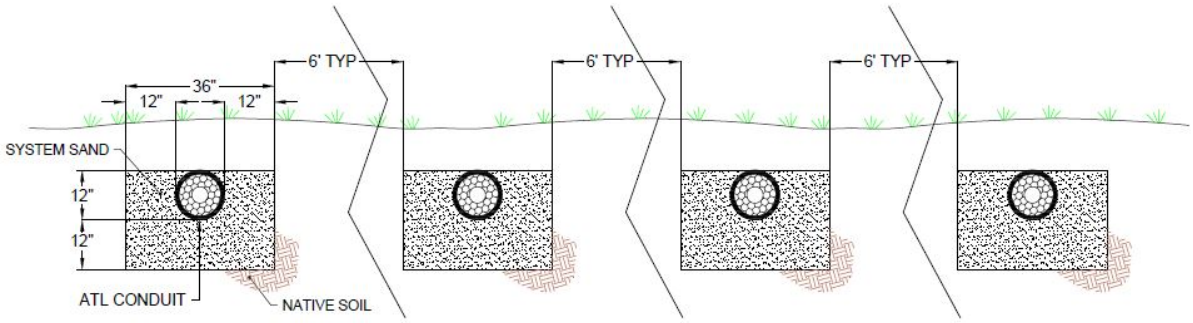

Example II.

System sample specifications:

- 3-bedroom home
- Soil: C-1; 0.4 gal/ft^2/day hydraulic application rate

Step 1: Determine the minimum total ATL conduit length required

Referencing Table 2, the minimum total length of ATL conduit required is 210 ft.

Number of Bedrooms	Minimum Total ATL Conduit Length (ft)
1	70
2	140
3	210
4	280
5	350
Each Additional	70

Table 2: Minimum total ATL conduit length

Step 2: Determine the minimum area in square feet of bottom surface required (ft^2)
Referencing Table 3, the minimum area in square feet of bottom surface required is 625 sf.

	Minimum Area of Bottom Surface Required (sq ft)						
	Application Rate (GPD/sq ft) / Soil Design Subgroup						
Bedrooms	**1.7 / A-1**	**1.2 / A-2a**	**1.0 / A-2b**	**0.8 / B-1**	**0.6 / B-2**	**0.4 / C-1**	**0.3 / C-2**
1	89	125	150	188	250	375	500
2	118	167	200	250	334	500	667
3	148	209	250	313	417	▶625	834
4	177	250	300	375	500	750	1000
5	206	292	350	438	584	875	1167
Each Additional	30	42	50	63	84	125	167

Table 3: Minimum area of bottom surface required (ft^2)

Step 3: Select a trench width
625 sf (minimum area in square feet of bottom surface required – Step 2) divided by 210 ft (minimum length of ATL conduit per bedroom required – Step 1) = 2.97 ft.

Select 3 ft.

Step 4: Calculate the total trench length required
625 sf (minimum area in square feet of bottom surface required - Step 2) divided by 3 ft (trench width selected - Step 3) = 208.3 ft (total trench length required).

Step 5: Modify design trench length and width as necessary
Utilizing a 3-ft-wide trench, 208.3 linear feet (lf) of trench will require use of 210 lf of ATL conduit (ATL conduits are 10-feet long and may not be cut).

Check that minimum total length of ATL conduit requirement is being met:

> A 3-bedroom house requires a minimum of 210 linear feet of ATL conduit. The minimum trench length of 210 linear feet meets the 210 linear feet of ATL conduit requirement.
>
> Proposed design: Three 3-foot-wide trenches, each 72 feet in length (70 feet of ATL conduit and 2 feet of sand extension - 1 foot on each end). 3 rows times 70 lf/row = 210 lf of ATL conduit.

Check that minimum area in square feet of bottom surface requirement as designed is being met:

> 72 lf of trench X 3-ft-wide trench = 216 sf/trench X 3 trenches = 648 sf.
> 625 sf required. Minimum area in square feet of bottom surface requirement is met.

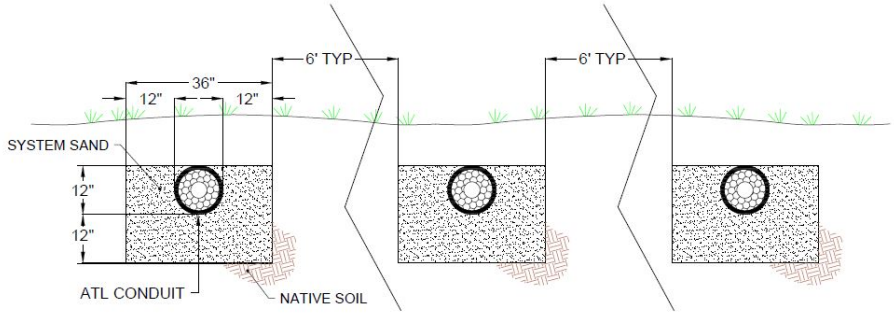

BED SYSTEM

Designing the ATL System in Idaho in trench configuration is a five-step process.

1. *Determine the minimum total ATL conduit length required*
2. *Determine the minimum area in square feet of bottom surface required*
3. *Select an ATL conduit row length*
    a. ATL conduit rows within the bed must be of equal length.
4. *Calculate the required bed width*
5. *Modify design bed dimensions as necessary*

Step 1: Determine the minimum total ATL conduit length required

Use Table 2 to determine the minimum length of ATL conduit per bedroom required:

Number of Bedrooms	Minimum Total ATL Conduit Length (ft)
1	70
2	140
3	210
4	280
5	350
Each Additional	70

Table 2: Minimum total ATL conduit length

Step 2: Determine the minimum area in square feet of bottom surface required (ft^2)

Based upon the soil type determined in the site investigation, reference Table 3 below to determine the minimum area in square feet of bottom surface required.

	Minimum Area of Bottom Surface Required (sq ft)						
	Application Rate (GPD/sq ft) / Soil Design Subgroup						
Bedrooms	**1.7 / A-1**	**1.2 / A-2a**	**1.0 / A-2b**	**0.8 / B-1**	**0.6 / B-2**	**0.4 / C-1**	**0.3 / C-2**
1	89	125	150	188	250	375	500
2	118	167	200	250	334	500	667
3	148	209	250	313	417	625	834
4	177	250	300	375	500	750	1000
5	206	292	350	438	584	875	1167
Each Additional	30	42	50	63	84	125	167

Table 3: Minimum area of bottom surface required (ft^2)

Step 3: Select an ATL conduit row length

Select an appropriate length of the ATL conduit rows based upon the minimum length of ATL conduit required and site considerations. Long and narrow systems are recommended.

Divide the minimum area in square feet of bottom surface required by the ATL conduit row length selected to determine the number of ATL conduit rows. Each ATL conduit row within the bed must be of equal length.

Step 4: Calculate the required bed width

Divide the minimum area in square feet of bottom surface required as determined in Step 2 by the ATL conduit row length selected in Step 3 to calculate the approximate required bed width.

Step 5: Modify design bed dimensions as necessary

The bottom surface area of the proposed bed design (system sand footprint) must meet or exceed the minimum bottom surface area required as determined in Step 2 (Table 3). If the proposed bed design does not result in a system sand footprint area greater than the minimum bottom surface area required, adjustments must be made to the bed design.

In all ATL System bed designs, the following requirements must be met:

NOTES:

1. *Minimum ATL conduit row length is 30 ft; maximum ATL conduit row length is 100 ft.*
    a. *If the total ATL design bed length is greater than 100 ft, either:*
        i. *the number of ATL conduit rows must be increased in order to reduce the length of each individual row to less than 100 feet; or*
        ii. *the bed must be divided the into multiple beds.*
2. *Individual ATL conduit rows must be separated by a minimum of 12-inches of system sand, with a maximum center-to-center spacing of 3 feet.*
3. *ATL conduits come in 10-foot lengths; all ATL row lengths in a given bed shall be in 10-foot increments.*
4. *ATL conduit rows must extend to 12 inches of each end of the trench.*
    a. *Final bed length will include the 12-inch-wide sand extension on each end of the ATL conduit rows.*
5. *The outermost ATL conduit rows must be no greater than 36 inches from the edge of the bed.*
6. *The system should be designed as long and narrow as site conditions allow.*

The following sample system design calculations are intended to illustrate the methodology for designing the ATL System in a bed configuration. The sample system design calculations are provided in the step-by-step format described above.

Example I.

System sample specifications:

- 4-bedroom home
- Soil: C-1; 0.4 gal/ft^2/day hydraulic application rate

Step 1: Determine the minimum total ATL conduit length required

Referencing Table 2, the minimum total length of ATL conduit required is 280 ft.

Number of Bedrooms	Minimum Total ATL Conduit Length (ft)
1	70
2	140
3	210
4	280
5	350
Each Additional	70

Table 2: Minimum total ATL conduit length

Step 2: Determine the minimum area in square feet of bottom surface required (ft^2)

Referencing Table 3, the minimum area in square feet of bottom surface required is 750 sf.

	Minimum Area of Bottom Surface Required (sq ft)						
	Application Rate (GPD/sq ft) / Soil Design Subgroup						
Bedrooms	**1.7 / A-1**	**1.2 / A-2a**	**1.0 / A-2b**	**0.8 / B-1**	**0.6 / B-2**	**0.4 / C-1**	**0.3 / C-2**
1	89	125	150	188	250	375	500
2	118	167	200	250	334	500	667
3	148	209	250	313	417	625	834
4	177	250	300	375	500	750	1000
5	206	292	350	438	584	875	1167
Each Additional	30	42	50	63	84	125	167

Table 3: Minimum area of bottom surface required (ft^2)

Step 3: Select an ATL conduit row length

280 ft (minimum length of ATL conduit per bedroom required – Step 1) ÷ 4 = 70ft.

Initial design shall include 4 rows of ATL conduit at 70 linear feet each. Add minimum sand extension on each end of 12 inches to create 72-foot-long bed length.

With 12 inches of systems sand between each row, and a 12-inch-wide sand extension on each side of the bed design, the bed width is 9 feet. The system sand footprint is 72’ X 9’ = 648 sf.

Step 4: Calculate the Calculate the required bed width
750 sf (minimum area in square feet of bottom surface required - Step 2) ÷ 72 ft (length of ATL conduit rows selected - Step 3) = 10.4 ft (width of bed required).

Step 5: Modify design trench length and width as necessary
The minimum bottom surface area required (Step 2, Table 3) is 750 sf. The proposed bed design offers 648 sf of bottom surface area. Adjustments must be made to increase the design bottom surface area to meet or exceed the required bottom surface area.
Adjustment calculations:

• *Divide the required absorption bed area by the length of the system sand footprint (proposed bed design).*	750 sf ÷ 72 ft = 10.42 ft
• *Subtract the system sand footprint width from the required width as calculated above to determine the total sand extension required.* ***NOTE:*** *Round up to feet/inches for ease of installation.*	10.42 ft – 9 ft = 1.42 ft
• *The design system width must be widened by 1.42 ft, by adding a 9-inch-wide sand extensions on each side, resulting in a total bottom surface area of 756 sf:*	72 ft x 10.5 ft = 756 sf

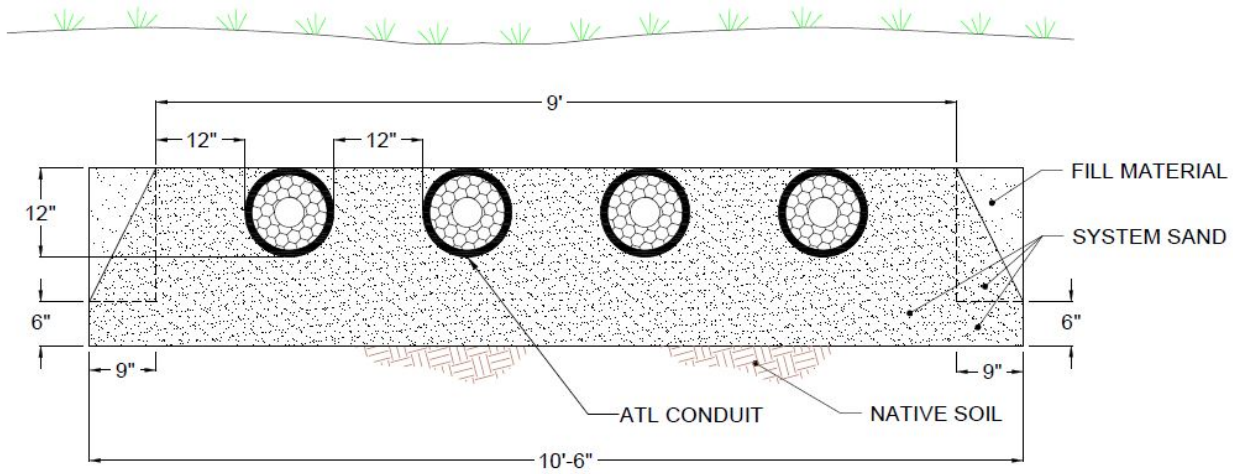

Basic rules of onsite sewage treatment system use and care apply to the ATL System. System owners shall operate the system in accordance with the procedures and specifications described in the TGM, all local regulations, and the following:

System Use and Abuse

Your ATL System is intended for use with residential-strength wastewater within the design daily flow volume. To ensure long-term function of your system:

- Keep daily wastewater flow within design parameters.
- Do not connect the rainwater management system to the ATL System.
- Direct water from the rainwater management system away from the ATL System.
- Solvents, paint, pharmaceuticals, aggressive cleaning products, and non-biodegradable items should not enter the ATL System.
- Solids, such as but not limited to, cigarette butts, diapers, feminine hygiene products, cat litter, and paper towels should not be introduced into the ATL system.

- Introduce only normal residential wastewater into the system
- Maintain leak-free household plumbing fixtures, such as faucets and toilets.
- Do not utilize a garbage grinder.
- The ATL System is intended for use in non-traffic applications.

Operation and Maintenance

Your ATL System has no specific operating instructions. Proper use of the system as noted above is the primary operating concern.

Maintenance of the ATL System includes the following:

- If the septic tank has an effluent filter, it should be cleaned by a qualified professional on an annual basis.
- The septic tank should be pumped on a regular basis and, if concrete, checked for leaks and cracks. The interval for septic tank pumping varies depending upon use. Check with a qualified professional or your local health department for the appropriate pumping interval.
- If present, the alarm system should be tested annually by a qualified professional to ensure that it is functional.

If at any time you have concerns about the use, operation, or maintenance of your ATL System, contact the Infiltrator's Technical Services Department at 1-800-221-4436.

System Start-up

There are no specific requirements for placing the ATL System into service. If the system has an alarm, a qualified professional should, after system use has been initiated, test the alarm to ensure it is functional.

Intermittent Use

The ATL System is designed for intermittent use, and requires no special attention if it is to be placed out of use for extended periods of time.

Trouble Shooting

In the event that any of the following indicators arise, contact a qualified professional.

- Wastewater back-up into the dwelling
- Persistent septic odor
- Unusually wet area atop and/or around the system
- "Breakout" of effluent along the side of a slope or other landscape feature

Repair

A qualified professional shall be contacted when there are indications of malfunction with the ATL System. When visiting the site, the qualified professional should, at a minimum, do the following:

- Assess the present condition of the ATL System and the surrounding area
- Research the history of use, including:
    - water volume use
    - contaminants
- Evaluate the site for groundwater intrusion
- Inspect the septic tank
- Inspect the conduit rows
- Check faucet and toilet function

Upon completion of the site visit, the qualified onsite wastewater system professional should contact the Infiltrator's Technical Services Department with the inspection report.

These installation instructions are for the ATL System in Idaho. ATL Systems may only be installed according to this manual, IDAPA 58.01.03, and any other local regulations.

If unsure of the installation requirements for a site, contact the qualified professional responsible for the design. If unsure of the use of the ATL System, contact Infiltrator. A permit which includes the soil evaluation and the design of the onsite system must be filed with and accepted by the local health department before installation.

Before You Begin

Materials and Equipment Needed

- conduits
- System sand
- PVC pipe and couplings
- Backhoe
- Laser or transit
- Shovel and rake
- Observation port and cap per design
- Endcaps
- 4-in internal corrugated pipe couplers
- Tape measure

Common practices shall apply to the installation of the ATL System. These include, but are not limited to:

- avoid soil compaction on the infiltrative surface area, including all areas downslope of a sloped system; and
- install the conduits and system sand on the same day that the system footprint is excavated/exposed.

The use of tracked vehicles for material installation is preferred.

Excavating and Preparing the Site

NOTE: *The ATL System may not be installed during periods when the soil is sufficiently wet to exceed its plastic limit, as this causes machinery to smear the soil.*

1. Stake out the locations of tank(s), pipes, conduit rows, and corners of the system to be scarified/excavated, per design. Set the elevations as shown on the approved plan. *[**NOTE:** The proper elevation of solid PVC header line going to each conduit row should be determined to ensure compliance with the required system bottom depth as shown* on *the approved permit. This height may vary dependent on system height and configuration used.]*
2. Install sedimentation and erosion control measures. *[**NOTE:** The installation of temporary drainage swales/berms (surface diversions) may be necessary to protect the site during rainfall events.]*
3. Excavate the trench or bed area per design.
4. Rake the trench or bed bottom and sides if smearing has occurred during excavation. Remove large stones and cut off protruding roots, fill voids with compacted system sand. *[**NOTE:** Smearing does not occur in sandy soils, so raking is not necessary. In fine textured soils (silts and clays), avoid walking on the excavation bottom to prevent compaction and loss of soil structure.]*
5. Verify that the trench or bed area is at the proper slope from side-to-side and from end-to-end using a transit or laser.

Installing the System

1. Install the system sand over the entire ATL System trench or bed area as per design. System sand should be leveled and stabilized prior to introduction of the conduits. The installer should retain records verifying that system sand meets the specifications for medium sand in Section 3.2.8.1.2 of the TGM.
2. Remove plastic stretch wrap from conduits.
3. Place conduits on the surface of the system sand with the white stripe/seam in the 12 o'clock position, arranged in the configuration shown on the system design. Using the provided 4-in-diameter internal pipe couplings, connect the conduits end-to-end to create rows of the required length.
4. Conduits shall be installed level. A laser level or transit is recommended to ensure proper alignment.
5. Conduit rows shall be:
   - installed on a level plane with one another;

- be installed parallel to any contours;
- be separated by a minimum of 12 in of system sand; and
- be installed with the white stripe/seam oriented in the 12 o'clock position.

NOTE: *Individual ATL conduits shall not be cut or modified.*

6. In serial distribution applications, use of a raised connection is recommended. One example of a raised connection is shown below:

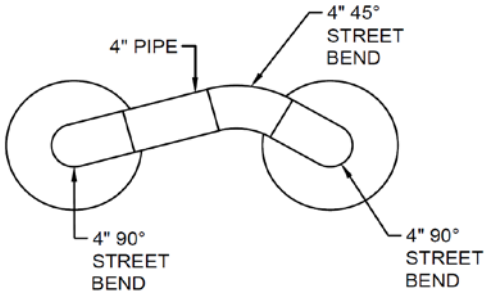

7. Install a cap on the end of each conduit row that is not connected with piping.
8. Once the conduit is placed on the surface of the system sand and distribution piping is connected to the conduits per design, additional system sand shall be ladled beside and between, and to the top, of each of the conduit rows. System sand shall also be installed on each side and at each end of the backfilled conduit rows, per the design. This additional system sand shall be stabilized. Where possible, all machine work should be done from the uphill side of the infiltration area to reduce possible compaction of the receiving soil area.

Installing Vents

NOTE: *If design of the ATL System includes venting, the following instructions are provided.*

<u>For gravity systems:</u>

1. A low vent is installed through an offset adapter at the end of each section, bed, or attached to a vent manifold, with a minimum 3-ft pipe extending above final grade.
2. The internal house plumbing and roof vent act as the high vent for the system.

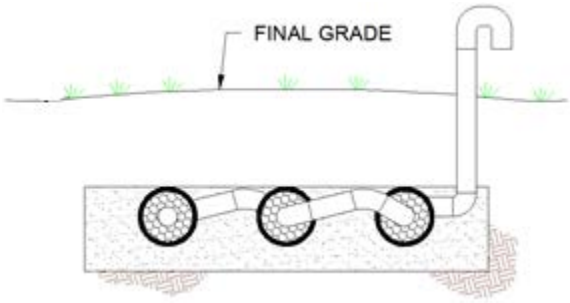

<u>For pressurized and pump-to-gravity systems:</u>

1. A low vent is installed through an offset adapter at the end of each section, bed, or attached to a vent manifold, with a minimum 3-ft pipe extending above final grade.
2. A high vent must maintain a minimum 10-ft vertical separation from the low vent, and may be installed in one of the following locations:
   - directly at the d-box; or
   - located remotely (along a nearby tree line, or other less conspicuous spot).

NOTE: *In pump-to-gravity applications, the internal house plumbing and roof vent may act as the system's high vent. To accomplish this, a minimum 3-inch diameter pipe must be installed between the d-box and septic tank to bypass the small diameter pressure distribution main.*

Installing Observation/Monitoring Ports

If observation or monitoring ports are specified in the system design:

1. Cut a 6-inch PVC pipe to the desired length, ensuring the pipe will extend a minimum of 6 inches above final grade.
2. Drill a minimum of ten ¼" to ½" holes within ½ to 6 inches of the bottom of the pipe, and wrap the bottom end of the pipe in filter fabric.
3. Install the monitoring pipe at the appropriate location, based on site conditions, and

ensure the bottom of the pipe is at the bottom of the system sand footprint (at the system sand/native soil interface).

4. Install a removable, water-tight, secure cover cap.

Installing Pressure Distribution

If pressure distribution is preferred, the pressure distribution system shall be designed and installed in accordance with Section 4.19 Pressure Distribution System of the TGM, with the exception of orifice orientation. The orifices in the distribution lateral shall be oriented towards the top of the pipe.

The distribution laterals should be placed within the 4–inch-diameter ATL conduit distribution pipe for the entire length of each ATL conduit row, as shown below.

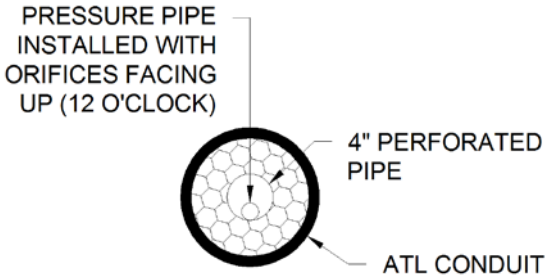

In accordance with Section 4.19.3.1 Piping, sweeping cleanouts should be placed at the terminal end of each lateral and be accessible from grade, and should be the same diameter piping as the main lateral.

- A ball valve or threaded cap should be located on the end of the cleanout that allows the lateral to be flushed.
- Prior to pressurization of the distribution laterals, the system should be flushed with clean water while all of the terminal ball valves are open or caps are removed.
- Cleanout access risers shall not extend past the installation depth of the drainfield and native soil or medium sand interface."

In order to ensure that the small-diameter laterals are placed at the bottom of the 4-inch distribution pipe within the ATL conduit row, drill an appropriately-sized hole in the 4" end cap at its bottom (see picture below):

Covering the System

NOTE: *Before backfilling, the system shall be inspected as required in the TGM and in compliance with all local ordinances and procedures.*

1. Material placed around the system sand and atop the conduits may be additional system sand or material which meets the requirements of the TGM.
2. Backfill the trench(es) or bed by pushing material over the ATL System. Cover material shall be a minimum of 12 inches and a maximum of 36 inches deep. It is best to mound several extra inches of soil over the finish grade to allow for settling. This also ensures that runoff is diverted away from the system.
   *[**NOTE:** Do not drive over the system while backfilling in sand.]*
3. After the system is covered, the site should be seeded or sodded. Ensure that sand-based sod, and not clay-based sod, is used to mitigate the potential for erosion.

NOTE: *If the system is for new home construction, it is important to leave marking stakes along the boundary of the system.*

INFILTRATOR WATER TECHNOLOGIES, LLC ("Infiltrator")
ATL SYSTEM STANDARD LIMITED WARRANTY

(a) The structural integrity of the Infiltrator ATL System conduits manufactured by Infiltrator (collectively referred to as "Units"), when installed and operated in a leachfield of an onsite septic system in accordance with Infiltrator's installation instructions, is warranted to the original purchaser ("Holder") against defective materials and workmanship for one year from the date upon which Letter of Certification is issued for the septic system containing the Units provided, however, that if a septic permit is not required for the septic system by applicable law, the one (1) year warranty period will begin upon the date that installation of the septic system commences. In order to exercise its warranty rights, Holder must notify Infiltrator in writing at its corporate headquarters in Old Saybrook, Connecticut within fifteen (15) days of the alleged defect. Infiltrator will supply replacement Units for those Units determined by Infiltrator to be defective and covered by this Limited Warranty. Infiltrator's liability specifically excludes the cost of removal and/or installation of the Units.

(b) THE LIMITED WARRANTY AND REMEDIES IN SUBPARAGRAPH (a) ARE EXCLUSIVE. THERE ARE NO OTHER WARRANTIES WITH RESPECT TO THE UNITS, INCLUDING NO IMPLIED WARRANTIES OF MERCHANTABILITY OR FITNESS FOR A PARTICULAR PURPOSE.

(c) This Limited Warranty shall be void if any part of the ATL System components is manufactured by anyone other than Infiltrator. The Limited Warranty does not extend to incidental, consequential, special or indirect damages. Infiltrator shall not be liable for penalties or liquidated damages, including loss of production and profits, labor and materials, overhead costs, or other losses or expenses incurred by the Holder or any third party. Specifically excluded from Limited Warranty coverage are damage to the Units due to ordinary wear and tear, alteration, accident, misuse, abuse or neglect of the Units; the Units being subjected to vehicle traffic or other conditions which are not permitted by the installation instructions; failure to maintain the minimum ground covers set forth in the installation instructions; the placement of improper materials into the system containing the Units; failure of the Units or the septic system due to improper siting or improper sizing, excessive water usage, improper grease disposal, or improper operation; or any other event not caused by Infiltrator. This Limited Warranty shall be void if the Holder fails to comply with all of the terms set forth in this Limited Warranty.

Further, in no event shall Infiltrator be responsible for any loss or damage to the Holder, the Units, or any third party resulting from installation or shipment, or from any product liability claims of Holder or any third party. For this Limited Warranty to apply, the Units must be installed in accordance with all site conditions required by state and local codes; all other applicable laws; and Infiltrator's installation instructions.

(d) No representative of Infiltrator has the authority to change this Limited Warranty in any manner whatsoever, or to extend this Limited Warranty. No warranty applies to any party other than the original Holder.

* * * * * * *

The above represents the standard Limited Warranty offered by Infiltrator. A limited number of states and counties have different warranty requirements. Any purchaser of Units should contact Infiltrator's corporate headquarters in Old Saybrook, Connecticut, prior to such purchase, to obtain a copy of the applicable warranty, and should carefully read that warranty prior to the purchase of Units.

INFILTRATOR®
water technologies

P.O. Box 768 • Old Saybrook, CT 06475
800-221-4436

Appendix C

LOWeFLOW Treatment System Design Manuals for Idaho and Sampling Plan (revised 2018)

***LOWeFLOW*™ Treatment System Design Manual Idaho January 2018**

Manufactured by:

Lowridge Onsite Technologies
PO Box 1179
Lake Stevens, WA 98258
877 476-8823
info@lowridgetech.com

Introduction:

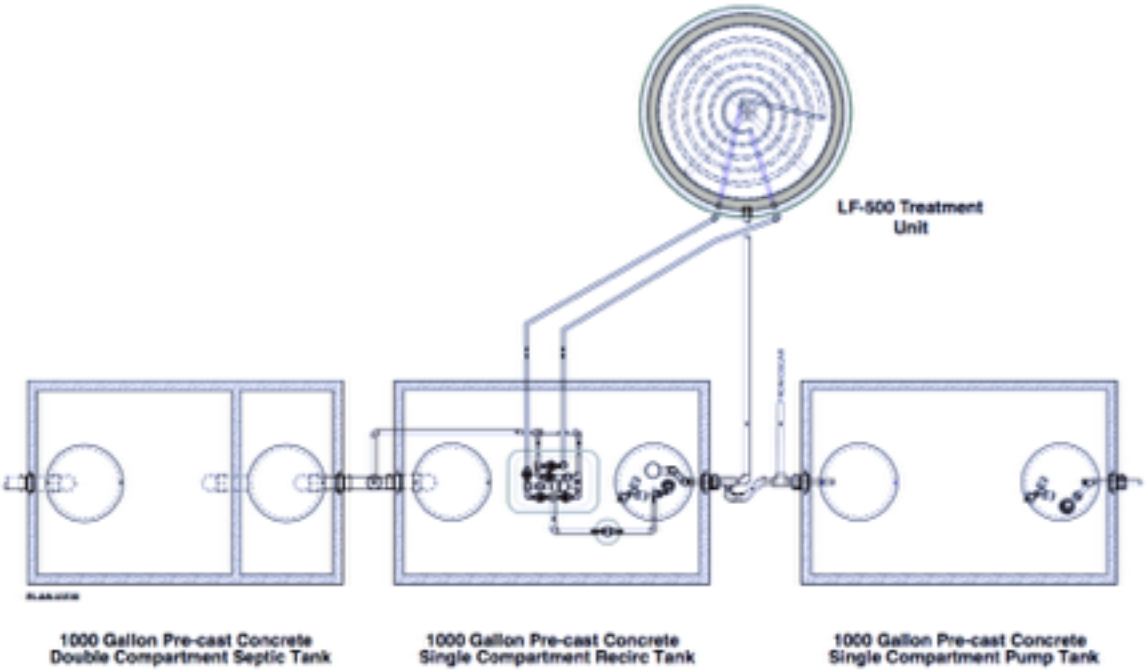

Figure 1. Septic tank, recirc tank, discharge/clarifier tank, and *LOWeFLOW* filter.

***LOWeFLOW*™ Treatment Unit**

The *LOWeFLOW*™ treatment unit is comprised of the *LOWeFLOW*™ recirculation filter, a septic tank, recirculation tank, discharge/clarification tank, headworks, and control equipment.

Wastewater is collected in a standard septic tank where gross solids are settled out and primary treatment occurs. Septic tank effluent flows from the septic tank into the recirculation tank. Liquid in the recirculation tank is mixed with treated filtrate from the *LOWeFLOW*™ filter. The mixed liquid is dosed to a drip tubing network called a *Coil* in the top of the *LOWeFLOW* ™ filter. Treated filtrate trickles down through the media and is collected in the underdrain. From there it flows from the *LOWeFLOW*™ filter back to the recirculation tank through the split flow tee. The position of the splitter valve determines the flow path of the filtrate. When the liquid level in the recirculation tank is high enough to seat the splitter valve, all of the filtrate passes to the discharge/ clarification tank, otherwise, all or a portion of the returning filtrate returns to the recirculation tank.

Expected treatment level from the *LOWeFLOW* unit is 5 mg/l biological oxidation demand (BOD5), and 9 mg/l total suspended solids (TSS).

Effluent from the clarifier/discharge tank can be gravity feed, timed dosed, or demand dosed to the final dispersal.

Design Criteria

There are four segments to the *LOWeFLOW*™ Treatment unit design: filter sizing, number of *Coils*, tanks, and pump/control equipment. The standard residential *LOWeFLOW*™ unit (***LF-500***) is a 500 gpd kit with some field assembly required (for parts list see appendix C). For system design flows greater than 500 gpd see appendix "B".

Filter sizing:

A standard residential 500 gpd unit is sized based on 25 gpd/sq. ft. or 20 sq. ft. The media for the *LOWeFLOW*™ filter shall be *Growstone, LFGS-30*. The depth of the media required between the tubing and underdrain is 30". There is an additional 3" of media covering the drip tube and 3" deep layer of media for the underdrain. The over-all height of the *LOWeFLOW*™ filter is 36". Child proofing mesh, included in the standard packages, must be placed over the coils prior to final cover of media.

Drip Tubing Network Layout:

The tubing used in the *LOWeFLOW*™ treatment unit is custom Netafim Bioline™, 0.42 gph emitters, manufactured to *Lowridge's* specifications. Each residential *LOWeFLOW*™ unit is equipped with four (4) 100 foot laterals configured in a pre-assembled *Coil* containing 800 emitters, 40 emitters per sq. ft. For design flows of greater than 500 gpd see appendix B for details.

The *LOWeFLOW*™ unit is intended to be operated at a 4:1 recirculation ratio or greater. See appendix D for details on timer settings.

Tanks:

All tanks must be approved by Idaho Department of Environmental Quality as wastewater containment vessels. Minimum liquid volumes for a 500 gpd design flow are:

- Settling (septic) tank **1000 gallons** (see below)
- Recirculation tank **400 gallons** (see below)
- Clarification volume **250 gallon** (see below)

Septic tank: The minimum standard septic tank arrangement for a 4 bedroom house is a 1,000 gallon septic tank. For each additional bedroom add 250 gallons.

Recirculation tank: The recirculation tank shall have the capability of maintaining 2 times the design flow. The minimum size tank shall be 1,000 gallons. (See Figure 1.)

Clarifier: The *LOWeFLOW*™ system must incorporate at least 250 gallons of clarifying capacity for a 500 gpd design flow. For design flows above 500 gpd the clarification volume must be at least 50% of the design capacity. In a pump tank the clarification capacity is the minimum liquid in the discharge tank to submerge the discharge pump. Example: if the discharge pump is 22" tall, a standard 1,000 gallon pump tank has a volume of 20 g/inch. (Check with the tank manufacturer for exact figures). When the pump is submerged, there are 440 gallons of minimum volume in the tank. This volume is in excess of the 250 gallons needed for the clarification volume.

For systems that are gravity fed, the clarifier tank can be a small 250 gallon unit.

Emergency storage for the clarification/pump chamber is achieved in the recirculation tank through the control panel. When a high level condition occurs in the clarifier/discharge tank the recirculation pump is overridden off and no flow will progress from the recirc tank to the clarifier/discharge tank until the high level condition in the clarifier/discharge tank is correct.

Pumps/Control Equipment

The *LOWeFLOW*™ Treatment system incorporates a recirculating pump which has two functions: dose the *LOWeFLOW*™ filter and flush the *Coil* and disc filter.

The standard control panel used in most residential application is the ***LF2P-RF-OS*** which will accommodate the recirculation/flush pump, a discharge pump, and the *LOWeFLOW*™ headworks. A high level alarm in the discharge tank overrides off the recirculation pump. Emergency storage for pump failure is only needed in the recirculation tank.

Appendix A

Media:

LOWeFLOW

Growstone, LFGS-30. Two tote bags per each 500 gpd basin.

Appendix B:

Design flow greater than 500 gpd.

Design parameters:

Tanks, minimum liquid volumes:	
Settling tank	200% of design flow
Recirc. Tank	80% of design flow + emergency storage
Clarifier capacity	50% of design flow
Filter basin:	1-LFB-500 per each 500 gpd design flow
Coil	1-LF-500 per each 500 gpd design flow
Child proofing mesh	

For flows over 500 gpd additional *LOWeFLOW™ Coils* can be added in increments of 500 gpd. All system designs over 500 gpd are considered "custom" and will require some design assistance from *Lowridge Onsite Technologies*.

Appendix C:

Parts list for standard residential, 500 gpd kit:

- *LOWeFLOW™* basin & *Coil* (with child proofing mesh)
- Headworks: disc filter, solenoid valves, pressure gauges
- Splitter valve
- Splitter tee
- Recirculation pump: 1/2 hp, 30 gpm turbine pump
- *LF2P-RF-OS* Control panel
- Floats for recirculation and discharge pumps
- King fittings: allows piping network to drain
- 2 bags of LFGS-30 media

Appendix D:

Timer Settings for Recirculation:

The goal is to achieve a recirculation ratio of 4:1 of the average daily flow. The table below gives the timer settings for a variety of average daily flows. Note that the "ON" time is always **30 seconds**. The standard 500 gpd *Coil* has an estimated flow rate of 5.5 gpm. Actual flow may vary, slightly.

Ave. Daily Flow	Recirc. Flow rate	"ON" Time	"OFF" Time
100 gpd	400 gpd	30 seconds	9.5 min
150	600	"	6.0
200	800	"	4.5

250*	1000	“	3.5
300	1200	“	3.0
350	1400	“	2.5
400	1600	“	2.0
500	2000	30 seconds	1.5 min

*Factory default setting.

Appendix E: *LOWeFLOW* cover options.

There are a couple of different cover options in addition to the recommended child proof mess. One option is a small deck.

- The LFB-500 poly basin can be fitted with a wood or synthetic wood frame on the top lip. A protective deck can then be attached to the frame. The deck must have deck boards with 1/8” to 1/4” spacing for proper air ventilation. The deck is bolted to the frame with four bolts for future removal.
- The *LOWeFLOW* can be planted with small rooted plant like perry winkle. The roots need to have all the soil washed off and planted in the center of the coil.

November 8, 2017

Sampling instructions for Idaho DEQ provisional approval of the *LOWeFLOW* system. All costs associated with collecting and laboratory analysis of samples shall be Lowridge's responsibility to pay. Once Lowridge has achieved general approval for the *LOWeFLOW* system the requirement for testing CBOD and TSS will be eliminated unless there is a permit requirement for ongoing testing. In that case, the property owner will be charged thereafter.

Sampling of the *LOWeFLOW* system should be conducted by catching a falling stream of water from the "U" fitting inside the recirculation tank. To accomplish that, remove the splitter valve from the "U" fitting and temporarily install a 2" PVC pipe and tee to create a falling stream.

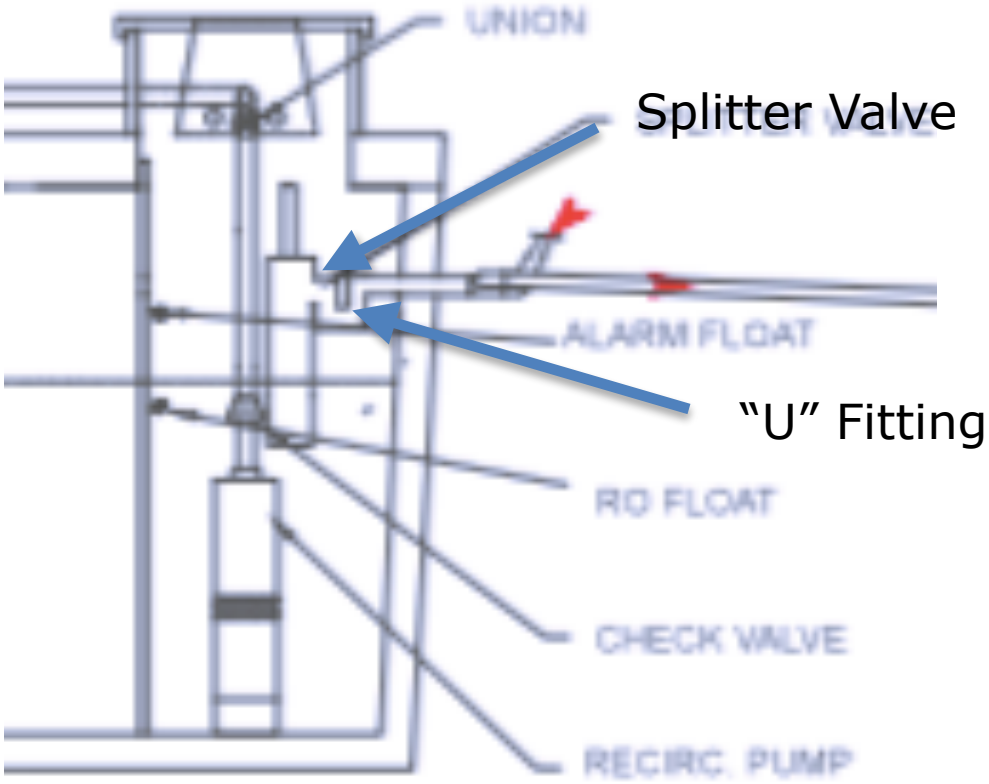

Recirculation Tank

PO Box 1179 Lake Stevens, WA 98258 O 877 476-8823 F (425) 335-3622 C (425) 750-4922 dave@lowridgetech.com

"U" Fitting

Splitter Valve

"U" Fitting

Temporary "Tee"

Falling Stream

Samples must be pulled by a third party qualified as a wastewater treatment system operator. Terry Tucker (208) 859-8826, 2 Rainbow Ridge, Garden Valley, ID 83622, has agreed to provide sampling services. Monitoring

samples provided to a laboratory will analytically quantify that the treatment system is operating in compliance if samples do not exceed:
a. 40 mg/l CBOD5 (Standard method SM 5210 B)
b. 45 mg/l TSS (Standard method SM 2540 D)

Each sample report must be accompanied with a chain of custody. Each sample will have a chain-of-custody form, identifying:
a. the sample's source (street address or installation permit number), date and time of collection, and the person's name who collected the sample.
b. Chain-of-custody form shall specify the laboratory analysis to be performed on the sample.
c. Sample storage and transport will take place in appropriate containers under appropriate temperature control.

Sampling procedure must be as follows:

1. Remove splitter valve from "U" fitting.
2. Place temporary "Tee" on "U" fitting.
3. Let one recirculation dose cycle prior to collecting sample.
4. Collect sample on second dose cycle after temporary tee was installed.
5. After sample is collected, remove temporary "Tee" and replace Splitter valve.

The timer settings for the recirculation pump are factory set for 3:30 (minutes: seconds) off and 30 seconds on. Timer settings are not to be changed for sampling. Samples are to be pulled from the normal timer dosing sequence. Always let one dose cycle pass before pulling the first sample.

Samples are to be delivered to laboratory within prescribed time frames as outlined in standard methods. Analysis to be conducted for carbonacious/ biological oxidation demand five day test (CBOD5) and total suspended solids (TSS).

Sample results and chain of custodies are to sent to:

Dave Lowe
dave@lowridgetech.com
or
Lowridge Onsite Technologies, LLC
PO Box 1179
Lake Stevens, WA 98258

Dave Lowe will forward copies of the laboratory results to Idaho DEQ and to the local health districts with the annual reports.

Procedure to correct failing effluent samples:

If sample quality comes back failing, a determination must be made as to why the treatment is not being met. Several simple items to verify are:

1. Recirculation ratio. Must be at least 4:1 or more
2. Proper backflushing of disc filter and forward flushing of *LOWeFLOW* coils. Proper backflushing is evident when pressures on gauges 1 & 2 are the same (about 50 psi) and gauge 3 indicates a pressure of 40 to 42 psi.
3. Excess accumulation of solids in the recirc and/or septic tank.
4. Bottom float switch in the recirc tank set too high causing the pump to stop cycling.

Depending on what the deficiency, a correcting action should be initiated within a week of discovering a bad sample. After a correction is made, sampling should commence in 2-3 weeks. One sample per month should be pulled until 1 consecutive samples meet standards.

Maintenance records should include, at a minimum, the following and steps outlined in the *LOWeFLOW* O&M manual.

From the Idaho TGM, number 5.

Records for each O&M visit shall be kept and should include the following information for the primary maintenance visit:
a. Date and time.
b. Observation for objectionable odors.
c. Observation for surfacing of effluent from the system or drainfield.
d. Notation as to whether the system was pumped since the last O&M visit including the portions of the system pumped, pumping date, and volume.

e. Sludge depth and scum layer thickness in the system's tanks and/or treatment unit.
f. If responding to an alarm event, provide the cause of the alarm and any maintenance necessary to address the alarm situation.
g. Field testing results for any system effluent quality indicators as recommended in the *LOWeFLOW* O&M manual.
h. Record of any cleaning and lubrication.
i. Notation of any adjustments to control settings or equipment.
j. Test results for pumps, switches, alarms, and blowers.
k. Notation of any equipment or component failures.
l. Equipment or component replacement including the reason for replacement.
Recommendations for future service or maintenance and the reason for the recommendations.
n. Any maintenance occurring after the primary maintenance visit should only record and address the reason for the visit and the associated activities that occur.

Include annual reporting requirements: The annual reporting period is from July 1 of the preceding year through June 30 of the reporting year.
Annual report for each property owner shall include these items:
a. A copy of the maintenance records for the reporting period as required under TGM Section 1.9.1 Managed Operation and Maintenance.
b. A copy of all laboratory records for effluent sampling as described in TGM Section 1.9.2 Managed Monitoring.
c. A copy of each chain-of-custody form associated with each effluent sample as described in TGM Section 1.9.2 Managed Monitoring.

The annual report shall be submitted to the local health district by the property owner, or service provider on behalf of the property owner no later than July 31 of each year for the preceding 12-month period.
The annual report shall be submitted to the local health district that issued the subsurface sewage disposal permit for the treatment system.

LOWRIDGE ON SITE TECHNOLOGIES, LLC.

January 29, 2018

To:
James Craft
Idaho DEQ

Re: Potential approval of the *OACAR* system in Idaho.

Hi James,

At the last TGC meeting I attended I suggested to postpone the review of the *OSCAR* until I had a chance to review the TGM and compile a summary of how the *OSCAR* design criteria compared to the Idaho mound system criteria.

I have summarized the criteria in the TGM, sections 4.24.2, 4.24.3, 4.24.3.2, and 4.24.3.3 on one side of a table and compared that to the corresponding criteria for the *OSCAR* on the opposite side. This format should make it easy for the TGC members to see the areas where there is no conflict with the mound criteria and then where the discussion needs to go.

I also mentioned an NSF standard 40 test we were conducting. It has been completed, yet we are still waiting for the final report. This may delay approval of the *OSCAR* application.

Section 4.24.2

Mound	**Oscar**
Sand depth 12" 2-3 ' soil 24" 1' soil	6" 12" soil
Application rate, most restrictive layer	Same
Max slope same	Same
Exclusions same	Same
Minimum pre treatment STE	Same
Max daily flow 1500 gpd	Same
Multiple cells	Same
Design flow rate 1.5 times	Same
Effluent distribution PD	Drip tubing

Section 4.24.3

PO Box 1179 Lake Stevens, WA 98258 O 877 476-8823 F (425) 335-3622 C (425) 750-4922 dave@lowridgetech.com

Absorption bed Fill Soil cap	Coil layout Fill Sand cover

Section 4.24.3.1
Bed Cell Design

Only absorption beds Max bed footage 2250 sq. ft. Max bed width 10 ft.	Coils Same two rows of 5' coil or 1 row of 7' coils
Cell separation 10 ft.	Same
Absorption placed end to end	Same
Hydraulic loading rate 1.0 g/ft2/day	2.0 g/ft2/day
Bed hight 9"	tubing hight 1/2"
Geo textile bed cover	none
Observation ports	Same
No sizing reductions	Same
Pressure distribution	Drip tubing
Orifice place	Drip tubing

Section 4.24.3.2
Medium Sand Fill

Medium sand	Same
Minimum depth 12"	6"
24" shoulder	6" shoulder
Flat site A= (B+D+2(H))	entire foot print
Sloped site A= (B+D+H)	entire foot print
Side slopes 3:1	1:1 slope
Long & narrow as possible G<F	Same
Slope correction factors	Same

Section 4.24.3.3
Soil Cap

12” cover soil	Only Sand
18” cap	Only Sand
Prevent physical damage	Same
Run-off considerations	Same

Thanks,

Dave Lowe

PO Box 1179 Lake Stevens, WA 98258 O 877 476-8823 F (425) 335-3622 C (425) 750-4922 dave@lowridgetech.com

Appendix D

Eljen Corporation – A42 Gravelless Sand Filter Installation Manual

Innovative Environmental Products and Solutions Since 1970

January 12, 2018

James Craft
DEQ State Office
Water Quality Division
1410 N. Hilton
Boise, ID 83706
(208) 373-0144
james.craft@deq.idaho.gov

Mr. Craft,

Please find enclosed a submission for the approval of Eljen A42 Geotextile Sand Filter (GSF) for use as a treatment and dispersal system for onsite sewage in the State of Idaho.

Eljen requests that the GSF is approved as a provisional system in Idaho and installed per manufactures recommendations for all configurations permissible within the Idaho IDAPA.58.01.03.009.01: Individual/Subsurface Sewage Disposal Rules.

Accompanying this request is a packet that contains the documentation for Approval as specified in the Idaho Technical Guidance Manual (TGM), and other supporting documentation outlined in section 1.4 of the TGM. If you have any questions, please do not hesitate to contact me at 1-800-444-1359.

Respectfully,

Scott Moore
Technical Specialist
Eljen Corporation
125 McKee Street
East Hartford, CT 06108

Support Documentation for Approval as Outlined in the TGM

1. Detailed construction drawings
    - Please find the construction drawings in our attached manual, Idaho Design and Installation Manual, January 2018. This manual has been updated to include information from previous conversations.

2. Capacities (i.e., volume and/or flow)
    - Actual total volume of a A42 Module 48in x 24in x 7in ÷ 1728 cu. in. = 4.67 cu. ft.
    - A42 Void Space is 95%
    - Storage Capacity of Unit alone: 4.67 cu. ft. x 95% = 4.43 cu. ft.
    - 1 cubic foot = 7.48051948 US gallons
    - Gallons per Module: 4.43 cu. ft. x 7.48 US Gallons / cu. ft. = 33.16 Gallons Per Module

    - Loading capacity is 3 gallons per dose per A42 unit in pressure and pump to gravity dosing
    - Total load per unit per day is 25 gallons per module per day
    - The dose volume is 12% of the total daily design load

3. Structural calculations
    - All structural information is contained in the attached Idaho Design and Installation Manual, January 2018.

4. List of product materials is confidential and can be found in the supplementary supporting documents attachment. (removed from public viewing)

5. Evidence of stability and durability
    - Attached H10 testing results (removed from public viewing)
    - Attached NSF40 test results (removed from public viewing)
    - Pressure Distribution Review letter from NSF

6. Manufacturer's installation requirements
    - Idaho Design and Install Manual, January 2018.

7. Operation and maintenance instructions: Please see the attached homeowners manual.
    - Eljen Septic System Homeowners Manual

Support Documentation for Sections 1, 3 and 6.

Geotextile Sand Filter

Idaho

Design and Installation Manual

January 2018

125 McKee Street
East Hartford, CT 06108
Tel: 800-444-1359
Fax: 860-610-0427
www.eljen.com

Table of Contents

SUBJECT PAGE

SUPPORT DOCUMENTATION FOR APPROVAL AS OUTLINED IN THE TGM 2
GLOSSARY OF TERMS 3
GSF SYSTEM DESCRIPTION 4
1.0 DESIGN AND INSTALLATION 5
2.0 TRENCH INSTALLATION SIZING AND GUIDELINES 8
3.0 BED INSTALLATION SIZING AND GUIDELINES 11
4.0 MOUND INSTALLATION GUIDELINES 14
5.0 DOSING DISTRIBUTION GUIDANCE 15
6.0 PRESSURE DISTRIBUTION GUIDANCE 15
7.0 SYSTEM VENTILATION 16
8.0 GSF INSPECTION CHECK LIST 18

GSF DRAWINGS AND TABLES

DRAWINGS

FIGURE 1: GSF SYSTEM OPERATION 4
FIGURE 2: TYPICAL A42 GSF 3 FOOT TRENCH CROSS SECTION 5
FIGURE 3: TRENCH CROSS SECTION 7
FIGURE 4: PLAN VIEW –TRENCH SYSTEM 9
FIGURE 5: SECTION VIEW – TRENCH SYSTEM – LEVEL SITE 9
FIGURE 6: SECTION VIEW – TRENCH SYSTEM – SLOPING SITE 9
FIGURE 7: PLAN VIEW – BED SYSTEM 12
FIGURE 8: SECTION VIEW – BED SYSTEM 12
FIGURE 9: PRESSURE PIPE PLACEMENT 15
FIGURE 10: PRESSURE CLEAN OUT 16
FIGURE 11: CONTOURED TRENCH PRESSURE DISTRIBUTION 16
FIGURE 12: VENT LAYOUTS FOR GRAVITY AND LOW PRESSURE SYSTEMS 17
FIGURE 13: GSF WITH 4” VENT EXTENDED TO CONVENIENT LOCATION 17

TABLES

TABLE 1: SPECIFIED SAND SIEVE REQUIREMENTS 3
TABLE 2: VERTICAL SEPARATION 6
TABLE 3: APPLICATION RATES 7
TABLE 4: SQUARE FOOTAGE PER A42 PER TRENCH APPLICATION 7

Glossary of Terms

A42 Module 48” x 24” x 7” (L x W x H)

Cover Fabric The geotextile cover fabric (provided by manufacturer) that is placed over the GSF modules.

Design Flow The estimated peak flow that is used to size a GSF system for a 3-bedroom single family dwelling or mobile home is 250 gallons per day +/- 50 gallons/Bedroom.

GSF The Eljen Geotextile Sand Filter Modules and the 12-inch sand layer at the base and 6 inches along the sides of the modules.

GSF Module The individual module of a GSF system. The module is comprised of a cuspated plastic core and corrugated geotextile fabric.

Specified Sand To ensure proper system operation, the system MUST be installed using ASTM C33 Sand.

ASTM C33 sand will have less than 10% passing the #100 Sieve and less than 2% passing the # 200 sieve. Ask your material supplier for a sieve analysis to verify that your material meets the required specifications.

TABLE 1: SPECIFIED SAND SIEVE REQUIREMENTS

ASTM C33 SAND SPECIFICATION		
Sieve Size	Sieve Square Opening Size	Specification Percent Passing (Wet Sieve)
3/8 inch	9.52 mm	100
No. 4	4.76 mm	95 - 100
No. 8	2.38 mm	80 - 100
No. 16	1.19 mm	50 - 85
No. 30	590 µm	25 - 60
No. 50	297 µm	10 - 30
No. 100	149 µm	2 - 10
No. 200	75 µm	< 2

Primary Treatment Zone

- Perforated pipe is centered above the GSF module to distribute septic effluent over and into corrugations created by the cuspated core of the geotextile module.
- Septic effluent is filtered through the Bio-Matt fabric. The module's unique design provides increased surface area for biological treatment that greatly exceeds the module's footprint.
- Open air channels within the module support aerobic bacterial growth on the modules geotextile fabric interface, surpassing the surface area required for traditional absorption systems.
- An anti-siltation geotextile fabric covers the top and sides of the GSF module and protects the Specified Sand and soil from clogging, while maintaining effluent storage within the module.

Secondary Treatment Zone

- Effluent drips into the Specified Sand layer and supports unsaturated flow into the native soil. This Specified Sand/soil interface maintains soil structure, thereby maximizing the available absorption interface in the native soil. The Specified Sand supports nitrification of the effluent, which reduces oxygen demand in the soil, thus minimizing soil clogging from anaerobic bacteria.
- The Specified Sand layer also protects the soil from compaction and helps maintain cracks and crevices in the soil. This preserves the soil's natural infiltration capacity, which is especially important in finer textured soils, where these large channels are critical for long-term performance.
- Native soil provides final filtration and allows for groundwater recharge.

FIGURE 1: GSF SYSTEM OPERATION

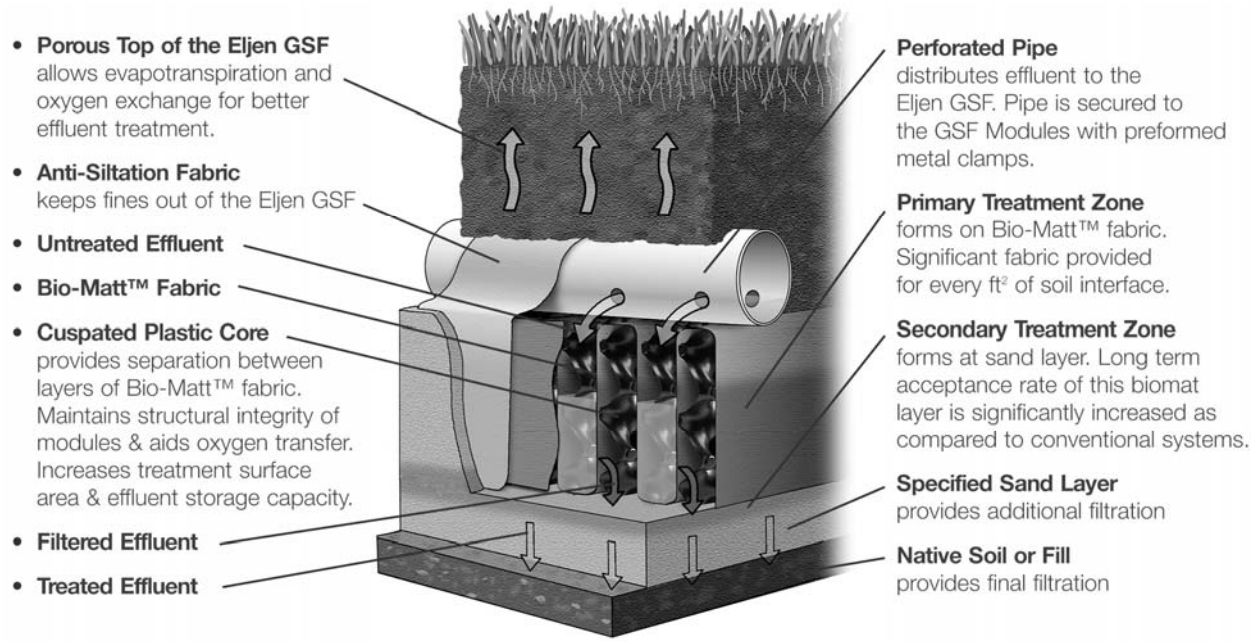

FIGURE 2: TYPICAL A42 GSF 3 FOOT TRENCH CROSS SECTION

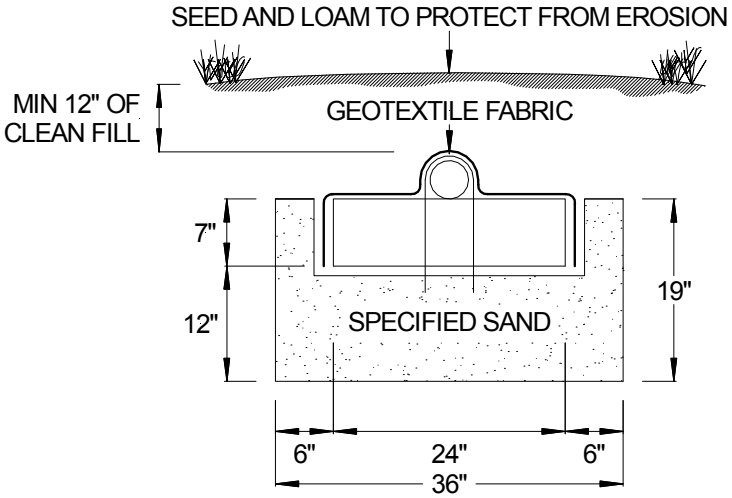

A42 MODULE (L x W x H) 48" x 24" x 7"

<u>All systems are required to have a minimum of:</u>

- 6 inches of Specified Sand is at the edges of the GSF module.
- 6 inches of Specified Sand is at the beginning and end of each GSF Row.
- 12 inches of Specified Sand is directly below the GSF module.
- Minimum 12 inches of cover above the pipe.

1.0 Design and Installation

1.1 REQUIREMENTS: GSF systems must meet the local rules and regulations except as outlined in this manual. The Idaho Regulations IDAPA.58.01.03.009.02 and the local regulations will be referred to as the *guidelines*.

The sizing charts apply to residential systems only and are found in section 1.15. Please contact Eljen's Technical Resource Department at 1-800-444-1359 for design information on commercial systems.

1.2 SPECIFIED SAND SPECIFICATION FOR GSF SYSTEMS: The sand immediately under, between rows and around the perimeter of the GSF system must meet ***ASTM C33 SPECIFICATIONS, WITH 2-10% PASSING A #100 SIEVE AND LESS THAN 2% PASSING A #200 SIEVE.*** Please place a prominent note to this effect on each design drawing. See Table 1 for more information on the sand and sieve specifications.

1.3 CONNECTIONS AND FITTINGS: Connections of lines to tanks and distribution boxes must be made using watertight mechanical seals. Use of any grouting material is not permitted.

1.4 PLACING GSF MODULES: The "Painted Stripe" on the GSF modules indicates the top of the module and is not intended to indicate the location of the distribution pipe. With the painted stripe facing up, all rows of GSF modules are set level, end to end on the Specified Sand layer. No mechanical connection is required between modules.

1.5 DISTRIBUTION: Gravity, pump to gravity or pressure distribution are acceptable when using the GSF System. All piping must meet the guidelines. A pressure manifold is placed inside the distribution pipe when using pressure distribution. Section 6.0 of this manual goes into details of how to construct the distribution network. All piping must meet state and local regulations.

1.6 COVER FABRIC: Geotextile cover fabric is provided by Eljen Corporation for all GSF systems. It is placed over the top and sides of the module rows to prevent long term siltation and failure. **Cover fabric substitution is not allowed.** Fabric should drape vertically over the pipe and must *not* block holes in the distribution pipe or be stretched from the top of the pipe to the outside edge of the modules. "Tenting" will cause undue stress on fabric and pipe.

1.7 BACKFILL & FINISH GRADING: Complete backfill with a minimum of 12 inches of clean porous fill measured from the top of the pipe. Backfill exceeding 18 inches requires venting at the far end of the trench. Use well graded native soil fill that is clean, porous and devoid of large rocks. Do not use wheeled equipment over the system. A light track machine may be used with caution, avoiding crushing or shifting of pipe assembly. Divert surface runoff from the Effluent Disposal Area, (EDA). Finish grade to prevent surface ponding. Topsoil and seed system area to protect from erosion.

1.8 ADDITIONAL FACTORS EFFECTING RESIDENTIAL SYSTEM SIZE: Homes with expected higher than normal water usage may consider increasing the septic tank volume as well as incorporating a multiple compartment septic tank. Consideration for disposal area may be up-sized for expected higher than normal water use.

For example:

- Luxury homes, homes with a Jacuzzi style tubs, and other high use fixtures.
- Homes with known higher than normal occupancy.

1.9 GARBAGE DISPOSALS: The use of a garbage disposal is not recommended as they can cause septic system problems by generating an increase of suspended solids, grease and nutrients.

However, if such units are proposed to be used, other measures should be taken to mitigate the increased nutrients to the field. Consult your local and state code for garbage disposal requirements. Eljen recommends a dual compartment tank or tanks in series. Consider upsizing the field for the additional biological load.

NOTE: Eljen requires the use of septic tank outlet effluent filters on all systems. Filters with higher filtration are recommended for systems with garbage disposals.

1.10 SEPTIC TANKS: Dual compartment tanks are recommended for all systems. Eljen supports this practice as it helps to promote long system life by reducing TSS and BOD to the effluent disposal area. Effluent filters are also required.

1.11 SEPTIC TANK FILTERS: Septic tank effluent filters are ***REQUIRED*** on the outlet end of septic tank. Filter manufactures require that filters be cleaned from time to time. Ask your installer or designer for specific cleaning requirements based on the type or make of the filter installed. Eljen requires the septic tank to be pumped every three years or as needed which would be a good time to check and conduct filter maintenance.

1.12 SYSTEM VENTING: It is strongly recommended to vent all systems that are over 18" below finished grade and systems beneath any surface condition that would not allow for surface air exchange with the system such as patios. See Section 7.0 for a more detailed explanation of venting GSF products.

1.13 VERTICAL SEPARATION TO LIMITING LAYER:

TABLE 2: VERTICAL SEPARATION

Idaho TGM Table 4.19 Recirculating gravel filter vertical separation to limiting layers (feet). Limiting Layer	Flow < 2,500 GPD All Soil Types	Flow ≥ 2,500 GPD All Soil Types
Impermeable layer	2	4
Fractured rock or very porous layer	1	2
Normal high ground water	1	2
Seasonal high ground water	1	2

1.14 NUMBER OF GSF MODULES REQUIRED: Residential systems use a minimum of six (6) modules per bedroom. See Section 1.15 for more information on systems sizing.

1.15 APPLICATION RATES FOR GSF SYSTEMS:

TABLE 3: APPLICATION RATES

Soil Group	Soil Subgroup	Soil Texture Classification	USDA Field Test Textural Classification	Application rate	Minimum Units Per Bedroom
A	A1	Medium Sand	30-60 Mesh	1.7	6
	A2a	Loamy Coarse	Poorly Graded	1.2	
	A2b	Fine Sand	Sand 60-140 Mesh	1	
		Loamy Sand	Sand		
B	B1	Very Fine Sand	Sand 140-270 Mesh	0.8	9
		Sandy Loam	Sandy Loam		
		Very Fine Sandy Loam	Sandy Loam		
	B2	Loam	Loam	0.6	
		Silt Loam	Silt Loam		
		Sandy Clay Loam	(≤27% Clay)		
C	C1	Silt	Silt Loam	0.4	12
		Sandy Clay Loam	Clay Loam (≤27% Clay)		
		Silty Clay Loam	Clay Loam		
	C2	Clay Loam	Clay Loam	0.3	

1. Per IDAPA 58.01.03.008.04, the bottom of the System Sand excavation must be installed level.
2. Systems with percolation rates in excess of 120 MPI are not allowed.
3. Drainfields larger than 1,500 ft^2 trench area bottom are prohibited from being constructed as standard (gravity)
4. Per IDAPA 58.01.03.008.04, a "Trench" is up to 6' wide, anything wider is considered a bed.
5. Maximum site slope per IDAPA 58.01.03 rules.

1.16 TRENCH SQUARE FOOTAGE BY TRENCH WIDTH:

TABLE 4: SQUARE FOOTAGE PER A42 PER TRENCH APPLICATION

TRENCH WIDTH	SAND EXTENSION	SQUARE FOOT PER MODULE
3 FOOT	6 INCHES	12
4 FOOT	12 INCHES	16
5 FOOT	18 INCHES	20
6 FOOT	24 INCHES	24

FIGURE 3: TRENCH CROSS SECTION

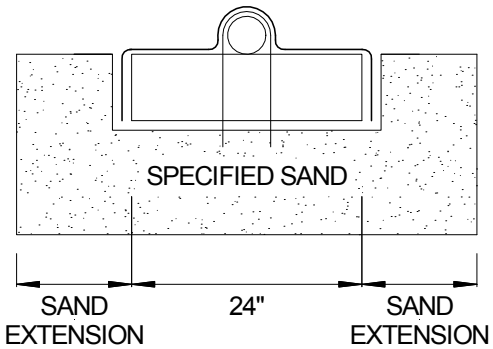

Trench Example:

House size:	3 Bedrooms
Design Flow:	250 gpd
Soil Type:	Soil B2; Silt Loam (0.6 gpd/sf)
Absorption Field Type:	Trench

Calculate Minimum Absorption Area

Lookup loading rate from Table 3 and determine the loading rate:

B	B1	Very Fine Sand	Sand 140-270 Mesh	16 - 30	0.8	9
		Sandy Loam	Sandy Loam			
		Very Fine Sandy Loam	Sandy Loam			
	B2	Loamy	Loam	31 - 60	0.6	
		Silt Loam	Silt Loam			
		Sandy Clay Loam	(≤27% Clay)			

Absorption Area: Design Flow ÷ Loading Rate

250 gpd ÷ 0.6 gpd / ft^2 = 416.66 ft^2

Calculate Number of Modules Required

TRENCH WIDTH	SAND EXTENSION	SQUARE FOOT PER MODULE
3 FOOT	6 INCHES	12
4 FOOT	12 INCHES	16
5 FOOT	18 INCHES	20
6 FOOT	24 INCHES	24

Number of units required = Absorption Area ÷ Square Foot Per Module

Units required

417 ft^2 ÷ 12 ft^2 / module = 34.7 Modules

Round to: 35 Modules

Calculate Minimum Trench Length

35 Units x 4 + 1 141 linear feet

Trench Width

Trench width = unit width + sand extension

36 = 24" + 12" (6" sand both sides of unit) 3 ft.

Final Dimension Layout

(Note: System layout and number of rows will vary based on site constraints)

Min. Product Length	140 ft.
(note: 6 inches of sand required at each end of trench which makes the minimum trench length 141 ft.	
Trench Width	3 ft.
Minimum Number of Units	35 Modules
2 Trench Rows	18 Modules each row, 73 ft. per row.
Min. System Area	420 ft^2

FIGURE 4: PLAN VIEW –TRENCH SYSTEM

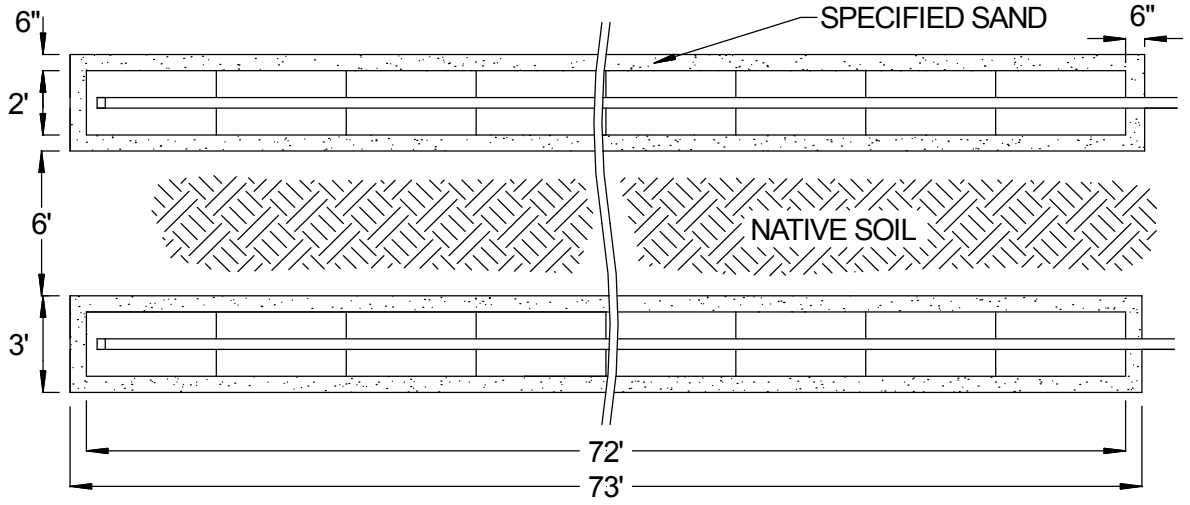

FIGURE 5: SECTION VIEW – TRENCH SYSTEM – LEVEL SITE

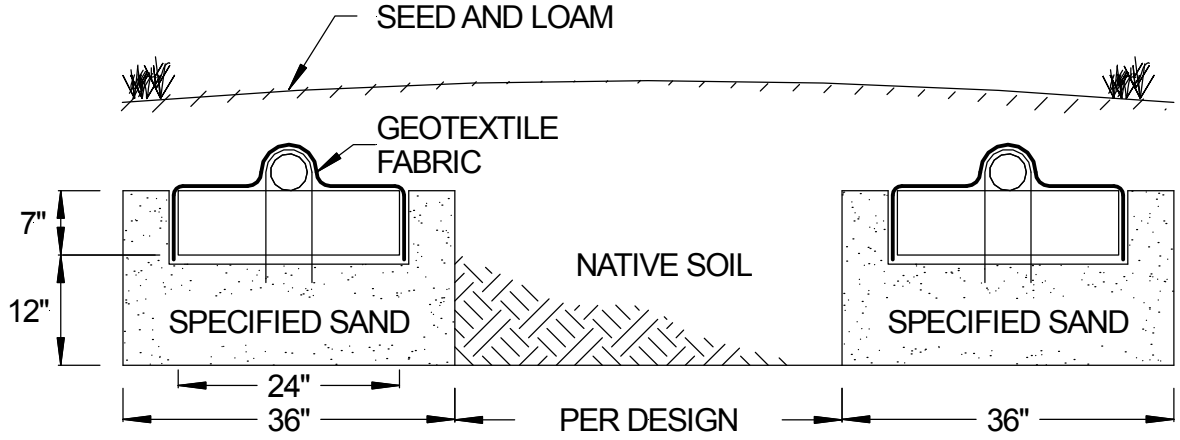

FIGURE 6: SECTION VIEW – TRENCH SYSTEM – SLOPING SITE

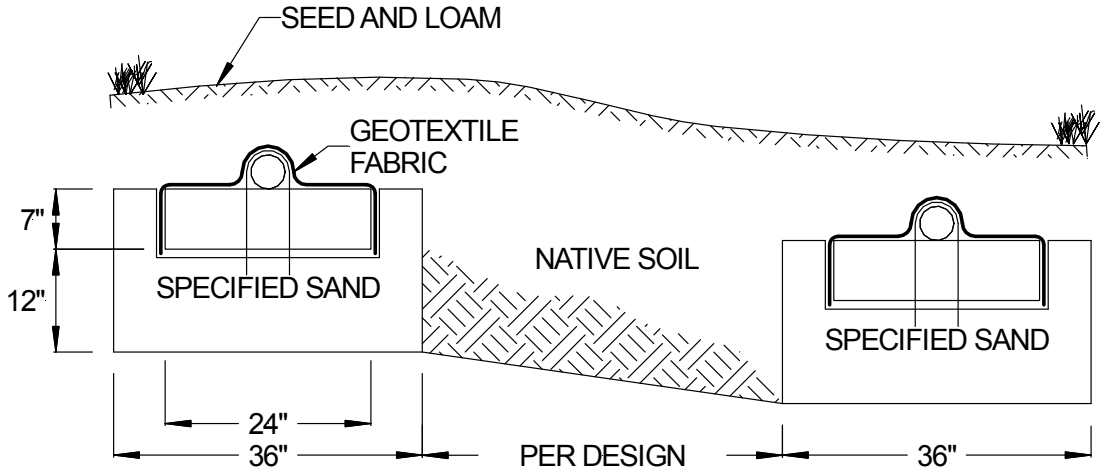

2.0 Trench Installation Sizing and Guidelines

1. Ensure all components leading to the GSF system are installed properly. Septic tank effluent filters are required with the GSF system.

2. Determine the number of GSF Modules required using the trench sizing example.

3. Prepare the site. Do not install a system on saturated ground or wet soils that are smeared during excavation. Keep machinery off infiltrative areas.

4. Plan all drainage requirements above (up-slope) of the system. Set soil grades to ensure that storm water drainage and ground water is diverted away from the absorption area once the system is complete.

5. Excavate the trench; scarify the receiving layer to maximize the interface between the native soil and specified sand.

6. Minimize walking in the trench prior to placement of the specified sand to avoid soil compaction.

7. Place specified sand in 2, 6" lifts and stabilize by foot, a hand held tamping tool or a portable vibrating compactor. The minimum stabilized height below the GSF module must be level at 12".

8. Place GSF modules with **PAINTED STRIPE FACING UP**, end to end on top of the specified sand along their 4-foot length.

9. A standard 4-inch perforated pipe, SDR 35 or equivalent, is centered along the modules 4-foot length. Orifices are set at the 4 & 8 o'clock position.

10. All 4-inch pipes are secured with manufacturers supplied wire clamps, one per module.

11. (Pressure Distribution Systems) Insert a pressure pipe (size per design and code) into the standard 4-inch perforated pipe. The pressure pipe orifices are set at the 12 o'clock position as shown in Figure 9. Each pressure lateral will have a drain hole at the 6 o'clock position. Each pressure lateral shall include sweeping cleanouts at the terminal ends and be accessible from grade.

12. ***Cover fabric substitution is not allowed.*** The installer should lay the Eljen provided geotextile cover fabric lengthwise down the trench, with the fabric fitted to the perforated pipe on top of the GSF modules. Fabric should be neither too loose, nor too tight. The correct tension of the cover fabric is set by:
    a. Spreading the cover fabric over the top of the module and down both sides of the module with the cover fabric tented over the top of the perforated distribution pipe.
    b. Place shovelfuls of Specified Sand directly over the pipe area allowing the cover fabric to form a mostly vertical orientation along the sides of the pipe. Repeat this step moving down the pipe.

13. Place the sand extensions along both sides of the modules edge. A minimum of 6 inches of Specified Sand is placed at the beginning and end of each trench.

14. Complete backfill with a minimum of 12 inches of clean porous fill measured from the top of the pipe. Backfill exceeding 18 inches requires venting at the far end of the trench. Use well graded native soil fill that is clean, porous and devoid of large rocks. Do not use wheeled equipment over the system. A light track machine may be used with caution, avoiding crushing or shifting of pipe assembly.

15. Divert surface runoff from the system. Finish grade to prevent surface ponding. Topsoil and seed system area to protect from erosion.

Bed Example:

House size:	3 Bedrooms
Design Flow:	250 gpd
Soil Type:	Silt Loam (0.6 gpd/sf)
Absorption Field Type:	Bed

Calculate Minimum Absorption Area

Lookup loading rate from Table 3:

B	B1	Very Fine Sand	Sand 140-270 Mesh	16 - 30	0.8	9
		Sandy Loam	Sandy Loam			
		Very Fine Sandy Loam	Sandy Loam			
	B2	Loamy	Loam	31 - 60	0.6	
		Silt Loam	Silt Loam			
		Sandy Clay Loam	(≤27% Clay)			

Absorption Area: Design Flow ÷ Loading Rate x 0.75

250 gpd ÷ 0.6 gpd = 416 ft^2

Calculate Number of Modules Required

Lookup units required per bedroom from Table 3:

B	B1	Very Fine Sand	Sand 140-270 Mesh	16 - 30	0.8	9
		Sandy Loam	Sandy Loam			
		Very Fine Sandy Loam	Sandy Loam			
	B2	Loamy	Loam	31 - 60	0.6	
		Silt Loam	Silt Loam			
		Sandy Clay Loam	(≤27% Clay)			

Units Required: Number of Bedrooms x Units Required per Bedroom

3 x 19 = 27 Units

Calculate Minimum Bed Length

Maintain a minimum of 2 rows in a bed system. (2 Rows for this example)

27 Units ÷ 2 Rows = 13.5 Mods/Row

Round up 14 Mods/Row

Calculate Minimum Row Length

14 Units x 4 ft./unit = 56 ft. + 6" sand each end = 57 ft. per Row

Bed Width

Bed Width = Absorption Area ÷ Bed Length

2 Rows

416 ft^2 ÷ 57 ft. = 7.29 ft., round to 8 ft.

Determine Lateral Spacing

Lateral to Lateral Spacing = Bed Width ÷ Number of Rows

2 Rows

8 ft. ÷ 2 rows 4 ft.

Lateral to Edge Spacing = Lateral to Lateral Spacing ÷ 2

4 ft. ÷ 2 2 ft.

Final Dimension Layout
(Note: System layout and number of rows will vary based on site constraints)

Bed Length	57 ft.
Bed Width	8 ft.
Minimum Number of Units	28 Units
Units per Row	14 units per row
Lateral to Lateral Spacing	4 ft.
Lateral to Edge Spacing	2 ft.
System Area	456 ft^2

FIGURE 7: PLAN VIEW – BED SYSTEM

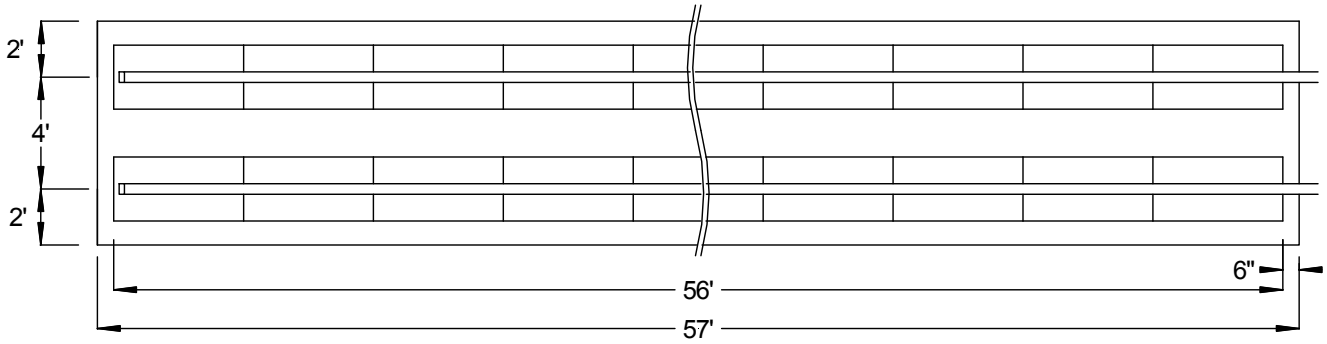

FIGURE 8: SECTION VIEW – BED SYSTEM

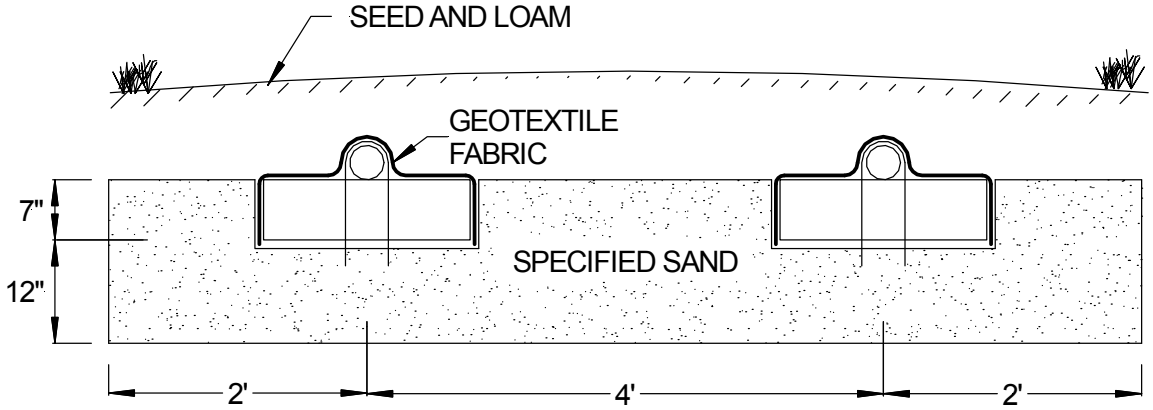

3.0 Bed Installation Sizing and Guidelines

1. Ensure all components leading to the GSF system are installed properly. Septic tank effluent filters are required with the GSF system.

2. Determine the number of GSF Modules required using the bed sizing example.

3. Prepare the site. Do not install a system on saturated ground or wet soils that are smeared during excavation. Keep machinery off infiltrative areas.

4. Plan all drainage requirements above (up-slope) of the system. Set soil grades to ensure that storm water drainage and ground water is diverted away from the absorption area once the system is complete.

5. Excavate the bed absorption area; scarify the receiving layer to maximize the interface between the native soil and specified sand.

6. Minimize walking in the absorption area prior to placement of the specified sand to avoid soil compaction.

7. Place specified sand in 2, 6" lifts, stabilize by foot, a hand held tamping tool or a portable vibrating compactor. The minimum stabilized height below the GSF module must be level at 12".

8. Place GSF modules with **PAINTED STRIPE FACING UP**, end to end on top of the specified sand along their 4-foot length.

9. A standard 4-inch perforated pipe, SDR 35 or equivalent, is centered along the modules 4-foot length. Orifices are set at the 4 & 8 o'clock position.

10. All 4-inch pipes are secured with manufacturers supplied wire clamps, one per module.

11. (Pressure Distribution Systems) Insert a pressure pipe (size per design and code) into the standard 4-inch perforated pipe. The pressure pipe orifices are set at the 12 o'clock position as shown in Figure 9. Each pressure lateral will have a drain hole at the 6 o'clock position. Each pressure lateral shall include sweeping cleanouts at the terminal ends and be accessible from grade.

12. ***Cover fabric substitution is not allowed.*** The installer should lay the Eljen provided geotextile cover fabric lengthwise down the row, with the fabric fitted to the perforated pipe on top of the GSF modules. Fabric should be neither too loose, nor too tight. The correct tension of the cover fabric is set by:
    a. Spreading the cover fabric over the top of the module and down both sides of the module with the cover fabric tented over the top of the perforated distribution pipe.
    b. Place shovelfuls of Specified Sand directly over the pipe area allowing the cover fabric to form a mostly vertical orientation along the sides of the pipe. Repeat this step moving down the pipe.

13. Place 6 inches of Specified Sand along both sides of the modules edge. A minimum of 6 inches of Specified Sand is placed at the beginning and end of each module row. A minimum of 12 inches of Specified Sand is placed in between module rows.

14. Complete backfill with a minimum of 12 inches of clean porous fill measured from the top of the pipe. Backfill exceeding 18 inches requires venting at the far end of the bed. Use well graded native soil fill that is clean, porous and devoid of large rocks. Do not use wheeled equipment over the system. A light track machine may be used with caution, avoiding crushing or shifting of pipe assembly.

15. Divert surface runoff from the system. Finish grade to prevent surface ponding. Topsoil and seed system area to protect from erosion.

4.0 Mound Installation Guidelines

1. Ensure all components leading to the GSF system are installed properly. Septic tank effluent filters are required with the GSF system.

2. Determine the number of GSF Modules required using the sizing formula.

3. Prepare the site. Do not install a system on saturated ground or wet soils that are smeared during preparation. Keep machinery off infiltrative areas.

4. Plan all drainage requirements above (up-slope) of the system. Set soil grades to ensure that storm water drainage and ground water is diverted away from the absorption area once the system is complete.

5. Remove the organic soil layer. Scarify the receiving layer to maximize the interface between the native soil and Specified Sand. Minimize walking in the absorption area prior to placement of the Specified Sand to avoid soil compaction.

6. Place fill material meeting local requirements (or Specified Sand requirements) onto the soil interface as you move down the excavated area. Place specified sand in a 6" lift, stabilize by foot, a hand held tamping tool or a portable vibrating compactor. The stabilized height below the GSF module must shall meet the mound design requirements.

7. Place GSF modules with **PAINTED STRIPE FACING UP**, end to end on top of the specified sand along their 4-foot length.

8. A standard perforated 4-inch distribution pipe is centered along the modules 4-inch length. Orifices are set at the 4 & 8 o'clock position.

9. All distribution pipes are secured with manufacturers supplied wire clamps, one per module.

10. (Pressure Distribution Systems) Insert a PVC Sch. 40 pressure pipe (size per design and code) into the standard perforated distribution pipe. The pressure pipe orifices are set at the 12 o'clock position as shown in Figure 9. Each pressure lateral will have a drain hole at the 6 o'clock position. Each pressure lateral shall include sweeping cleanouts at the terminal ends and be accessible from grade.

    It is strongly recommended to install a 4-inch vent onto the distribution pipe. Distribution pipes can be connected to one vent or use one vent per distribution line.

11. ***Cover fabric substitution is not allowed.*** The installer should lay the Eljen provided geotextile cover fabric lengthwise down the row, with the fabric fitted to the perforated pipe on top of the GSF modules. Fabric should be neither too loose, nor too tight. The correct tension of the cover fabric is set by:
    a. Spreading the cover fabric over the top of the module and down both sides of the module with the cover fabric tented over the top of the perforated distribution pipe.
    b. Place shovelfuls of Specified Sand directly over the pipe area allowing the cover fabric to form a mostly vertical orientation along the sides of the pipe. Repeat this step moving down the pipe.

12. Ensure there is 6 inches of specified sand surrounding the GSF modules in the mound. Slope the sand away from the mound as described on the plan.

13. Complete backfill with a minimum of 6 inches of cover material measured from the top of the distribution pipe. Use well graded native soil fill that is clean, porous and devoid of large rocks. Do not use wheeled equipment over the system. A light track machine may be used with caution, avoiding crushing or shifting of pipe assembly. Divert surface runoff from the system. Finish grade to prevent surface ponding. Topsoil and seed system area to protect from erosion.

14. Divert surface runoff from the system. Finish grade to prevent surface ponding. Topsoil and seed system area to protect from erosion.

5.0 Dosing Distribution Guidance

DOSING DESIGN CRITERIA: Dosing volume must be set to deliver a maximum of **3 gallons per Module** per dosing cycle, not to , exceed 20% of the estimated average daily wastewater flow per TGM 4.19.3.3.3 Dose, No. 4. - Each dose delivered to the infiltrative surface of the drainfield should not exceed 20% of the estimated average daily wastewater flow. Head loss and drain back volume must be considered in choosing the pump size and force main diameter.

6.0 Pressure Distribution Guidance

Standard procedures for design of pressure distribution networks apply to the GSF filter. A minimum orifice size according to the regulations shall be maintained. A drain hole is required at the 6 o'clock position of each pressure lateral for drainage purposes. The lateral pipe network, constructed of PVC Sch. 40 pipe *(size per design and code),* is placed within a standard 4-inch perforated pipe. The perforation in the 4-inch outer pipe are set at the 4 and 8 o'clock position, the drilled orifices on the pressure pipe are set to spray at the 12 o'clock position directly to the top of the 4-inch perforated pipe as shown below. Pressure clean outs are required at the end of each lateral.

FIGURE 9: PRESSURE PIPE PLACEMENT

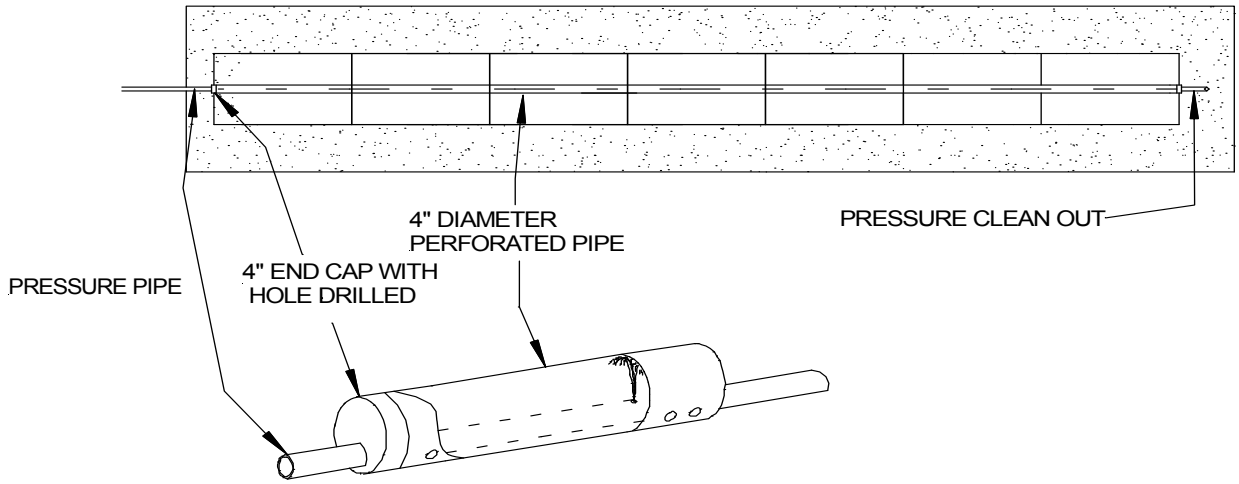

PRESSURE PIPE CROSS SECTION FOR ALL APPLICATIONS

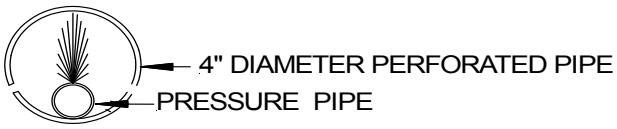

FIGURE 10: PRESSURE CLEAN OUT

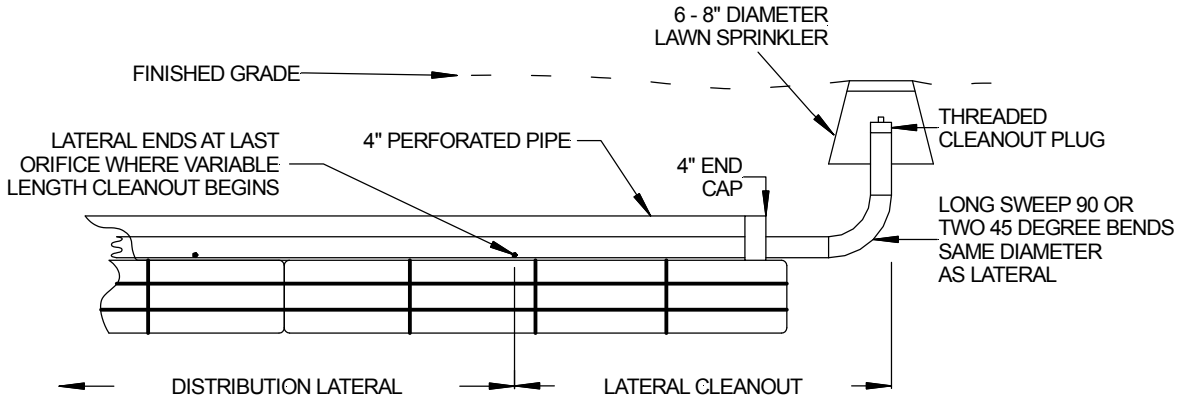

FIGURE 11: CONTOURED TRENCH PRESSURE DISTRIBUTION

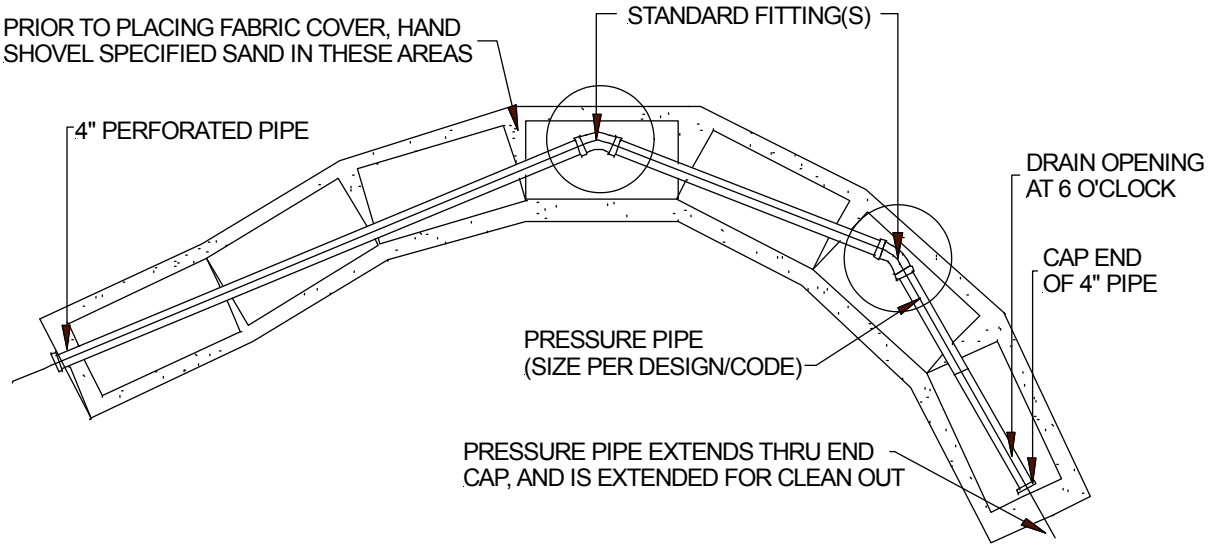

GSF Pressure Distribution trench placed on a contour or winding trenches to maintain horizontal separation distances may also be used in Dosed or Gravity system by removing the pressure pipe and using the 4-inch diameter perforated distribution pipe.

7.0 System Ventilation

7.1 SYSTEM VENTILATION: Air vents are required on all absorption systems located under impervious surfaces or systems **with *more than 18 inches of cover material*** as measured from the top of the GSF module to finished grade. This will ensure proper aeration of the modules and sand filter. The GSF has aeration channels between the rows of GSF modules connecting to cuspations within the GSF modules. Under normal operating conditions, only a fraction of the filter is in use. The unused channels remain open for intermittent peak flows and the transfer of air.

7.2 VENT PIPE FOR GRAVITY AND LOW PRESSURE SYSTEMS: Systems with over 18” of cover over the top of the modules require a vent. If the system is a low pressure distribution system, ensure that the LPP clean outs are located in the vent for easy access.

FIGURE 12: VENT LAYOUTS FOR GRAVITY AND LOW PRESSURE SYSTEMS

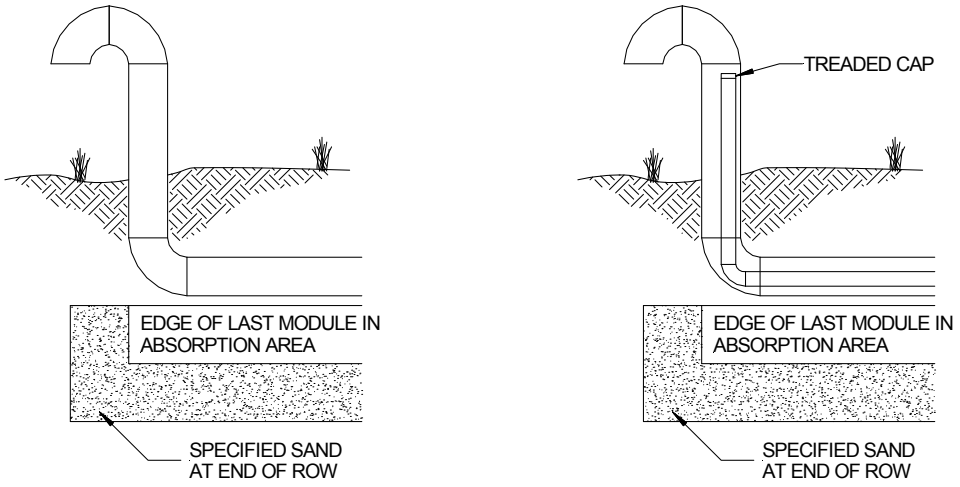

7.3 VENTILATION PLACEMENT: In a GSF system, the vent is usually a 4-inch diameter pipe extended to a convenient location behind shrubs, as shown in the figure below. Corrugated pipe may be used. If using corrugated pipe, ensure that the pipe does not have any bends that will allow condensation to pond in the pipe. This may close off the vent line. The pipe must have an invert higher than the system so that it does not drain effluent.

FIGURE 13: GSF WITH 4” VENT EXTENDED TO CONVENIENT LOCATION

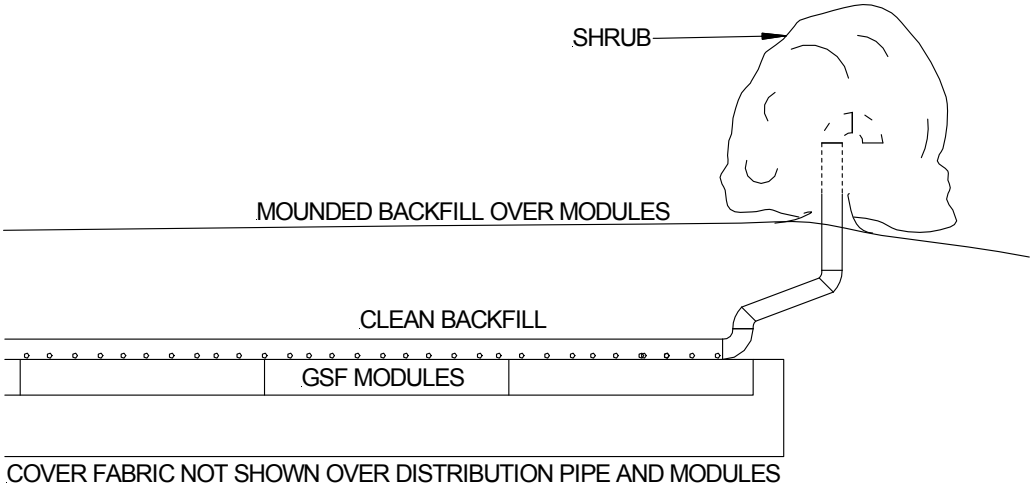

8.0 GSF Inspection Check List

Geotextile Sand Filter, (GSF) Checklist				
Facility Owner:				
Facility Address:				
Installation Date: (MDY)				
Previous Inspection Date: (MDY)				
Date of Inspection: (MDY)				
Residential Number of Bedrooms:				
Is this a Commercial Design? If yes what type:	Yes	No		
What is the estimated BOD5 and TSS strength?	BOD5	TSS	Comments	
Observation Port Location(s):	1		2	3
Inspection Data, (complete all fields)				
Is daily flow within the system design flow? If no, explain:	Yes	No		
Does the owner verify the system use as described above? If no, explain:	Yes	No		
Septic tank last inspection date:	Date			
Inspected by:				
Septic tank last pumped date:				
Is pumping recommended?	Yes	No		
Condition of the soil absorption system: Wet, Dry, Firm, Soft, Vegetative, or Other. If Other, explain:	W	D	S	F	V	
Is there evidence of storm water flows or erosion over the septic system? If yes, explain:	Yes	No		

Is there evidence of soil slump or compaction by traffic or other means in the vicinity of the soil absorption system? If yes, describe:	Yes	No	Comments
Is effluent visible through the observation port? If yes, describe the condition and the fluid level:	Yes	No	Comments
Is there a garbage disposal in the home?	Yes	No	Comments
Is a water softener connected to the system?	Yes	No	Comments
Are solids visible through the observation port? If yes, describe the condition and depth of solids:	Yes	No	Comments
Is there evidence of surcharging or effluent ponding in the D-Box? If yes, describe and measure:	Yes	No	Comments
Are the system vents in place?	Yes	No	Comments
Are they operational? If no, describe conditions and location:	Yes	No	
Describe any other pertinent issues:			

Inspected by:	
License Number:	
Date:	
Time:	
Print Name & Signature of Inspector:	
I certify I have inspected the system at the above address, completed this report, and the information reported is true, accurate, and complete.	

eljen CORPORATION

Innovative Environmental Products and Solutions

APPENDIX D

OWNER'S MANUAL

This report may not be reproduced in whole or in part
without the expressed written consent of NSF International

eljen CORPORATION

Innovative Environmental Products and Solutions Since 1970

Septic System Owner's Manual

How your septic system works and how to keep it working for you and the environment

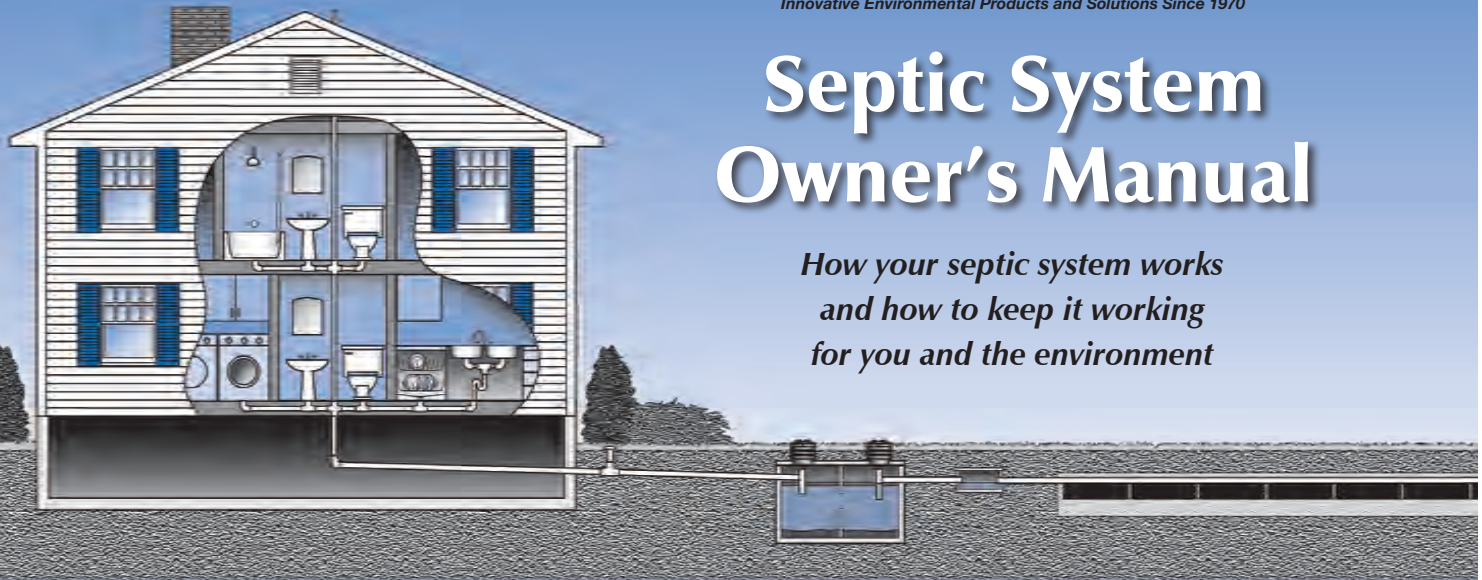

GSF®

eljen Geotextile Sand Filter

NSF®

14/06/2015 55/09/90 Report may not be reproduced in whole or in part without the expressed written consent of NSF International 2015
Final Report
Page 43 of 59

Table of Contents

Introduction 3

GSF System 4

GSF System Description.....5

How the GSF System Works 5

GSF System Operation 6

Nature of Household Sewage 7

The Septic System 7

The Septic Tank.....8

GSF System Designs 9

Septic Tank Effluent Filters.....10

Pumped Systems 10

System Care and Maintenance 11

Septic Tank Pumping.....11

Potential System Problems.....12

Preventing System Problems 13

Service and Maintenance Record 15

Map of Your Septic System 15

System Details 16

14/06/2015 15:09:00 Page 44 of 59
Final Report
This report may not be reproduced in whole or in part without the expressed written consent of NSF International
August 2015

Introduction

No one budgets for a septic system failure. A new residential septic system can cost anywhere from $4,000 to more than $20,000 to install. If the system is not maintained, the soil around the system could become clogged causing sewage to overflow on to the ground or back up into the house. Bottom line, rebuilding a failed septic system is an expensive burden on the homeowner.

Preventing a septic system failure is easier and more affordable than it is to correct. By keeping harmful materials out of the system and by pumping out the septic tank at least every three years, the homeowner can protect their system against premature failure. The minimum cost of having the septic tank pumped is wise insurance to protect your homes wastewater system.

This manual outlines the principles of septic system operations and explains the basic maintenance procedures that will lengthen the life of your system. If properly operated and maintained, your Eljen wastewater system can provide many years of trouble-free service.

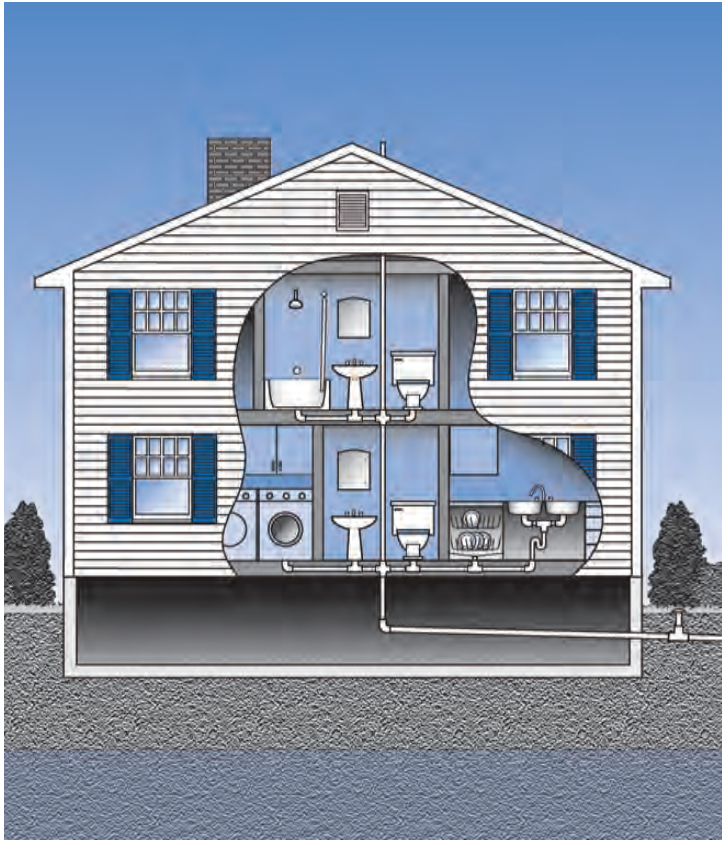

14/06/2015 15:09:01 Page 45 of 59
Final Report
Reproduction may not be reproduced in whole or in part without the expressed written consent of NSF International August 2015

The Eljen GSF System

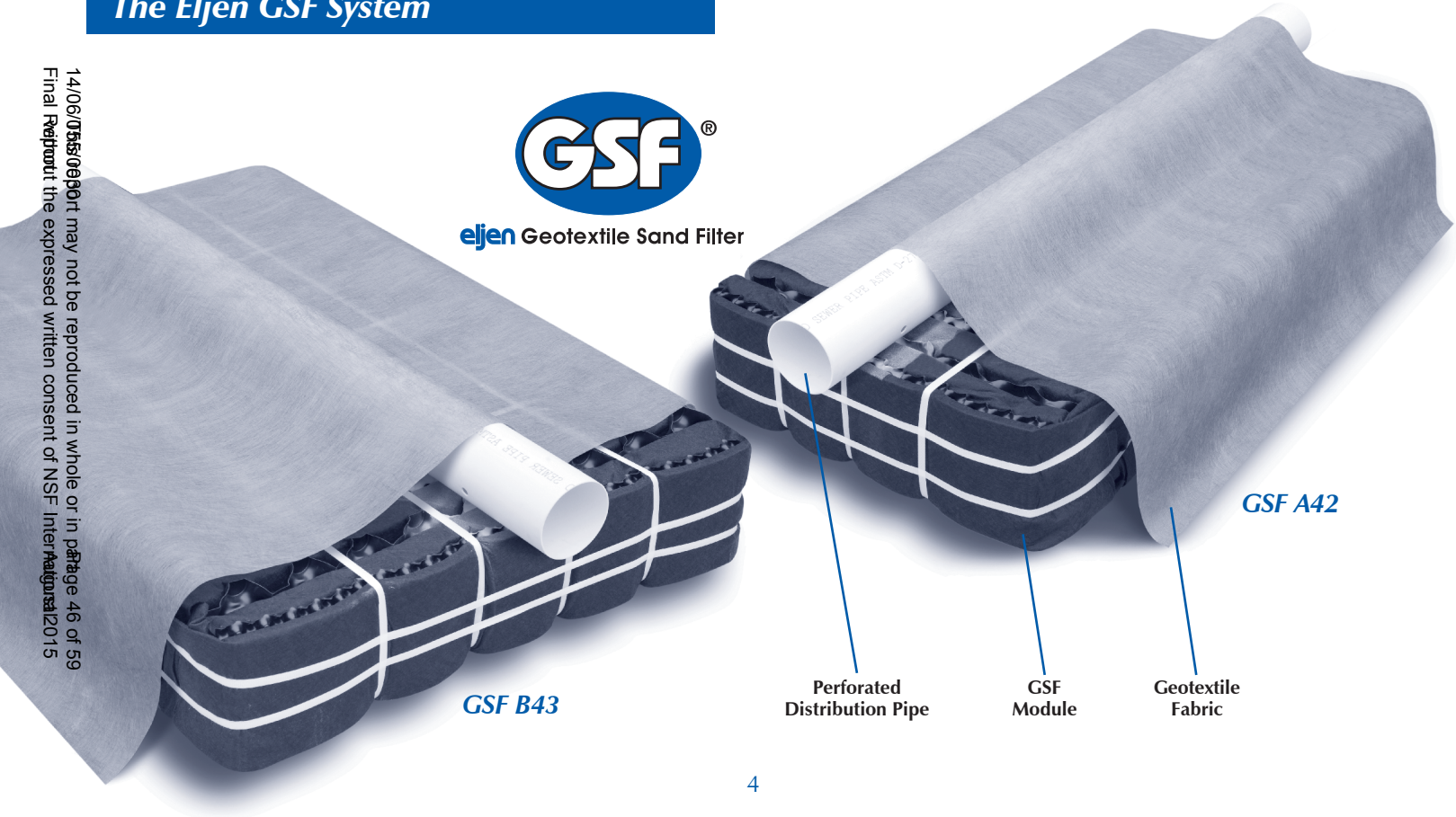

14/06/2015 Page 46 of 59
Final Report
This report may not be reproduced in whole or in part without the expressed written consent of NSF International.

GSF System Description

The Eljen GSF Geotextile Sand Filter system is a cost-effective upgrade from other septic technologies. Unlike other systems that treat effluent only once, the GSF's patented Bio-Matt™ pre-treatment process treats septic effluent twice. That means that the soil can absorb the effluent more easily, resulting in a better-performing system in a smaller area than other systems.

TESTED FOR PROVEN PERFORMANCE

The Eljen GSF system technology is based on research conducted by nationally recognized engineering scientists from the University of Connecticut. Eljen Corporation has over 30 years of success in the onsite wastewater industry, with tens of thousands of systems currently in use. The GSF is recognized by regulatory officials and experts in the industry as one of the most reliable wastewater treatment technologies in the market-place today.

The GSF technology is based on scientific principles which state that improved effluent quality provides increased soil absorption rates. GSF's proprietary two-stage Bio-Matt™ pre-filtration process improves effluent quality while increasing reliability and ease of operation.

How the GSF System Works

- Incoming effluent and bacteria flow through the perforated pipes which distribute the effluent over the Modules.
- Open air channels in the Modules allow beneficial bacteria to grow on the Bio-Matt fabric and treat effluent.
- A geotextile fabric covers the top and sides of the GSF Modules, protecting the system's sand and soil from fine particles that can clog the system. It also helps maintain effluent storage inside the Modules.
- After effluent passes through the GSF Modules, a lighter, secondary biomat forms on the layer of sand below the system, where the treatment process is continued.
- Treated effluent is then absorbed by the native soil where final filtration takes place.

eljen Geotextile Sand Filter

14/06/2015 Final Report Page 47 of 59
This report may not be reproduced in whole or in part without the expressed written consent of NSF International August 2015

GSF System Operation

This schematic shows the inner workings of the GSF Module and the overall operation of a GSF System.

- **Porous Top of the GSF System** allows evapotranspiration and oxygen exchange for better effluent treatment.
- **Anti-Siltation Fabric** keeps fines out of the GSF system
- **Untreated Effluent**
- **Bio-Matt™ Fabric**
- **Cuspated Plastic Core** provides separation between layers of Bio-Matt™ fabric. Maintains structural integrity of Modules & aids oxygen transfer. Increases treatment surface area and effluent storage capacity.
- **Filtered Effluent**
- **Treated Effluent**

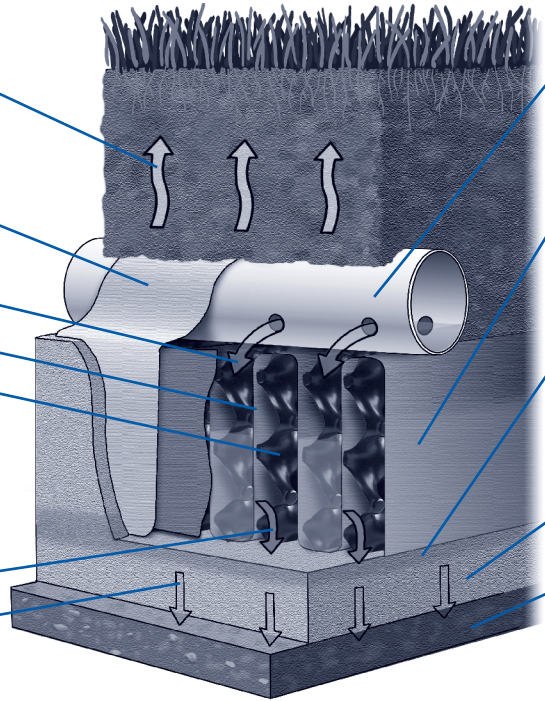

Perforated Pipes distribute effluent to the GSF system. Pipes are secured to the GSF Modules with preformed metal clamps.

Primary Treatment Zone forms on Bio-Matt™ fabric. Significant fabric is provided for every ft^2 of soil interface.

Secondary Treatment Zone forms at sand layer. Long term acceptance rate of this biomat layer is significantly increased as compared to conventional systems.

Specified Sand Layer provides additional filtration

Native Soil or Fill provides final filtration

14/06/05 55/09/90 Page 48 of 59
Final Report August 2015
Report may not be reproduced in whole or in part without the expressed written consent of NSF International

The Nature of Household Sewage

Household sewage is a combination of wastewater from several sources including sinks, toilets, showers, washing machines, dishwashers, and garbage disposals. The largest source of household sewage may vary depending upon the number of residents and water-using appliances within the home. Organic matter comes mostly from toilets and garbage disposals, while sinks, showers, and washing machines contribute large amounts of wastewater containing only small amounts of soap and dirt (including grease, detergents, lint, and vegetable matter).

NOTE: Your State and/or Local Code may require larger septic tanks and septic systems to accommodate garbage disposals.

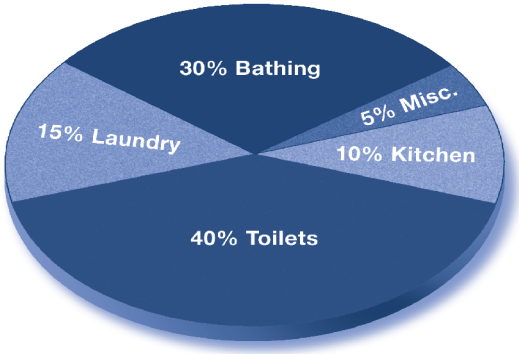

The Septic System

Your septic system is a two-part sewage treatment and disposal system buried in the ground. It is composed of a septic tank and a treatment system, and may have filters, pumps, and other components depending on your location and system demands. The sewage generally flows by gravity: first, into the septic tank where larger particles settle out and some primary decomposition takes place, and then into the wastewater system where it is further decomposed before slowly soaking into the soil.

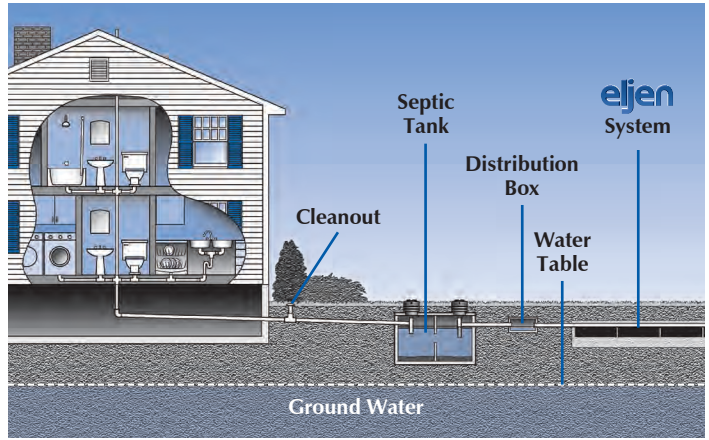

14/06/05 15:09:00 Page 49 of 59
Final Report 1 April 2015
This report may not be reproduced in whole or in part without the expressed written consent of NSF International

The Septic Tank

Untreated household sewage would quickly clog any system if applied directly to the soil. The function of the septic tank is primarily a settling tank allowing solids to settle to the bottom of the tank while a somewhat cleaner liquid is discharged to the wastewater system for additional treatment. Septic tanks may contain one or more compartments, or the designer may have specified two or more tanks for your system.

Regardless of the number of compartments or tanks in your system, the basic principle is the same. Within the tank, as shown below, four important processes take place.

- The heavier, solid particles in the sewage settle to the bottom of the tank forming a layer of sludge. Lighter materials, including fat and grease, float to the surface, forming a scum layer.
- Bacteria living in the septic tank break down some of the organic solids into liquid components, helping to reduce the build up of sludge in the tank.
- Sludge and scum are stored in the septic tank rather than being allowed to flow out of the septic tank, where they would quickly create problems.
- The septic tank filter and/or baffles prevent scum and other floatable materials from flowing out to the wastewater system.

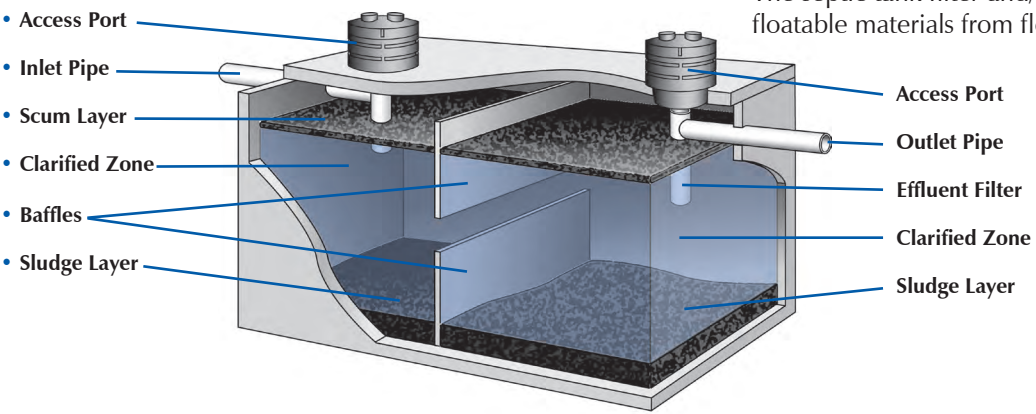

14/06/2015 Final Report
This report may not be reproduced in whole or in part without the expressed written consent of NSF International
Page 50 of 59
August 2015

GSF System Designs

In a typical gravity-fed septic system, after primary treatment in the septic tank (ST), the effluent flows to the distribution box located just before the system. In level systems, the distribution box divides the flow equally to the rows of GSF Modules. In sloped systems, called serial distribution, the effluent flows first to the highest row and then, by overflow pipes, it passes to successively lower rows of Modules.

All GSF systems are installed on a layer of clean, medium to coarse specified sand. The effluent flows into the Modules through perforated plastic pipes which are secured to the tops of or within the Modules. A geotextile fabric covers the GSF Modules and distribution pipe assembly. This fabric prevents backfill materials and silt from entering the GSF Modules.

TRENCH SYSTEM—Straight or Curved

IN-GROUND SYSTEM

BED SYSTEM

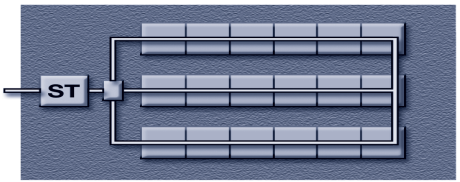

SERIAL DISTRIBUTION SYSTEM

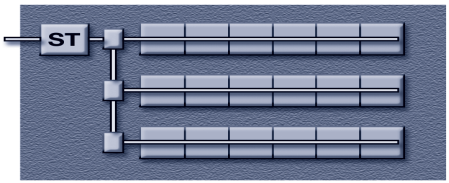

MOUND SYSTEM

SLOPED SYSTEM—In-Ground or Mound

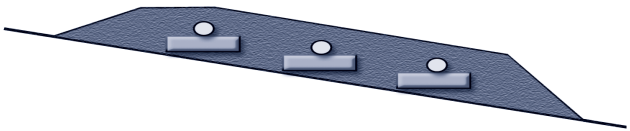

14/06/0155/0090 Page 51 of 59
Final Report August 2015
Reproduction of this report may not be reproduced in whole or in part without the expressed written consent of NSF International

Septic Tank Effluent Filters

Your septic system may include an effluent filter, which may be located at the outlet of the septic tank, or in a separate tank located just after your septic tank. Effluent filters protect your Eljen system from solids that may carry over from the septic tank during peak usage. By limiting the maximum size of particles entering the GSF Modules to about 1/16 inch, they safeguard your system from unnecessary failure.

While effluent filters are partially self-cleaning, they must be thoroughly cleaned when the tank is inspected. When operating properly, they provide a fail-safe reminder that your tank needs pumping. Effluent filters may also be added to an existing system, either in the tank or externally. Filters must be installed before a pump chamber and should be easily accessible when the tank is serviced.

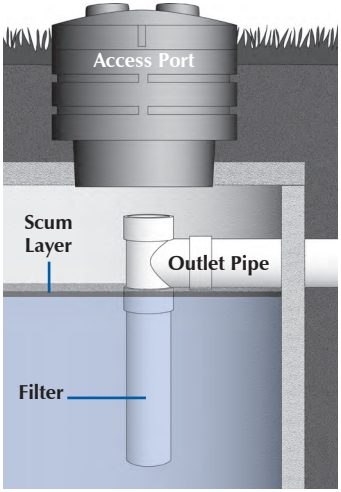

Pumped Systems

Some site conditions require that the system is installed at a higher elevation than the septic tank. When this is the case, an effluent pump and pump chamber are used to raise the sewage to the system's elevation. The pump chamber may be located in a separate tank, or it may be placed in a second compartment within the septic tank.

Effluent levels in the pump chamber are controlled by internal switches that turn the pump on and off, sending effluent to the system by dosing or pressure distribution.

14/06/0155/0090 Page 52 of 59
Final Report August 2015
This report may not be reproduced in whole or in part without the expressed written consent of NSF International

14/06/0155/0090 Page 53 of 59
Final Report Revision 1 August 2015
This report may not be reproduced in whole or in part without the expressed written consent of NSF International

SEPTIC TANK PUMPING

- Do not wait until your system shows signs of failure to have your septic tank pumped out. Waiting can mean complete clogging and an expensive repair bill. A septic tank filter will gradually slow down effluent flow over 2 to 3 years as a reminder that your tank should be serviced. Filters in residential systems usually need cleaning only as often as you pump the tank. Call a professional to inspect your system.
- Clean your filter and pump your tank at a minimum of every 3 years.
- For a list of septic tank service providers in your area, consult your local health department, phone directory, or the Internet.
- If your system's access manholes are at ground level or are clearly marked or mapped, the job of pumping the tank should be fast and easy. While your tank is being inspected, ask the operator to examine the inlet and outlet baffles and/or septic tank filter. If anything is broken, have repairs done immediately. The inlet should also be checked to see if wastewater is continuously flowing into the tank from previously undetected plumbing leaks.
- It is not necessary to leave any of the sludge in the tank as "seed." Incoming sewage contains all the bacteria needed for proper operation. Acids or bleaches should not be used to clean the tank.
- The use of enzymes or other "miracle" septic system additives has not been shown to be of significant value. It has been observed that some of these additives can actually harm your system. Regular pumping remains the best insurance against system failure.
- Keep accurate records of your system's inspections and pumping in the space provided on page 18 of this manual.

INTERMITTENT OR EXTENDED PERIODS OF NON-USE

The system does not require startup time to obtain the required treatment levels. No additional additives or substances are required either. The system does not require any changes for intermittent or extended periods of non-use. Continue to adhere to the maintenance schedule.

Potential System Problems

SIGNS OF A FAILING SYSTEM:

- Slow draining toilets or fixtures
- Sewage backing up into the house
- Sewage odors near the field or tank
- Sewage breakout on to the lawn

Problems with septic systems can be quite difficult to analyze. Whenever your system is not operating properly, it is best to contact a trained professional, such as the installer who constructed your system or a licensed septic system pumper. Your area Eljen distributor will be able to recommend trained personnel to assist you. Keep a copy of your design plan on hand for use in analyzing any malfunctions. Always be sure to document any inspections or maintenance done to your system.

If toilets or fixtures are draining slowly and your system has a septic tank filter, check your service records to see if it has been too long between tank servicing and pumping. The pipe between the tank and the distribution box can also be checked for obstructions. If necessary, have your tank inspected, pumped, and clean the septic tank filter. Remember, the filter is there to protect your system.

If sewage is backing up into the house and you have a pumped system, have the pump and pump controls checked to make sure they are functioning properly. Make sure that the pump dose is not excessive and/or is set according to the original design. The distribution box can be exposed to determine if effluent is properly flowing out of the pump chamber. Also note that in winter, effluent can freeze in the force main or the distribution box and block sewage flow if the system is not used for a period of time.

If you detect sewage odors, sewage over or near the system, your system is overloaded. This may be caused by excessive water use and/or ground water intrusion into the septic tank through a leaking tank seam. Check your water consumption, check for leaky toilets or fixtures, and have your tank pumped so that the system can be checked for ground water intrusion into the tank, especially at seasonal high water time.

Sewage odors coming from vent pipes are common with all types of disposal systems. Call us for information about activated charcoal filters that can be attached to the vent pipes.

NOTE: If a problem occurs with your system or service is required, contact your service provider. Their information is found on the data plate attached to the alarm and in the electrical box of your system.

14/06/2015 Report may not be reproduced in whole or in part without the expressed written consent of NSF International
Final Report Page 54 of 59 August 2015

Preventing System Problems

DO'S

- **DO** have your tank pumped at least every 3 years by a licensed septic tank service provider. Contact your local health department, or look in your phone directory, or on the Internet to find a qualified professional.
- **DO** practice water conservation. Promptly repair leaky faucets and toilets, run washing machines and dishwashers only when full, avoid long showers, and use water-saving features in faucets, showerheads and toilets.
- **DO** divert roof drains and surface water from driveways and hillsides away from the septic system. Keep sump pumps and household footing drains away from the septic system as well.
- **DO** take leftover hazardous household chemicals to your approved hazardous-waste collection center for disposal. Use bleach, drain and toilet bowl cleaners, and disinfectants sparingly and in accordance with product labels.
- **DO** learn the location of your septic tank and system's location and record it in the chart provided on page 18 of this manual. Keep a copy of your plan on file and attach a complete Eljen System Card to a convenient place such as the main electrical panel.
- **DO** use the space provided on page 18 of this manual to keep a record of pumping, inspections and other maintenance.

INITIAL AND EXTENDED SERVICE POLICIES

Included in the cost of your system is the initial two year service contract. Every six months the service provider will inspect the system to ensure it is in proper operation. The system inspection covers the electrical connections, high water alarm function, septic tank and pump tank inspected as well as the point of discharge. Any problems will be noted and the written notes will be given to the homeowner.

After the two year service contract expires, the service provider will offer an extended service contract which will cover the same criteria as the initial service contract.

14/06/2015 Page 55 of 59
Final Report
This report may not be reproduced in whole or in part without the expressed written consent of NSF International

Preventing System Problems

DON'TS

- **DON'T** drive or park over any part of your septic system. The area over the system should be left undisturbed with only a mowed grass cover. Roots from nearby trees or shrubs may clog or damage your system.
- **DON'T** put large amounts of cooking oil or grease into the system.
- **DON'T** discharge water treatment systems into your septic system.
- **DON'T** put non-degradable materials such as disposable diapers, sanitary products, plastic, and cigarettes into the system.
- **DON'T** put poisons such as gasoline, oil, paint, paint thinner, pesticides, antifreeze, or other chemicals into the system.
- **DON'T** use commercial septic tank additives. These products usually do not help and some may hurt your system in the long run.
- **DON'T** wait for signs of system failure. Follow the maintenance advice in this manual.
- **DON'T** use garbage disposals unless your system has been designed according to the requirements of Eljen's Garbage Disposal, Design and Installation Guidelines.

14/06/2015 Page 56 of 59
Final Report
This report may not be reproduced in whole or in part without the expressed written consent of NSF International
August 2015

Service and Maintenance Record

Date	Type of Service	Contractor

Map of Your Septic System

14/06/05 55/09/90 Page 57 of 59
Final Report Revision 1 August 2015
This report may not be reproduced in whole or in part without the expressed written consent of NSF International

System Details

Owner's Name, Address, Phone:	System Address, if Different than Owner's Address:
Contractor's Name, Address, Phone:	**Engineer's Name, Address, Phone:**
Contractor's License Number:	Engineer's License Number:
Installation Date:	Code Gallons / Day / Bedroom:
Number of Bedrooms:	Number of Occupants:
Design Flow in Gallons / Day:	Septic Tank Filter: ❑ No ❑ Yes, Location:
Number of GSF Modules:	Type of GSF Modules:
Number of Rows:	GSF Modules per Row:
System Design: ❑ Level Bed ❑ Trench ❑ Serial Distribution ❑ Pumped ❑ Other:	
System Type: ❑ Repair / Replacement ❑ New Construction ❑ Upgrade	
Structure Type: ❑ Residential ❑ Commercial	
System Use: ❑ Year-Round ❑ Seasonal	

14/06/05 55/06/06 Page 58 of 59
Final Report Revision 1 August 2015
This report may not be reproduced in whole or in part without the expressed written consent of NSF International

Eljen Corporation Standard Limited Warranty for Septic Products

Each GSF Module manufactured by Eljen Corporation and installed and operated as an on-site treatment system in accordance with Eljen Corporation's installation instructions, is warranted to the original system owner against defective materials and workmanship for two years from the date the system is inspected and activated for operation. In order to exercise its warranty rights, the original system owner must notify Eljen Corporation in writing at 125 McKee Street, East Hartford, Connecticut 06108 within 15 days of the alleged defect. Eljen Corporation will supply replacement Modules determined by Eljen Corporation to be defective and covered by this Limited Warranty. Eljen Corporation's liability specifically excludes the cost of removal and/or installation of the Modules; damage to the Modules due to ordinary wear and tear, alteration, accident, misuse, abuse or neglect of the Modules; the placement and or use of improper materials into the system containing the Modules; failure of the Modules or the septic system due to improper design, improper installation, excessive water usage, improper grease disposal, or improper operation; not using specified materials during system construction specifically sand meeting the ASTM C33 specification; or any other event not caused by Eljen Corporation. System owners shall consider the Modules as single use, and re-use of Modules that were previously installed in an activated on-site system shall void this Limited Warranty. For this Limited Warranty to apply, the Modules must be installed in accordance with all site conditions required by state and local codes, all other applicable laws, and Eljen Corporation's installation instructions. This Limited Warranty and its remedies are exclusive and shall apply to no other party other than the original system owner.

THERE IS NO IMPLIED WARRANTY OF MERCHANTABILITY AND THERE IS NO IMPLIED WARRANTY OF FITNESS FOR BUYER'S PARTICULAR PURPOSE; THE IMPLIED WARRANTY OF MERCHANTABILITY AND THE IMPLIED WARRANTY OF FITNESS FOR BUYER'S PARTICULAR PURPOSE ARE HEREBY DISCLAIMED. THERE ARE NO WARRANTIES WHICH EXTEND BEYOND THE DESCRIPTION ON THE FACE HEREOF.

UNDER NO CIRCUMSTANCES SHALL ELJEN CORPORATION BE LIABLE TO THE SYSTEM OWNER OR ANY THIRD PARTY UNDER THIS AGREEMENT OR OTHERWISE FOR (a) ANY LOSS OR DAMAGE CAUSED BY OR ARISING OUT OF ANY DELAY IN FURNISHING ANY MATERIALS UNDER THIS AGREEMENT OR ANY ACT THAT IS NOT INTENTIONAL OR RECKLESS IN NATURE; OR (b) ANY INDIRECT, SPECIAL, EXEMPLARY OR CONSEQUENTIAL DAMAGES, REGARDLESS OF WHETHER ELJEN CORPORATION HAS BEEN ADVISED OF THE POSSIBILITY OF SUCH DAMAGES. WITHOUT LIMITING THE FOREGOING, SYSTEM OWNER OR ANY THIRD PARTY'S SOLE AND EXCLUSIVE REMEDY IN RESPECT OF THIS AGREEMENT AND THE MATERIALS FURNISHED HEREUNDER SHALL BE LIMITED TO THE REFUND TO SYSTEM OWNER OR ANY THIRD PARTY OF THE APPLICABLE FEES ACTUALLY PAID TO ELJEN CORPORATION UNDER THIS AGREEMENT WITH RESPECT TO THE PARTICULAR MATERIALS AT ISSUE. IN NO EVENT SHALL ELJEN CORPORATION'S LIABILITY HEREUNDER EXCEED THE APPLICABLE FEES ACTUALLY PAID TO ELJEN CORPORATION UNDER THIS AGREEMENT WITH RESPECT TO THE MATERIALS AT ISSUE.

This is the Standard Limited Warranty offered by Eljen Corporation. Any purchaser or potential system owner of Modules should carefully read and understand this warranty prior to the purchase of the Modules.

Represented By:

eljen CORPORATION

Innovative Environmental Products and Solutions Since 1970

www.eljen.com

Patented ©2015 1541-6/15

14/06/2015 08:00 Page 59 of 59
Final Report Version 1
Report may not be reproduced in whole or in part without the expressed written consent of NSF International 2015

GSF NSF 2008 Timed Dosed and Pressure Dosed Review

NSF International

July 29, 2008

Ms. Karen Fenchak
Division of Planning and Permits
Bureau of Water Standards and Facility Regulation
Rachel Carson State Office Building
P.O. Box 8774
Harrisburg, PA 17105-8774

Dear Ms. Fenchak,

I am writing to you regarding the GSF/A42 Geotextile Sand Filter System for review under the Pennsylvania Technology Verification Program. Eljen submitted data for two separate systems, the Timed Pressure Dosed system dated March 2008 and the Demand Dosed system dated February 2008. The testing was completed at the Massachusetts Alternative Septic System Test Center (MASSTC), which also prepared the reports describing the test results. There are several considerations we used in evaluating the data to meet your request for review of the testing, including:

- Proper Test Protocol;
- System Performance; and
- Proper Laboratory and Data Qualifications

Test Protocol

As described in the test reports provided by Eljen, NSF/ANSI Standard 40 protocol was used for the testing of both systems. This Standard consists of a 26 week evaluation, with a total of 118 sampling days and four stress sequences. All samples of influent and effluent are 24-hour composites, and are analyzed for $CBOD_5$, total suspended solids, pH, DO and temperature. Routine service and maintenance of the system is not allowed during the test.

The Timed Pressure Dosed testing spanned a period of 32 weeks including the required four stress sequences, exceeding the 26 week required by the Standard. The Eljen filter system was evaluated with proprietary Geotextile sand filter modules for post-septic tank treatment. All samples were collected and analyzed in accordance with the Standard. Samples were analyzed for $CBOD_5$, total suspended solids, pH, DO, and temperature. According to the MASSTC, routine service and maintenance of the system was not performed during the test period.

The Demand Dosed testing spanned a period of 31 weeks including the required four stress sequences. The Eljen filter system was evaluated with proprietary Geotextile sand filter modules for post-treatment. All samples of influent and effluent were 24-hour composite. Samples were analyzed for $CBOD_5$, total

P.O. Box 130140 Ann Arbor, MI 48113-0140 USA
734-769-8010 1-800-NSF-MARK Fax 734-769-0109
E-Mail: info@nsf.org Web:http://www.nsf.org

suspended solids, pH, DO, and temperature. According to the MASSTC, routine service and maintenance of the system was not performed during the test period.

A summary of the performance information and data contained in the reports is provided in the following sections.

System Performance

From performance data for the Timed Pressure Dosed system, we can confirm that the analyses for $CBOD_5$ and TSS were conducted between June 2007 and January 2008. The evaluation consisted of wastewater dosing to a single-compartment septic tank at the rate of 450 gallons per day (gpd). The effluent from the septic tank provided the challenge water for the Eljen Timed Dosed system. There were 126 sampling days recorded for the 32 week test period. The average influent concentration to the septic tank / Eljen system was 200 mg/L BOD_5 and 190 mg/L for TSS. The average effluent concentrations were 2.6 mg/L $CBOD_5$ and 2.7 mg/L for TSS. We can also confirm that the pH values of the effluent were between 5.3 and 7.7. The low pH values occurred prior to November 28, 2007, after which the influent alkalinity was supplemented and pH values remained above 6.0.

The performance data for the Demand Dosed system indicates that the analyses for $CBOD_5$ and TSS were conducted between June 2007 and January 2008 in the same manner as for the Timed Pressure Dosed system, with dosing of 450 gpd to a single-compartment septic tank. The tank effluent was the challenge water for the Eljen Demand Dosed system. There were 126 sampling days recorded over the 31 week test period, with the average influent to the septic tank/ Eljen system having strength of 200 mg/L BOD_5 and 190 mg/L TSS. The average effluent concentrations were 2.0 mg/L $CBOD_5$ and 2.7 mg/L TSS. The effluent pH ranged between 4.2 and 7.4 over the evaluation period. The low pH values occurred prior to November 28, 2007, after which the influent alkalinity was supplemented and pH values remained above 6.0.

Additional samples were collected for fecal coliform analysis during testing of the Timed Pressure Dosed system between June 2007 and January 2008. There were 69 sampling days recorded for the 32 week test period, with the sample times varying from morning, afternoon, and evening sampling times. The geometric mean of the influent to the septic tank / Eljen system was 5×10^6 CFU/100 mL. The geometric mean for effluent fecal coliform was 3.1×10^3 CFU/100 mL, a 3-log reduction, with a range of 63 to 1.3×10^5 CFU/100 mL.

Fecal coliform samples were also collected during testing of the Demand Dosed system between June 2007 and January 2008. There were 75 sampling days recorded for the 31 week test period, with samples collected during morning, afternoon, and evening sampling times. The geometric mean of the influent to the septic tank / Eljen system was 5×10^6 CFU/100 mL. The log mean reduction in Fecal Coliform was 3.5×10^3 CFU/100 mL, a 3-log reduction, with a range of 79 – 6.3×10^4 CFU/100 mL.

Proper Laboratory and Data Qualifications

The MASSTC is a subcontract test facility to NSF, which includes annual site audits of both the test site and the laboratory. NSF has confidence in their overall capabilities for proper data quality practices and procedures.

Please let us know if you require any further review of the Eljen Systems. We would be glad to provide any further assist if needed.

Sincerely,

Ms. Sharon Steiner
Business Unit Manager
Wastewater Treatment Unit Program
p: 734-827-6846
f: 734-827-7790
steiner@nsf.org

cc: Correspondence (3L030)
Mr. James Donlin – Eljen Corporation

Appendix E

Bio-Microbics Effluent Filters

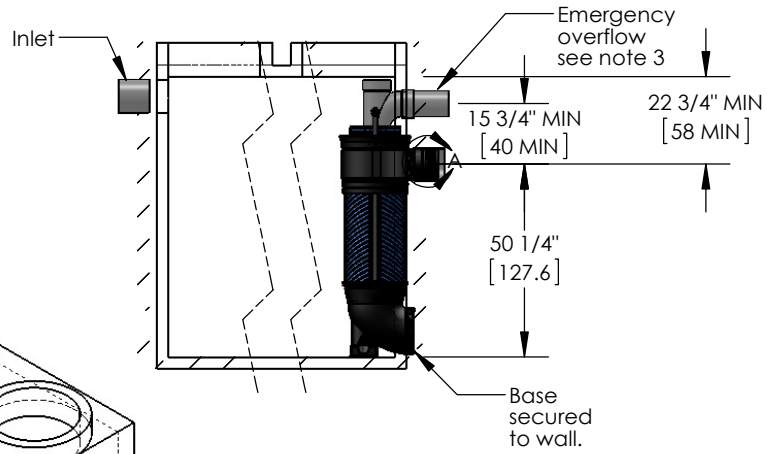

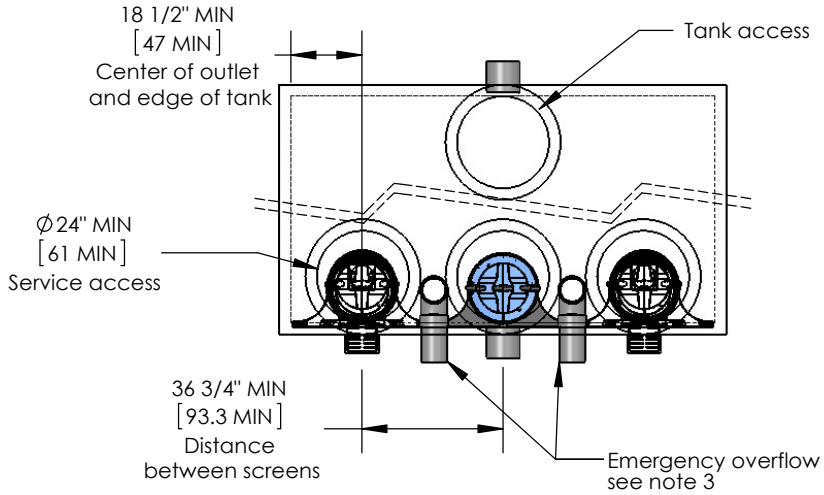

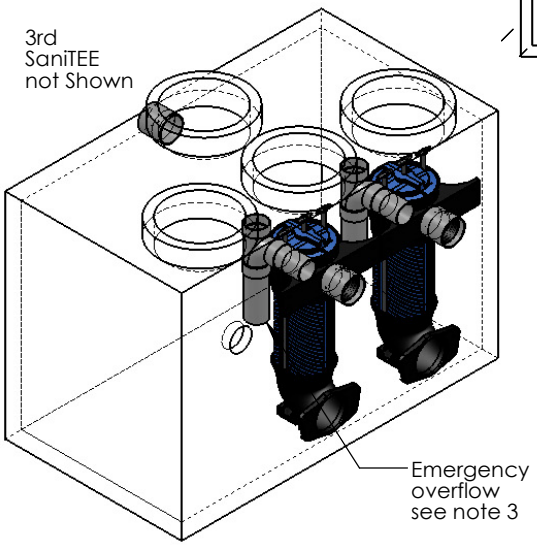

NOTES:

1. MyTEE® screens provide separation of non-biological solids and grit.
2. Each1638 MyTEE® unit should be placed under a 24"[61cm] Ø riser for proper operation of the internal and external swabs.
3. Tank inlet flow line must be at least 2" above the emergency overflow outlet flow line. Emergency overflow must be sized to handle the designed peak flow event.
4. See table for required MyTEE® quantities and maximum tank volume.
5. Outlet pipe not included.
6. All appurtenances to MyTEE® (e.g. septic tank, access risers, etc) must conform to all applicable codes.
7. See additional details in MyFAST® Installation Manual.

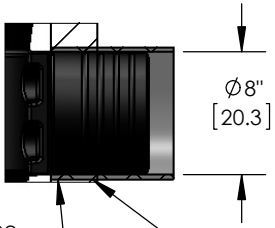

MyTEE® 1638 Screen

Flow	Maximum Tank Volumes	MyTEE® Quantity
20 000 GPD [76 m3/Day]	(1) 2500 gallon [10m3] tank	2
40 000 GPD [150 m3/Day]	(1) 5000 gallon [19m3] tank	2
60 000 GPD [230 m3/Day]	(1) 7500 gallon [28m3] tank	3
80 000 GPD [300 m3/Day]	(1) 10000 gallon [38m3] tank	4
120 000 GPD [454 m3/Day]	(1) 15000 gallon [55m3] tank	6
160 000 GPD [600 m3/Day]	(1) 20000 gallon [75m3] tank	8

DO NOT SCALE

UNLESS NOTED DIMENSIONS ARE IN INCHES [CENTIMETERS] TOLERANCES ± 0.02 IN/IN [± 0.05 CM/CM]

BIO MICROBICS®
BETTER WATER. BETTER WORLD.®

MyTEE

WEIGHT	lb	SIZE	DRAWING NUMBER	SHEET
NAME	DATE	A	MyTEE®	1 OF 1
DRAWN CTC	3/31/2005			
CHECKED PF	10/11/2013	REVISED 10/11/2013	REV. INI-01-W	

THE INFORMATION CONTAINED IN THIS DRAWING IS THE SOLE PROPERTY OF BIO-MICROBICS INC. ANY REPRODUCTION IN PART OR AS A WHOLE WITHOUT THE WRITTEN PERMISSION OF BIO-MICROBICS INC. IS PROHIBITED. DESIGN AND INVENTION RIGHTS ARE RESERVED. IN THE INTEREST OF TECHNOLOGICAL ADVANCEMENT, ALL PRODUCTS ARE SUBJECT TO DESIGN AND OR MATERIAL CHANGE WITHOUT NOTICE.

BIO-MICROBICS © 2014

BioSTEP®

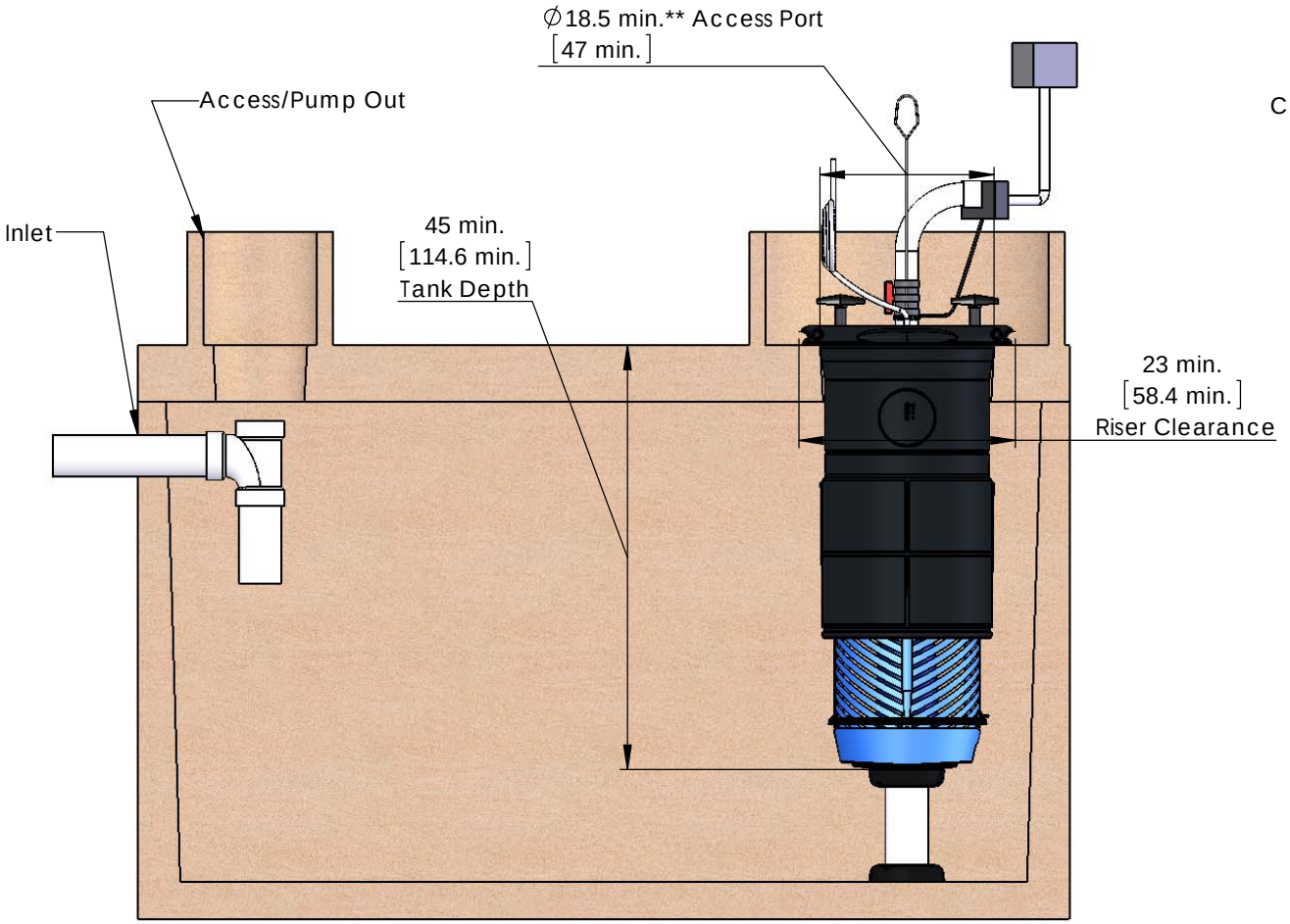

BioSTEP® Features

Screening Device
- CIP- Clean In Place (eliminate system removal)
  - Integral external swab
- Deflects solids
- 1/8" [3 mm] angled slots
- Overflow protection cap
- **Adaptable to larger openings (consult factory)

Pump
- Wide variety of power options
- Designed to use variety of pumps
  - Submersible
  - High head

Control Panel
- Continuously monitors float inputs & flow conditions
- Communicates with external devices
- Trouble shooting LED's
- Compact size
- NEMA 4X
- UL/ETL/CE/CSA/RoHS Certified

DO NOT SCALE

UNLESS NOTED DIMENSIONS ARE IN INCHES [CENTIMETERS] TOLERANCES ± 0.02 IN/IN [± 0.05 CM/CM]

BIO MICROBICS®
BETTER WATER. BETTER WORLD.®

BIOSTEP

WEIGHT	lb	SIZE	DRAWING NUMBER	
NAME	DATE	A	Installation	SHEET 1 OF 3
DRAWN CTC	5/10/2005			
CHECKED PF	5/14/2015	REVISED 5/14/2015	REV. INI-01-A+	

THE INFORMATION CONTAINED IN THIS DRAWING IS THE SOLE PROPERTY OF BIO-MICROBICS INC. ANY REPRODUCTION IN PART OR AS A WHOLE WITHOUT THE WRITTEN PERMISSION OF BIO-MICROBICS INC. IS PROHIBITED. DESIGN AND INVENTION RIGHTS ARE RESERVED. IN THE INTEREST OF TECHNOLOGICAL ADVANCEMENT, ALL PRODUCTS ARE SUBJECT TO DESIGN AND OR MATERIAL CHANGE WITHOUT NOTICE.

BIO-MICROBICS © 2015

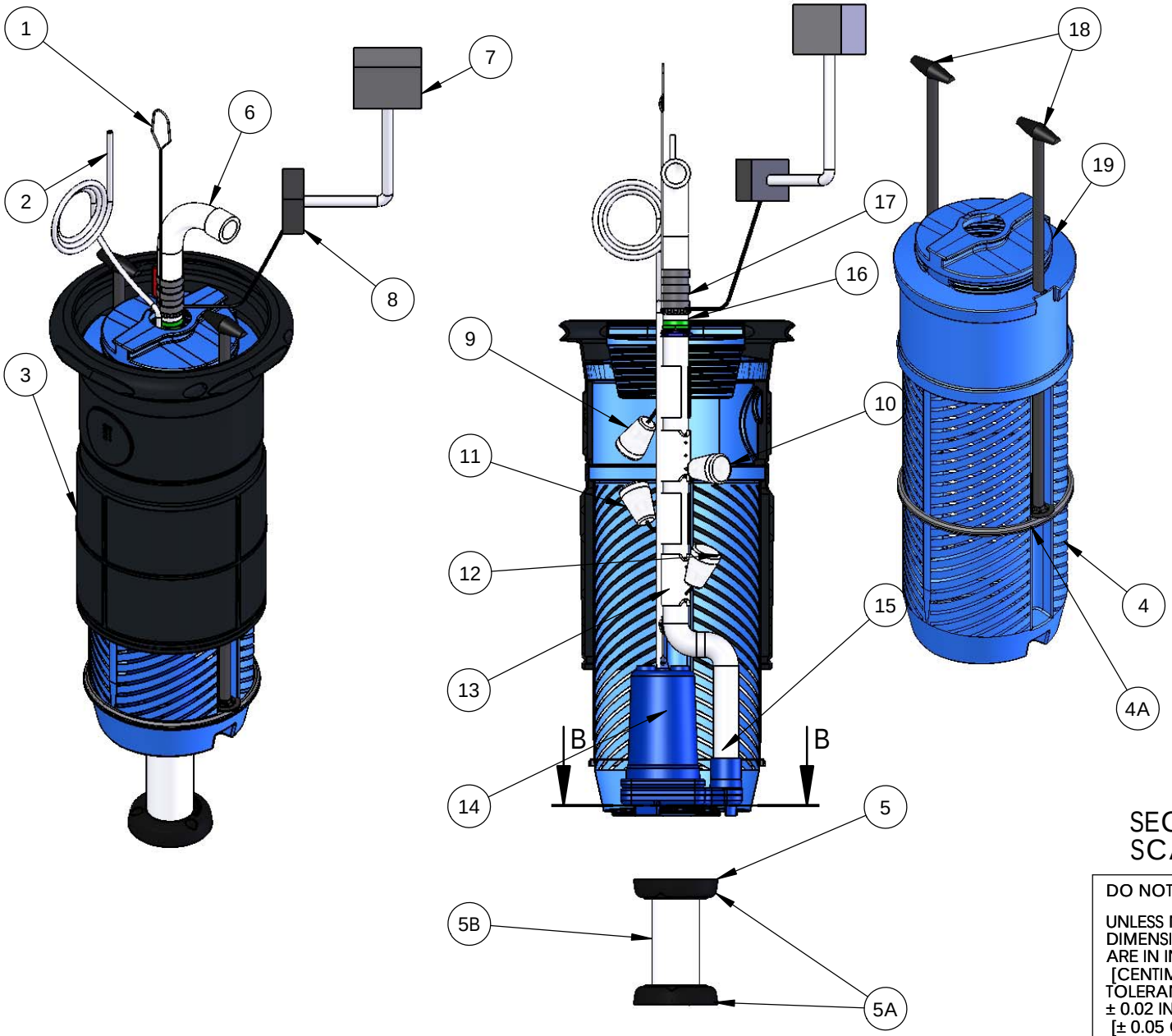

BioSTEP® Features

1. Lifting Cable
2. Power Cord
3. ScumGuard®
4. SaniTEE® Screening Device
   4A. CIP-Clean In Place swab
5. Base Support
   5A. Pipe Mount
   5B. 4" PVC pipe supplied by others
6. Flexible 2 inch PVC Pipe
7. Control Panel NEMA 4X
8. Junction Box NEMA 4X
9. Float high water alarm & overflow protection
10. Float On
11. Float Off
12. Float low water alarm & shutoff
13. Float Clamp
14. Pump
15. PVC Pipe assembly
16. Union, 2 inch PVC
17. Check Valve, 2 inch PVC
18. Swab Handles
19. Overflow Protection Cap

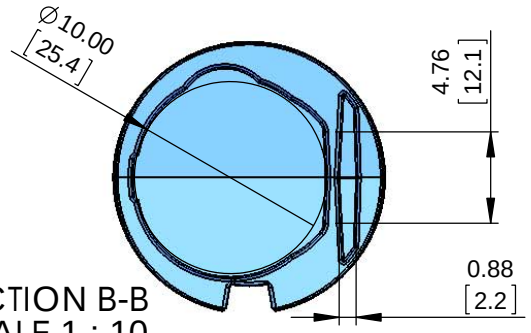

SECTION B-B
SCALE 1 : 10

DO NOT SCALE

UNLESS NOTED DIMENSIONS ARE IN INCHES [CENTIMETERS]
TOLERANCES
± 0.02 IN/IN
[± 0.05 CM/CM]

BIO MICROBICS®
BETTER WATER. BETTER WORLD.®

BIOSTEP

WEIGHT	lb	SIZE	DRAWING NUMBER	
NAME	DATE	A	Components	SHEET 2 OF 3
DRAWN CTC	5/10/2005			
CHECKED PF	5/14/2015	REVISED 5/14/2015	REV. CAT-01	

THE INFORMATION CONTAINED IN THIS DRAWING IS THE SOLE PROPERTY OF BIO-MICROBICS INC. ANY REPRODUCTION IN PART OR AS A WHOLE WITHOUT THE WRITTEN PERMISSION OF BIO-MICROBICS INC. IS PROHIBITED. DESIGN AND INVENTION RIGHTS ARE RESERVED. IN THE INTEREST OF TECHNOLOGICAL ADVANCEMENT, ALL PRODUCTS ARE SUBJECT TO DESIGN AND OR MATERIAL CHANGE WITHOUT NOTICE.

BIO-MICROBICS © 2015

1. GENERAL
The BIOSTEP® septic tank effluent pumping system as manufactured by Bio-Microbics, Inc. consists of the following principle items of equipment: (1) ScumGuard® mounting sleeve, (1) SaniTEE® wastewater screen, (1) sewage effluent pump, and (1) alarm/controls package.

2. TANK
The BioSTEP® system shall be installed in a tank (one or multiple compartments) to be furnished by others. This tank must meet all applicable regulations. The tank must have access port(s) located so that all operation and maintenance functions can be properly performed.

3. SCUMGUARD® MOUNTING SLEEVE
The Bio-Microbics,Inc. ScumGuard® mounting sleeve serves as the mounting device for the BioSTEP® pumping system and also helps to deflect large debris. The ScumGuard® must be mounted in an access port of at least 18.5 inch [47 cm] ∅ utilizing a riser with a minimum internal diameter of 23 inches [58.4 cm]. For access ports greater than 18.5 inches" [47cm] diam. , 3/4" ∅ Sched 80 pipe can be inserted into the ScumGuard® for proper fit (consult factory).

4. WASTEWATER SCREEN and Discharge Assembly
The Bio-Microbics, Inc. SaniTEE® wastewater screen shall be mounted inside the ScumGuard® mounting sleeve. The screen is approximately 16" in ∅ with multiple, acutely angled slots having a 1/8" width. The screen shall be supplied with a screw on top for easy access to the system. The screen shall also have a self-contained external cleaning swab to facilitate Clean In Pace cleaning of the screen. The discharge assembly is made of PVC sched 40 and shall include: 2" PVC union, 2" flexible pipe, 2" ball valve, and 2" SxMIP adapter. All other piping and fittings shall be supplied by others.

5. Sewage Pump
The sewage effluent pump shall be mounted inside the SaniTEE® Screen. The pump provided by Bio-Microbics shall be capable of passing at least a ¾" spherical solid. The pump shall also have the following features: cast iron housing, stainless steel shaft, silicon carbide seals, 2" ∅ NPT discharge port, cast iron impeller, 20 ft of stainless steel retrieval cable, UL778 listing, and a class B insulated motor capable of withstanding an instantaneous internal temperature up to 140° F. High head pumps are available, consult Bio-Microbics Inc. for recommended options.

6. Controls &System
The four float switches (high water alarm/overflow protection, On, Off, & low water alarm/shuttoff) and clamps are to be mounted on the pump outlet piping and installed to allow free movement and proper operation of each float. The panel shall have the following features: NEMA 4X enclosure, UL listing, 72-95 db alarm with exterior silencing mechanism, exterior alarm light, circuit breakers for the pump, and manual pump run control with status light. Controls can be purchased for most power supplies.

7. ELECTRICAL
All electrical equipment shall utilize 220VAC, single phase, 60 Hz power standard (most other power supplies are available). A NEMA 4X junction box and 4 cord grips are included. Wiring must conform to all applicable codes. All conduit, wiring and misc. supplies are to be supplied by others.

8. INSTALLATION AND OPERATING INSTRUCTIONS
All work must be done in accordance with local codes and regulations and installed in accordance with the instructions provided by Bio-Microbics. If at any point during installation or operation there are questions concerning this product, call Bio-Microbics, Inc. at 800-753-3278.

9. WARRANTY
Bio-Microbics, Inc. warrants all new BioSTEP® units against defects in materials and workmanship for a period of one year after installation or eighteen (18 months) from the date of shipment which ever occurs first, subject to the following terms and conditions:
During the warranty period, if any part is defective or fails to perform as specified when operating at design conditions, and if the equipment has been installed and is being operated and maintained in accordance with the written instructions provided by Bio-Microbics, Inc., Bio-Microbics, Inc. will repair or replace at its discretion such defective parts free of charge. Defective parts must be returned by owner to Bio-Microbics, Inc.'s factory postage paid, if so requested. The cost of labor and all other expenses resulting from replacement of the defective parts and from installation of parts furnished under this warranty and regular maintenance items such shall be borne by the owner. This warranty does not cover general system misuse, components which have been damaged by flooding or any components that have been disassembled by unauthorized persons, improperly installed or damaged due to altered or improper wiring or overload protection. This warranty applies only to the STEP unit and does not include any of the house wiring, plumbing, drainage, septic tank or disposal system. Bio-Microbics, Inc. reserves the right to revise, change or modify the construction and/or design of the system, or any component part or parts thereof, without incurring any obligation to make such changes or modifications in present equipment.
Bio-Microbics, Inc. is not responsible for consequential or incidental damages of any nature resulting from such things as, but not limited to, defect in design, material, or workmanship, or delays in delivery, replacements or repairs.
THIS WARRANTY IS IN LIEU OF ALL OTHER WARRANTIES EXPRESS OR IMPLIED. BIO-MICROBICS SPECIFICALLY DISCLAIMS ANY IMPLIED WARRANTY OF MERCHANTABILITY OR FITNESS FOR A PARTICULAR PURPOSE. NO REPRESENTATIVE OR PERSON IS AUTHORIZED TO GIVE ANY OTHER WARRANTY OR TO ASSUME FOR BIO-MICROBICS, INC., ANY OTHER LIABILITY IN CONNECTION WITH THE SALE OF ITS PRODUCTS.
Contact your local distributor for parts and service.

DO NOT SCALE

UNLESS NOTED DIMENSIONS ARE IN INCHES [CENTIMETERS]
TOLERANCES
± 0.02 IN/IN
[± 0.05 CM/CM]

BIO MICROBICS®
BETTER WATER. BETTER WORLD.®

BIOSTEP

WEIGHT	lb	SIZE	DRAWING NUMBER	
NAME	DATE	A	Specifications	SHEET 3 OF 3
DRAWN	5/10/2005			
CHECKED PF	5/14/2015		REVISED 5/14/2015 REV.	

THE INFORMATION CONTAINED IN THIS DRAWING IS THE SOLE PROPERTY OF BIO-MICROBICS INC. ANY REPRODUCTION IN PART OR AS A WHOLE WITHOUT THE WRITTEN PERMISSION OF BIO-MICROBICS INC. IS PROHIBITED. DESIGN AND INVENTION RIGHTS ARE RESERVED. IN THE INTEREST OF TECHNOLOGICAL ADVANCEMENT, ALL PRODUCTS ARE SUBJECT TO DESIGN AND OR MATERIAL CHANGE WITHOUT NOTICE.

BIO-MICROBICS © 2015

Multiple SaniTEE ® Installations

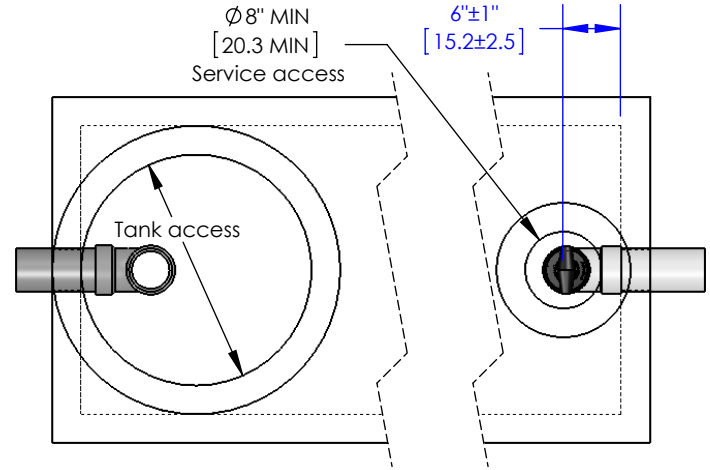

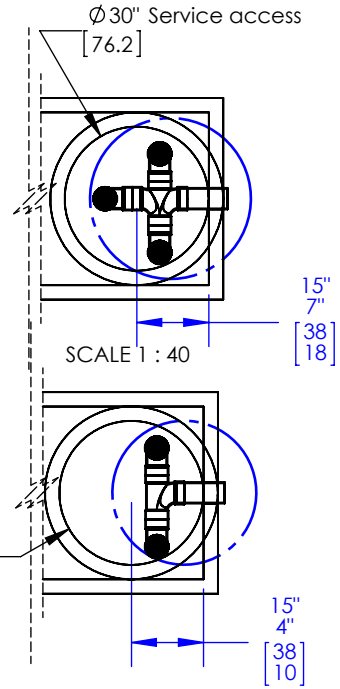

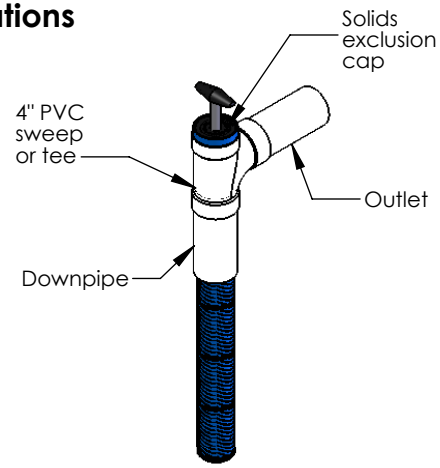

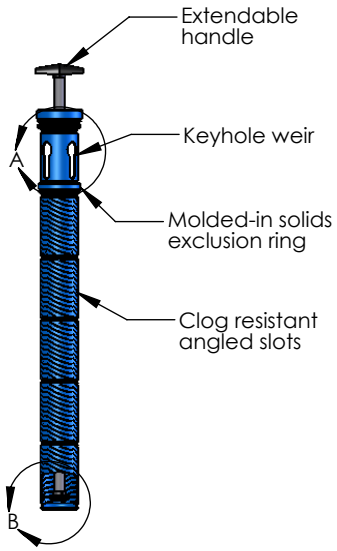

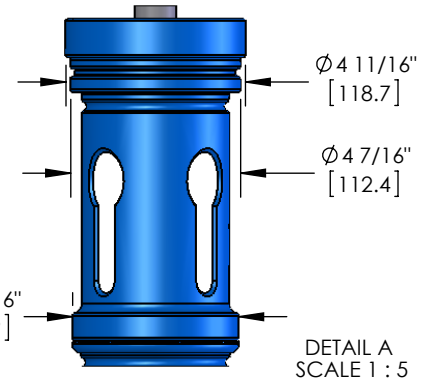

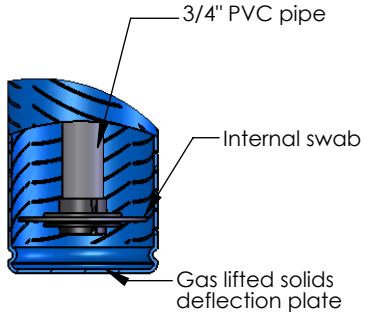

DETAIL B
SCALE 1 : 5

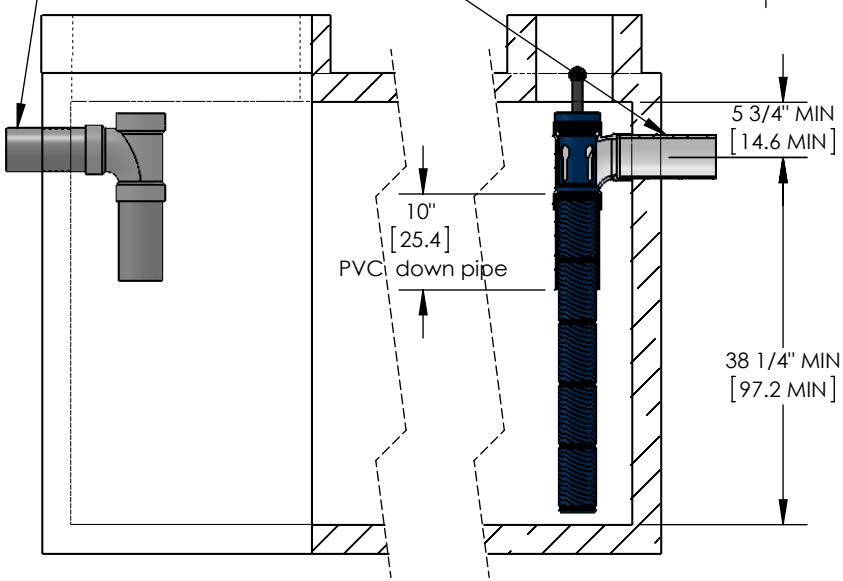

Notes:

- SNT 416 is a 1/16" [1.6mm] Effluent Screen capable of screening up to 1,000 GPD [3.8 cubic meters per day].
- SNT 418 is a 1/8" [3.2 mm] effluent screen capable of screening up to 2,000 GPD[7.6 cubic meters per day].
- Down pipe, outlet pipe, and tee or sweep not included.
- All appurtenances to SaniTEE® (e.g. septic tank, access risers, etc) must conform to all applicable codes.

DO NOT SCALE

UNLESS NOTED DIMENSIONS ARE IN INCHES [CENTIMETERS]
TOLERANCES
± 0.02 IN/IN
[± 0.05 CM/CM]

BIO MICROBICS
BETTER WATER. BETTER WORLD.

4 Inch SANITEE

WEIGHT	lb	SIZE	DRAWING NUMBER	
NAME	DATE	A	SaniTEE® 416 & 418	SHEET 1 OF 1
DRAWN CTC	3/31/2005			
CHECKED PF	6/17/2014	REVISED 6/17/2014	REV. INI-02-H	

THE INFORMATION CONTAINED IN THIS DRAWING IS THE SOLE PROPERTY OF BIO-MICROBICS INC. ANY REPRODUCTION IN PART OR AS A WHOLE WITHOUT THE WRITTEN PERMISSION OF BIO-MICROBICS INC. IS PROHIBITED. DESIGN AND INVENTION RIGHTS ARE RESERVED. IN THE INTEREST OF TECHNOLOGICAL ADVANCEMENT, ALL PRODUCTS ARE SUBJECT TO DESIGN AND OR MATERIAL CHANGE WITHOUT NOTICE.

BIO-MICROBICS © 2014

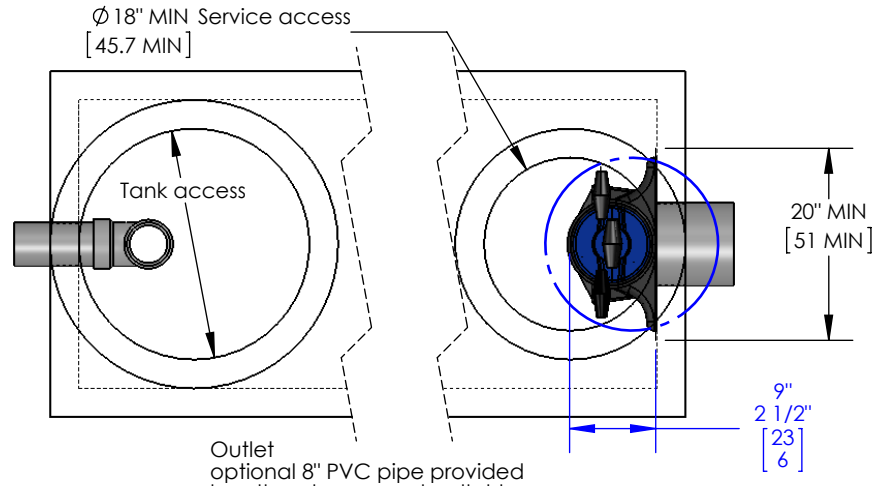

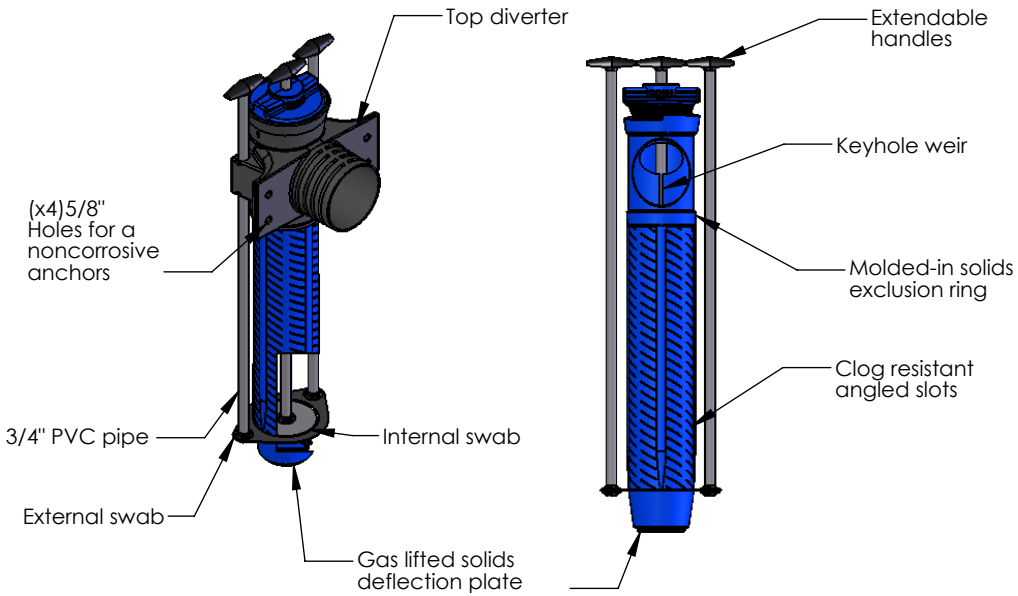

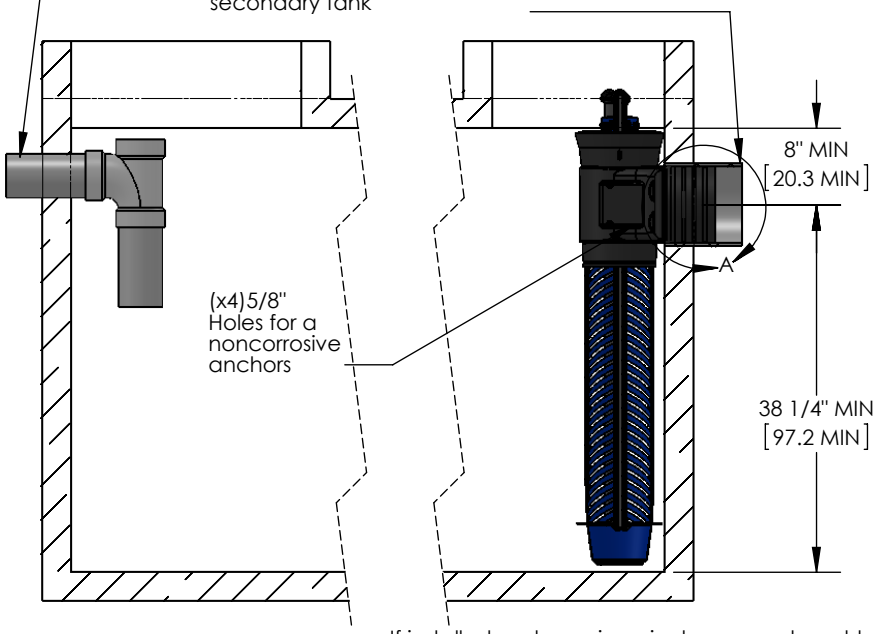

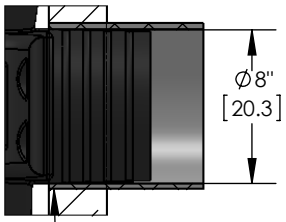

DETAIL A
SCALE 1 : 10

Notes:

- SNT 818-B is a 1/8" [3.2 mm] effluent screen capable of screening up to 3,000 GPD [11 cubic meters per day].
- SNT 818 is a 1/8" [3.2 mm] effluent screen capable of screening up to 6,000 GPD [23 cubic meters per day].
- SNT 838 is a 3/8" [9.5 mm] effluent screen capable of screening up to 10,000 GPD [38 cubic meters per day].
- Outlet pipe not included.
- All appurtenances to SaniTEE® (e.g. septic tank, access risers, etc) must conform to all applicable codes.

DO NOT SCALE

UNLESS NOTED DIMENSIONS ARE IN INCHES [CENTIMETERS]
TOLERANCES
± 0.02 IN/IN
[± 0.05 CM/CM]

BIO MICROBICS
BETTER WATER. BETTER WORLD.

8 Inch SANITEE

WEIGHT	lb	SIZE	DRAWING NUMBER	
NAME	DATE	A	SaniTEE® 818-B, 818, & 838	SHEET 1 OF 1
DRAWN CTC	3/31/2005			
CHECKED PF	6/17/2014	REVISED 6/17/2014	REV. CAT-01	

THE INFORMATION CONTAINED IN THIS DRAWING IS THE SOLE PROPERTY OF BIO-MICROBICS INC. ANY REPRODUCTION IN PART OR AS A WHOLE WITHOUT THE WRITTEN PERMISSION OF BIO-MICROBICS INC. IS PROHIBITED. DESIGN AND INVENTION RIGHTS ARE RESERVED. IN THE INTEREST OF TECHNOLOGICAL ADVANCEMENT, ALL PRODUCTS ARE SUBJECT TO DESIGN AND OR MATERIAL CHANGE WITHOUT NOTICE.

BIO-MICROBICS © 2014

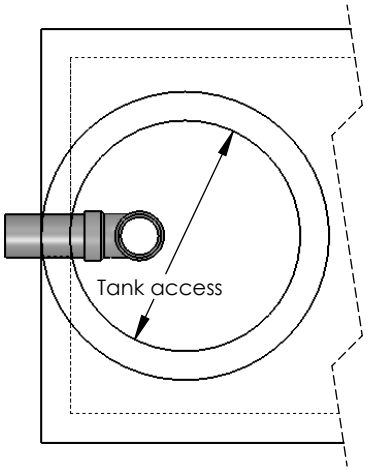

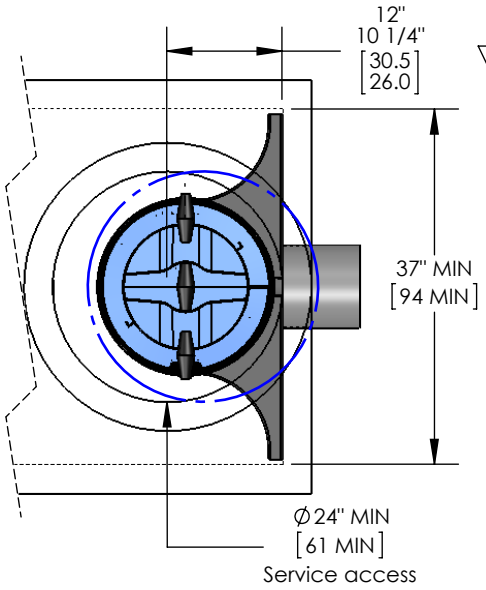

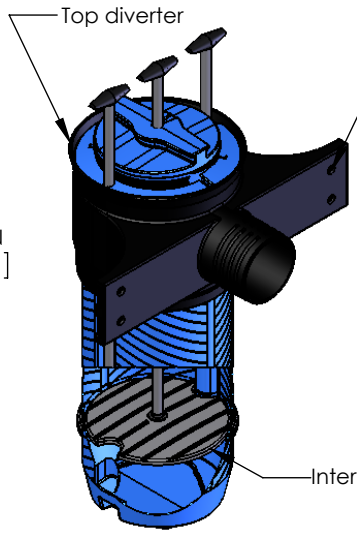

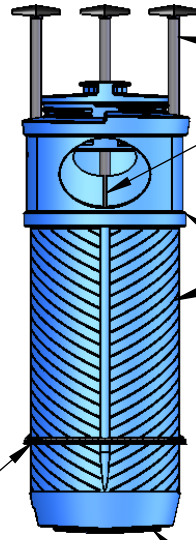

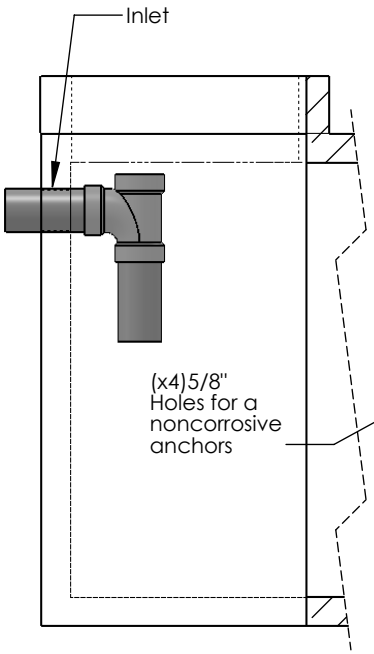

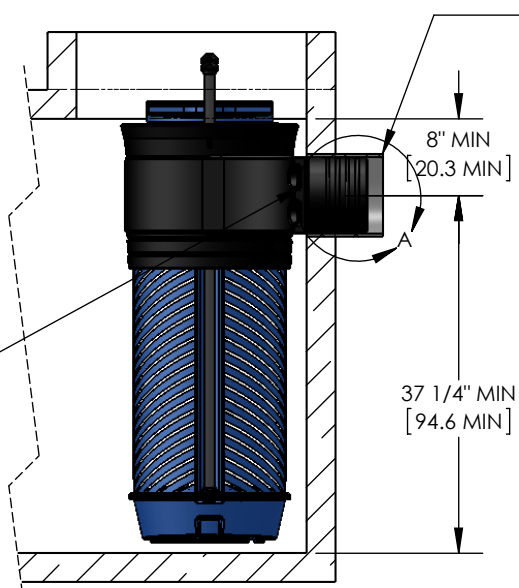

If installed as shown in a single compartment tank the 8" PVC pipe must be water tight within the tank and flush against the inside to mount 8" SaniTEE® top diverter

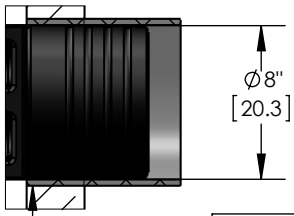

DETAIL A
SCALE 1 : 10

Notes:

- SNT 1618 is a 1/8" [3.2 mm] effluent screen capable of screening up to 10,000 GPD[38 cubic meters per day].
- SNT 1638 is a 3/8" " [9.5 mm] effluent screen capable of screening up to 20,000 GPD [75.5 cubic meters per day]
- Outlet pipe not included.
- All appurtenances to SaniTEE® (e.g. septic tank, access risers, etc) must conform to all applicable codes.

DO NOT SCALE

UNLESS NOTED DIMENSIONS ARE IN INCHES [CENTIMETERS]
TOLERANCES
± 0.02 IN/IN
[± 0.05 CM/CM]

BIO MICROBICS
BETTER WATER. BETTER WORLD.

16 Inch SANITEE

WEIGHT	lb	SIZE	DRAWING NUMBER	
NAME	DATE	A	SaniTEE® 1618 & 1638	SHEET 1 OF 1
DRAWN CTC	3/31/2005			
CHECKED PF	6/17/2014	REVISED 6/17/2014	REV. INI-02-A+	

THE INFORMATION CONTAINED IN THIS DRAWING IS THE SOLE PROPERTY OF BIO-MICROBICS INC. ANY REPRODUCTION IN PART OR AS A WHOLE WITHOUT THE WRITTEN PERMISSION OF BIO-MICROBICS INC. IS PROHIBITED. DESIGN AND INVENTION RIGHTS ARE RESERVED. IN THE INTEREST OF TECHNOLOGICAL ADVANCEMENT, ALL PRODUCTS ARE SUBJECT TO DESIGN AND OR MATERIAL CHANGE WITHOUT NOTICE.

BIO-MICROBICS © 2014

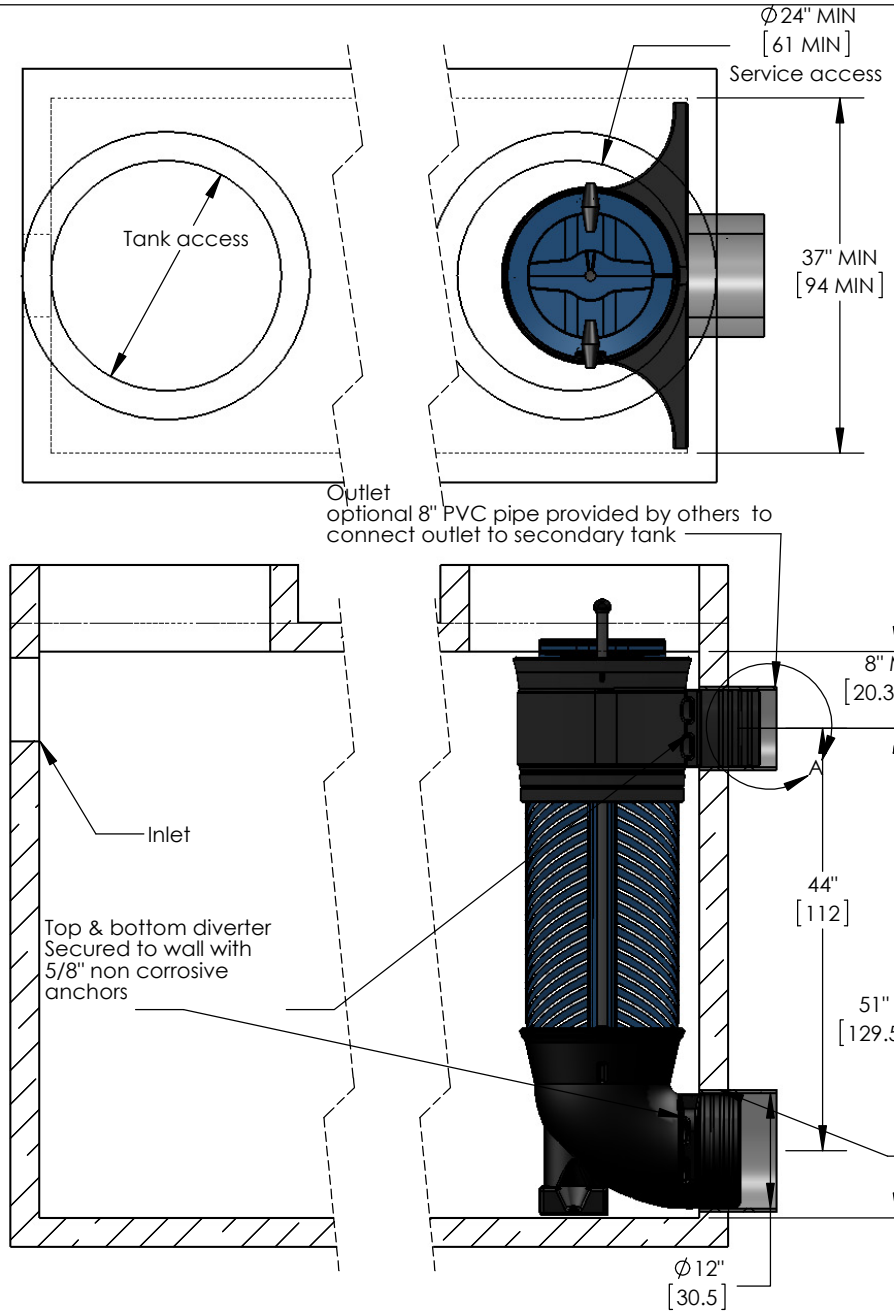

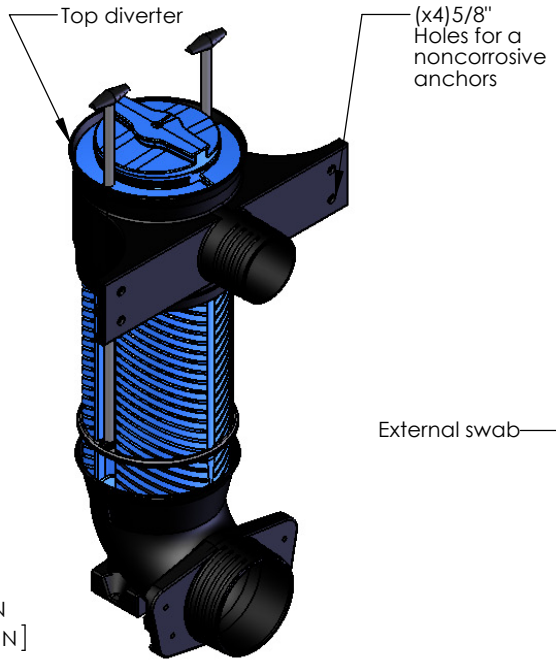

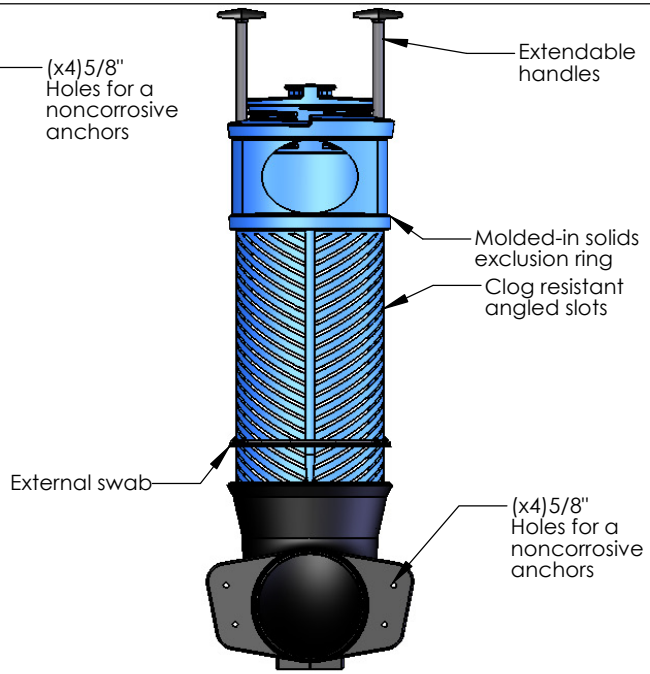

If installed as shown in a single compartment tank the 8" PVC pipe must be water tight within the tank and flush against the inside to mount StormTEE® top diverter

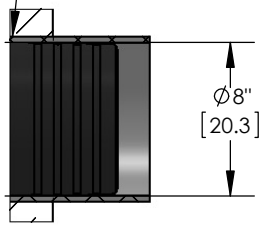

DETAIL A
SCALE 1 : 10

If installed as shown in a single compartment tank the 12" PVC pipe must be water tight within the tank and flush against the inside to install the StormTEE® bottom diverter.

Notes:

- SMT 1618 is a 1/8" [3.2 mm] storm water screen capable of screening up to 2,250 GPM[8.5 cubic meters per minute].
- SMT 1638 is a 3/8" " [9.5 mm] storm water screen capable of screening up to 4,500 GPM [17 cubic meters per minute]
- Outlet pipes not included.
- All appurtenances to StormTEE® (e.g. septic tank, access risers, etc) must conform to all applicable codes.

DO NOT SCALE

UNLESS NOTED DIMENSIONS ARE IN INCHES [CENTIMETERS]
TOLERANCES
± 0.02 IN/IN
[± 0.05 CM/CM]

BIO MICROBICS®
BETTER WATER. BETTER WORLD.®

16 Inch StormTEE

WEIGHT	lb	SIZE	DRAWING NUMBER	
NAME	DATE	A	StormTEE® 1618 & 1638	SHEET 1 OF 1
DRAWN CTC	3/31/2005			
CHECKED PF	10/18/2013		REVISED 10/18/2013	REV. CAT-01

THE INFORMATION CONTAINED IN THIS DRAWING IS THE SOLE PROPERTY OF BIO-MICROBICS INC. ANY REPRODUCTION IN PART OR AS A WHOLE WITHOUT THE WRITTEN PERMISSION OF BIO-MICROBICS INC. IS PROHIBITED. DESIGN AND INVENTION RIGHTS ARE RESERVED. IN THE INTEREST OF TECHNOLOGICAL ADVANCEMENT, ALL PRODUCTS ARE SUBJECT TO DESIGN AND OR MATERIAL CHANGE WITHOUT NOTICE.

BIO-MICROBICS © 2014

Appendix F

Septic Filter Solutions, Treit filters

Septic Filter Solutions, LLC
septicfiltersolutions.com

State of Idaho
State Water Quality Division – Wastewater Program
1410 N. Hilton St
Boise, ID 83706

Attn: Mr. James Craft

RE: Septic Tank Effluent Filter Request for Approval

Mr. Craft,

The purpose of this letter is to request approval for Treit, Inc. filter models EF-1830, EF-1840, EF-2530, and EF-2540 to be used in septic tanks within the State of Idaho.

Septic Filter Solutions, LLC has been fabricating Treit Inc filters for nearly 30 years. The filters listed above have approvals in multiple states, counties, and health departments Nationwide. Copies of letters of approval are included in this submittal package.

Below I have addressed the items from IDAPA 58 Title 01 Chapter 03 – Individual/Subsurface Sewage Disposal Rules that are applicable to effluent filters:

58.01.03 - Individual/Subsurface Sewage Disposal Rules
11. Outlets. (7-1-93)
a. The outlet of the tank will be at least four (4) inches in diameter. (10-1-90)
-All models being submitted for approval fit a 4" outlet.
b. The outlet of the septic tank and each compartment will be submerged by means of a vented tee or baffle. (10-1-90)
-Baffle tees are designed to be placed on the outlet of the tank.
c. Vented tees and baffles will extend above the liquid level seven (7) inches or more above the liquid level but no closer than one (1) inch to the inside top of the tank. (10-1-90)
-Baffle Tees use a 4" hub bull nose tee with a nominal overall length of 8". Filter models 1840 and 2540 have a 4" PVC cap (with a nominal height of 2"), while models 1830 and 2530 have no cap. These dimensions fall within the requirements stated above.
d. Tees and baffles will extend below the liquid level to a depth where forty percent (40%) of the tank's liquid volume is above the bottom of the tee or baffle. For vertical walled rectangular tanks, this point is at forty percent (40%) of the liquid depth. In horizontal cylindrical tanks this point is about thirty-five percent (35%) of the liquid depth. (10-1-90)
-Baffles can be supplied at the request of the septic tank installer / maintainer per each tank's dimensions per the table included on the 4" Baffle drawing (page 9 of submittal).
e. Tees and baffles should not extend horizontally into the tank beyond two (2) times the diameter of the outlet. (10-1-90)
-Dimensions of baffle tee meet this requirement.

Septic Filter Solutions, LLC
septicfiltersolutions.com

Technical Guidance Manual Individual and Subsurface Sewage Disposal Systems
1.4 Product Approval
Revision: June 8, 2017

All commercially manufactured wastewater components must be approved by the Director prior to installation in a subsurface sewage disposal system (IDAPA 58.01.03.009.01). Plans, specifications, and any associated third-party data (e.g., National Sanitary Foundation [NSF]/American National Standards Institute [ANSI] standards and United States Environmental Protection Agency's [EPA] environmental technology verification testing) for commercially manufactured wastewater components must be submitted to DEQ's on-site wastewater coordinator for approval. The following plans and specifications are required to be submitted for product approval (IDAPA 58.01.03.009.02):

-Detailed construction drawings: See pages 4-9 of submittal package
-Capacities (i.e., volume and/or flow): See page 2 of submittal package
-Structural calculations: NA
-List of product materials: See pages 23-45 of submittal package
-Evidence of stability and durability: See ADDENDUM A of submittal package
-Manufacturer's installation requirements: See page 11 of submittal package
-Operation and maintenance instructions: See page 12 of submittal package
-Any other information deemed necessary by the Director

Product submissions should be made by the product's manufacturer or an associated distributor. Products may be disapproved if the product is not in compliance or may not consistently function in compliance with the IDAPA 58.01.03 rules (IDAPA 58.01.03.009.04). Manufacturers or distributors will be notified in writing of product approval or disapproval. If a product is approved, the Director reserves the right to specify circumstances under which the component must be installed, used, operated, or maintained (IDAPA 58.01.03.009.03). Products approved for installation in subsurface sewage disposal systems are found in section 5.

I hope you find the enclosed information sufficient to approve Treit Inc filters for use in the State of Idaho. If you have any questions or need any further information please feel free to call or email.

Thank You,

Brian Iversen
Septic Filter Solutions, LLC
253 343 4848

PRODUCT SUBMITTAL PACKAGE			
SEPTIC FILTER SOLUTIONS, LLC			
Attn: Brian Iversen			
4014 RAY NASH DR NW GIG HARBOR WA 98335			
253 343 4848			
septicfiltersolutions.com			
PRODUCTS FOR REVIEW: EF-1830, EF-1840 , BAFFLE TEE, EF-2530, EF2540			
PAGE	**PRODUCT DATA**	**DWG #**	
1	Abstract	NA	
2	Information Sheet	INFO SHEET	
3	4 X 36 FILTER WITH CAP AND BAFFLE TUBE	EF 436C & BAFFLE	
4	4 X 36 FILTER WITH CAP	EF 436C	
5	4 X 36 FILTER	EF 436	
6	4 X 18 FILTER	EF 418	
7	4" BAFFLE TEE	4 in BAFFLE TEE	
8	In situ drawing	In Situ	
9	New and Existing System Installation	INSTALLATION FOR EF SERIES FILTERS	
10-11	Maintenance	MANTENANCE OF EF SERIES FILTERS	
12-21	Approval Letters	NA	
	MATERIAL	**MANUFACTURER**	**USE**
22	4" PVC ASTM D3034	JM EAGLE	INTERIOR SPLIT RING EF 2530 AND EF 1830
15-16	4" PVC ASTM D2729	JM EAGLE	INTERIOR SPLIT RING EF 2540 AND EF 1840
24	FITTINGS SPECIFICATIONS	GENOVA	FITTINGS
25	4" SDR 35 CAP	GENOVA	CAP
26	4" SDR 35 VENT TEE	GENOVA	BAFFLE TEE
27	4" SANITARY TEE	GENOVA	BAFFLE TEE
28-33	1/16" LD POLYETHYLENE MESH	NORPLEX	FILTER MESH
34	NYLON RIVET PL-250-10-10	RICHCO	HANDLE
35-42	12" x 3/4" x 1/16" NYLON STRAP	LAIRD PLASTICS	HANDLE
43-44	Performix F-799 clear	PLASTI DIP INC	GLUE

ADDENDUM A THRID PARTY TESTIMONIAL

Introduction

Septic Filter Solutions, LLC was formed in February 2017 by Father and Son team Bob and Brian Iversen. Our filters have been commercially available for over 20 years through 3rd party vendors. Septic Filter Solutions, LLC is registered with the Washington Department of Veteran Affairs as a Veteran Owned Business.

Products

We offer four standard models of effluent septic filters for residential and light commercial applications (See **TABLE 1**). Each of our filter models fits the standard septic tank 4" outlet pipe. We also fabricate 4" baffle tubes that are installed at the outlet pipe (See **FIGURE 2**). Our designs meet or exceed the industry standard of ANSI / NSF 46-2000.

TABLE 1

MODEL	DESCRIPTION	GPD*
EF 2540	4" X 36" FILTER WITH CAP	800
EF 2540 COMBO	4" X 36" FILTER AND BAFFLE	800
EF 2530	4" X 36" FILTER	800
EF 1830	4" X 18" FILTER WITH CAP	500
EF 1840	4" X 18" FILTER	500
BAFFLE TEE	4" TEE WITH 23" TUBE	NA

*Filtration Rate in gallons per day

FIGURE 1
EF-436C Effluent Filter

FIGURE 2
4" Baffle Tube

Septic Filter Solutions, LLC
4014 Ray Nash Dr NW
Gig Harbor, WA 98335
253 343 4848
septicfiltersolutions.com

Proudly Served Our Country
Now Proudly Serving Our Community
Veteran/Servicemember Owned Business
Registered with Washington Department of Veterans Affairs
www.dva.wa.gov

ON-SITE GRAVITY EFFLUENT FILTERS

-Designed to extend the life of drain fields
-Only require maintenance every 1-3 years depending on usage
-Unique design allows for double filtration
-Reduces the trapping of solids in the filter by allowing them to slough off and fall back into the tank for further digestion
-Expanded mesh neck design prevents float up and bypass eliminating the need for a gasket
-Our filters have been available nationally for over 20 years through third party vendors
-Flexible mesh allows for ease of installation in tight spaces

SPECIFICATIONS

-Mesh screen consisting of more than 5000 nominal 1/16” diameter openings
-Models EF-2530 and EF-2540 provide more than 60 square inches of infiltration area
-Models EF-1830 and EF-1840 provide more than 30 square inches of infiltration area
-Screen material low density polyethylene
-Each model fits the standard 4” baffle

APPROVALS

Washington State

-King County Department of Public Health
-Tacoma-Pierce County Health Department
-Snohomish Health District
-Bremerton-Kitsap County Health District

California

-County of Santa Clara Health Department
-County of Placer Health and Medical Services

North Carolina

-Department of Environmental & Natural Resources

Florida

-Department of Health

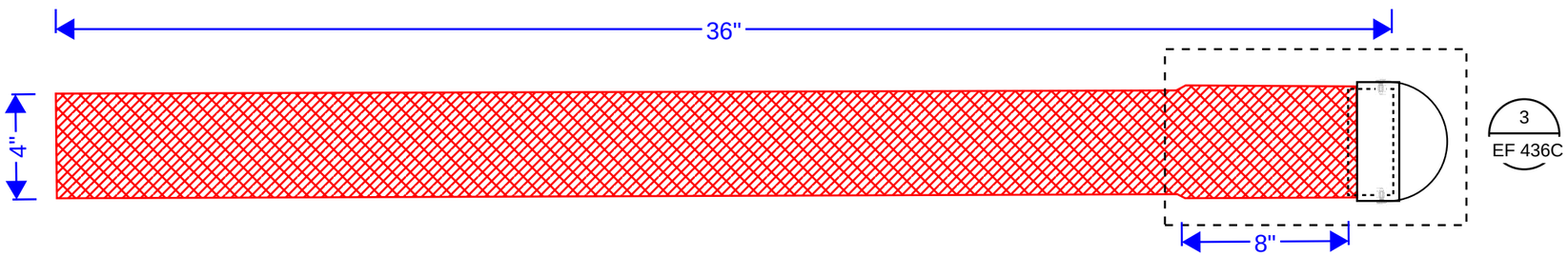

EFFLUENT FILTER W/ CAP 4" X 36" (1 / EF 436C)
SCALE: NTS

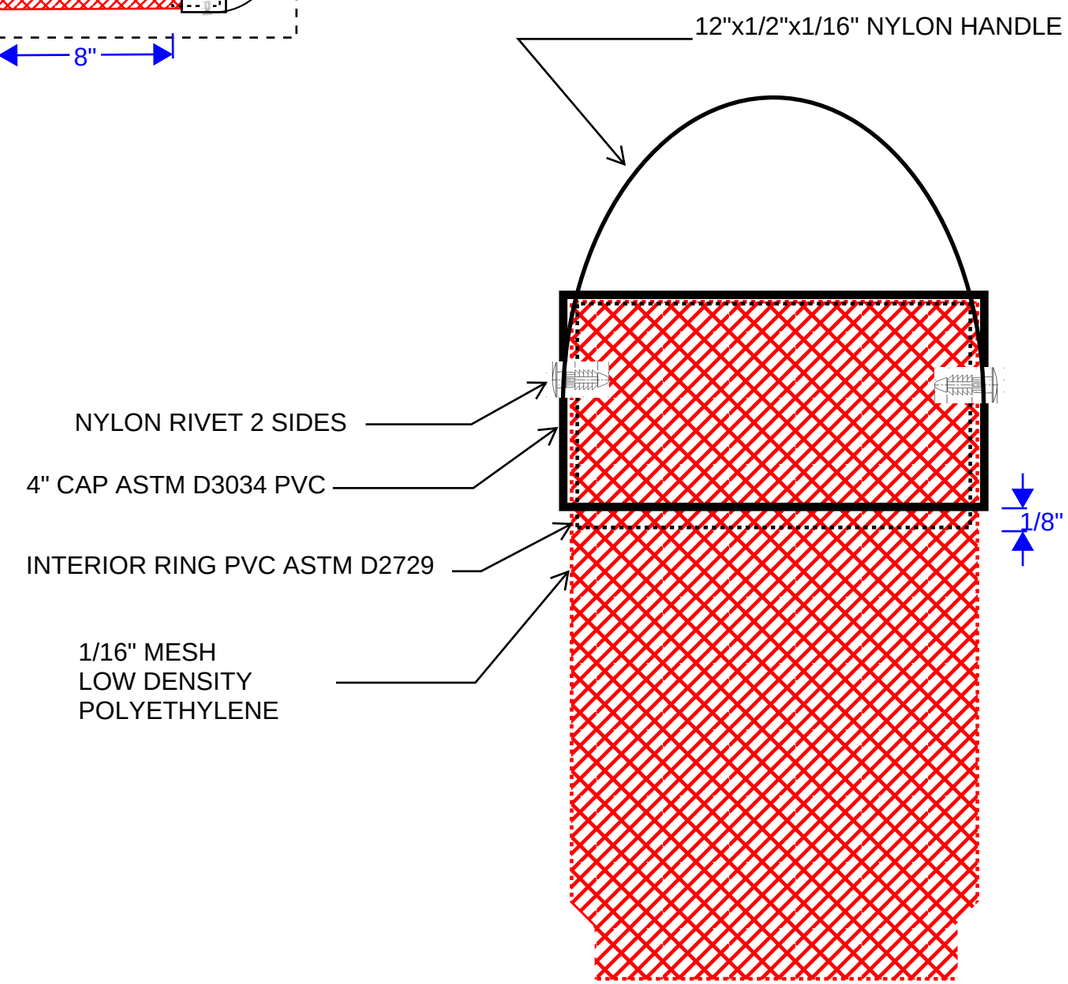

CAP DETAIL (3 / EF 436C)
SCALE: NTS

DATE: 2/26/2017	SEPTIC FILTER SOLUTIONS, LLC 4014 RAY NASH DR NW GIG HARBOR, WA 98335 253 343 4848	Treit, Inc MODEL EF-2540		DWG NO. EF 436C
DRAWN BY: HA				REV: 0 SHEET: 001
APRVD BY: RBI				SCALE: NTS
				FILE NAME: EF 436C

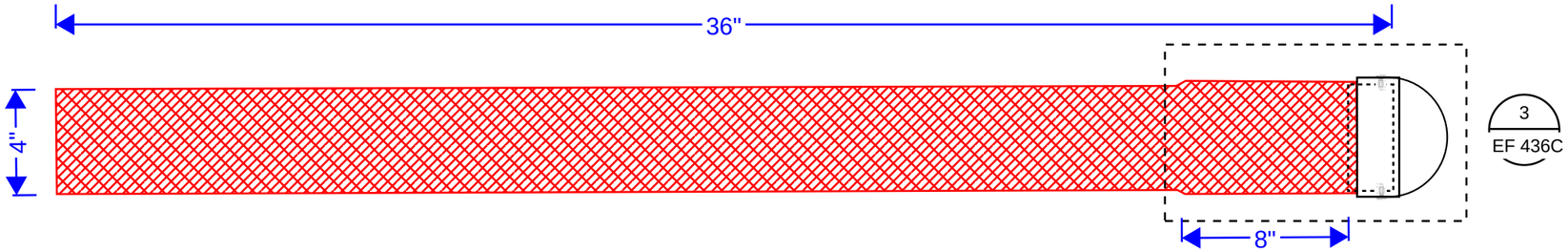

EFFLUENT FILTER W/ CAP 4" X 36" (1 / EF 436C)
SCALE: NTS

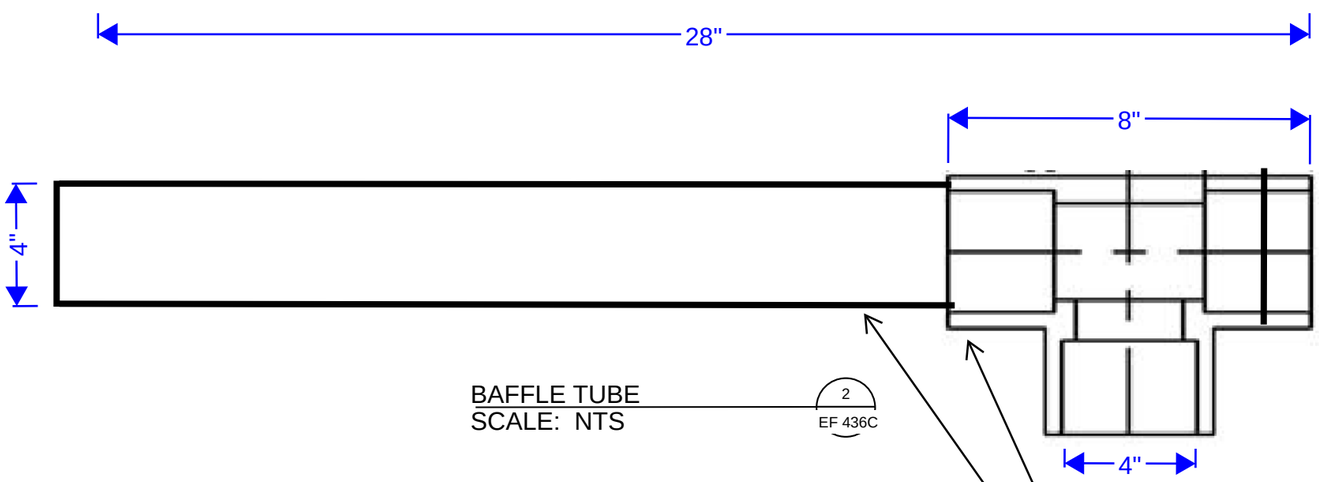

BAFFLE TUBE (2 / EF 436C)
SCALE: NTS

4" BULLNOSE OR SANITARY TEE ASTM D3034

4" PIPE PVC ASTM D2729

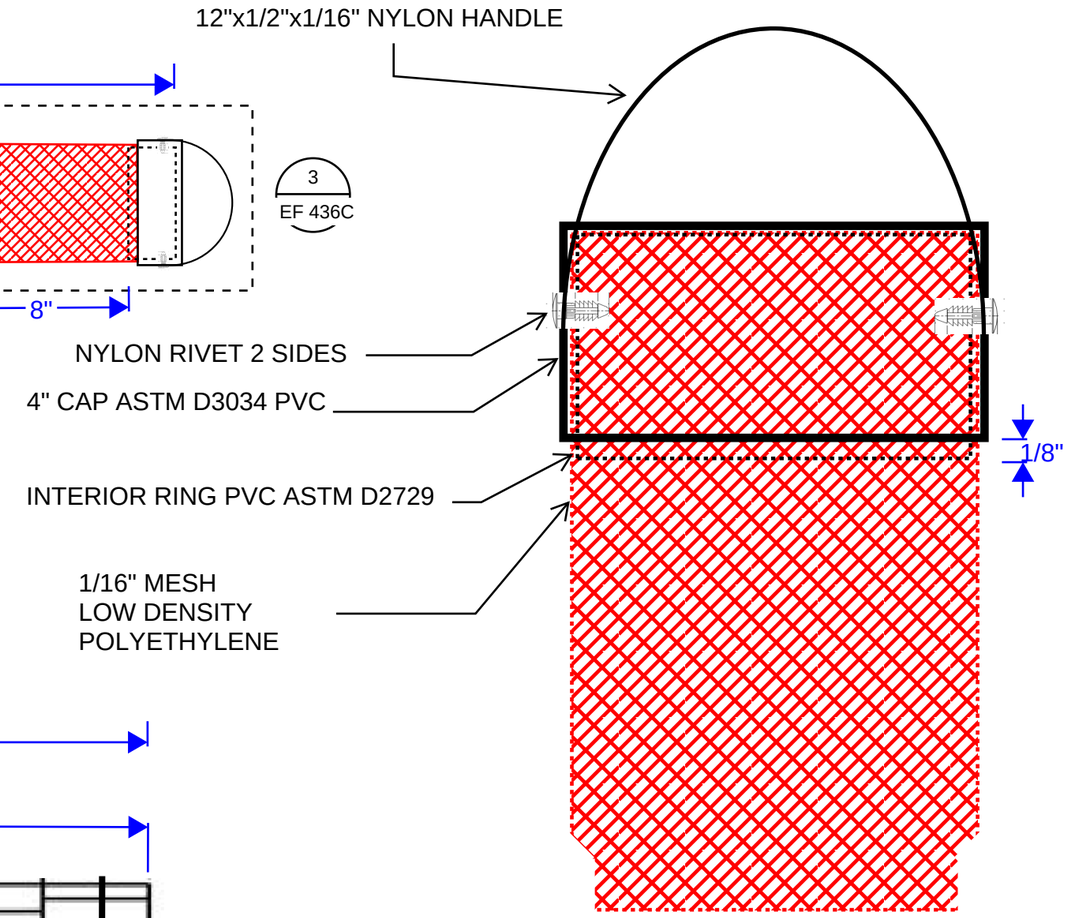

CAP DETAIL (3 / EF 436C)
SCALE: NTS

DATE: 2/26/2017	SEPTIC FILTER SOLUTIONS, LLC 4014 RAY NASH DR NW GIG HARBOR, WA 98335 253 343 4848	Treit, Inc MODEL EF-2540 WITH BAFFLE TEE		DWG NO. EF 436C COMBO
DRAWN BY: HA				REV: 0 SHEET: 001
APRVD BY: RBI				SCALE: NTS
				FILE NAME: EF 436 COMBO

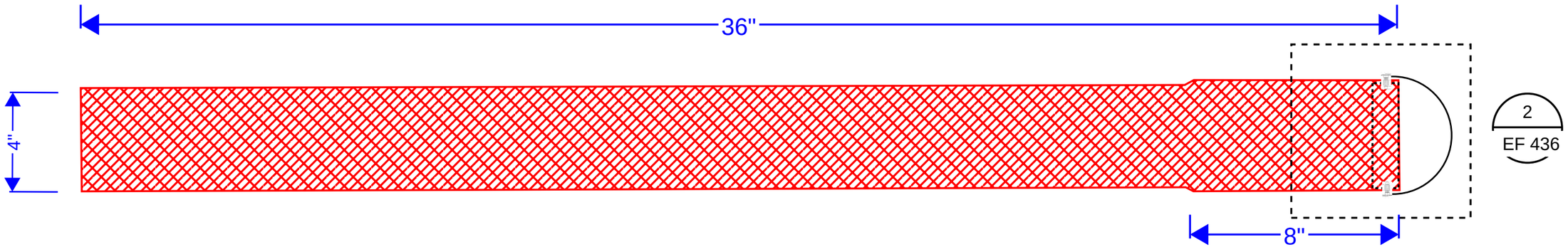

EFFLUENT FILTER 4" X 36"
SCALE: NTS
1
EF 436

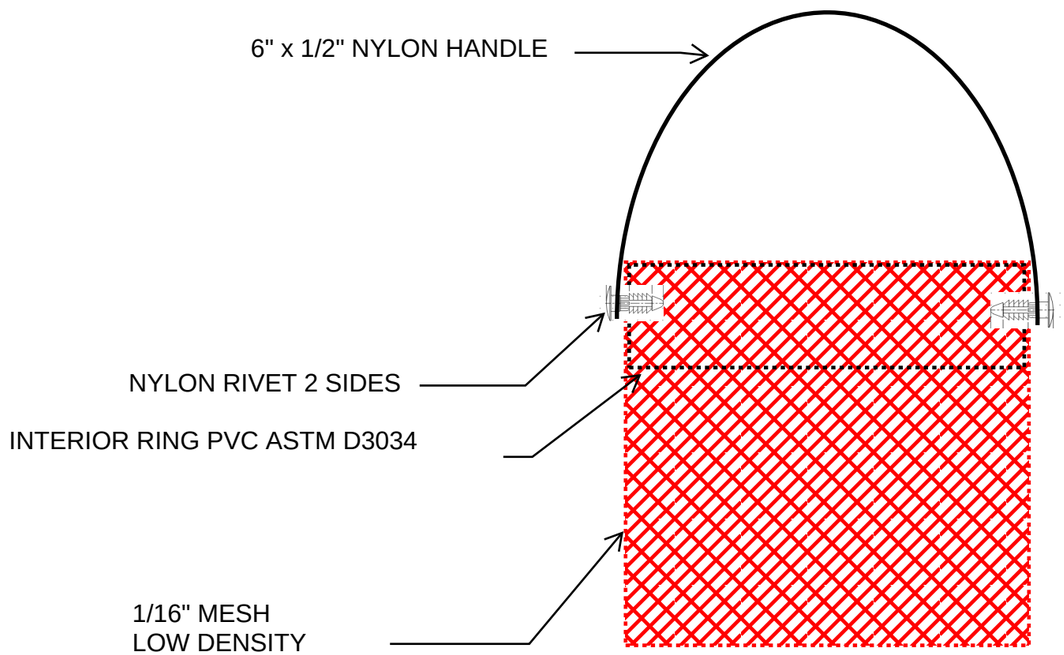

END DETAIL
SCALE: NTS
2
EF 436

DATE: 2/26/2017	SEPTIC FILTER SOLUTIONS, LLC 4014 RAY NASH DR NW GIG HARBOR, WA 98335 253 343 4848	Treit, Inc MODEL EF-2530		DWG NO.
DRAWN BY: HA				EF 436
APRVD BY: RBI				
				REV: A

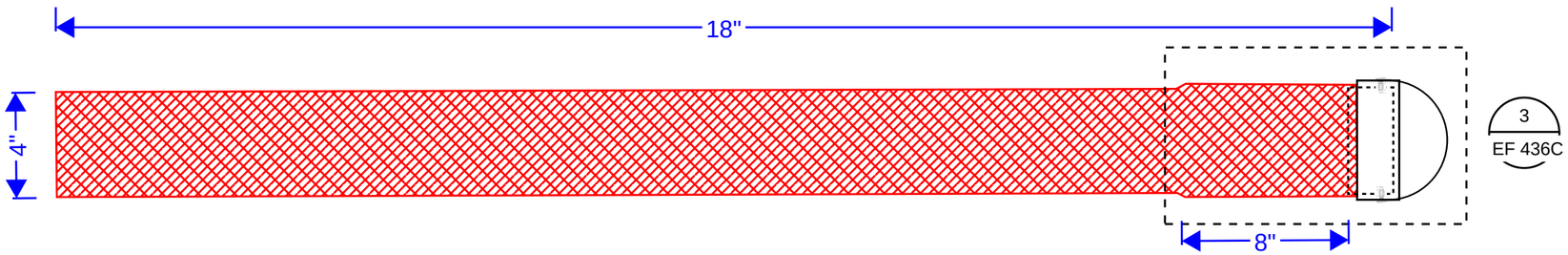

EFFLUENT FILTER W/ CAP 4" X 18" (1 / EF 436C)
SCALE: NTS

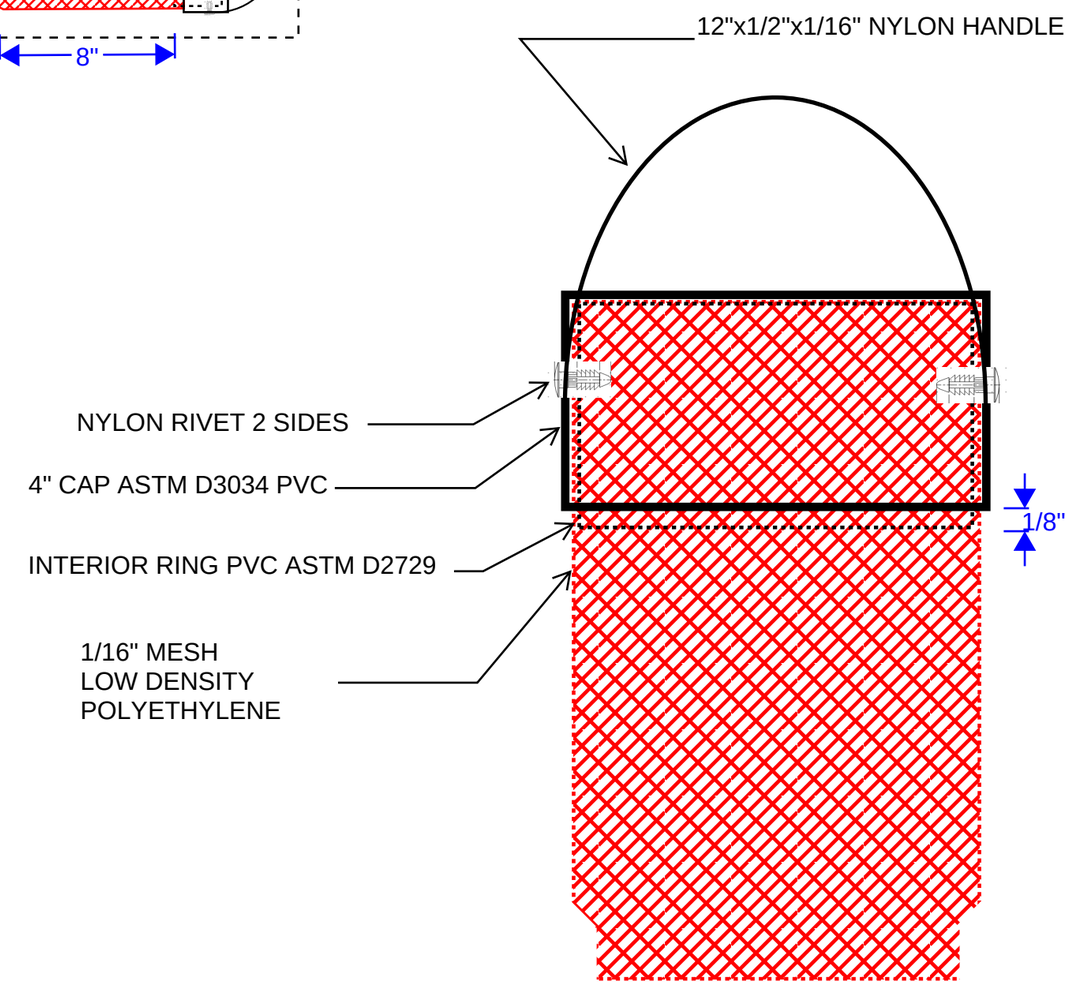

CAP DETAIL (3 / EF 436C)
SCALE: NTS

DATE: 2/26/2017	SEPTIC FILTER SOLUTIONS, LLC 4014 RAY NASH DR NW GIG HARBOR, WA 98335 253 343 4848	Treit, Inc MODEL EF-1840		DWG NO. EF 436C
DRAWN BY: HA				REV: 0 SHEET: 001
APRVD BY: RBI				SCALE: NTS
				FILE NAME: EF 436C

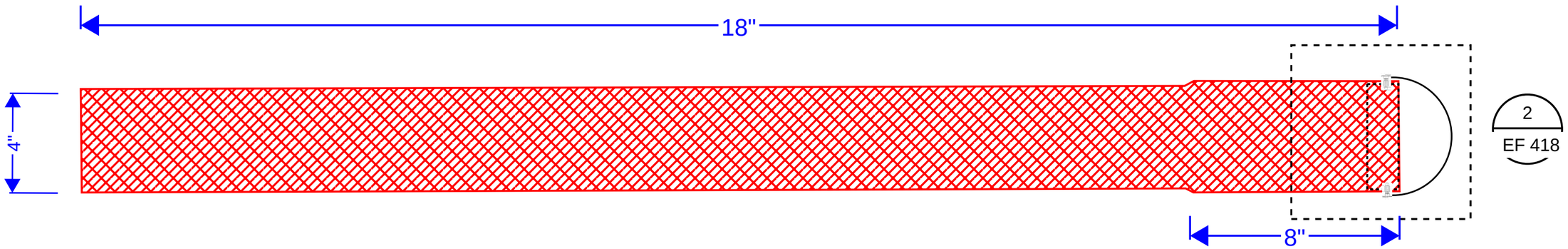

EFFLUENT FILTER 4" X 18"
SCALE: NTS
1
EF 418

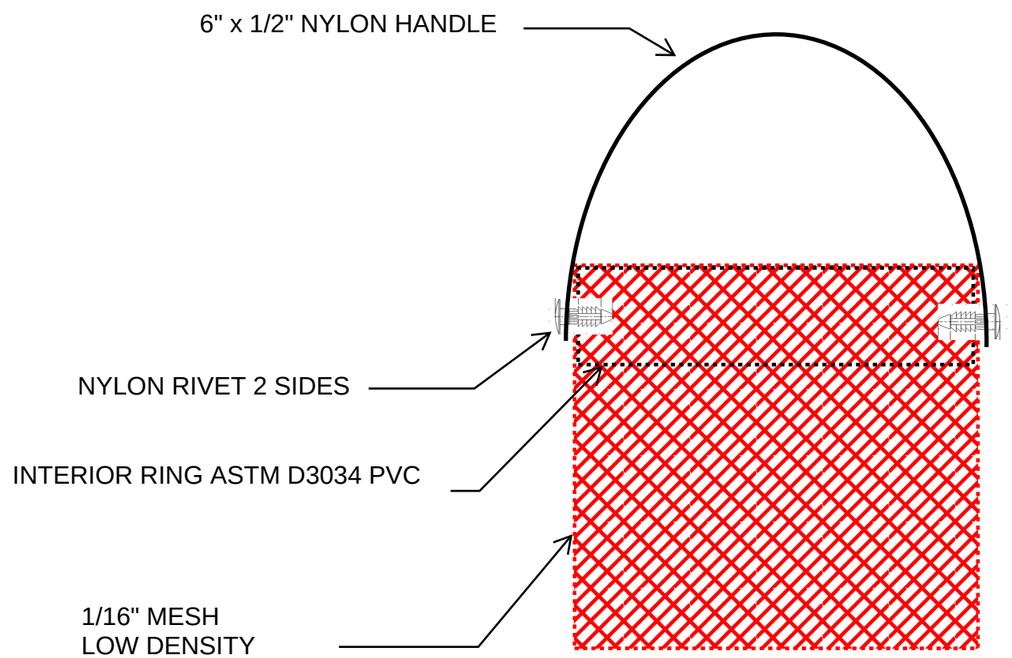

END DETAIL
SCALE: NTS
2
EF 418

DATE: 2/26/2017	SEPTIC FILTER SOLUTIONS, LLC 4014 RAY NASH DR NW GIG HARBOR, WA 98335 253 343 4848	Treit, Inc MODEL EF-1830		DWG NO.
DRAWN BY: HA				EF 418
APRVD BY: RBI				
				REV: A

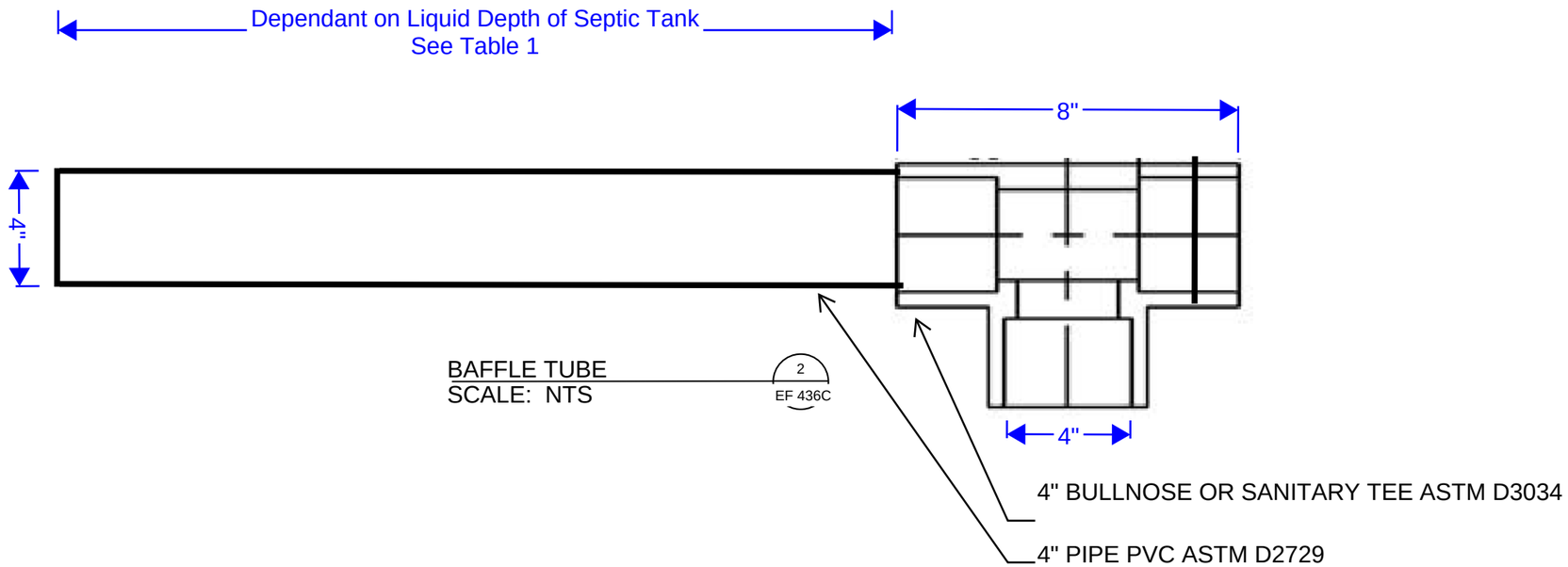

TABLE 1	
Liquid Depth of Septic Tank (in)	Baffle Length (in)
30-40	12
40-53	16
53-70	21
70-93	28

DATE: 2/26/2017	SEPTIC FILTER SOLUTIONS, LLC 4014 RAY NASH DR NW GIG HARBOR, WA 98335 253 343 4848			DWG NO. 4" BAFFLE
DRAWN BY: HA				REV: 0 SHEET: 001
APRVD BY: RBI				SCALE: NTS
				FILE NAME: 4 in BAFFLE TEE

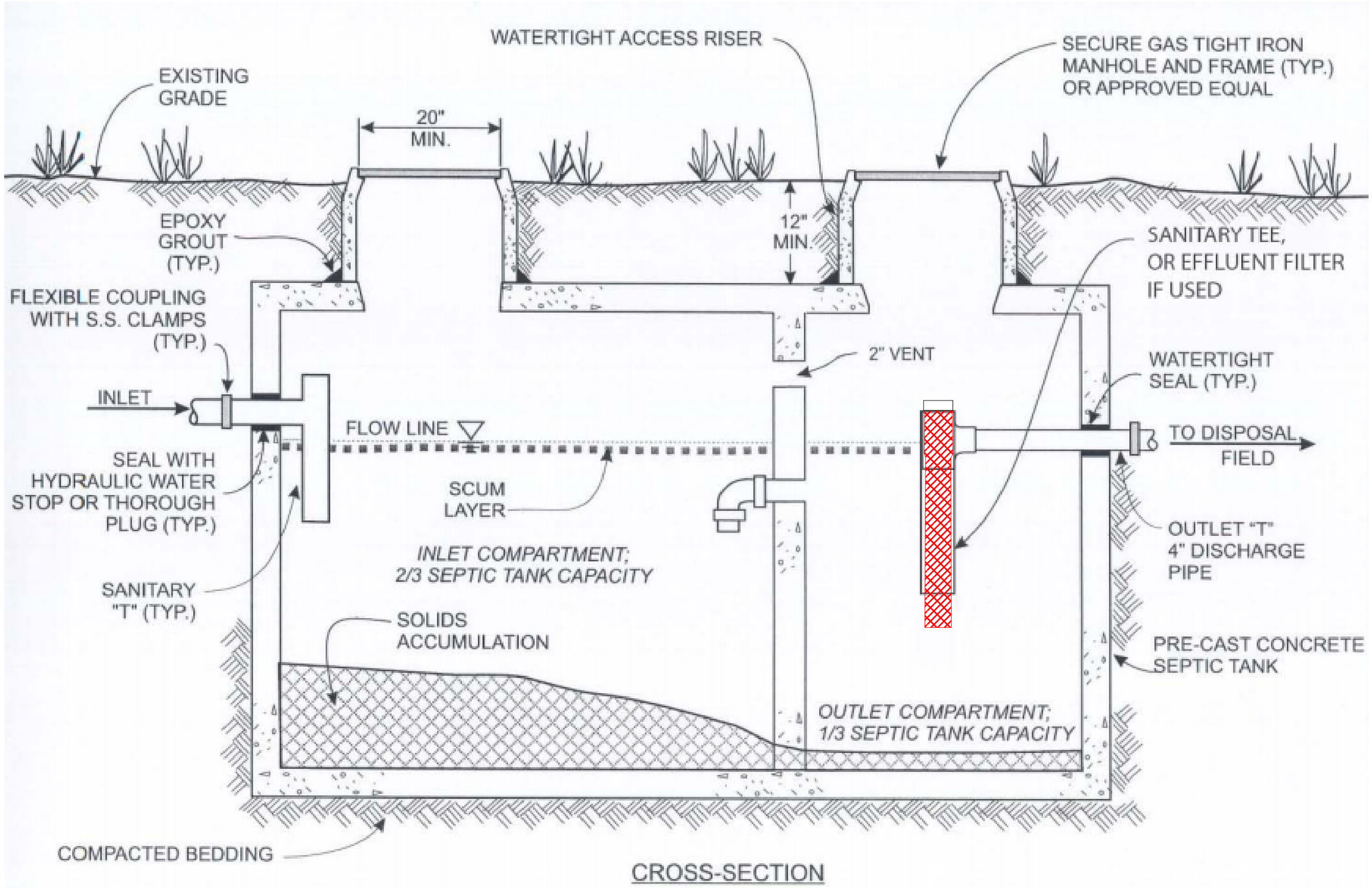

CROSS-SECTION

DATE: 2/26/2017	SEPTIC FILTER SOLUTIONS, LLC	SEPTIC TANK WITH OUTLET COMPARTMENT INSTALLATION		DWG NO.
DRAWN BY: HA	4014 RAY NASH DR NW GIG HARBOR, WA 98335 253 343 4848			In Situ
APRVD BY: RBI				
				REV: A

Installation of EF Series Filters
For use with Models EF 1830, 1840, 2530, 2540

Proudly Served Our Country
Now Proudly Serving Our Community
Veteran/Servicemember Owned Business
Registered with Washington Department of Veterans Affairs
www.dva.wa.gov

New System Installation

STEP 1
Locate outlet of septic tank.

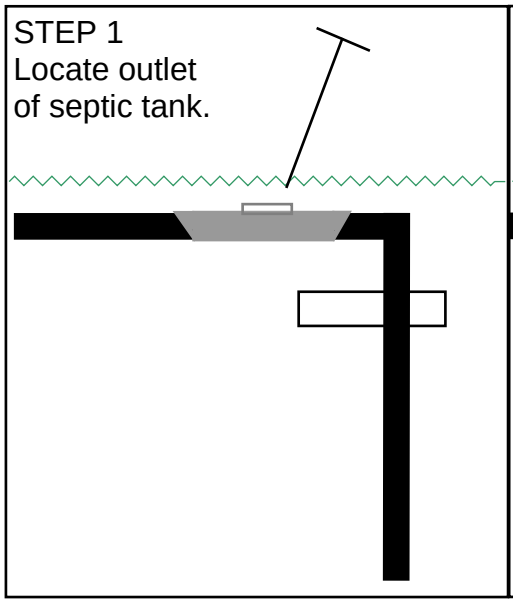

STEP 2
Remove tank cover.
Solvent weld outlet baffle tee to the septic tank outlet pipe.

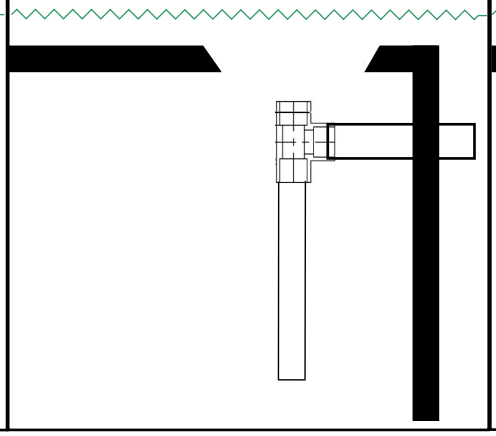

STEP 3
Insert EF Filter into 4" baffle tee.
Replace septic tank cover.

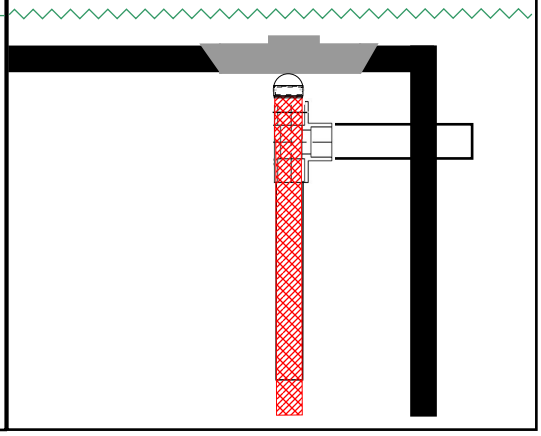

Existing System Installation

STEP 1
Locate outlet of septic tank

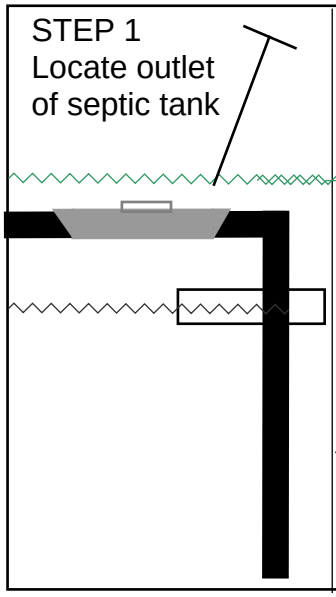

STEP 2
Remove tank cover and pump tank if needed to prevent any solids from draining into field.

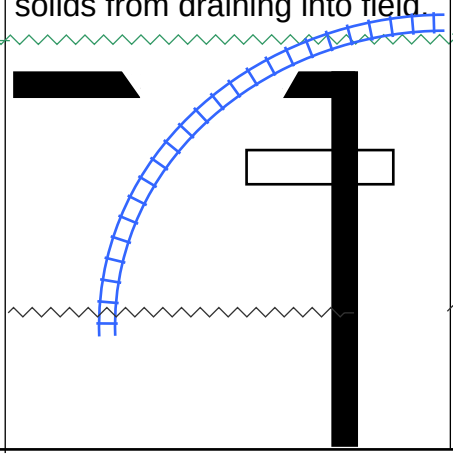

STEP 3
Solvent weld outlet baffle tee to the septic tank outlet pipe, ensuring that the tee is centered on opening.

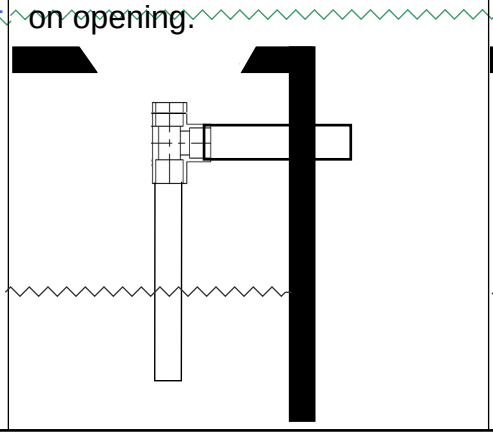

STEP 3
Insert EF Filter into 4" baffle tee.
Replace septic tank cover.

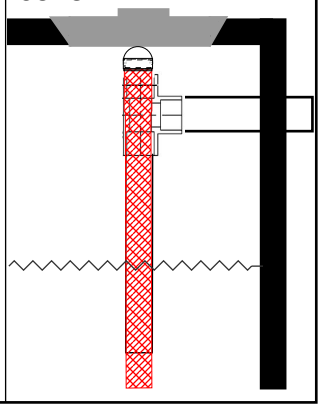

Maintenance of EF Series Filters
For use with Models EF 1830, 1840, 2530, 2540

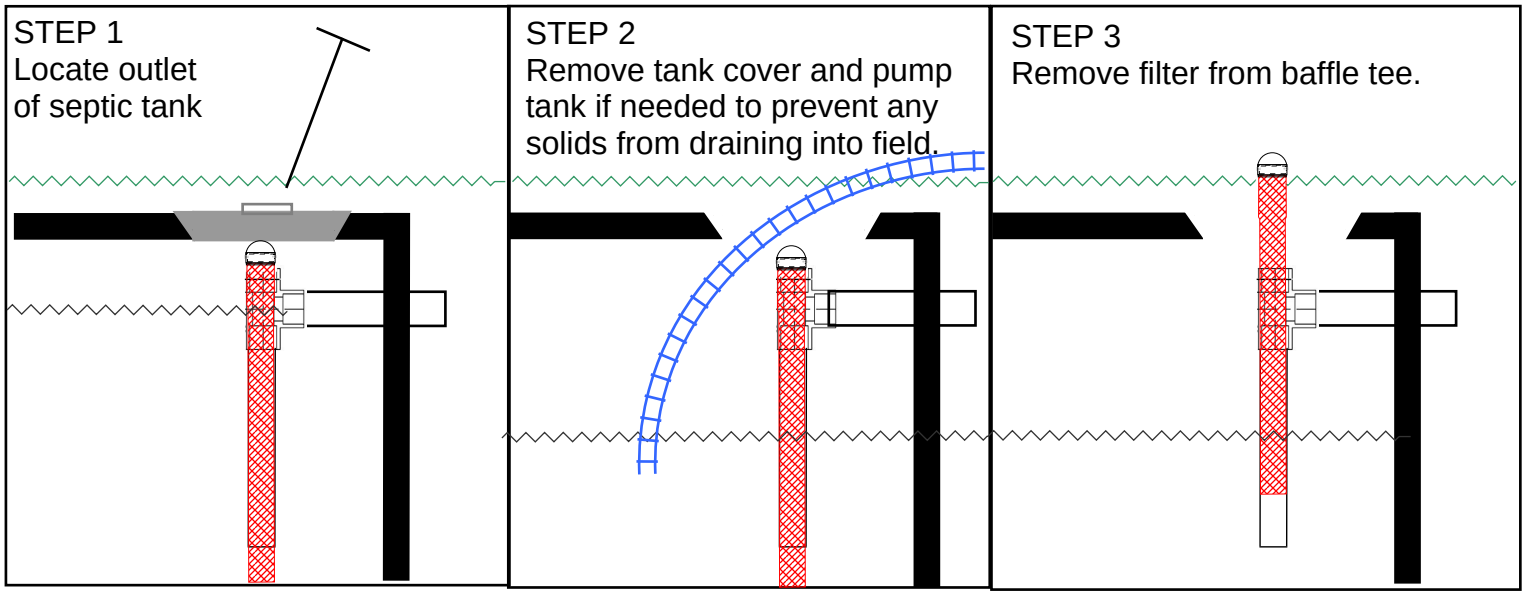

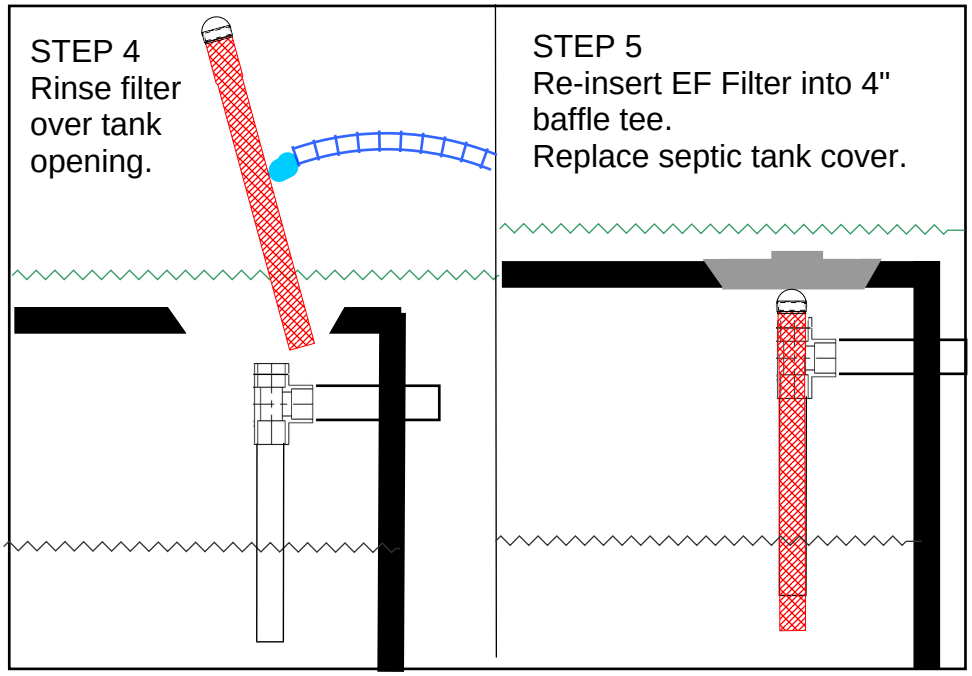

State of Florida
Department of Health
Approved Outlet Filter Devices, Florida Administrative Code 64E-6.008(2)
Approved Solids Deflection Devices, Florida Administrative Code 64E-6.013(2)(e)
sorted by Manufacturers

as of October 19, 2017 (last reviewed on October 19, 2017)

TREIT FILTERS COMPANY
Mr. Michael A Treit, CEO
3404 57th St. NW
Suite A
Gig Harbor, Washington 98335
Phone (253) 853-5340
Fax (253) 853-4224

Products: Model EF-1830
Model EF-1840
Model EF-2530
Model EF-2540

City of Seattle
Norman B. Rice, *Mayor*

King County
Tim Hill, *Executive*

Seattle-King County Department of Public Health

Bud Nicola, M.D., M.H.S.A., *Director*

June 6, 1990

Mike Treit
Treit Equipment Company
240 Shorewood Court
Fox Island, WA 98333

Re: Screened outlet baffle model EFB-1 manufactured by The Treit Company

Dear Mr. Treit:

The Seattle-King County Department of Public Health has reviewed the attached documents submitted by your firm on May 14, 1990 and June 5, 1990 and find that the outlet baffle design detailed in these documents meets all minimum criteria specified by the "Guidelines for the Use of Pressure Distribution - Addendum" approved May 31, 1989 by the Washington State Department of Health On-Site Technical Review Committee. These guidelines have been adopted for use by King County as regulations governing the design of on-site sewage disposal systems using pressure distribution (see Title 13 of the Code of the King County Board of Health, Section 13.52.040). Therefore, we approve of the use of this device in King County under the following conditions:

1. That the construction of the device conforms to the design and specifications attached, except that increase in the diameter of the device is allowed and encouraged if the intake area is proportionately increased.

2. That periodic renewal of this approval may be required and approval of this device may be withdrawn at any time in response to new information, and

3. That an appropriate review fee may be collected prior to consideration of renewal of approval.

If you have questions concerning this matter, please feel free to contact Gordon Clemans at 296-4832.

Sincerely,

James Henriksen, Supervisor
Wastewater Program

JH:gcm

cc: District Supervisors

/wpfiles

Tacoma-Pierce County Health Department

Alfred M. Allen, M.D., M.P.H.
Director of Health

BOARD MEMBERS
• JOE STORTINI—Pierce County Executive
• KAREN VIALLE—Tacoma Mayor
• BARBARA SKINNER—Pierce County Councilmember
• GREG MYKLAND—Tacoma Councilmember
• M. JAMES WICKS, M.D.—Member-at-Large
• ALAN NYGAARD—Ex-officio Member, Sumner City Administrator
Representing Pierce County Cities & Towns Association

April 24, 1990

Mike Treit
Treit Equipment Company
240 Shorewood Court
Fox Island, Washington 98333

Dear Mr. Treit:

The Tacoma-Pierce County Health Department has reviewed your screened baffle and finds that it meets all the requirements as established by the Washington State On-site Technical Review Committee. We, therefore, are in agreement that it is APPROVED as an alternative device that can be used in Pierce County.

This letter is not meant to be used as an endorsement of this product but only as an acknowledgement of the products' acceptability in the design and construction of septic systems.

Thank you for your efforts in providing alternative methods of dealing with septic system disposal.

Sincerely,

Richard Pedlar

Richard Pedlar, R.S.
Section Manager
On-Site Sewage Section
Environmental Health Division

RP:rrb

SNOHOMISH HEALTH DISTRICT

Serving the Public Health of Snohomish County and its Incorporated Cities and Towns

M. WARD HINDS, M.D., M.P.H.
Health Officer

Vital Statistics	(206) 339-5280	Administration Office	(206) 339-5210
Clinic Service	(206) 339-5220	Community Health Division	(206) 339-5230
Sanitation Program	(206) 339-5270	Environmental Health Division	(206) 339-5250

FAX (206) 339-5216

une 10, 1991

Mike Treit
Treit Equipment Company
240 Shorewood Court
Fox Island, Washington 98333

Dear Mr. Treit:

Snohomish Health District has reviewed your screened baffle and finds that it meets the requirements as established by the Washington State On-site Technical Review Committee. We, therefore, are in agreement that it is APPROVED as an alternative device that can be used in Snohomish County under the following conditions:

1. That the use and construction of the device conforms to the design and specifications attached to your letter of April 24, 1991 (DWG NO. TEC-00001-01).

2. That periodic renewal of this approval may be required and approval of this device may be withdrawn at any time in response to new information.

The Snohomish Health District will monitor the use of the screened baffle. Of particular concern is accessibility of the filter for cleaning inasmuch as the cap screw may be below the scum layer and, if the tank isn't pumped before removing the baffle, the scum layer may float into the drainfield or pump chamber. Additionally, the Snohomish Health District is concerned that the unknowing homeowner may remove the screen for cleaning and choose not to replace if which will result in an unprotected sewage treatment and disposal system. I would encourage you to consider a design that would allow cleaning the screen without removal of the tank baffle.

If you have any questions please contact me at 339-5270.

Sincerely,

Randal S. Darst, R.S., Supervisor
Water and Wastewater Section
Environmental Health Division

cc: Technical Staff, SHD

BREMERTON-KITSAP COUNTY HEALTH DISTRICT

WILLA A. FISHER, MD., MPH., DIRECTOR
109 Austin Drive
Bremerton, Washington 98312
Environmental Health Division
(360) 478-5285 FAX 478-2091

February 14, 1996

Michael A. Treit, Owner
Treit Equipment Co.
240 Shorewood Ct.
Fox Island, WA 98333

RE: ACCEPTANCE OF TREIT FILTER MODEL EF-1000

Dear Mr.Treit,

In reviewing your letter and the specifications that I requested, it is agreed that Model EF-1000 meets the State DOH guideline requirements and is therefore accepted for sale and distribution in Kitsap County.

I found your presentation quite informative and would like to invite you to present it at one of our regularly scheduled Technical Advisory Committee meetings. These meetings are held on the 2nd Wednesday of the month at 2:00pm and are attended by at least 25 or more individuals representing installers, designers and maintenance professionals.

As for your topic of discussion, you could present the history of the filter and examples of the different models and also discuss why you feel you have a superior product over the other filters on the market. We could allow you 20 minutes for this presentation.

Please contact me at 360-478-5285 if you would be interested in this presentation.

Sincerely,

David G. Snyder, R.S.
On-Site Sewage Program Manager
Environmental Health Department

County of Santa Clara
Health Department

2220 Moorpark Avenue
San Jose, California 95128

September 27, 1991

Treit Equipment Company
240 Shorewood Court
Fox Island, WA 98333

Attention: Michael A. Treit

SUBJECT: EFFLUENT FILTER BAFFLE

The Treit Effluent Filter submitted to Santa Clara Environmental Health Services for consideration has been approved. The filter will not be required on septic tanks, they will, however, be approved for installation on existing and new septic tanks.

Please provide a drawing showing specifications for materials and dimensional information for the upgraded filter. We offer the suggestion that the filter cap be provided with a handle and rod to facilitate removal when maintenance is required.

For your information, I am including a list of contractors certified to install septic systems in Santa Clara County and a Bulletin A which outlines installation requirements. If I may be of further assistance, please feel free to contact me at Environmental Health Services, 2220 Moorpark Avenue, San Jose CA 95128, phone (408) 299-6060.

Linda Crawford

LINDA CRAWFORD
SENIOR ENVIRONMENTAL HEALTH SPECIALIST
ENVIRONMENTAL HEALTH SERVICES

LC:rc
ld:lc:letr

Michael M. Honda, Zoe Lofgren, Ron Gonzales, Rod Diridon, Dianne McKenna

COUNTY OF PLACER
DEPARTMENT OF HEALTH
AND
MEDICAL SERVICES

DIVISION OF ENVIRONMENTAL HEALTH
11454 B AVENUE, AUBURN, CALIFORNIA 95603
(916) 889-7335
FAX: (916) 889-7370

FRED I. JOHNSON
DIRECTOR OF HEALTH SERVICES

RICHARD H. SWENSON, R.E.H.S.
DIRECTOR

August 25, 1992

Mr. Michael A. Treit
240 Shorewood Court
Fox Island, WA 98333

Re: Treit Septic Tank Filters

Dear Mr. Treit:

We have reviewed literature and brochures submitted on your line of products.

At this time we would approve the use of the EFB-3B. We feel that this product would perform the best due to the amount of filter area exposed.

We would only allow the installation of these units in two-compartment septic tanks fitted with watertight risers to the ground surface. Retrofitting these units into septic tanks after they have been pumped would not be recommended unless access risers could also be retrofitted.

At the present time we cannot allow your unit to be used in lieu of a pump screen on "enhanced systems".

Please find enclosed lists of septic tank pumpers, installers and designers as per your request.

Thank you for providing a sample of your product and the supportive literature. It is our opinion that the concepts behind your product design are sound and may benefit septic system users in Placer County as a drainfield protection devise.

Please contact this office should you have any further questions.

Sincerely,

RJ Patterson

Robert J. Patterson, R.E.H.S.
Supervisor, Land Development Section

RJP/mlt
cc: Land Dev. staff
file

NORTH CAROLINA DEPARTMENT OF ENVIRONMENT,
HEALTH AND NATURAL RESOURCES
DIVISION OF ENVIRONMENTAL HEALTH
ON-SITE WASTEWATER SECTION

SEPTIC TANK EFFLUENT FILTER APPROVAL

SEPTIC TANK EFFLUENT FILTER NO: EF-16

ISSUED TO: Michael A. Treit
Treit Equipment Company
d/b/a Treit Products, Inc.
3404 57th St. NW, Suite A
Gig Harbor, WA 98335
(253)853-5340; (877)SAFE-TANK (723-3826); (253)853-4224 (Fax);

FOR: Treit Septic Tank Effluent Filter Model No. EF-2540

DATE: August 23, 1999

In accordance with North Carolina General Statute 130A-335, 130A-335.1, and 15A NCAC 18A .1954, an application by Michael A Treit of Treit Equipment Company d/b/a Treit Products, Inc. for approval of septic tank effluent filters has been reviewed and the above referenced filter model has been found to meet the requirements established by statute and rule for approved effluent filters, when the following conditions for use, installation, operation and maintenance are met:

I. Description:

a. Filter shall be designed and manufactured in accordance with plans, specifications and supporting documents provided by the manufacturer in their application for approval submitted to the On-Site Wastewater Section. The On-Site Wastewater Section shall be notified in writing of any additions or modification to the approved filter models prior to use in septic tank systems.

b. Filters shall meet the following specifications (see Table 1):

Table 1. Approved Filter Model Specifications (Treit)						
Filter Model	Size	Support Case[1]	Case Dimensions		Min. Tank Liquid Depth Required[2]	Min. Access Opening Size[3]
			Above Liquid Level	Below Liquid Level		
EF-2540	4" dia. x 25"	4" PVC Tee with 17" base extension	7"	17"	42.5"	15 x 15 in. or 17 in. dia. or equal

Notes:

1. PVC Tee for Support case provided by filter manufacturer (Treit) of manufacturer designated supplier. Septic Tank manufacturer shall provide support case base extension using 4-inch Schedule 40 PVC pipe.

2. Minimum septic tank liquid depth required to meet 25% to 40% inlet intake requirement for filter support case.

3. Other minimum opening sizes or configurations proposed by the septic tank manufacturer shall be approved by the State on a case-by-case basis if documentation is provided showing both adequate access is provided for filter maintenance and for pumping the tank outlet compartment.

---

c. This approval shall be amended to incorporate additional filter models when they are found to meet the requirements of GS 130A-335, 130A-335.1, and other applicable rules.

II. Use:

A septic tank manufacturer may use one or more of these approved effluent filters in one or more of their septic tanks. The septic tank manufacturer must notify the On-Site Wastewater Section in accordance with Rule .1953 of the tanks in which they propose to utilize any of these approved filters, showing any modifications to the approved tank plans which may be necessary to utilize the proposed filter.

III. Sizing:

Approved filter models may be used in systems that meet the capacities and wastewater characteristic limitations stated in the following table, in accordance with manufacturer's specifications:

Table 2. Filter Sizing Criteria (Treit)

Filter Model	Maximum Design Flow for a Single Dwelling Unit (gpd)[1]	Maximum Design Flow for Other Than a Single Dwelling Unit (gpd)[2]	
		BOD 300-600 mg/l	BOD 600-1000 mg/l[4]
EF-2540	750	300	175

Notes:

1. For residential flows **without garbage disposals.** Design Flows based upon primary sewage effluent from septic tank (without filter installed) with contaminant concentrations or quantities which do not exceed those normally found in residential sewage, including:
   BOD_5 ☐ 300 mg/l; TSS ☐ 150 mg/l; TKN ☐ 150 mg/l; Oil & Grease ☐ 25 mg/l

2. For use in systems with higher strength wastewater, three-year minimum maintenance interval is unrealistic to expect without advanced pretreatment in addition to grease traps.

The filter sizing must be compatible with tank sizing requirements established based upon Rules .1949 and .1952(d). Both the maximum filter design flow and the maximum tank design flow must be equal to or greater than the maximum design flow rate for the system.

IV. Installation:

The effluent filters and filter support cases shall be assembled and installed in accordance with filter manufacturer's specifications and applicable rules. The filter case shall be located in such a manner that the filter can be readily accessible by the operator beneath the access manhole opening and removable by hand from above finished grade, while also providing enough room to allow for pumping of the tank outlet compartment.

V. Operation and maintenance:

The effluent filters shall be used and maintained in accordance with filter manufacturer's specifications and applicable laws and rules. Manufacturer-specified procedures shall be followed to minimize the bypass of unfiltered effluent while the filter is being serviced. Debris washed off the filter during servicing must be returned to the septic tank, or otherwise handled in accordance with an alternate approved sanitary disposal method.

VI. Literature:

The filter manufacturer shall furnish with each filter:

-Literature to be provided by the tank manufacturer to the system installer describing installation procedures.

-Literature to be provided by the installer to the system owner/user describing filter and recommended maintenance and servicing procedures.

VIII. Maintaining approval status:

The approval status is governed by Rule .1954(e).

Approved by:_____Date:_____

Building essentials for a better tomorrow™

SOLVENT WELD
SEWER AND DRAIN

MEETS ASTM D3034 AND D2729.

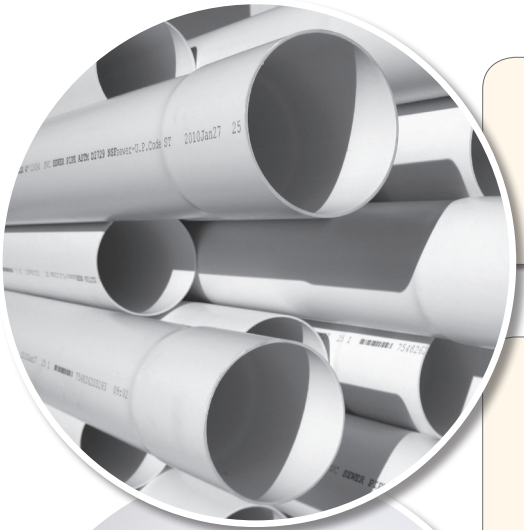

APPLICATIONS

JM Eagle Solvent Weld sewer and drain pipes are suitable for use in sewer and landscape drainage applications.

DESCRIPTION

JM Eagle's makes PVC ASTM D3034 SDR 35 sewer pipe in 10- and 20-foot lengths, bell end, in 3-, 4- and 6-inch diameters, and PVC ASTM D2729 drain pipe in 10-foot lengths, bell end, in 3-, 4- and 6-inch diameters.

They are available perforated and non-perforated.

Solvent Weld joints are designed to provide a rigid (or restrained) joint connection, and the schedule-rated products are specifically engineered for use in partial support systems above ground.

BENEFITS

JM Eagle Solvent Weld sewer and drain pipe is cost-effective and long-lasting.

- It can be field-cut with a power saw or ordinary handsaw without the use of expensive or complicated machinery.
- Easy to load, transport and handle, installers prefer it because it goes into the ground quickly, saving installation costs.
- It maintains performance against tuberculation, corrosion and external galvanic soil conditions without lining wrapping, coating or cathodic protection.
- It keeps its smooth interior over long years of service with virtually no loss in carrying capacity.
- A cured joint of JM Eagle Solvent Weld schedule series pipe offers a zero-leak joint that is structurally sound.

Revised 11/1/2010. This information may have been updated. Please download the latest version at www.jmeagle.com/onesheets.

SOLVENT WELD
SEWER AND DRAIN
SUBMITTAL AND DATA SHEET

JM Eagle™
Building essentials for a better tomorrow™

JM EAGLE™ PVC ASTM D3034 SOLVENT WELD SDR35 SEWER PIPE

JM EAGLE™ SOLVENT WELD SEWER PIPE CONFORMS TO SPECIFICATIONS PRIOR TO PERFORATION AND CELL CLASS 12454 OR 12364 AS DEFINED IN ASTM D1784 : :

EXTERIOR RING EF 1830, 2530

NOM. PIPE SIZE (IN)	O.D. (IN)	NOM. I.D. (IN)	MIN T. (IN)	APPROX. WEIGHT (LBS/FT)
3" x 10' Solid & Perf	3.250	3.064	0.093	0.614
4" x 10' Solid & Perf	4.215	3.961	0.120	1.022
6" x 10' Solid & Perf	6.275	5.893	0.180	2.285

: : Standard length: 10' or 20' Overall, Belled End Only.
: : Standard perforations for pipe are two rows of holes ½" in diameter on 5" centers and 120° angle a
Perforated pipe does not have ASTM designation on print line.

When using JM Eagle™ PVC ASTM D3034 Solvent Weld Sewer Pipe for septic tank fields, please install in accordance with ASTM D2321, and JM Eagle™ Publication JME-05B, "Gravity Sewer Installation Guide."

JM EAGLE™ PVC ASTM D2729 SOLVENT WELD DRAIN PIPE

JM EAGLE™ SOLVENT WELD DRAIN PIPE CONFORMS TO SPECIFICATIONS AND CELL CLASS 12454 OR 12164 AS DEFINED IN ASTM D1784

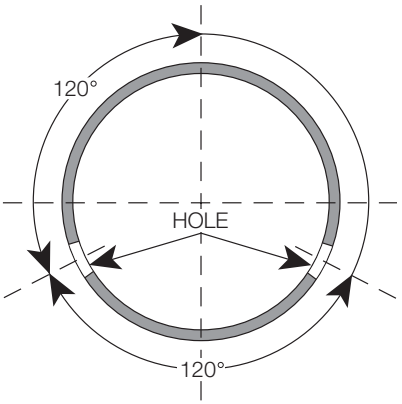

NOM. PIPE SIZE (IN)	O.D. (IN)	NOM. I.D. (IN)	MIN T. (IN)	APPROX. WEIGHT (LBS/FT)
3" Solid & Perf	3.250	3.102	0.070	0.465
4" Solid & Perf	4.215	4.056	0.075	0.648
6" Solid & Perf	6.275	6.063	0.100	1.300

: : Standard Color: White, Standard length: 10' Overall, Belled End Only.
: : Standard perforations for pipe are two rows of holes ½" in diameter on 5" centers and 120° angle apart.
Three perforation rows may be available.

When using JM Eagle™ PVC ASTM D2729 Solvent Weld Drain Pipe for septic tank fields, please install in accordance with ASTM F481, and JM Eagle™ Publication JME-05B, "Gravity Sewer Installation Guide."

* Prior to ordering or specifying, please consult JM Eagle™ for product and /or listing availability.
I.D. : Inside Diameter
O.D. : Outside Diameter
T. : Wall Thickness

INTERIOR SPLIT RING EF 1840, 2540, and BAFFLE TUBE

Revised 11/1/2010. This information may have been updated. Please download the latest version at www.jmeagle.com/onesheets.

Genova

CAPS AND TEES

PVC SEWER PIPE & FITTINGS

P 800-521-7488
F 810-744-1653

Genova Products, Inc. World Headquarters
7034 E Court St
Box 309
Davison, MI 48423-0309

Solid & Perforated PVC Sewer Pipe:

- 3" & 4" meet ASTM D2729
- 4" & 6" SDR 35 meet ASTM D3034
- Pipe measures 10' before belling

PVC Sewer Fittings:

- 3" meets ASTM D2949 or exceeds ASTM D2729
- 4" & 6" meet ASTM D3034

Styrene Sewer Fittings:

- Meets ASTM D2852

Corrugated Sewer Fitting:

- Meets ASTM F405

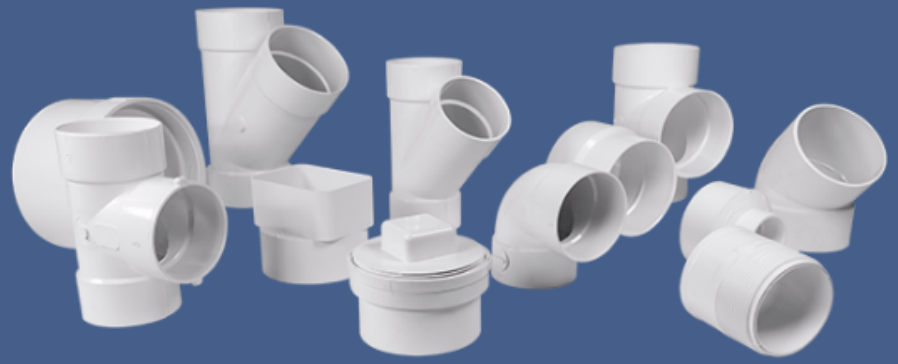

Sewer & Drain fittings are used for sewer lines, septic tank seepage systems, and perimeter drains.

- Sewer pipe sizes are sometimes referred to as PSM (Plastic Sewer Main).
- Solvent weld joints on PVC and Styrene fittings.
- HDPE corrugated fittings snap together. Use with HDPE corrugated pipe.

Genova

PVC SEWER PIPE & FITTINGS

P 800-521-7488
F 810-744-1653

Genova Products, Inc. World Headquarters
7034 E Court St
Box 309
Davison, MI 48423-0309

4" HUB PVC CAP

SPECIFICATIONS

| **Mfr #:** 40154

Color: White	**Fitting Connection Type**: Hub
Basic Fitting Material: Plastic	**Specific Fitting Shape**: Cap
Pipe Size (Fittings): 4"	**Pipe Fitting Material**: PVC
Max. Temp.: Cold Water Only	**Basic Fitting Shape**: Cap
Item: Cap	**Number of Holes**: 0
Compliance: ASTM	**Standards**: ASTM D3034
Country of Origin (subject to change): United States	

DESCRIPTION

Cap,Body Material PVC,Pipe Size 4 In.,Connection Type Hub,Number of Holes 0,Color White,Max. Temp. Cold Water Only,Standards ASTM D3034,Compliance ASTM

Genova

BAFFLE TEE

PVC SEWER PIPE & FITTINGS

P 800-521-7488
F 810-744-1653

Genova Products, Inc. World Headquarters
7034 E Court St
Box 309
Davison, MI 48423-0309

4" HUB PVC BULL NOSE TEE

SPECIFICATIONS

| **Mfr #:** 41440

Color: White	**Fitting Connection Type**: Hub
Basic Fitting Material: Plastic	**Specific Fitting Shape**: Bull Nose Tee
Pipe Size (Fittings): 4"	**Pipe Fitting Material**: PVC
Max. Temp.: Cold Water Only	**Basic Fitting Shape**: Tee
Item: Bull Nose Tee	**Number of Holes**: 0
Compliance: ASTM	**Standards**: ASTM D3034
Country of Origin (subject to change): United States	

DESCRIPTION

Bull Nose Tee, Pipe Size (Fittings) 4 In., Fitting Connection Type Hub, Number of Holes 0, Color White, Max. Temp. Cold Water Only, Standards ASTM D3034, Compliance ASTM

Genova

BAFFLE TEE

PVC SEWER PIPE & FITTINGS

P 800-521-7488
F 810-744-1653

Genova Products, Inc. World Headquarters
7034 E Court St
Box 309
Davison, MI 48423-0309

4" HUB PVC SANITARY TEE

SPECIFICATIONS

| **Mfr #:** 41140

Color: White	**Fitting Connection Type**: Hub
Basic Fitting Material: Plastic	**Specific Fitting Shape**: Tee
Pipe Size (Fittings): 4"	**Pipe Fitting Material**: PVC
Max. Temp.: Cold Water Only	**Basic Fitting Shape**: Tee
Item: Sanitary Tee	**Number of Holes**: 0
Compliance: ASTM	**Standards**: ASTM D3034
Country of Origin (subject to change): United States	

DESCRIPTION

Sanitary Tee,Body Material PVC,Pipe Size 4 In.,Connection Type Hub,Number of Holes 0,Color White,Max. Temp. Cold Water Only,Standards ASTM D3034,Compliance ASTM

Section 1. Chemical Product and Company Identification

Product name	**Polyethylene**	**In Case of Emergency**	**Chemtrec:** (800) 424-9300 **Total Petrochemicals & Refining USA, Inc.:** (800) 322-3462
Supplier	Total Petrochemicals & Refining USA, Inc. P O Box 674411 Houston,TX 77267-4411	**Technical Information**	**For non-emergency** product information: email product.stewardship@total.com
Chemical Family	Polymer	**MSDS#**	PE0016 (EN)
CAS Registry Number	9002-88-4 or 25213-02-9 or 25087-34-7	**Validation Date**	**3/12/2014**
		Print Date	3/12/2014
Synonym	Polyethylene		

This MSDS applies to all grades of polyethylene, including but not limited to:

MS201 BN-NA, HL 323, HL 428, HL 535, HP401 N, B5845, B5800, L###, CD-471, CD-481, BM961, BM962, HDPE ####, HDPE ####.#, HDPE####LD, HDPE####BZ, MDPE ####, mPE3300, Lumicene® BM359 SG, Lumicene® M2710 EP, Lumicene® M3410 EP, Lumicene® M3581 UV, Lumicene® M4041 UV, M3410X, D3720, D4720, CD 4300, 5###, 5335P, 5502BN, 5502BZ, 5502E, 5502LD, 6280, 6280UV, 6405, 6407.#, 6410, 6420, 6480, 37120, 46060UV, 50100.#, 54050, 1225, 1285, 1290, 2285, 2287, 3045, 3045LD, 3050, 3050BZ, 7194, 7194.#, 7195, 7208, 8183, 8208, 9260, 9458, 9658, SB1359NA, XT-10N, XT-10N.1, XT-25N, HDPE Purge ##, where # can be any digit (0-9).

It also includes any of the above named grades with the "-NA" suffix.

This MSDS also covers experimental materials, BDM1 ##-##, BDM2 ##-##, and specially compounded samples labeled Polyethylene N##### and N#####-#, where # can be any digit (0-9).

Section 2. Hazards Identification

Emergency Overview

Irritating vapors to respiratory system and eyes may form when polymer is processed at high temperatures.
Molten or heated material in skin contact can cause severe burns.

Routes of Entry

FOR HOT MATERIAL: Skin contact. Eye contact. Inhalation.

Potential Acute Health Effects

Eyes Dust may cause mechanical irritation to eye.
Heated Polymer: Eye contact can cause serious thermal burns. Vapors formed when polymer is heated may be irritating to the eye.

Skin No known acute effects of this product resulting from skin contact at room temperature.
Heated Polymer: skin contact can cause serious thermal burns.

Inhalation Negligible at room temperature. Nuisance dusts can be irritating to the upper respiratory tract. Irritating vapors may form when the polymer is processed at high temperatures.

Ingestion No effects are expected for ingestion of small amounts. May be a choking hazard.

Potential Chronic Health Effects

CARCINOGENIC EFFECTS: Polyethylene is not a known carcinogen.
Not listed as a carcinogen by OSHA, NTP or IARC.

Medical Conditions Aggravated by Overexposure

There is no known effect from chronic exposure to this product. Repeated or prolonged exposure is not known to aggravate medical condition.

Overexposure /Signs/ Symptoms

No adverse health effects anticipated from the solid pellet.

See Toxicological Information (Section 11)

Section 3. Composition and Information on Ingredients

Occupational exposure limits, if available, are listed in Section 8.

Substance Name	CAS #	% by Weight
Polyethylene Homopolymer	9002-88-4	~ 100
or		
Ethylene-1-hexene Copolymer	25213-02-9	
or		
Ethylene-1-butene Copolymer	25087-34-7	

Section 4. First Aid Measures

Eye Contact Rinse with water for a few minutes. Seek medical attention if necessary.

Skin Contact **Polymer:** NO known EFFECT on skin contact, rinse with water for few minutes.
Heated Polymer: For serious burns from heated polymer, get medical attention. In case of skin contact, immediately immerse in or flush with clean, cold water.

Inhalation Allow the victim to rest in a well ventilated area.

Ingestion No First Aid procedures are needed.

Section 5. Fire Fighting Measures

Flammability of the Product May be combustible at high temperature.

Auto-ignition Temperature 349°C (660.2°F)

Flash Points CLOSED CUP: 341°C (645.8°F).

Flammable Limits Not available.

Products of Combustion Carbon oxides (CO, CO2) and soot.

Fire Hazards in Presence of Various Substances No specific information is available in our database regarding the flammability of this product in presence of various materials.

Explosion Hazards in Presence of Various Substances Risks of explosion of the product in presence of mechanical impact: Not expected.
Risks of explosion of the product in presence of static discharge: Possible.

Risk of explosion from dust accumulation of this product is possible. See MSDS section 7 Handling for more information.

Fire Fighting Media and Instructions SMALL FIRE: Dry chemical extinguisher (ABC or AB). Use water spray or fog.
LARGE FIRE: Use water spray or fog. Do not use water jet.

May re-ignite itself after fire is extinguished.

Protective Clothing (Fire) Wear MSHA/NIOSH approved self-contained breathing apparatus or equivalent and full protective gear.

Special Remarks on Fire Hazards Fire may produce irritating gases and dense smoke.

Flowing material may produce static discharge, igniting dust accumulations.

Special Remarks on Explosion Hazards Processing or material handling equipment may generate dust of sufficiently small particle size, that when suspended in air may be explosive.

Section 6. Accidental Release Measures

Small Spill and Leak Pellets on the floor could present a serious slipping problem.
Good housekeeping must be maintained at all times to avoid this hazard.
Sweep, shovel, or vacuum material into clean containers.

Large Spill and Leak Use a shovel to put the material into a convenient waste disposal container. Do not allow any potentially contaminated water with pellets to enter any waterway, sewer or drain.

Section 7. Handling and Storage

Handling Handling of plastic may form nuisance dust. Protect personnel.

Pneumatic material handling and processing equipment may generate dust of sufficiently small particle size that, when suspended in air, may be explosive. Dust accumulations should be controlled through a comprehensive dust control program that includes, but is not limited to, source capture, inspection and repair of leaking equipment, routine housekeeping and employee training in hazards. See NFPA 654.

When handled in bulk quantities, this product and its associated packaging may present a crushing hazard due to the large masses involved, possibly resulting in severe injury or death.

Storage Keep container dry. Keep in a cool place. Ground all equipment containing material. Keep container tightly closed. Keep in a cool, well-ventilated place. Combustible materials should be stored away from extreme heat and away from strong oxidizing agents.

Section 8. Exposure Controls/Personal Protection

Engineering Controls Use process enclosures, local exhaust ventilation, or other engineering controls to keep airborne levels below recommended exposure limits. If user operations generate dust, fume or mist, use ventilation to keep exposure to airborne contaminants below the exposure limit.

Personal Protection

Eyes Safety glasses with side shields.

Body Coveralls.

Respiratory Ventilation is normally required when handling this product at high temperatures. Wear appropriate respirator when ventilation is inadequate.

Hands Thermally insulated gloves required when handling hot material.

Feet Shoes.

Protective Clothing (Pictograms)

Personal Protection in Case of a Large Spill Gloves. Coveralls.

Product Name	Exposure Limits
Polyethylene Homopolymer or Ethylene-1-hexene Copolymer or Ethylene-1-butene Copolymer	Not established.

Consult local authorities for acceptable exposure limits.

Section 9. Physical and Chemical Properties

Physical State and Appearance Solid. (Solid)

Color Translucent white pellets.

Odor Odorless.

Molecular Weight Not applicable.

Molecular Formula (-CH2-CH2-)x

Melting/Freezing Point	126 to 136°C (258.8 to 276.8°F)
Specific Gravity	0.91 to 0.97 (Water = 1)
Volatility	Negligible.
Solubility in Water	Insoluble in water.

Section 10. Stability and Reactivity

Stability and Reactivity	The product is stable. Avoid temperatures above 300 degree C (570 F).
Conditions of Instability	No additional remark.
Incompatibility with Various Substances	May react or be incompatible with oxidizing materials.
Hazardous Decomposition Products	Hazardous decomposition products are carbon monoxide, carbon dioxide, dense smoke, and various hydrocarbons.
Hazardous Polymerization	Under normal conditions of storage and use, hazardous polymerization will not occur.

Section 11. Toxicological Information

Toxicity to Animals	Very low toxicity to humans or animals.
Chronic Effects on Humans	**CARCINOGENIC EFFECTS:** Not listed as a carcinogen by OSHA, NTP or IARC.
Other Toxic Effects on Humans	Not considered to be dangerous to humans.

Section 12. Ecological Information

Ecotoxicity	Avoid release to the environment. This product is not expected to bioaccumulate through food chains in the environment.
Biodegradable/OECD	Not readily biodegradable. Persistent in the environment.
Mobility	Because of its physico-chemical properties, the product has a low soil mobility. This material floats on water.

Section 13. Disposal Considerations

Waste Information	Transfer to an approved disposal area in accordance with federal, state, and local regulations.

Consult your local or regional authorities.

Section 14. Transport Information *(for domestic bulk shipments, non-bulk shipments may differ)*

DOT Classification for Bulk Shipments (non bulk shipments may differ)	Not a DOT controlled material (United States).
Proper Shipping Name/ Description	Not applicable.
UN Number	Not applicable.
Packing Group	Not applicable.
Marine Pollutant	Not listed in Appendix B to 49CFR172.101
Hazardous Substances Reportable Quantity	Not applicable
Special Provisions for Transport	Not applicable.
TDG Classification	Not controlled under TDG (Canada).
IMO/IMDG Classification	Not controlled under IMDG.
ICAO/IATA Classification	Not controlled under IATA.

USCG Proper Shipping Name Not Available

Section 15. Regulatory Information

HCS Classification This product is not a "Hazardous Chemical" as defined by the OSHA Hazard Communication Standard, 29 CFR 1910.1200.

U.S. Federal Regulations TSCA inventory: All the ingredients are on the TSCA list.

SARA 301/302/303

No chemicals in this product are listed as extremely hazardous substances in 40 CFR 355, Emergency Planning And Notification (Appendix A to Part 355).

SARA 304

No chemicals in this product require reporting under the requirement of 40 CFR 355, Emergency Planning And Notification (SARA extremely hazardous substances listed in Appendix A to Part 355 or CERCLA hazardous substances listed in Table 302.4 of 40 CFR Part 302).

SARA 313

This product contains no chemicals in excess of the applicable de minimis concentration that are subject to the reporting requirements of Section 313 of Title III of the Superfund Amendments and Reauthorization Act of 1986 and 40 CFR Part 372 (Table 372.65).

SARA 311/312

This product is not a “Hazardous Chemical” as defined by the OSHA Hazard Communication Standard, 29 CFR 1910.1200, and as such does not require reporting under the requirements of 40 CFR 370, Hazardous Chemical Reporting: Community Right-To-Know.

International Regulations

WHMIS (Canada) Not controlled under WHMIS (Canada).

DSCL (EEC) This product is not classified according to EU legislation.

CEPA DSL/NDSL This material is listed or exempted.

State Regulations To the best of our knowledge, this product does not contain reportable levels of substances currently listed in regulations of any particular state in the United States.

California Prop. 65: There are no Proposition 65 chemicals present in our polyethylene resins at levels that would require a warning under the California Safe Drinking Water and Toxic Enforcement Act.

Section 16. Other Information

Label requirements Irritating vapors to respiratory system and eyes may form when polymer is processed at high temperatures.
Molten or heated material in skin contact can cause severe burns.

Hazardous Material Information System (U.S.A.)

Health	0
Fire Hazard	1
Reactivity	0
Personal Protection	

National Fire Protection Association (U.S.A.)

References

Chemtox Database
Hazardous Substance Database

Other Special Considerations Acceptable business/technical terms necessary for medical device applications must be developed by contacting your Total Petrochemicals & Refining USA, Inc. sales representative. Without such documented business terms, Total Petrochemicals & Refining USA, Inc. makes no representations and disclaims all warranties, express or implied, concerning biocompatibility and/or suitability of this product for medical device applications.

Validated on 3/12/2014. **Printed 3/12/2014.**

Chemtrec:
(800) 424-9300
Total Petrochemicals & Refining USA, Inc.:
(800) 322-3462

Notice to Reader

The information contained in this Material Safety Data Sheet (MSDS) / Safety Data Sheet (SDS) is believed by Total Petrochemicals & Refining USA, Inc. (TPRI) to be accurate on the date issued. However, materials may present unknown hazards and should be used with caution. Final determination of suitability and use of any material is the sole responsibility of the user. Neither TPRI nor any of its subsidiaries or affiliated companies assumes any liability whatsoever for the accuracy or completeness of the information contained herein or reliance thereto. If the material is repackaged, the user is responsible and must ensure that proper health, safety and other necessary information is included with the material and/or on the container. NO WARRANTIES OF ANY KIND, EITHER EXPRESSED OR IMPLIED, INCLUDING WARRANTIES OF MERCHANTABILITY OR FITNESS FOR A PARTICULAR PURPOSE, ARE MADE REGARDING THE MATERIALS OR THE INFORMATION CONTAINED IN THIS SDS. ALTERATION OF THIS DOCUMENT IS STRICTLY PROHIBITED.

MSDS Name Polyethylene Pellets Parent **MSDS Code** PE_PELLETS

23.03

To obtain an electronic copy of this MSDS, please email: product.stewardship@total.com.

PL
Pawl-Lok

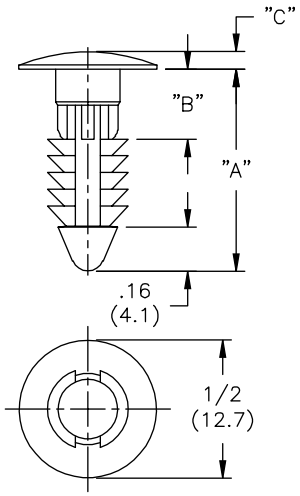

Material: Nylon 6/6, RMS-01 Color: Natural			
Part No.	Standard Pack: 1000 per bag		
	"A"	"B"	"C"
PL-250-10-01	5/8 (15.9)	1/8 (3.2)	.08 (2.0)
PL-250-12-01	3/4 (19.1)	1/4 (6.4)	.07 (1.8)

Features

- For use in threaded, non-threaded, drilled or punched .250" (6.35mm) diameter holes in wood, metal (threaded), particle board, plastic, foam or rubber panels
- Other head styles and sizes available by special order

C

MPLE-3.5M-01
Pawl-Lock, Miniature

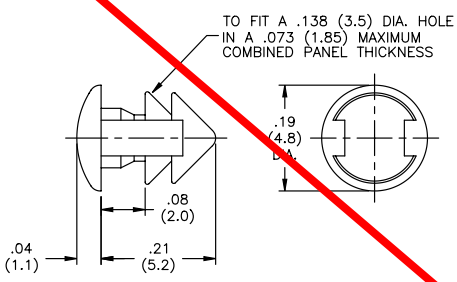

Material: Nylon 6/6, RMS-01 Color: Natural
Standard Pack: 1000 per bag
Part available in V-0 material by special order. To order, replace -01 with -19.

MPLE-3.2M/3.5M-01
Pawl-Lock, Miniature

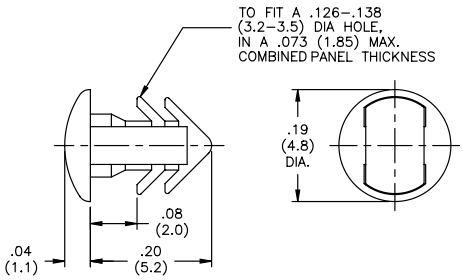

Material: Nylon 6/6, RMS-01 Color: Natural
Standard Pack: 1000 per bag
Part available in V-0 material by special order. To order, replace -01 with -19.

MPLE-3.2M-01
Pawl-Lock, Miniature

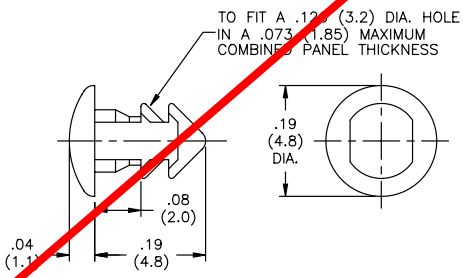

Material: Nylon 6/6, RMS-01 Color: Natural
Standard Pack: 1000 per bag
Part available in V-0 material by special order. To order, replace -01 with -19.

BPF
Barbed Push Fastener

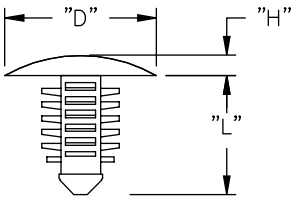

Tip Configurations

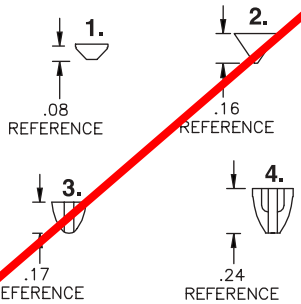

Features

- For use in threaded, non-threaded, drilled or punched holes in wood, metal (threaded), particle board, plastic, foam or rubber panels

Material: Nylon 6/6, RMS-49 Color: Black						
Part No.	Standard Pack: 1000 per bag					
	Hole Dia. ±.003 (.08)	Thickness	"D"	"L"	"H"	Style Type
BPF-A414	.185 (4.7)	.031 - .118 (0.8-3.0)	.45 (11.5)	.48 (12.2)	.07 (1.8)	1
BPF-F4410	.197 (5.0)	.059 - .295 (1.5-7.5)	.51 (12.9)	.58 (14.7)	.09 (2.3)	3
BPF-F2495	.276 (7.0)	.125 - .236 (3.2-6.0)	.59 (15.0)	.57 (14.5)	.08 (2.0)	2
BPF-F3T31	.197 (5.0)	.079 - .394 (2.0-10.0)	.62 (15.7)	.83 (21.1)	.09 (2.3)	3
BPF-F4G12	.276 (7.0)	.079 - .591 (2.0-15.0)	.70 (17.8)	.97 (24.6)	.10 (2.5)	4

PFP-7-01
Press Fit Pin

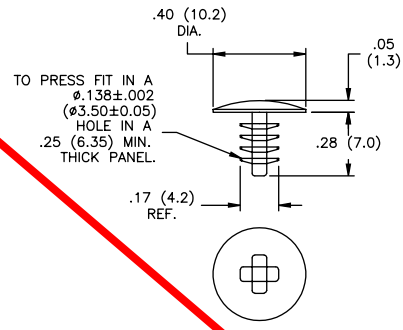

Material: Nylon 6/6, RMS-01 Color: Natural
Standard Pack: 1000 per bag

TECAMID® 66 natural - Stock Shapes

Chemical Designation
PA 66 (Polyamide 66)

Colour
natural opaque

Density
1.14 g/cm^3

Main features
- very good slide and wear properties
- good machinability
- broad chemical compatibility
- resistent to cleaning agents

Target Industries
- agricultural machinery
- automotive industry
- business machines
- construction industry
- food engineering
- food processing
- conveyor technology
- heavy duty industry
- textile industry

Mechanical properties	condition	value		test method		comment
Modulus of elasticity (tensile test)		350,000	psi	ASTM D 638		(1) Data obtained from public source (2) Data obtained from public source (3) Data obtained from public source
Tensile strength at yield	@ 73 °F	12,000	psi	ASTM D 638		
Tensile strength at break	@ 73 °F	12,300	psi	ASTM D 638	1)	
Elongation at yield	@ 73 °F	7	%	ASTM D 638	2)	
Elongation at break	@ 73 °F	50	%	ASTM D 638		
Flexural strength	@ 73 °F	16,500	psi	ASTM D 790		
Modulus of elasticity (flexural test)	@ 73 °F	440,000	psi	ASTM D 790		
Compression strength	@ 73 °F, 1% strain	1,500	psi	ASTM D 695		
Compression modulus	@ 73 °F	392,000	psi	ASTM D 695	3)	
Impact strength (Izod)	@ 73 °F	1.2	ft-lbs/in	ASTM D 256		
Rockwell hardness	@ 73 °F M Scale	85		ASTM D 785		
Coefficient of friction	Dynamic 40 psi, 50 fpm	0.26		ASTM D 3702		
Wear rate	40 psi, 50 fpm	$200*10^{-10}$	in³-min/ft-lbs-hr	ASTM D 3702		

Thermal properties	condition	value		test method		comment
Melting temperature		491	°F	ASTM D 2133	1)	(1) publicly sourced data (2) publicly sourced data (3) publicly sourced data (4) publicly sourced data (5) publicly sourced data (6) publicly sourced data
Deflection temperature	@264 psi	194	°F	ASTM D 648	2)	
Deflection temperature	@ 66 psi	450	°F	ASTM D 648	3)	
Service temperature	short term	300	°F	-	4)	
Service temperature	Long Term Short Term	185	°F	-	5)	
Thermal expansion (CLTE)		$4.5*10^{-5}$	in/in/°F	ASTM D 696	6)	
Specific heat		0.4	BTU/lb-F°	-		

Electrical properties	condition	value		test method		comment
Volume resistivity		10^{-15}	Ω*cm	ASTM D 257	1)	(1) publicly sourced data (2) publicly sourced data (3) publicly sourced data (4) publicly sourced data
Dissipation factor	@ 60 Hz, 70 °F	0.01		ASTM D 150	2)	
Dielectric constant	@ 60 Hz, 70 °F, 50% RH	4		ASTM D 150	3)	
Dielectric constant	@ 1 MHz	3.6		ASTM D 150	4)	

Other properties	condition	value		test method		comment
Water absorption	@ 24 hrs, 73 °F	0.45	%	ASTM D 570		(1) publicly sourced data (2) 6.0 mm sample extruded
Moisture absorption	@ saturation, 73 °F	8.5	%	ASTM D 570	1)	
Flammability (UL94)		V-2		-	2)	

- Resin specification:
  ASTM D6779 PA0110 B54220 or ASTM D6779 PA0114 and ASTM D4066 PA0114
  Shapes specification: ASTM D5989-11 S-PA0111

This information reflects the current state of our knowledge and is intended only to assist and advise. It is given without obligation or liability. It does not assure or guarantee chemical resistance, quality of products or their suitability in any legally binding way. Values are not minimum or maximum values, but guidelines that can be used for comparative purposes in material selection. They are within the normal range of product properties and do not represent guaranteed property values. Testing under individual application circumstances is always recommended. Data is obtained from extruded shapes material unless otherwise noted. References to FDA compliance refer to the resins from which the products were made unless otherwise noted. All trade and patent rights should be observed. All rights reserved. Data sheet values are subject to periodic review, the most recent update can be found at www.ensinger-inc.com.

Ensinger Inc. Headquarters
365 Meadowlands Boulevard
Washington, PA 15301, USA

Phone 800-243-3221 Sales
Phone 800-869-4029 Technical
Fax 724-746-9209
sales@ensinger-ind.com

HANDLE MATERIAL

Safety Data Sheet

Tecamid® 6/6

ISSUE DATE: 06/03/2015

1. PRODUCT AND COMPANY IDENTIFICATION

PRODUCT NAME: Tecamid 6/6
SYNONYMS: Not Applicable
PRODUCT COLORS: Natural and Black

MANUFACTURER: Ensinger Inc.
DIVISION: Stock Shapes
ADDRESS: 365 Meadowlands Blvd., Washington, PA 15301

EMERGENCY PHONE: (724) 746-6050
OTHER CALLS: (856) 227-0500

CHEMICAL NAME: Polyamide
CHEMICAL FAMILY: Nylon 6/6
CHEMICAL FORMULA: basic formula $(C_{12}H_{22}N_2O_2)_n$

PRODUCT USE: Stock Shape for Machining
PREPARED BY: Allyson M. Crouse, Technical Resource Manager

SECTION 1 NOTE: Revised June 3, 2015

2. HAZARDS IDENTIFICATION

EMERGENCY OVERVIEW: Mechanical injury only.

ROUTES OF ENTRY: Eyes

POTENTIAL HEALTH EFFECTS

EYES: Solid or dust causes irritation or corneal injury due to mechanical action.

SKIN: Essentially nonirritating to skin. Mechanical injury only. Molten material may burn skin.

INGESTION: Single dose oral LD50 has not been determined. Single dose oral toxicity is believed to be very low. Now hazards anticipated from ingestion incidental to industrial exposure.

INHALATION: Dust may cause irritation to upper respiratory tract. At room temperature, exposure to vapors are unlikely due to physical properties, normal processing temperatures may generate vapors, which may cause irritation if ventilation is inadequate.

ACUTE HEALTH HAZARDS: None Known

CHRONIC HEALTH HAZARDS: None Known

MEDICAL CONDITIONS GENERALLY AGGRAVATED BY EXPOSURE: None Known

CARCINOGENICITY – None Known

In 1995, the International Agency for Research on Cancer (IARC) concluded that there is "sufficient evidence in experimental animals for the carcinogenicity of carbon black." IARC's overall evaluation was that "Carbon black is possibly carcinogenic to humans (2B)." In 2006, IARC re-affirmed this classification. There has been no causal link between carbon black exposure and cancer risk in humans. Applying the rules of the Globally Harmonized System of Classification and Labeling (GHS, e.g. UN `Purple Book´, EU CLP Regulation) the results of repeated dose toxicity and carcinogenicity studies in animals do not lead to classification of Carbon Black for Specific Target Organ Toxicity (Repeated exposure) and carcinogenicity. UN GHS says that even if adverse effects are seen in animal studies or in-vitro tests, no classification is needed if the mechanism or mode of action is not relevant to humans. The European CLP Regulation also mentions, that no classification is indicated if the mechanism is not relevant to humans. Furthermore, the CLP guidance on classification and labeling states, that “lung overload“in animals is listed under mechanism not relevant to humans.

Carbon Black CAS# 1333-86-4

OSHA: The legal airborne permissible exposure limit (PEL) is 3.5 mg/m^3 averaged over an 8-hour work shift.

ACGIH: The threshold limit value (TLV) is 3.5 mg/m^3 averaged over an 8-hour work shift.

NIOSH: The recommended airborne exposure limit (REL) is 3.5 mg/m^3 averaged over a 10-hour work shift.

The recommended airborne exposure limit (REL0 is 0.1 mg PAHs/m^3 (as the Cyclohexane-extractable fraction) for Carbon Black in the presence of Polycyclic Aromatic Hydrocarbons averaged over a 10-hour work shift.

Particulates

OSHA: Particulates not otherwise regulated/OSHA (PEL) 15 mg/m^3 (TWA, Total Dust)

Particulates not otherwise regulated/OSHA (PEL) 5 mg/m^3 (TWA, Respirable Dust)

ACGIH: Particulates not otherwise regulated/ACGHI (TLV) 10 mg/m^3 (TWA, Total Dust)

3. COMPOSITION/INFORMATION ON INGREDIENTS

INGREDIENT:

CAS NO.	% WT
polyhexamethylenediamine adipate, 32131-17-2	>95
Carbon Black, 1333-86-4	0 - 5

The non-hazardous components and exact percentage of the composition have been withheld as a trade secret.

This product consists primarily of high molecular weight polymers, which are not expected to be hazardous.

This product contains a proprietary blend of components encapsulated within a polymer matrix. These components are not regarded as hazardous under 2012 OSHA Hazard Communication Standard; 29CFR Part 1910.1200.

4. FIRST AID MEASURES

EYES: Rinse cautiously with water for several minutes. Remove contact lenses, if present and easy to do. Continue rinsing for at least 15 minutes. Mechanical effects only.

SKIN: Wash off in flowing water or shower.

INGESTION: No adverse effects anticipated by this route of exposure incidental to proper industrial handling. If ingested, induce vomiting; if patient is conscious. Call a poison control center/physician, if patient feels unwell.

INHALATION: Remove to fresh air, if effects occur. Consult a physician.

NOTES TO PHYSICIANS OR FIRST AID PROVIDERS: No specific antidote. Supportive care. Treatment based on judgment of the physician in response to reactions of the patient.

5. FIRE FIGHTING MEASURES

FLASH POINT: Not Applicable

EXTINGUISHING MEDIA: Carbon dioxide, water spray, dry chemical, alcohol resistant foam

SPECIAL FIRE FIGHTING PROCEDURES: Combustible. Large molten masses may ignite spontaneously in air. Water quenching is good practice. Minimize the generation and accumulation of dust.

UNUSUAL FIRE AND EXPLOSION HAZARDS: None Known

HAZARDOUS DECOMPOSITION PRODUCTS: Carbon Monoxide, Carbon Dioxide, Nitrogen oxides, ammonia, aldehyde and hydrogen cyanide

SECTION 5 NOTES: Wear full protective suit. In case of combustion, use a suitable breathing apparatus.

6. ACCIDENTAL RELEASE MEASURES

ACCIDENTAL RELEASE MEASURES: Ventilate the area and prevent access to unauthorized people. Wear suitable personal protective equipment. Do not allow entry to drains, water courses or soil. Prevent spreading by use of suitable barriers. Take up with suitable equipment, fill up in air-tight containers and give further treatment as soon as possible.

7. HANDLING AND STORAGE

HANDLING AND STORAGE: Keep away from strong oxidizing compounds. Store in a well-ventilated place. Provide ventilation and wear necessary protectors.

OTHER PRECAUTIONS: Obtain special instructions, before use. Do not breathe dust. Wash hands thoroughly after handling. Do not eat, drink or smoke; when machining this product. Use personal protective equipment as required.

8. EXPOSURE CONTROLS/PERSONAL PROTECTION

ENGINEERING CONTROLS: Standard ventilation required

VENTILATION: Good general ventilation should be sufficient for most conditions. Local exhaust ventilation may be necessary for some operations.

RESPIRATORY PROTECTION: For most conditions a dust mask is sufficient; however, if handling at elevated temperatures without sufficient ventilation, use an approved air-purifying respirator.

EYE PROTECTION: Safety glasses should be sufficient for most operations; however, for dusty operations wear chemical goggles. If vapor exposure causes eye discomfort, use a full-face respirator

SKIN PROTECTION: No precautions other than clean body-covering clothing should be needed.

OTHER PROTECTIVE CLOTHING OR EQUIPMENT: None Known

EXPOSURE GUIDELINES:

Carbon Black CAS# 1333-86-4

OSHA: The legal airborne permissible exposure limit (PEL) is 3.5 mg/m^3 averaged over an 8-hour work shift.

ACGIH: The threshold limit value (TLV) is 3.5 mg/m^3 averaged over an 8-hour work shift.

NIOSH: The recommended airborne exposure limit (REL) is 3.5 mg/m^3 averaged over a 10-hour work shift.

The recommended airborne exposure limit (REL0 is 0.1 mg PAHs/m^3 (as the Cyclohexane-extractable fraction) for Carbon Black in the presence of Polycyclic Aromatic Hydrocarbons averaged over a 10-hour work shift.

Particulates

OSHA: Particulates not otherwise regulated/OSHA (PEL) 15 mg/m^3 (TWA, Total Dust)

Particulates not otherwise regulated/OSHA (PEL) 5 mg/m^3 (TWA, Respirable Dust)

ACGIH: Particulates not otherwise regulated/ACGHI (TLV) 10 mg/m^3 (TWA, Total Dust)

9. PHYSICAL AND CHEMICAL PROPERTIES

APPEARANCE:	Semi-finished stock shape
ODOR:	Not Applicable
PHYSICAL STATE:	Solid
MELTING POINT:	>200 °C (>392 °F)
SPECIFIC GRAVITY (H2O = 1):	>1
SOLUBILITY IN WATER:	Insoluble

10. STABILITY AND REACTIVITY

STABILITY: Stable under normal conditions.

CONDITIONS TO AVOID (STABILITY): High temperatures >340°C (>644°F)

INCOMPATIBILITY (MATERIAL TO AVOID): Incompatible with strong acids, strong bases and strong oxidizing agents.

HAZARDOUS DECOMPOSITION OR BY-PRODUCTS: Aldehydes, nitrogen oxides, traces of hydrogen cyanide, ammonia, carbon monoxide, carbon dioxide, cyclopentanone and other possible toxic substances can be generated during thermal decomposition and combustion.

HAZARDOUS POLYMERIZATION: Not Applicable

11. TOXICOLOGICAL INFORMATION

TOXICOLOGICAL INFORMATION: No data – In solid state, this material is not considered as being harmful to human health.

Carcinogenicity
Carbon Black CAS# 1333-86-4:
International Agency for Research on Cancer (IARC) carcinogenic classification: Group 2B (possibly carcinogenic to humans)

In 1995, the International Agency for Research on Cancer (IARC) concluded that there is "sufficient evidence in experimental animals for the carcinogenicity of carbon black." IARC's overall evaluation was that "Carbon black is possibly carcinogenic to humans (2B)." In 2006, IARC re-affirmed this classification. There has been no causal link between carbon black exposure and cancer risk in humans. Applying the rules of the Globally Harmonized System of Classification and Labeling (GHS, e.g. UN `Purple Book´, EU CLP Regulation) the results of repeated dose toxicity and carcinogenicity studies in animals do not lead to classification of Carbon Black for Specific Target Organ Toxicity (Repeated exposure) and carcinogenicity. UN GHS says that even if adverse effects are seen in animal studies or in-vitro tests, no classification is needed if the mechanism or mode of action is not relevant to humans. The European CLP Regulation also mentions, that no classification is indicated if the mechanism is not relevant to humans. Furthermore, the CLP guidance on classification and labeling states, that “lung overload“in animals is listed under mechanism not relevant to humans.

12. ECOLOGICAL INFORMATION

ECOLOGICAL INFORMATION: No data – This material does not harm the environment, but is not biodegradable.

13. DISPOSAL CONSIDERATIONS

WASTE DISPOSAL METHOD: Dispose of contents/containers in accordance with local, regional, national and international regulations.

14. TRANSPORT INFORMATION

U.S. DEPARTMENT OF TRANSPORTATION
Not regulated

15. REGULATORY INFORMATION

U.S. FEDERAL REGULATIONS

TSCA (TOXIC SUBSTANCE CONTROL ACT): All ingredients are either exempt or listed on the TSCA Chemical Substance Inventory

SARA TITLE III (SUPERFUND AMENDMENTS AND REAUTHORIZATION ACT): This product contains no known toxic chemicals subject to the reporting requirements of Section 313 of the Emergency Planning and Community Right-To-Know Act of 1986 and 40CFR372.

California Prop. 65: WARNING! This product contains a chemical known to the State of California to cause cancer. Carbon Black

PA Right to Know: The following components are listed: Carbon Black

NJ Right to Know: The following components are listed: Carbon Black

MA Right to Know: The following components are listed: Carbon Black

16. OTHER INFORMATION

ADDITIONAL INFORMATION
MEDICAL USE: CAUTION – Do not use in medical applications involving permanent implantation in the human body.

This Safety Data Sheet and the information it contains is offered to you in good faith as accurate. We have reviewed any information contained in this data sheet which we received from sources outside our company. We believe this information to be correct but cannot guarantee its accuracy or completeness. Health and safety precaution in this data sheet may not be adequate for all individuals and/or situations. It is the user's responsibility to evaluate and use this product safely and to comply with all applicable laws and regulations. No statement made in the data sheet shall be construed as a permission or recommendation for the use of any product in a manner that may infringe existing patents. No warranty is made, either expressed or implied.

GLUE

*Estimate
N/A-Not Applicable
N/R-Not Restricted
N/E-Not Established

MATERIAL SAFETY DATA SHEET

NOTE: BLANK SPACES ARE NOT PERMITTED. IF ANY ITEM IS NOT APPLICABLE, THE SPACE MUST BE MARKED TO INDICATE THAT.

IDENTITY (As shown on Label or package) **F-799 CLEAR**	**PART NO. IF APPLICABLE**

SECTION I

MANUFACTURER'S NAME Plasti Dip International, Inc.	**EMERGENCY PHONE No.** 1-800-424-9300
ADDRESS (NUMBER, STREET, CITY, STATE AND ZIP CODE) 3920 Pheasant Ridge Drive	**REVISION #** 0001
Blaine, MN 55449	**MANUFACTURER'S PHONE No. FOR INFORMATION** 1-763-785-2156
	DATE MSDS WAS PREPARED July 11, 2012

SECTION II - HAZARDOUS INGREDIENTS INFORMATION. All Health Hazards which comprise 1% or greater of the composition and all carcinogens if 0.1% of the composition or greater.

HAZARDOUS COMPONENTS CHEMICAL and IDENTITY AND COMMON NAME (S)	% Wt. (OPTIONAL)	CAS NO.	OSHA PEL	ACGIH TLV	OTHER LIMITS RECOMMEND
Toluene	89.7	108-88-3	200 ppm	50 ppm	None

SECTION III - PHYSICAL / CHEMICAL CHARACTERISTICS

BOILING POINT 232°F	**SPECIFIC GRAVITY** (H_20 =1) 0.84 - 0.87	**APPROXIMATE WEIGHT PER GALLON (LBS)** 7.17
VAPOR PRESSURE 22 mmHg @ 20°C	**VAPOR DENSITY (AIR = 1)** Heavier than air	**EVAPORATION RATE (BUTYL ACETATE =1)** > 1.0
SOLUBILITY IN WATER Insoluble	**% VOLATILE** 89.7% **VOC LBS./GAL** 6.4	**OTHER (IF ANY)** None

APPEARANCE AND ODOR Various Colors, Honey Like Substance - Characteristic Odor

SECTION IV-FIRE AND EXPLOSION HAZARD DATA

FLASH POINT (METHOD USED) 45.0°F TCC	**FLAMMABLE LIMITS**	**LEL** 1.2	**UEL** 7.0

EXTINGUISHING MEDIA Carbon Dioxide, Dry Chemical, or Foam

SPECIAL FIRE FIGHTING PROCEDURES Self contained breathing apparatus with a full face piece, operated in pressure demand or other positive pressure mode.

UNUSUAL FIRE AND EXPLOSION HAZARDS This material is flammable and may be ignited by heat, sparks, flame or static electricity.

HAZARDOUS PRODUCTS FORMED BY FIRE OR THERMAL DECOMPOSITION Carbon Dioxide and/or Carbon Monoxide.

EXPLOSIVE LIMITS (% BY VOLUME IN AIR) 1.2 – 7.0

SECTION V - OPTIONAL HAZARD RATINGS IDENTIFICATION

HAZARD RATING **4-EXTREME** **3-HIGH** **2-MODERATE** **1-SLIGHT** **0-INSIGNIFICANT** ****SEE SECTION IV**	**National Fire Protection Association (NFPA)** **FIRE** 3 **REACTIVITY** 0 . **HEALTH** 2 **SPECIAL HAZARDS** None .

This is the "front" when printed in duplex. Page 1 of 2 pages if not duplex.

SECTION VI - REACTIVITY AND STABILITY DATA			
STABILITY	**UNSTABLE**	**STABLE** X	**CONDITIONS TO AVOID** None
INCOMPATIBILITY (Materials to Avoid) Strong acids, bases, oxidizing agents, selected amines with alkali metals and halogens.			
HAZARDOUS DECOMPOSITION OR BY PRODUCTS Carbon Monoxide, Carbon Dioxide			
HAZARDOUS POLYMERIZATION	**MAY OCCUR**	**WILL NOT OCCUR** X	**CONDITIONS TO AVOID** None

SECTION VII - HEALTH HAZARD DATA			
ROUTES OF ENTRY	**INHALATION?** Yes	**SKIN?** Yes	**INGESTION?** Yes **EYES?** Yes
HEALTH HAZARDS	**ACUTE** X	See Signs and Symptoms of Exposure below.	
	CHRONIC X	Brain and Nervous System Damage (Referred to as solvents or painters syndrome). Drying or Cracking skin.	
CARCINOGENICITY: No			
SIGNS AND SYMPTOMS OF EXPOSURE	Headache, Dizziness, Drowsiness, Fatigue, Irregular Heartbeat, Skin and Eye Irritation.		
	Target Organs: CNS, CVS, PNS, Liver, Kidneys, Lungs, Respiratory System, Skin.		
MEDICAL CONDITIONS GENERALLY AGGRAVATED BY EXPOSURE Pre-existing Heart, Liver, Kidney and Lung disorders.			
EMERGENCY AND FIRST AID PROCEDURES	Ingestion: Contact Physician or Poison Control Immediately.		
	Inhalation: Remove to fresh air. Administer Oxygen or Artificial Respiration if Necessary.		
	Eye Contact: Flush with large amounts of water. If irritation persists, contact Physician.		
	Skin: Wash with soap and water.		

SECTION VIII - PRECAUTIONS FOR SAFE HANDLING AND USE	
STEPS TO BE TAKEN IN CASE MATERIAL IS RELEASED OR SPILLED	Wipe up with floor absorbent. Transfer to hood. Prevent run-off to sewers.
	Eliminate all sources of ignition. Ventilate to maintain exposure below PEL's. Use sand or other material to dam
	or contain spills. If large spill, notify appropriate state and local agencies.
WASTE DISPOSAL METHODS Dispose of product in accordance with local, county, state and federal regulations.	
PRECAUTIONS TO BE TAKEN IN HANDLING AND STORAGE	Keep away from sparks, flame and heat sources. Do not store above 120°F and use adequate ventilation.
	Avoid inhalation of vapors and contact with liquid product. Use good personal hygiene.
OTHER PRECAUTIONS	Keep Container Closed When Not In Use. Containers should be disposed of in an environmentally safe manner
	in accordance with Governmental Regulations.

SECTION IX - CONTROL MEASURES		
RESPIRATORY PROTECTION (SPECIFY TYPE) Depending on the Airborne concentration, use a Respirator or Gas Mask with appropriate NIOSH approved cartridge and cannister, or supplied air equipment.		**PROTECTIVE GLOVES** Impervious
VENTILATION	**LOCAL EXHAUST** Supplemental (if needed)	**SPECIAL** None
	MECHANICAL (GENERAL) To maintain exposure below PEL's	**OTHER** None
EYE PROTECTION Chemical splash goggles or approved eye protection.	**OTHER PROTECTIVE CLOTHING OR EQUIPMENT** Impervious Clothing/Boots as needed.	
WORK HYGIENIC PRACTICES Wash thoroughly after handling.		

SECTION X - TRANSPORTATION INFORMATION (Optional)		
D.O.T. PROPER SHIPPING NAME Coating Solution	**D.O.T. HAZARD CLASS** 3, PG II	
IF A "CONSUMER COMMODITY ORM-D", WHAT IS THE HAZARD CLASS 3, PG II		
D.O.T. I.D. No. (N/U OR N/A) UN1139		
IATA PROPER SHIPPING NAME Coating Solution	**IATA HAZARD CLASS** 3, PG II	**IMO No.** N/A

SECTION XI - 313 SUPPLIER NOTIFICATION
THIS PRODUCT CONTAINS THE FOLLOWING CHEMICALS SUBJECT TO REPORTING REQUIREMENTS OF SECTION 313 OF THE EMERGENCY PLANNING AND COMMUNITY RIGHT -TO-KNOW ACT OF 1986, 40 CFR 372, (see table on page 1 for CAS # and percent by weight). Toluene
WARNING: THIS PRODUCT CONTAINS A CHEMICAL KNOWN TO THE STATE OF CALIFORNIA TO CAUSE CANCER AND BIRTH DEFECTS, OR OTHER REPRODUCTIVE HARM.

This is the "back" when printed in duplex. Page 2 of 2 pages if not duplex.

Prepared By: Mark Kenow

THE INFORMATION PROVIDED HEREIN IS BASED ON DATA CONSIDERED ACCURATE. NO WARRANTY IS EXPRESSED OR IMPLIED REGARDING THE ACCURACY OF THE DATA OR THE RESULTS OBTAINED FROM ITS USE. SINCE THE INFORMATION CONTAINED HEREIN MAY BE APPLIED UNDER CONDITIONS BEYOND THE VENDORS CONTROL AND SINCE SUBSEQUENT DATA MAY SUGGEST MODIFICATION OF THE INFORMATION. VENDOR ASSUMES NO RESPONSIBILITY FOR THE RESULTS OF ITS USE.

Addendum A

THIRD PARTY TESTIMONIAL
EVIDENCE OF STABILITY AND DURABILITY

Gentlemen:

We the undersigned, at the request of Treit Products, Inc, have read the above rule IDAPA 58 Title 01 Ch 03 and attest that we have specified and used the Treit Filter since it was approved by the Washington State Department of Health, Environmental Health Programs on May 31, 1989.

This filter was approved as an effluent septic tank filter for use on all residential septic systems in the State of Washington.

Our experience with this product since 1989 allows us to confirm that this filter meets the requirement of IDAPA 58.01.03.009.02 - Evidence of stability and durability.

We would also recommend this filter be approved by the State of Idaho WQD based on our experience with the use of this product.

Signed By:

William L. Stuth
Stuth Company, Inc

Steven G. Wecker, [redacted] - R.S.
On Site Consulting Services

P.E.

Michael D. Mitchell, P.E.
Northwest Septic Co.

Biographical Information
on
Stephen C. Wecker

Education:

- Washington State University 1975 B.S. Degree in Microbiology and Public Health

- University of Washington School of Public Health and Community Medicine 1980 M.S.P.H.

Experience:

- Olympic Health District (now Clallam and Jefferson County Health Departments). Began as entry level sanitarian responsible for various aspects of Environmental Health from the middle of Port Angeles west to the ocean. 1975-1978.

- San Juan County Health Department. Returning to work after graduate school, I took an entry level position. Moved up become the Directory of Environmental Health, in charge of a staff of two. 1981-1984.

- Pac-Tech Engineering. Left San Juan County to work in the private sector designing on-site sewage systems. Began as an entry level position, became the manager of the sewage section with a staff of five. 1984-1987

- Tacoma - Pierce County Health Department. Left the private sector to administer the Health Department's on-site sewage section with a staff of 12 specialists and support staff. 1987.

- Pac-Tech Engineering (now Apex Engineering). Returned to the private sector, to resume managing the company's on-site sewage section. Managed the staff developing as many as 600 designs per year. Participated in the larger, more complex, system designs and repairs.1987-1997.

- Stuth Company. Left the Design sector work with Bill Stuth in the consultation, lecturing, and working with the installation of large on-site sewage systems and commercial on-site sewage systems.

- Onsite Consulting Services. Formed my own firm working in several counties designing onsite sewage systems, consulting on problems, troubleshooting, monitoring and maintaining systems, and continued lecturing.

Other Activities

Lectures through the Puyallup Training Center and nationally on various aspects of on-site sewage disposal. Engagements included, a five state speaking tour of three day "Train the Trainer" on Maintenance and Operation of on-site sewage systems, high strength waste, pressure distribution system workshops, and design courses in Montana, and sandfilter design in Washington.

Chairman of the Washington State Board of Registered Sanitarians (1996), member of the Washington On-Site Sewage Association, and Washington On-Site Sewage Regulations Revision committee (1989-1990). Voted "Outstanding Sanitarian" of the year in 1997 by the Washington State Environmental Health Association.

Resume of Stephen C. Wecker

11787 Black Forest Lane S.E.
Olalla, WA 98359

Goal: Working in the field of Onsite Sewage Disposal

Education

Graduate: University of Washington School of Public Health and Community Medicine. Seattle, WA. October 1978 - September 1980 MSPH Degree.

Areas of Specialization: Onsite sewage disposal and administration. My studies included classes in program evaluation, decision making analysis, human relation in organizations, and an extensive summer school class sponsored by the Graduate School of Business Administration for non-MBA students. My thesis work included advanced classes in waste disposal. My thesis described my work on parameters associated with operating and failing sewage disposal systems.

Undergraduate: Washington State University. Pullman, WA. October 1971 - June 1975. B.S. Degree

Areas of Specialization: Microbiology and Public Health. My education included classes in; basic science, advanced chemistry, advanced microbiology, public health, and several projects related to Environmental Health under the direction of the University Sanitarian.

Experience

October 1997-present

OCS Onsite Consulting Services
P.O. Box 226
Wauna, WA 98395

Responsibilities Deciding to return to the field of onsite sewage disposal system design, I elected to start my own company. I work with other sewage system professionals, engineering firms, developers, and commercial builders, consulting on the methods and means of onsite sewage disposal. Current clients include, QFC, McDonald's Corporation, WA St. Dept. Fish and Wildlife, U.S. Forest Service, Apex Engineering, Larson and Associates, Trinity Land Co. I also maintain my teaching and lecturing responsibilities with the Washington Onsite Sewage Association.

July 1996-October 1997

Stuth Company Inc.
28620 Maple Valley Rd. S.E.
Maple Valley, WA 98038

Responsibilities Having worked with Bill Stuth previously while with Pac-Tech, I had a great respect for what he has done, and his knowledge in the field. I wanted to learn more from him, and to work on his NIBBLER process. Bill was looking for help in the office, and assistance in consulting, presenting around the state, and following up on potential sales. I saw this as an opportunity to learn more while lecturing around Washington and the U.S.

May 1996-July 1996
Designer and Consultant
Head of Soil's Section

Apex Engineering
2601 South 35th Street
Tacoma, WA 98409

Responsibilities: This was a continuation of my role for Pac-Tech Engineering after that company went through bankruptcy. Several of the Pac-Tech owners left, formed their own company, and invited me to move my department with them. I left this position with a great deal of hesitancy, but felt that the market was changing and could not support our level and size. Also the opportunity to work with the Stuth company was overpowering.

October 1987-May 1996
Designer and Consultant
Head of Soil's Section

Pac-Tech Engineering
2601 South 35th Street
Tacoma, WA 98409

Responsibilities: I returned to the private sector, as the company sincerely needed help, and I felt that my efforts at the Health Department were not valued by the new Health Officer. Again I managed a department with a staff of as much as 11 including a wetlands section and a separate office when space became a problem. I began lecturing on a state and national basis, on various areas of onsite sewage disposal. I was responsible for monthly billing; mine and my subordinates, managing the office, and budgeting.

January - October 1987
Program Manager
Onsite Sewage Section

Tacoma-Pierce County Health Dept.
3629 South "D" Street
Tacoma, WA 98408

Responsibilities: Accepted the position of Program or Section Manager of the on-site sewage department. Responsible for the department functions of a staff of approximately 26 and a budget of $750,000. Coordinated the efforts of the managerial and administrative staff below me, and the efforts of the technical staff. Made field inspections with field staff on sensitive sites, or for support. Made presentations to the Board of Health on sewage related issues, and represented the Health Department at public presentations.

April 1984-January 1987
Designer and Consultant
Head of Soil's Section

Pac-Tech Engineering
2601 South 35th Street
Tacoma, WA 98409

Responsibilities: Seeking experience in the private sector, I joined Pac-Tech to manage their soils department designing on-site and class four water systems. Became the department manager coordinating the department's activities with other departments.

January 1981-April 1984
Director Environmental Health

San Juan Co. Health Dept.
Friday Harbor, WA

Responsibilities: Develop, implement, and administer the county's Environmental Health programs, including the annual budget. Coordinate the activities of two Sanitarians. Communicate directly with the Board of Health on Environmental Health issues. Present the department's position to the public at group presentations. Update county codes, develop a Designer's program, and establish a monitoring program to measure the effectiveness of various programs.

July 1975-August 1978
Sanitarian

Clallam County Health Department
Port Angeles, WA

Responsibilities: Implement all Environmental Health programs in western Clallam County including; onsite sewage, potable water, solid waste, vector control, and chemical/physical hazard programs. Assisted in training two Sanitarians. Attended public meetings to present the department's position.

Licenses

Registered Sanitarian with the Washington State Board of Registered Sanitarians and National Environmental Health Association. Licensed Designer in Pierce, Thurston, Kitsap, Snohomish, Clallam, and Jefferson Counties.

Presentations/Publications. Committee Memberships

"An investigation of several parameters of septic tank drainfield discharge" - Master's Thesis (1980).

"Thoughts on repairing failing sewage disposal systems" - NW Short course (1989).

"Ethics and the Environmental Health Professional" - National Conference (1989).

Train the Trainer "Maintenance and Monitoring of Onsite Sewage Systems" - 4 national locations for Small Flows (1996).

Articles in the WOSSA newsletter (1997)

"Designing Onsite Sewage Systems" two locations in Montana - Montana St. Univ. (1996-1997).

"Designing Onsite Sewage Systems" Sun Valley Idaho - Blaine County (1997).

"Designing Onsite Sewage Systems" Kitittas County - Kitittas County Health Department (1997).

"Failure System Analysis" - Washington State Environmental Health Annual Conference (1997).

Member of Washington On Site Sewage Association.

Past secretary, treasurer, Chairman Washington State Board of Registered Sanitarians.

Member of the Tacoma - Pierce County Industry Support Group.

Outstanding Sanitarian of the Year (1997) Washington State.

Member of the Thurston County Technical Advisory Board.

Presenting various one and two day workshops with Dave Lenning for the Washington State On Site Sewage Association.

Two day presentation in Idaho for the regulatory and design community on the Operation and Maintenance of Onsite Sewage Systems.

References will be furnished on request

Michael D. Mitchell, PE
Washington #14882, Oregon #9865
POB 1786, Mt. Vernon, WA 98273-1786
tel 360-757-6974 FAX 360-757-8221

Work History:

1980 to date: Principal/Responsible Engineer of Northwest Septic, Inc. The firm deals with all aspects of on-site septic systems, from the initial site and soil evaluation and design preparation to installation and maintenance. Northwest Septic is involved in over 700 jobs per year, from 50 to 50,000 gallons per day in size.

1976 to 1980: Practicing Consulting Engineer. Registered in both Washington and Oregon. Consulting practice included design of on-site sewage disposal systems.

1966 to 1976: Engineer for private industry eventually becoming a Project Engineer for the Bendix Corporation.

Education:

University of Washington, Seattle WA

Consultant to Regulatory Bodies:

1982-83 Participated in revising WAC 248-96 (Washington State On-Site Code).

1984-90 Appointed to the Washington State Technical Review Committee (TRC) by the Department of Social & Health Services (DSHS). Participated in re-writing "Larger System Guidelines" for DSHS. Helped revise the Mound, Pressure Distribution.

1985 Appointed to the steering committee for the 5th On-Site Disposal Short Course. Advisory Board for Civil Engineering Technology Program at Skagit Valley College.

1987 Rewrote the Sand Filter Guidelines for the State of Washington as part of the On-site Sewage Technical Review Committee.

1988-1993 Appointed to the committee that revised Washington Administrative Code (WAC) 248-96 so thoroughly it became WAC 248-272.

1995 Expert witness for the Washington State Board of Registration for Professional Engineers.

Memberships and affiliations

American Society of Agricultural Engineers. National On-site Wastewater Recycling Association. National Association of Home Builders. Washington Association of Realtors. Building Industry Association of Washington. Washington On-Site Sewage Association. Skagit Island County Builders Association.

Publications:

"Flow Loss in a Pressure Sewage Line", Journal of Environmental Health, Oct. 87 .
University of Washington On-Site Sewage Short Courses

1982 "Drain field Configuration - Sidewall v. Bottom Area
1985 "Vertical Separation" "
1989 "Thoughts on Repairing Failing Sewage Systems"

Appendix G

PaRee Godsill Meeting Minutes Clarification

Meeting minutes clarification and Public Comment for the TGC meeting on June 7, 2018

To: James Craft, DEQ

FROM: PaRee Godsill, Everlasting Concrete Products and Northern Aerobic Systems and Services.

Dear James,

Please review the following comments regarding the March 15, 2018 meeting minutes and Agenda items for public comment.

A. Meeting minutes for March 15, 2018

I would like to clarify some of the comments attributed to me in the March 15, 2018 draft of the meeting minutes pertaining to the SSD Program Update (d).

"PaRee Godsill said, "It doesn't make sense to need to have the manufactures certificate. I ask that certificates from the *manufacture from group trainings or from* other states not be accepted. They shouldn't be able to present that as an individual manufacturer certificate when it is a state certificate. … Don't you think it would be beneficial to have two separate lists?" Norweco has come back and denied some installers,… As a manufacturer we only have one to choose from, then Norweco said no, now we can't install Norweco."

We have experienced a few small problems with the new Service Provider Program. I was trying to relay them to the TGC, so it could possible run smoother. My concerns were about the certification process, the number of complex installers seeking the service provider certificate and the effect on the technology's approval, and lastly getting a copy of the septic permit from the health departments.

First, a complex installer should not be prevented from taking the states service provider exam, because they do not have a manufacturer certificate. The Rule does not require it for RGF and if the manufacturer is no longer in business. Rule 58.01.03.006.04.b and 58.01.03.006.06(a)

Second, that certificates of training from the manufacturer (Norweco, Orenco, Bio-Microbics, ect.) only be accepted. A 'certificate of training' from an onsite sewage association in-lieu-of the manufacturer certificate should not be accepted. Rule 58.01.03.006.06(a)

Third, was a suggestion to have two Service Provider lists. One list for the ETPS that require a manufacturer certificate and the other for those that do not require a certificate, such as the RGF, ETPS manufacturers that are no longer in business and ETPS that are not seeking 'General' approval. TGM 1.10.1

I was trying to convey that there are not enough complex installers seeking to become service providers. Perhaps more would seek the service provider certificate if they knew they could be on the list for the RGF and ETPS with no manufacturer in business. Turning an installer away because they do not have a certificate seems to be counterproductive. Let's get them in the door and maybe they will expand their business capabilities by seeking manufacturer approval for those systems that require it.

I want to clarify that since the Rule change, Norweco has not denied training to any complex installer because they are a distributor for another technology. They have however denied training due to other reasons related to poor servicing, poor monitoring methods, repairing systems with nonapproved components, poorly repaired components and misrepresentation.

B. Comments on the proposed changes to the TGM.
   a. Appendix E. 1.9.1 Managed Operation, Maintenance and Monitoring.
      i. Getting a copy of the permit should be easy and uniform across all health departments. For instance, one district requires a quick email with an address. Another requires a public records request with the legal description. The proposed change to the TGM ask us to obtain a copy of the permit.
   b. Appendix F. 1.9.3 Annual Reporting of Managed Operation, Maintenance, and Monitoring.
      i. Suggest starting the program for the July 1, 2019 reporting period. We did not anticipate the additional cost for the 2017-2018 reporting period. The contract fee's have already been collected. You are asking the service providers for Norweco to pay an additional $6 per permit. That is about $1,020 for our company.

C. Item not on the Agenda for public comment: The TGM 1.9.1.2.d **Notation as to whether the system was pumped since the last O&M visit including the portions of the system pumped, pumping date, and volume.** The pumpers are not required to notify the service provider when a pumping occurs. We cannot always count on the owner knowing the volume pumped or if they pumped the correct chambers/tanks. We recently came across components damaged by the pumper and the homeowner did not know until we came out for the service. Pumpers should be required to have a certificate from the manufacturer prior to pumping an ETPS.

Sincerely,

PaRee Godsill