Idahoan Foods, LLC
P.O. Box 130 529 North 3500 East Lewisville, Idaho 83431
208.754.4686 800.635.6100 www.idahoan.com

April 2, 2013

Dan Pitman
Air Quality Division, IDEQ
1410 N. Hilton
Boise, ID 83706

Permit No. T2-2009.0027
Facility ID No. 019-00038

Dear Mr. Pitman

Idahoan Foods, LLC, is requesting that our current permit, which is a combination of a Tier II operating permit and a permit to construct which expires 5/9/13, be converted to a facility-wide permit to construct.

Thank you,

Leo Herbert

~Leo Herbert~
Corporate Environmental Manager
Idahoan Foods, LLC
208-754-8194
lherbert@Idahoan.com

BISON
ENGINEERING, INC.
1400 11TH AVENUE • HELENA, MT 59601 • 406-442-5768
FAX: 406-449-6653 • E-MAIL: bison@bison-eng.com • www.bison-eng.com

March 28, 2013

Daniel Pitman
Idaho Dept. of Environmental Quality
Air Quality Division
1410 N. Hilton
Boise, ID 83706

Dear Mr. Pitman:

RE: Response to IDEQ issues on Permit Modification Application for Idahoan Foods, LLC (Facility ID No. 019-00038, Permit No. T2-2009.0027)

On behalf of Idahoan Foods, LLC (IFL), Bison Engineering, Inc. (Bison) is submitting additional and updated information regarding the IFL air quality permit modification application for the Idaho Falls, Idaho, processing facility. This submittal is in response to issues brought forth by IDEQ personnel prior to and during a 02/12/2013 meeting to discuss the permit modification status.

Response to General Application, Emission Inventory and Modeling Issues

Issue	Response
Flaker 1,2, & 3 Vaculifts – For PM_{10} emissions reductions to be creditable in the significant impact analysis they must be based on previously modeled emission rate, not on recalculated emissions estimates that are higher than those that were previously modeled. Idahoan assumes PM_{10} equals $PM_{2.5}$ emissions. • Flaker 1 & 2 Vaculift was previously modeled at PM_{10} = 0.166 lb/hr. Recalculated PM_{10} emissions estimates in the application for these same sources, on which reductions are based, is 0.258 lb/hr (reductions will be from the addition of a new baghouse – PM_{10} is assumed to equal $PM_{2.5}$). The base emissions from which reductions are credited should be 0.166 lb/hr instead of 0.258 lb/hr.	IFL agrees with the change in methodology for the baseline on which modeled emission reductions are based. The appropriate changes have been made to the emission inventory and model to reflect these updates.

• Flaker 3 Vaculift was previously modeled at PM_{10} = 0.144 lb/hr. Recalculated PM_{10} emissions estimates in the application for this same source, on which reductions are based, are 0.246 lb/hr (reductions will be from the addition of a new baghouse – PM_{10} is assumed to equal $PM_{2.5}$). The base emissions from which reductions are credited should be 0.144 lb/hr instead of 0.246 lb/hr.	
For the vaculifts, in calculating emissions reductions due to the addition of baghouses (and cyclones) condensable particulate matter should be considered. Baghouses (and cyclones) will have insignificant condensable particulate matter emissions control. Flaker dryer emissions at Idahoan facilities have ranged from 68% to 90% condensable particulate matter. Is this indicative of the condensable fraction of particulate matter in the Flaker's Vaculifts?	IFL agrees with IDEQ's default assumption that the cyclones and baghouses provide insignificant control of condensable emissions. Flaker dryer emissions are not indicative of the dried material handling emissions. Material handling emissions were previously assumed to have insignificant condensable portions. IDEQ personnel have noted, though, that testing of similar facilities' dried material handling processes has resulted in non-negligible portions of condensable emissions. To address this concern, IFL has reviewed the list of potato processing emission sources for representative condensable emission data and has determined that the only condensable particulate test data that would apply to the dried material handling sources would be the 3/12/2004 testing of the flake packaging baghouse at the BLF-Hamer facility. The data from this test showed that 50% of the post-baghouse control emissions were condensable emissions. This fraction has been applied to the post-baghouse emissions of each of the dried material handling sources to adjust the emission rate upwards. The appropriate changes have been made to the emission inventory and model to reflect these updates.

There is filterable particulate matter emissions data for Idahoan's Lewisville plant for a Crush Vacu-lift. Is this emission data more appropriate to use as a basis to estimate emissions from the Flaker Vaculifts than the current method?	Because the Lewisville plant Crush Vacu-lift handles a different product than what will be processed at the Idaho Falls facility, the referenced data are not applicable. IFL has maintained the prior method of calculating material handling emissions except for the accounting for condensable emissions as described above.
For all new material transfer equipment emissions are estimated to be zero. Justification for these estimates should be provided.	Material transfer equipment emissions were reduced to zero for many of the new material storage and handling sources because they are designed as closed-loop systems which do not vent to the atmosphere. The pneumatic transfer equipment used with these sources requires much less air to operate than the flaker line vaculifts, partially due to the shorter transfer distances involved. This allows the equipment to be constructed without outside venting, as described during the 02/12/2013 meeting between IDEQ and IFL. This design basis is indicated on the facility flow diagram provided to IDEQ on 02/21/2013
Material handling throughputs before and after the modifications are listed as the same, yet the application states that the new dryers will have a "much higher production rate than those that they are replacing". Does material handling throughput increase as well? Process descriptions of all material handling equipment would be helpful.	The new dryers will not utilize any of the material handling sources which are currently included in the permit. Throughput rates for these sources will not change as a result of the modification. All new or modified processes which have emissions are considered in the emission inventory, and process rates for each piece of new or modified equipment are listed in the provided forms. IFL has submitted a process flow diagram which demonstrates order of processes and material flow throughout the plant. The one exception to this is the potential for an increased throughput of the dust collector system baghouse based upon the addition of Flaker #4. Accounting for these potential additional emissions is described below.

The throughput to the Baghouse Exhaust Dust Collector System is listed as 1 pound per hour. No assumptions or process description are provided that supports this throughput.	The emission rate for the baghouse exhaust dust collector is based upon a weeklong study that was performed on the dust collector to determine how much particulate had been removed from the air. The result of that study was that on average, 1 pound per hour was collected by the baghouse exhaust dust collector. The dust collector emissions were then back-calculated from this amount assuming 99.9% removal efficiency. As described above, IFL has now considered the potential for an increase in emissions based upon the addition of Flaker #4. To account for this, the assumed throughput of the dust collector baghouse has been increased from 1 lb/hr to 1.5 lb/hr. This change has been incorporated into the revised emission inventory included with this submittal.
Creamy mash dryer (steam heated) with cyclone. Estimated emissions are based on a PM_{10} and $PM_{2.5}$ source test conducted on 9/21/11 at Germ State's Scratch Mash dryer. The total PM emission factor is 0.44 lb/T. The test results show that 84% of the particulate is condensable particulate matter. Emission estimates assume that the cyclone will control all particulate, including condensable particulate, at 95% efficiency. Condensable particulate matter will not be controlled by the cyclone and emissions reductions have been over estimated. The cyclone may control some of the filterable particulate matter; though the 95% removal efficiency needs to be documented (Idahoan did provide cyclone removal efficiencies for the Vaculifts at 95%, but this source does not appear to be a Vaculift). Creamy Mash dryer $PM_{10}/PM_{2.5}$ emissions are currently estimated at 0.0165 lb/hr (with 95% control of condensable particulate matter). $PM_{10}/PM_{2.5}$ emissions should be closer to 0.33 lb/hr than to 0.0165 lb/hr. Process descriptions of the dryers would be helpful.	IFL agrees with IDEQ's default assumption that the cyclones and baghouses provide insignificant control of condensable emissions. The creamy mash dryer is expected to have lower levels of condensable particulate matter than the referenced dryer test on which the emission rate is based. The creamy mash dryer takes dried potato flakes, coats them with oil and re-dries them. The heat input source to the dryer is steam from the boilers and not direct-fired natural gas. Because the product has already been dried once and the unit is not combusting natural gas, IFL is expecting lower levels of condensable emissions than shown in the referenced Gem State test. The level of condensable emissions has been set to 50% of total PM. The emission inventory has been updated to account for this approach.

Plant Exhaust Emissions Changes Idahoan is shutting down two existing Bin Dryers. The bin dryers emissions exit the building through the Plant Exhaust System. The Bin Dryer emissions were previously modeled combined with emissions from 3 air makeup units (AMU). Total PM_{10} emissions modeled were 0.2475 lb/hr, a portion of which are emissions from the Bin Dryers and portion of which was from the AMUs. Current $PM_{10}/PM_{2.5}$ emission estimates from the 3 existing AMUs are 0.08 lb/hr. The previously modeled PM_{10} emission rate for the Bin Dryers combined was then 0.2475 lb/hr – 0.08 lb/hr = 0.1675 lb/hr. For the provided significant impact analysis PM_{10} emissions reductions for the bin dryers shutdown is only 0.095 lb/hr. It appears that greater emissions reductions may be credited (0.1675 vs. 0.095 lb/hr). PM_{10} is assumed to be equal to $PM_{2.5}$.	IFL agrees with IDEQ on the baseline for the calculation of emissions reductions and has updated both the emission inventory and model to reflect this.
Fire Pump Engine An emission inventory was not provided for the firewater pump engine that the modeling report references and that Leo Herbert mentioned on the phone 1/24/13. Ask the modeling group if this needs to be included in the modeling analysis.	The fire pump engine has been included in the emission inventory as well as the 1-hr NO_2 model. Due to the intermittent nature of the engine's operation, IDEQ provided a randomized, hourly emission rate file for use in modeling the impacts for 1-hr NO_2. The intermittent and infrequent nature of fire pump operation makes 24-hr and annual modeling of the emissions by conventional means overly conservative and unrealistic. Maintenance testing of the engine is scheduled for 1 hour every week.
Existing Sources Not Previously Modeled The provided emission inventory includes the following "existing sources" that are not included in the previous model: • 3 existing snifter vents • Creamy Mash Loading Station • Baghouse Flake Tank Rejects	The creamy mash loading station was mistakenly omitted from the model and has now been included in the currently submitted modeling demonstration. The baghouse flake tank rejects emissions should have been reduced to zero as was done for other sources which do not include outside vents.

Ask the modeling group if these need to be included in the modeling analysis.	During the 02/12/2013 meeting, IDEQ stated that the most recent compliance model could be updated to include the snifter vents that existed at the time but were not modeled. If that model still demonstrated compliance with the addition, then the current modeling analysis would not be required to include these existing snifter vents. The previous model has been modified to include the existing vents and still demonstrates compliance. This updated version of previous modeling is included with this submittal. The existing snifter vents were not included in the latest model.
Emission Reductions Boiler #1 CARB data gives $PM_{2.5}$ emission data as 97.6% of total particulate instead of 100% for low sulfur diesel (CARB 0.05% Sulfur). Emission reductions should be adjusted accordingly. DEQ can provide the emissions data so that Idahoan can document the emission estimate that is provided in the spreadsheet.	IFL agrees with this $PM_{2.5}/PM_{10}$ ratio and has adjusted the emission inventory and model to account for the change in emissions reductions based on the particle size data presented.
Additional modeling issues brought forth in 02/12/2013 meeting	
The elevation of boiler #1 was not consistent throughout modeling submittals.	In the latest submittal, the base elevation of Boiler #1 was adjusted to match the base elevation of the building in which it is located. Earlier submittals utilized AERMAP to calculate the elevation based on USGS terrain data.
The building vent height was modeled at 28 feet in the past but is now modeled at 27 feet.	The release height of the building vents has been updated to the original height of 27 feet.
Considering the proposed increases to stack heights for several emitting units, should reductions in stack temperature and/or velocity be considered?	IFL has considered the effects of an increased stack height on the temperature and velocity of those emission points. We believe that stack velocity will not be appreciably affected by the increase in stack height. Exhaust exit velocity is generally a calculated parameter based on stack diameter and an estimated volumetric flow rate provided either for actual or standard conditions. For a constant stack diameter, exhaust exit velocity is directly proportional to the volumetric flow rate. Assuming the exhaust gas acts essentially as an ideal gas, the

	volumetric flow rate is directly proportional to absolute temperature. As the gas cools, the volumetric flow rate decreases by the same proportion as the temperature expressed in absolute units. It is important that the proportionality is to an absolute scale temperature when determining the decrease in flow rate relative to a decrease in temperature. For example, the hottest exhaust stream of the four stacks that will be raised is 160°F. Assuming the additional stack height allows a decrease of 20°F (an unlikely assumption as explained below), the proportional temperature decrease in Fahrenheit is 12.5%. But in Kelvin, it is only a 3.2% decrease. It is also instructive to consider factors that would influence the amount of cooling that might be expected for an exhaust stack. Three primary factors are residence time, mixing, and temperature gradients. • Residence Time – The greatest increase in stack height will be 30 feet for the Flaker #4 stack. At the originally modeled exit velocity of 26.5 ft/sec, the exhaust would traverse the additional 30 feet in 1.13 seconds. This would provide very little time for cooling. • Mixing – Except for the Snifter #4 vent stack, the raised stacks will be at least four feet in diameter. Even if the exhaust streams in these stacks did experience some cooling at the stack wall, cooling of the bulk stream would take significant additional time unless the stream was very turbulent. But the stacks will be straight and turbulent flow will be minimal. • Temperature Gradients – Convective heat transfer rates are proportional to the temperature difference driving the transfer, in

	this case the exhaust gas and the inner wall of the exhaust stack. Modeled exhaust temperatures in the four raised stacks are relatively low, ranging from about 90° to 160° F. On average, these temperatures will be relatively close to ambient temperatures resulting in small temperature gradients. Note also that AERMOD analyses assume exhaust temperature is constant in all cases.[1] This is one of the many accepted inherent approximations in the model. These factors taken together tend toward a conclusion that temperature change in the exhaust streams due to increased stack heights will be minimal and that, as a result, exit velocity decreases will be minimal. Nevertheless, IFL has, for the current modeling analyses, reduced exhaust temperatures for the four raised stacks by approximately 10-20°F each. This will generally result in overestimated impacts.

Updates to the Emission Inventory

The emission inventory for this project was updated as a result of questions and concerns brought forth by IDEQ. These changes include the consideration of condensable emissions when calculating emissions for those units controlled by baghouses and cyclones and updates to the basis for emissions reductions based on past modeling. Direct responses to the issues brought up by IDEQ have been provided above.

Additional changes to the emission inventory have been made as a result of a review of the sources for emission factors used in the emission inventory. The original emission factors were generally based on the highest measured values from historical representative emission tests. These emission factors were all derived from tests performed by one particular emission testing company (Spidell) and were consistently and considerably higher than all other testing company results. For example, a single source was tested at the Idahoan Foods Lewisville facility by Spidell and then eight

[1] The one exception to this rule is if a modeler sets an unheated exhaust stream temperature equal to absolute zero, the model will assign the exhaust temperature equal to the ambient temperature for each modeled hour.

months later by a different testing company. Spidell's results in this case were 300% higher than the other company's results. Similar levels of discrepancy have been observed across similar source types that have been tested by Spidell and by other testing companies. Table 1 contains a comparison of these emission testing results. As a result of this information, IFL has re-evaluated the emission factors chosen in the original emission inventory and updated them based on measurements from testing companies other than Spidell. Table 2 presents the new emission factors used in the analysis.

Table 1: Analysis of Potato Processing Sources Emissions by Test Company

Emission Source	Spidell Factor	Non-Spidell Factor
Flakers	3.9	0.7
Fluid Bed Dryer	2.3	0.4
Snifter Vents	0.5	0.02

Table 2: Revised Potato Processing Sources Emission Rates

Emission Source	Previous Emission Factor (lb/ton)	Current Emission Factor (lb/ton)	Emission Rate Basis
Flakers	4.1	1.4	200% of non-Spidell emission factor
Fluid Bed Dryer	1.2	0.6	150% of non-Spidell emission factor
Snifter Vents	1	0.5	50% of Spidell factor with assumed 50% condensable emission portion

Updates to the 2008 Particulate Model

In response to concerns about the existing snifter vents not being included in past modeling demonstrations, Bison has updated that past model provided by IDEQ on 02/12/2013 to include the existing snifter vents.

Table 3 lists the parameters for the existing snifter vents entered into the updated 2008 modeling demonstration.

Table 3: Existing Snifter Vent Model Parameters

Model Parameter	Snifter Vent #1	Snifter Vent #2	Snifter Vent #3	Parameter Basis
Model ID	SNIFTER1	SNIFTER2	SNIFTER3	N/A
Emission Rate (lb/hr)	0.22	0.22	0.41	See EI
Stack Height (ft)	34.66	29	34.66	Measured Value
Stack Diameter (inches)	7.75"	8.375"	8.375"	Measured Value
Exit Temperature (°F)	108	106	91	Measured Value
Exit Flow Rate (acfm)	1548	904	1205	Measured Value
Base Elevation	1444.53	1444.57	1444.74	Set equal to the associated flaker stack elevation

In addition to the inclusion of the three snifter vents, the following changes were made to the baseline model:

- The header of the .SFC meteorological input file was changed from 06341 to 11059 in order for AERMOD to accept the data processed using a past version of AERMET. This change was discussed with and verbally agreed upon by Cheryl Robinson of IDEQ.
- The pollutant name was changed from PMTEN to PM10 in order for AERMOD to calculate the proper statistical form of the NAAQS.
- The flaker exhaust velocities were updated from 39.7 m/s to 12.2 m/s to account for an error which was discussed in the Statement of Basis and later corrected.

The results of the updated modeling indicated that if the existing snifter vents had been included in past modeling, the model would still have shown compliance. As a result, the three existing snifter vents will not be included in the model analysis associated with the modification application.

Table 4: Updated 2008 Baseline Modeling Results for PM_{10}, 24-hour Average

Modeling Scenario	Peak Modeled Concentration (µg/m^3)	Background Concentration (µg/m^3)	Total Ambient Concentration (µg/m^3)
Without Snifter Vents	54	73	127
Including Snifter Vents	59	73	132

Updates to Current Model – PM Model

Updates to the previously submitted $PM_{10}/PM_{2.5}$ model include the changes in the emission inventory as described above, as well as stack temperature modifications

implemented to alleviate concerns related to potential reductions in temperature due to stack height increases. Table 5 presents the original and updated stack temperatures.

Table 5: Stack Temperature Modifications

Emission Source	Original Temperature (K)	Revised Temperature (K)
Fluid Bed Dryer #1	344	331.5
Fluid Bed Dryer #2	344	331.5
Flaker #4	316	305
Snifter Vent #4	305	300

The creamy mash product transfer raw baghouse was previously omitted from the model and has now been included as an emitting unit with parameters as listed in Table 6.

Table 6: Creamy Mash Product Transfer Feed Baghouse

Model Parameter	Creamy Mash Product Transfer Feed Baghouse	Parameter Basis
Model ID	CM_RAW	N/A
PM 2.5/PM10 Emission Rate (lb/hr)	0.009	See EI
Release Type	HORIZONTAL	Source Vents Horizontally
Stack Height (ft)	40'	Actual Release Height
Stack Diameter (inches)	6"	Actual Stack Diameter
Exit Temperature (°F)	85	Estimated Exhaust Temperature
Exit Flow Rate (acfm)	1050	Manufacturer Data

Updates to Previously Submitted Model – NO_2 Model

Updates to the previously submitted NO_2 model included the changes in stack temperature related to stack height increases as described above, as well as the inclusion of the fire pump engine. Modeling of the fire pump engine was based on running one hour per week for engine testing. This was implemented into the model using a randomized emissions file provided by IDEQ. Modeling parameters for the fire pump engine are listed in Table 7.

Table 7: Fire Pump Engine Modeled Parameters

Model Parameter	Fire Pump Engine	Parameter Basis
Model ID	FPENG	N/A
NO_2/NOx Ratio	0.2	San Joaquin Valley APCD Guidance
NOx Emission Rate (lb/hr)	0.22	NSPS IIII Limitation,
Stack Height (ft)	34.66	Measured Value
Stack Diameter (inches)	7.75"	Manufacturer Data, Attached
Exit Temperature (°F)	108	Manufacturer Data, Attached
Exit Flow Rate (acfm)	1548	Manufacturer Data, Attached

Updated Modeling Results

Table 8 and Table 9 present the results of the updated modeling analyses for $PM_{2.5}$, PM_{10} and NO_2. As shown in the tables, the ambient air quality impacts of this project are shown to be under the significance or NAAQS levels for the pollutants modeled.

Table 8: Air Quality Significance Levels and Modeling Results

Pollutant	Average	Met Data	Modeling Significance Level ($\mu g/m^3$)	Modeled Impact Level ($\mu g/m^3$)	Additional Model Analysis Yes/No
PM_{10}	24-hr	2000-2004	5	0.85	No
PM_{10}	Annual	2000-2004	1	0.00	No
$PM_{2.5}$	24-hr	2000-2004	1.2	0.84	No
$PM_{2.5}$	Annual	2000-2004	0.3	0.00	No

Table 9: Air Quality Ambient Standards and Modeling Results

Pollutant	Averaging Period	Total Ambient Impacts	Background Concentration ($\mu g/m^3$)	Total NAAQS Concentration ($\mu g/m^3$)	NAAQS ($\mu g/m^3$)
NO_2	1-HR	141.33	N/A[2]	141.33	188
NO_2	Annual	44.25	N/A[1]	44.25	100

[2] Hour-of-day background concentrations were provided by IDEQ and utilized within the model for 1-hr and annual NO_2 modeling. The total ambient background concentrations include these numbers.

Other Additional Information

As required by IDEQ, a form FRA and accompanying regulatory applicability analyses have been completed for the fire pump engine in order to address the applicability of 40 CFR 60, Subpart IIII and 40 CFR 63 Subpart ZZZZ to the engine. These forms and analyses are included with this submittal under Attachment C. Manufacturer data for the fire pump engine is included in Attachment B.

The revised electronic emission inventory and modeling files will be uploaded to the IDEQ FTP site as "Idahoan Foods 3-28-2013 Attachment D.zip."

Please call me at 406-442-5768 if you have any questions about this air quality impact analysis or supporting materials.

Sincerely,
BISON ENGINEERING, INC.

Derek Fleming
Project Engineer

Attachment A: Emission Inventory
Attachment B: Fire Pump Manufacturer Data
Attachment C: Form FRA – Fire Pump Engine
Attachment D: Electronic Modeling Files and Emission Inventory – Uploaded to IDEQ FTP site as "Idahoan Foods 3-28-2013 Attachment D.zip"

cc: Leo Herbert – Idahoan Foods, LLC
Cheryl Robinson - IDEQ

ATTACHMENT A: EMISSION INVENTORY

Emissions Unit	$PM_{2.5}$ [a]		PM_{10}		SO_2		NOx		CO		VOC	
	lb/hr	T/yr	lb/hr	T/yr	lb/hr	T/yr	lb/hr	T/yr	lb/hr	T/yr	lb/hr	T/yr
Boiler No. 1	5.1	22.3	5.1	22.3	31.9	93.9	13.5	52.9	10.3	45.3	0.3	1.5
Boiler No. 2	0.4	1.8	0.4	1.8	0.02	0.1	4	17.5	4.5	19.6	0.15	0.6
Bin Dryers (2)	0.10	0.42	0.1	0.42	0.004	0.02	0.95	4.14	1.06	4.64	0.03	0.15
Dryer, Proctor and Schwartz, belt type; combined emissions dryers Nos. 1-3 (steam heated)	2.48	10.81	2.48	10.81	---	---	---	---	---	---	---	---
Dryer, Flaker/Drum type, Nos. 1-3	5.88	25.80	5.88	25.8	---	---	---	---	---	---	---	---
Air Makeup Units (3)	0.2	0.67	0.2	0.67	0.007	0.03	1.51	6.57	1.68	7.36	0.05	0.24
Bag Room Vaculift, Canline Vaculift,	0.08	0.35	0.08	0.35	---	---	---	---	---	---	---	---
Flaker Line 1 & 2 Vaculift	0.17	0.73	0.17	0.73	---	---	---	---	---	---	---	---
Flaker Line 3 Vaculift	0.14	0.63	0.14	0.63	---	---	---	---	---	---	---	---
Totals	14.55	63.51	14.55	63.51	31.93	94.05	19.96	81.11	17.54	76.9	0.53	2.49

Taken from the SOB for the PTC issued on 5/9/2008.

Source ID	Source	$PM_{2.5}$	PM_{10}	SO_2	NOx	CO	VOC	CO_2e
		T/yr	T/yr	T/yr	T/yr	T/yr	T/yr	T/yr
1	Boiler No.1 (NG)	1.98	1.98	0.16	26.03	21.87	1.43E+00	31,568
2	Boiler No.2 (NG)	0.86	0.86	0.07	11.38	9.56	6.26E-01	13,683
3, 4, 5, & 6	Four Flakers (Type 1, 2, 3, & 3)/Drum dryers (steam heated)	15.33	15.33					
7	Flaker Line 1 & 2 Vaculift	2.26E-03	2.26E-03					
8	Flaker line 3 Vaculift	2.15E-03	2.15E-03					
9	Flaker line 4 Vaculift & Baghouse	1.97E-03	1.97E-03					
10	Air Makeup Unit #1 (Waste Plant)	0.08	0.08	0.01	1.07	0.89	5.86E-02	1,281
11	Air Makeup Unit #2 (Flake Room)	0.08	0.08	0.01	1.07	0.89	5.86E-02	1,281
12	Air Makeup Unit #3 (Bag Room)	0.16	0.16	0.01	2.13	1.79	1.17E-01	2,562
13	Air Makeup Unit #4 (Warehouse)	0.21	0.21	0.02	2.81	2.36	1.55E-01	2,819
~~14~~	Baghouse, Day Tank A, Real Line	0.00E+00	0.00E+00					
~~15~~	Baghouse, Day Tank B, Real Line	0.00E+00	0.00E+00					
~~16~~	Baghouse Product Transfer to Real Line #1	0.00E+00	0.00E+00					
~~17~~	Baghouse Product Transfer to Real Line #2	0.00E+00	0.00E+00					
~~18~~	Baghouse for finish product from Real Line #1	0.00E+00	0.00E+00					
~~19~~	Real Line A Tote Loading Station	0.00E+00	0.00E+00					
14 (old 20)	Creamy Mash Loading Station	3.94E-02	3.94E-02					
~~21~~	Baghouse Finished Product Transfer, Creamy Mash	0.00E+00	0.00E+00					
15 (old 22)	Baghouse Exhaust Dust Collector System	3.94E-05	6.75E-10					
16 (old 23)	Real Line #1 fluidized bed dryer (natural gas-fired)	4.94	4.94	0.03	4.26	3.58	2.34E-01	5,125
17 (old 24)	Real Line #2 fluidized bed dryer (natural gas-fired)	4.94	4.94	0.03	4.26	3.58	2.34E-01	5,125
18 (old 25)	Cream mash dryer (steam heated) with cyclone	7.59E-01	7.59E-01					
19 (old 26)	Baghouse Flake Tank Rejects	0.00E+00	0.00E+00					
20	Snifter Vent, Flaker/drum #1	9.42E-01	9.42E-01					
21	Snifter Vent, Flaker/drum #2	9.42E-01	9.42E-01					
22	Snifter Vent, Flaker/drum #3	1.80E+00	1.80E+00					
23	Snifter Vent, Flaker/drum #4	1.80E+00	1.80E+00					
24	Fire Pump Engine	5.21E-03	5.21E-03	0.000157	0.10	0.09	3.96E-02	17
Total		**29.40**	**29.40**	**0.32**	**53.00**	**44.52**	**2.92**	**63,461**

GHG EMISSIONS

Calculation Method- Tier 1

$CO_2 = 1x10^{-3} * Fuel * HHV * EF$

NG Emission Factors

CO_2	53.02	kg/MMBtu	40 CFR 98 Table C-1
CH_4	0.001	kg/MMBtu	40 CFR 98 Table C-2
N_2O	0.0001	kg/MMBtu	40 CFR 98 Table C-2

Diesel Emission Factors

CO_2	73.96	lb/MMBtu	40 CFR 98 Table C-1
CH_4	0.003	kg/MMBtu	40 CFR 98 Table C-2
N_2O	0.0006	kg/MMBtu	40 CFR 98 Table C-2

High Heating Value

NG HHV	1.028E-03	MMBtu/scf	40 CFR 98 Table C-1
#2 Fuel Oil	1.380E-01	MMBtu/gal	40 CFR 98 Table C-1

Global Warming Potentials

CO_2	1	40 CFR 98 Appendix Table A
CH_4	21	40 CFR 98 Appendix Table A
N_2O	310	40 CFR 98 Appendix Table A

Source ID No.	Combustion Source	Capacity (MMBtu/hr)	Fuel	Annual operting hours	Throughput (scf/yr)	CO_2 (metric ton/yr)	CH_4 (metric ton/yr)	N_2O (metric ton/yr)	CO_2e (metric ton/yr)	CO_2e (ton/yr)
1	Boiler No.1 - NG	61.6	Nat. Gas	8760	524,918,287.9	28,610	0.54	0.05	28,638.5	31,568
2	Boiler No.2 - NG	26.7	Nat. Gas	8760	227,521,400.8	12,401	0.23	0.02	12,413.1	13,683
10	Air Makeup Unit #1 (Waste Plant)	2.5	Nat. Gas	8760	21,303,501.9	1,161	0.02	0.00	1,162.3	1,281
11	Air Makeup Unit #2 (Flake Room)	2.5	Nat. Gas	8760	21,303,501.9	1,161	0.02	0.00	1,162.3	1,281
12	Air Makeup Unit #3 (Bag Room)	5	Nat. Gas	8760	42,607,003.9	2,322	0.04	0.00	2,324.6	2,562
13	Air Makeup Unit #4 (Warehouse)	5.5	Nat. Gas	8760	46,867,704.3	2,555	0.05	0.00	2,557.0	2,819
16	Fluidized bed dryer Real #1	10	Nat. Gas	8760	85,214,007.8	4,645	0.09	0.01	4,649.1	5,125
17	Fluidized bed dryer Real #2	10	Nat. Gas	8760	85,214,007.8	4,645	0.09	0.01	4,649.1	5,125
24	Fire Pump Engine	2.1	Diesel	100	N/A	15	6.17E-04	1.23E-04	15.2	17
GHG TOTAL										**63,461**

Idahoan Foods, Inc. - Idaho Falls P-2012-0020 PROJ 61031

Emissions increase from new equipment

	$PM_{2.5}$		PM_{10}		NOx		SOx		CO		VOC		Lead	
Description	lb/hr	T/yr	lb/hr	T/yr	lb/hr	T/yr	lb/hr	T/yr	lb/hr	T/yr	lb/hr	T/yr	lb/hr	T/yr
New Air Makeup Unit #4 (Warehouse)	4.88E-02	0.21	4.88E-02	0.21	0.64	2.81	0.00	0.02	0.54	2.36	0.04	0.15	3.21E-06	1.41E-05
New dryers (Flaker No.4, two FBDs, and one mash dryer)	3.58	17.46	3.58	17.46	1.95	8.52	0.01	0.05	1.63	7.16	0.11	0.47	9.73E-06	4.26E-05
New Material Transfer Equipment	4.50E-04	1.97E-03	4.50E-04	1.97E-03	0.00	0.00	0.00	0.00	0.00	0.00	0.00	0.00	0.00	0.00
Fire Pump Engine	1.04E-01	5.21E-03	1.04E-01	5.21E-03	2.08	0.10	0.00	0.00	1.81	0.09	0.79	0.04	0.00	0.00
TOTAL	3.63	17.68	3.63	17.68	2.59	11.33	0.02	0.07	2.17	9.52	0.14	0.62	1.29E-05	5.67E-05

Emissions decrease from the removing equipment[1]

	$PM_{2.5}$		PM_{10}		NOx		SOx		CO		VOC		Lead	
Description	lb/hr	T/yr	lb/hr	T/yr	lb/hr	T/yr	lb/hr	T/yr	lb/hr	T/yr	lb/hr	T/yr	lb/hr	T/yr
Plant exhaust emission reductions	0.174	0.760	0.174	0.760	0.95	4.14	0.00	0.02	1.06	4.64	0.03	0.15	ND	ND
Dryer, Proctor and Schwartz, belt type; combined emissions dryers Nos. 1-3	2.480	10.810	2.480	10.810									ND	ND
Remove fuel oil from Boiler No.1 [2]	4.526	19.786	4.648	20.322	7.56	26.87	31.86	93.74	5.31	23.43	0.00	0.00	ND	ND
Installing Baghouses on flaker lines 1,2 vaculift	0.165	0.725	0.165	0.725										
Installing Baghouses on flaker lines 3 vaculift	0.144	0.629	0.144	0.629										
TOTAL	7.488	32.710	7.611	33.245	8.51	31.01	31.87	93.76	6.37	28.07	0.03	0.15	ND	ND

[1] Emissions rates from this table were taken from SOB for the 2008 PTC.

[2] The emissions rates permitted in the 2008 PTC minus the emissions rates due to burning natural gas in Boiler No. 1.

Net Emission Changes

	$PM_{2.5}$		PM_{10}		NOx		SOx		CO		VOC		Lead	
Pollutants	lb/hr	T/yr	lb/hr	T/yr	lb/hr	T/yr	lb/hr	T/yr	lb/hr	T/yr	lb/hr	T/yr	lb/hr	T/yr
Emission Changes	-3.86	-15.03	-3.98	-15.57	-5.92	-19.67	-31.85	-93.70	-4.19	-18.55	0.11	0.47	ND	ND

	$PM_{2.5}$	PM_{10}	SO_2 *	Nox*	CO	VOC
	T/yr	T/yr	T/yr	T/yr	T/yr	T/yr
Post-project PTE	29.40	29.40	0.32	53.00	44.52	2.92
Pre-project PTE	63.51	63.51	94.05	81.11	76.9	2.49
Net Emission Changes	-34.11	-34.11	-93.73	-28.11	-32.38	0.43

* This table should not be used because the calculation for natural gas combustion are based on different calcualtion methods for pre-project PTE and post-project PTE.

NG Emission Factors

NOx	100	lb/10^6 scf	AP-42, Table 1.4-1, 1998
CO	84	lb/10^6 scf	AP-42, Table 1.4-1, 1998
PM_{10}	7.6	lb/10^6 scf	AP-42, Table 1.4-2, 1998
SOx	0.6	lb/10^6 scf	AP-42, Table 1.4-2, 1998
VOC	5.5	lb/10^6 scf	AP-42, Table 1.4-2, 1998
Lead	0.0005	lb/10^6 scf	AP-42, Table 1.4-2, 1998

NG heating value	1,028	MMBtu/10^6 scf	40 CFR 98 Table C-1
No.2 fuel oil heating value	138	MMBtu/10^3gal	40 CFR 98 Table C-1

Source ID No.		Description	Capacity (MMBtu/hr)	Throughput (10^3 gal/hr) or (10^6 scf/hr)	Hour/yr	$PM/PM_{10}/PM_{2.5}$ Emissions (lb/hr)[1]	$PM/PM_{10}/PM_{2.5}$ Emissions (ton/yr)	NOx Emissions (lb/hr)	NOx Emissions (ton/yr)	SOx Emissions (lb/hr)	SOx Emissions (ton/yr)	CO Emissions (lb/hr)	CO Emissions (ton/yr)	VOC Emissions (lb/hr)	VOC Emissions (ton/yr)	Lead Emissions (lb/hr)	Lead Emissions (ton/yr)
1	existing	Boiler No.1 (NG)	61.1	5.9436E-02	8760	0.45	1.98	5.94	26.03	3.57E-02	0.16	4.99	21.87	3.27E-01	1.43E+00	2.97E-05	1.30E-04
2	existing	Boiler No.2 (NG)	26.7	2.5973E-02	8760	0.20	0.86	2.60	11.38	1.56E-02	0.07	2.18	9.56	1.43E-01	6.26E-01	1.30E-05	5.69E-05
10	existing	Air Makeup Unit #1 (Waste Plant)	2.5	2.4319E-03	8760	0.018	0.08	0.24	1.07	1.46E-03	0.01	0.20	0.89	1.34E-02	5.86E-02	1.22E-06	5.33E-06
11	existing	Air Makeup Unit #2 (Flake Room)	2.5	2.4319E-03	8760	0.018	0.08	0.24	1.07	1.46E-03	0.01	0.20	0.89	1.34E-02	5.86E-02	1.22E-06	5.33E-06
12	existing	Air Makeup Unit #3 (Bag Room)	5	4.8638E-03	8760	0.037	0.16	0.49	2.13	2.92E-03	0.01	0.41	1.79	2.68E-02	1.17E-01	2.43E-06	1.07E-05
13	new	Air Makeup Unit #4 (Warehouse)	6.6	6.4202E-03	8760	0.05	0.21	0.64	2.81	3.85E-03	0.02	0.54	2.36	3.53E-02	1.55E-01	3.21E-06	1.41E-05
16 (old 23)	new	Real Line #1 fluidized bed dryer (natural gas-fired)	10	9.7276E-03	8760	--- [2]	--- [2]	0.97	4.26	5.84E-03	0.03	0.82	3.58	5.35E-02	2.34E-01	4.86E-06	2.13E-05
17 (old 24)	new	Real Line #2 fluidized bed dryer (natural gas-fired)	10	9.7276E-03	8760	--- [2]	--- [2]	0.97	4.26	5.84E-03	0.03	0.82	3.58	5.35E-02	2.34E-01	4.86E-06	2.13E-05
Total			124.4	**1.21E-01**													
Total from two new natural gas-fired FDBs						---	---	1.95	8.52	0.01	0.05	1.63	7.16	0.11	0.47	9.73E-06	4.26E-05

[1] Assume $PM=PM_{10} = PM_{2.5}$

[2] It has been counted under "Dryers".

Source ID number	Product transfer	Status	Throughput (T/hr)	Throughput PM < 10 um (T/hr)	Annual operating hours hr/yr	Control Efficiency	Control Efficiency	Post Baghouse Condensable PM Ratio, %	PM2.5, lb/hr controlled, using control efficiency	PM2.5, tpy controlled, using control efficiency	PM_{10} lb/hr controlled using control efficiency	PM_{10} T/yr, controlled use control efficiency
*old 14	Baghouse, Day Tank A, Real Line	new	3.75	0.01125	8760		99.9%	50%	0.00E+00	0.00E+00	0.00E+00	0.00E+00
*old 15	Baghouse, Day Tank B, Real Line	new	3.75	0.01125	8760		99.9%	50%	0.00E+00	0.00E+00	0.00E+00	0.00E+00
19 (old 26)	Baghouse Flake Tank Rejects	existing	2.43	0.00729	8760	95.00%	99.9%	50%	0.00E+00	0.00E+00	0.00E+00	0.00E+00
7	Flaker Line 1 & 2 Vaculift	existing	0.86	0.00258	8760	95.00%	99.90%	50%	5.16E-04	2.26E-03	5.16E-04	2.26E-03
8	Flaker line 3 Vaculift	existing	0.82	0.00246	8760	95.00%	99.90%	50%	4.92E-04	2.15E-03	4.92E-04	2.15E-03
9	Flaker line 4 Vaculift & Baghouse	new	0.75	0.00225	8760	95%	99.9%	50%	4.50E-04	1.97E-03	4.50E-04	1.97E-03
*old 16	Baghouse Product Transfer to Real Line #1	new	1.88	0.00564	8760		99.9%	50%	0.00E+00	0.00E+00	0.00E+00	0.00E+00
*old 17	Baghouse Product Transfer to Real Line #2	new	1.88	0.00564	8760		99.9%	50%	0.00E+00	0.00E+00	0.00E+00	0.00E+00
*old 18	Baghouse for finish product from Real Line #1	new	1.88	0.00564	8760		99.9%	50%	0.00E+00	0.00E+00	0.00E+00	0.00E+00
*old 19	Real Line A Tote Loading Station*	new	1.88	0.00564	8760		99.9%	50%	0.00E+00	0.00E+00	0.00E+00	0.00E+00
14 (old 20)	Creamy Mash Loading Station (Product Transfer Raw, Creamy Mash)	new	0.75	0.00225	8760		99.9%	50%	9.00E-03	3.94E-02	9.00E-03	3.94E-02
* old 21	Baghouse Finished Product Transfer, Creamy Mash	new	0.75	0.00225	8760		99.9%	50%	0.00E+00	0.00E+00	0.00E+00	0.00E+00
15 (old 22)	Baghouse Exhaust Dust Collector System	existing	0.00075	2.25E-06	8760		99.9%	50%	9.00E-06	3.94E-05	9.00E-06	6.75E-10
Total from the new equipment									4.50E-04	1.97E-03	4.50E-04	1.97E-03
				0.000225	90.000%	0.94905						

Notes from applicant's EI submitted on May 31, 2012: fraction of product that is PM for normal Flake

0.003

~~Creamy mash is oil coated allowing 0 PM emissions.~~

* According to applicant's 9/27/2012 email, these units are re-engineered. The air flows from the baghouses are sent back to the units and are self-contained.

PM/PM10/PM2.5 Emissions from dryers

Source ID number	Status	Sources	Production rate (T/hr, output)	PM/PM_{10} Emissions Factor (EF, lb PM/T output)	Annual operating hours	Control Efficiency	Condensable PM Ratio, %	$PM_{2.5}$ Emission lb/hr	$PM_{2.5}$ Emission lb/day	$PM_{2.5}$ Emission Ton/yr	PM_{10} Emission lb/hr	PM_{10} Emission lb/day	PM_{10} Emission Ton/yr	EF Reference and notes
3	existing	Flaker/Drum dryer type #1 (steam heated)	0.43 Max	1.4	8760	0	---	0.60	14.45	2.64	0.60	14.45	2.64	
4	existing	Flaker/Drum dryer type #2 (steam heated)	0.43 Max	1.4	8760	0	---	0.60	14.45	2.64	0.60	14.45	2.64	
5	existing	Flaker/Drum dryer type #3 (steam heated)	0.82 Max	1.4	8760	0	---	1.15	27.55	5.03	1.15	27.55	5.03	
6	new	Flaker/Drum dryer type #4 (steam heated)	0.82 Max	1.4	8760	0	---	1.15	27.55	5.03	1.15	27.55	5.03	
3-6		Four flakers combined (2.5 T/hr combined):	2.5 four flakers combined total	1.4	8760	0%	---	3.50	84.00	15.33	3.50	84.00	15.33	Emission rate based on 200% of the Average Non-spidell testing factors
20	existing	Flaker/Drum dryer type #1 (steam heated), Snifter Fan Exhaust	0.43 Max	0.5	8760	0	---	0.22	5.16	0.94	0.22	5.16	0.94	
21	existing	Flaker/Drum dryer type #2 (steam heated), Snifter Fan Exhaust	0.43 Max	0.5	8760	0	---	0.22	5.16	0.94	0.22	5.16	0.94	
22	existing	Flaker/Drum dryer type #3 (steam heated), Snifter Fan Exhaust	0.82 Max	0.5	8760	0	---	0.41	9.84	1.80	0.41	9.84	1.80	
23	new	Flaker/Drum dryer type #4 (steam heated), Snifter Fan Exhaust	0.82 Max	0.5	8760	0	---	0.41	9.84	1.80	0.41	9.84	1.80	Emission factor based on the 3/12/2004 testing of Snifter no. 2 at the Nonpareil facility. The rate includes both condensables and filterable emissions, although the source test was for filterable emissions only. Other Spidell testing results are significantly higher than those performed by other testing companies, so the emission factor used is condered to be more then adequete to account for potential emission from the snifter vents.
16 (old 23)	new	Real Line #1 fluidized bed dryer (natural gas-fired)	1.88	0.6	8760	95%	---	1.13	27.07	4.94	1.13	27.07	4.94	0.4 lb/T product is the average of the 12/1/2005 test of fluidized bed dryer 92 line 4 cyclone at Idahoan Lewisville facility by Avogadro Group and the …. Test at the the …. facility A safety factor 0f 1.5 was applied to the average emission factor to account for any variations between processes that may occur, resulting in an emission factor of 0.6 lb/ton. Spidell testing on similar units is not considered accurate and therefore will not be considered.
17 (old 24)	new	Real Line #2 fluidized bed dryer (natural gas-fired)	1.88	0.6	8760	95%	---	1.13	27.07	4.94	1.13	27.07	4.94	
18 (old 25)	new	Cream mash dryer (steam heated) with cyclone	0.75	0.44	8760	95%	50.00%	0.17	4.16	0.76	1.73E-01	4.16	7.59E-01	9/21/2011 P_{M10} and $PM_{2.5}$ test on Bubble sheet dryer (mash dryer) at Gem State from TS source test log. Gem State Dryer does not have control device. A 50% level of condensable emissions has been assumed for this dryer. The dryer is not expected to be at the same level as the dryer at the Gem State facility as the product entering the creamy mash dryer has already been dried once, at which point it is coated in oil and re-dried to end up with the creamy mash product. Also, the heat source for the creamy mash dryer is steam from the boiler and is not a direct fired unit, resulting in a lower level of condensables.
Total from new dryers								3.58	85.85	17.46	3.58	85.85	17.46	

Diesel Engine Emission Factors

NOx	3	g/bhp-hr	40 CFR 60 Subpart IIII Tier 3 Emission Standard, NMHC+NOx
CO	2.6	g/bhp-hr	40 CFR 60 Subpart IIII Tier 3 Emission Standard
PM_{10}	0.15	g/bhp-hr	40 CFR 60 Subpart Tier 3 IIII Emission Standard
SOx	0.6	lb/10^6 scf	SO2 Calculations[b]
VOC	2.51E-03	lb/bhp-h	AP-42 3.3-1
Lead	0.0005	lb/10^6 scf	AP-42, Table 1.4-2, 1998

Inputs			**SO2 Calculations**		
Engine Mechanical Power Out[a]	315	hp	Liquid Fuel (No. 2 Fuel Oil)		
Fuel Flow	104.85	lbs/hr	S % by weight	0.000015	ULSD
Fuel Flowa	15	gal/hr @ 100%	Fuel feed	104.85	lb/hr
Fuel Heat Content	137000	Btu/gal	S	0.00157275	lb/hr
Fuel Density	6.99	lb/gal	S	4.91484E-05	mol/hr
Heat Input Rate	2.055	MMBtu/hr	SO2 mol wt	64	lb/lb-mols
Testing and Maintenance Hour	100	hours	SO2 ER	0.0031455	lb/hr

Source ID No.		Description	Capacity (HP)	Throughput (gal/hr)	Hour/yr	$PM/PM_{10}/PM_{2.5}$ Emissions (lb/hr)[1]	$PM/PM_{10}/PM_{2.5}$ Emissions (ton/yr)	NOx Emissions (lb/hr)	NOx Emissions (ton/yr)	SOx Emissions (lb/hr)	SOx Emissions (ton/yr)	CO Emissions (lb/hr)	CO Emissions (ton/yr)	VOC Emissions (lb/hr)	VOC Emissions (ton/yr)
24	New	Fire Pump Engine	315	15.00	100	0.10	0.01	2.08	0.10	3.1E-03	1.6E-04	1.81	0.09	7.92E-01	3.96E-02

Notes

a. Manufacturer's specifications

b. SO2 is calculated by fuel sulfur content, not provided by vendor.

NG Emission Factors

NOx	100	lb/10^6 sc	AP-42, Table 1.4-1, 1998
CO	84	lb/10^6 sc	AP-42, Table 1.4-1, 1998
PM-10	7.6	lb/10^6 sc	AP-42, Table 1.4-2, 1998
SOx	0.6	lb/10^6 sc	AP-42, Table 1.4-2, 1998
VOC	5.5	lb/10^6 sc	AP-42, Table 1.4-2, 1998
Lead	0.0005	lb/10^6 sc	AP-42, Table 1.4-2, 1998

Source ID No.	Description	Capacity (MMBtu/hr)	Throughput (10^3 gal/hr) or (10^6 scf/hr)	Hour/yr	$PM_{2.5}$ Emissions (lb/hr)[1]	$PM_{2.5}$ Emissions (ton/yr)	PM/PM_{10} Emissions (lb/hr)[1]	PM/PM_{10} Emissions (ton/yr)	NOx Emissions (lb/hr)	NOx Emissions (ton/yr)	SOx Emissions (lb/hr)	SOx Emissions (ton/yr)	CO Emissions (lb/hr)	CO Emissions (ton/yr)	VOC Emissions (lb/hr)	VOC Emissions (ton/yr)	Lead Emissions (lb/hr)	Lead Emissions (ton/yr)
1	Boiler No.1 (NG)	61.1	5.9436E-02	8760	4.52E-01	1.98	4.52E-01	1.98	5.94	26.03	3.57E-02	0.16	4.99	21.87	0.33	1.43	3.0E-05	1.30E-04
1	Boiler No.1 (No.2 fuel oil)[2]	61.1	4.4275E-01		4.98	21.76	5.10	22.30	13.50	52.90	31.9	93.90	10.3	45.30	0.30	1.50	ND	ND
Boiler No.1 emissions decrease by removing No.2 fuel oil					4.53	19.79	4.65	20.32	7.56	26.87	31.86	93.74	5.31	23.43	-0.03	0.07	ND	ND

[1]PM2.5/PM10 ratio of 97.6% applied based on CARB data

[2] Taken from SOB for the 2008 PTC except for lead

ATTACHMENT B: FIRE PUMP MANUFACTURER DATA

SUBMITTAL DATA
DEEPWELL DIESEL PUMP
1500 GPM @ 125 PSI BOOST
3-D FIRE PROTECTION
IDAHOAN FIRE WELLS PROJECT

AURORA FIRE PUMPS

SELECTION TABLES
60 HERTZ ELECTRIC/DIESEL
VERTICAL TURBINE

1500 GPM, 13FGH

TOTAL HEAD (FT. H20)	NUMBER OF STAGES	MAX. BHP REQUIRED	REQUIRED HP RATING UL LISTED & FM APPROVED 1770 RPM	APPROXIMATE SHIPPING WEIGHT PUMP ONLY (LBS.)	APPROXIMATE SHIPPING WEIGHT PER 5' SECTION COLUMN (LBS.)	BOWL SIZE (INCH)
226–240	4	124	125	1805	270	13FGH
241–250	4	131	125	1805	270	13FGH
251–260	4	137	125	1805	270	13FGH
261–270	4	143	125	1805	270	13FGH
271–280	4	150	150	1805	270	13FGH
281–290	4	156	150	1805	270	13FGH
291–300	4	163	150	1805	270	13FGH
	5	155	150	1960	270	13FGH
301–313	4	172	150	1805	270	13FGH
	5	164	150	1960	270	13FGH
314–328	5	172	150	1960	270	13FGH
329–340	5	180	200	1960	270	13FGH
341–350	5	187	200	1960	270	13FGH
351–360	5	193	200	1960	270	13FGH
361–370	5	200	200	1960	270	13FGH
	6	193	200	2110	270	13FGH
371–380	5	207	200	1960	270	13FGH
	6	199	200	2110	270	13FGH
381–390	5	215	200	1960	270	13FGH
	6	205	200	2110	270	13FGH
391–400	6	211	200	2110	270	13FGH
401–410	6	217	200	2110	270	13FGH
411–420	6	223	200	2110	270	13FGH
	7	216	200	2270	270	13FGH
421–430	6	230	200	2110	270	13FGH
	7	223	200	2270	270	13FGH
431–440	6	237	250	2110	270	13FGH
	7	230	200	2270	270	13FGH
441–450	6	244	250	2110	270	13FGH
	7	236	250	2270	270	13FGH
451–460	6	251	250	2110	270	13FGH
	7	243	250	2270	270	13FGH
461–470	6	258	250	2110	270	13FGH
	7	249	250	2270	270	13FGH
471–480	7	255	250	2270	270	13FGH
481–490	7	261	250	2270	270	13FGH
	8	253	250	2430	270	13FGH
491–500	7	268	250	2270	270	13FGH
	8	260	250	2430	270	13FGH
501–510	7	274	250	2270	270	13FGH
	8	266	250	2430	270	13FGH
511–520	7	281	250	2270	270	13FGH
	8	272	250	2430	270	13FGH
521–530	7	287	250	2270	270	13FGH
	8	279	250	2430	270	13FGH
531–544	7	297	300	2270	270	13FGH
	8	287	250	2430	270	13FGH
	9	281	250	2590	270	13FGH
545–555	8	293	300	2430	270	13FGH
	9	287	250	2590	270	13FGH
556–564	8	300	300	2430	270	13FGH
	9	294	300	2590	270	13FGH

© 2011 Pentair Pump Group, Inc.

AURORA FIRE PUMPS

DIESEL DRIVEN VERTICAL TURBINE

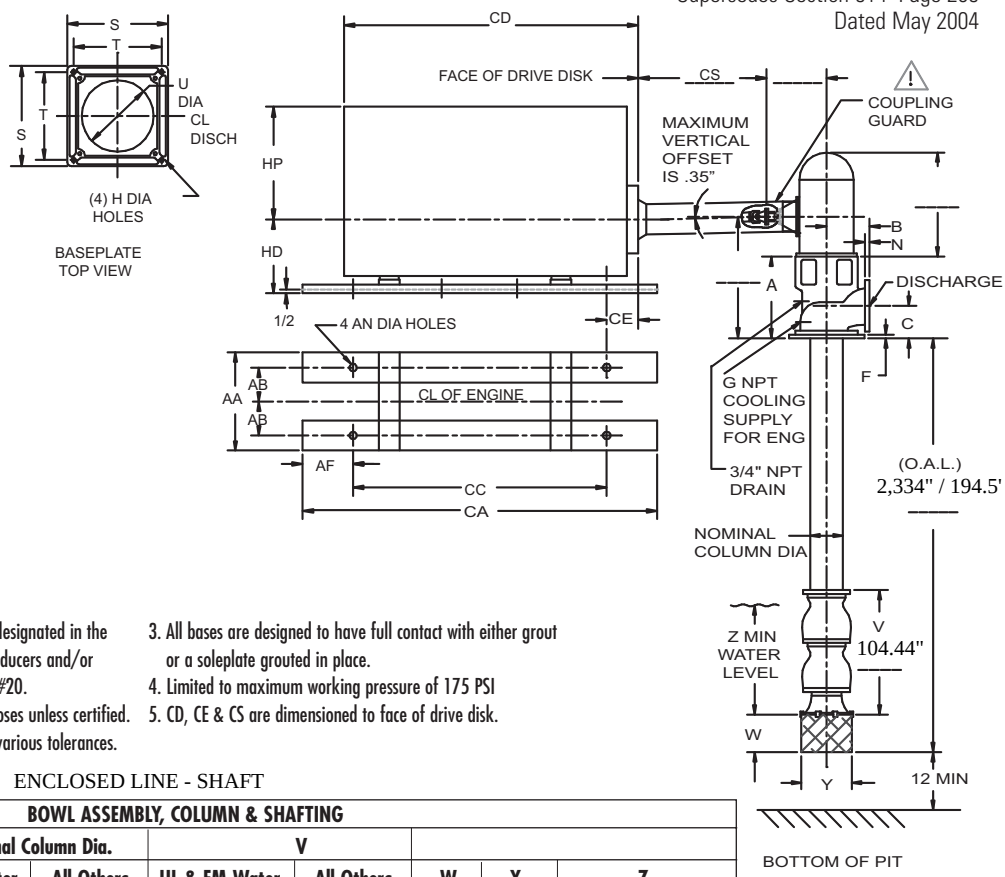

GEAR		
Mfg.	Ratio	Model
Randolph	1:1	G250

NOTES

1. Flange ratings are either 125# or 250# and will be designated in the certification block below for each order submittal. Reducers and/or increasers may be required to meet NFPA Pamphlet #20.
2. Not for construction, installation, or application purposes unless certified. Dimensions shown are typical and may vary due to various tolerances.
3. All bases are designed to have full contact with either grout or a soleplate grouted in place.
4. Limited to maximum working pressure of 175 PSI
5. CD, CE & CS are dimensioned to face of drive disk.

ENCLOSED LINE - SHAFT

BOWL ASSEMBLY, COLUMN & SHAFTING								
		Nominal Column Dia.		V				
Size & Model	# of Stages	UL & FM Water Lube Only	All Others	UL & FM Water Lube Only	All Others	W	Y	Z
13 FGH	~~4~~	8	10	61-13/16	65-1/4	11	13	34
	7 Total Stages			Add 13-1/16 for each additional stage over 4 stages				
15 FGH	3	10	12	54-1/16	57-7/16	13	14-3/4	34 - 2000 GPM 46 - 2500 GPM
	Total Stages			Add 14-1/2 for each additional stage over 3 stages				

DISCHARGE HEADS & BASEPLATES												
Size												
BD	DISCH	A	B	C	F	G	H	N	S	T	U	
16-1/2	8 SDC	23	11-3/8	10	1-1/2	1	7/8	1-3/16	24	21	17-1/8	(4)
16-1/2	8 LAD	23	11-3/8	10	1-1/2	1	7/8	1-3/16	24	21	17-1/8	
20	10 LAD	23	13-7/8	10-1/2	1-1/2	1	7/8	1-1/4	24	21	17-1/8	

8" Disch.

CLARKE JU6H DIESEL ENGINES YOUR ENGINE MODEL JU6H-UFAD98												
MODEL	AA	AB	AF	AN	CA	CB	CC	CD	CE	CS	HD	HP
JU6HUF30	32	15	5	1 x 2	46	N/A	36	45.9	.88	15.2	20.35	45.8
JU6HUF50	32	15	5	1 x 2	46	N/A	36	45.9	.88	15.2	20.35	45.8
JU6HUF60	32	15	5	1 x 2	46	N/A	36	48	.88	15.2	20.35	45.8

Customer: 3-D FIRE PROTECTION / NICKERSON COMPANY, INC.		P.O.#:		Dwg.#
Job Name: IDAHOAN FIRE WELLS		☒ UL ☒ FM ☐ CUL		Flange Rating: ☐ 125# ☒ 250#
Model: 13FGH	# Stages: 7	GPM: 1,500	PSI: 125 PSI	Max. Lift: 180 FT
Engine Mfg.: CLARKE	Engine Model: JU6H-UFAD98	RPM: 1,760	HP: 315	
Certified By:		Date:		

© 2011 Pentair Pump Group, Inc.

AURORA® Pentair Water

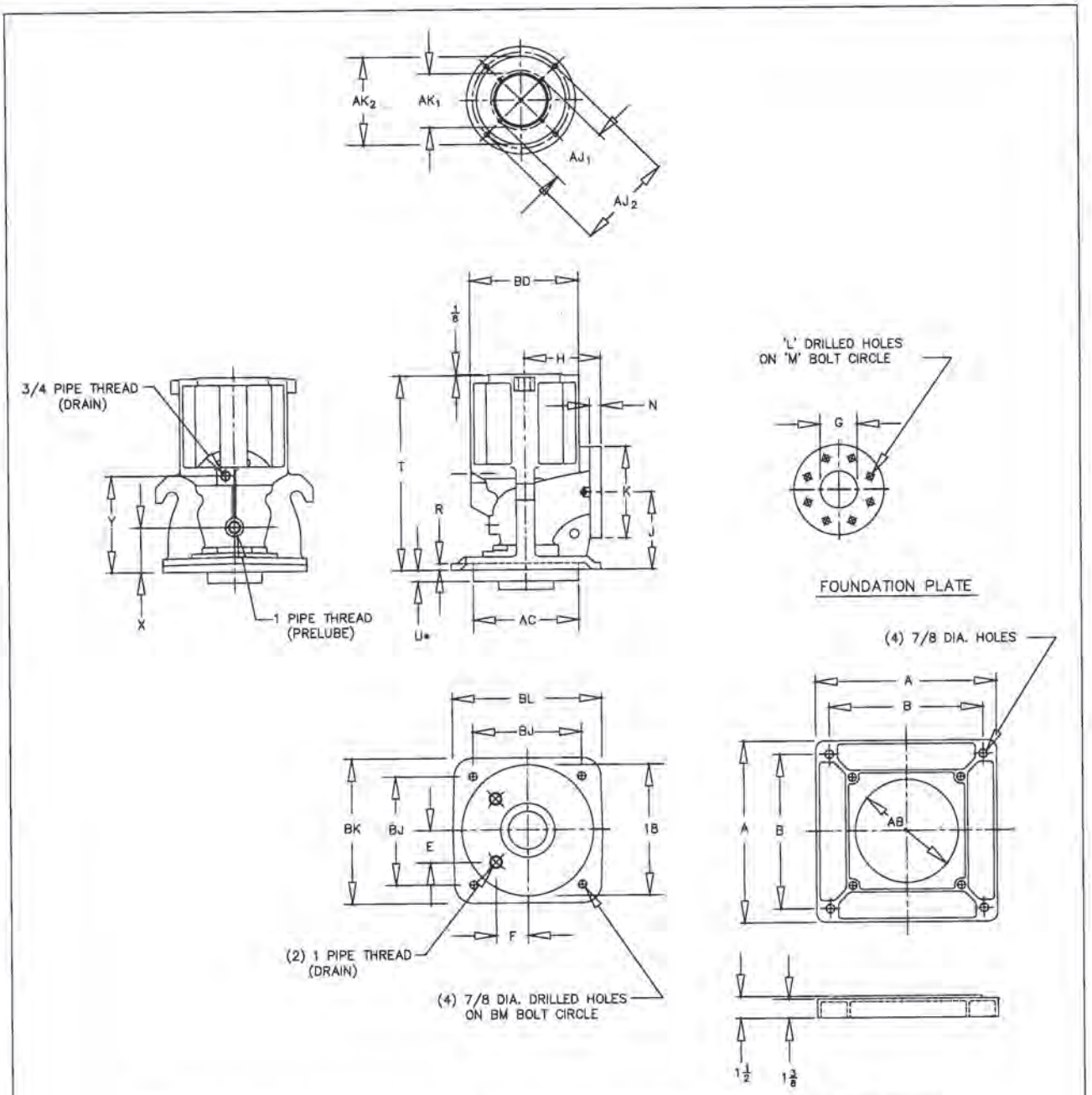

SIZE	FLANGE SIZE	A	B	E	F	G	H	J	K	L	M	N	R	T	U	X	Y	AB	AC	AJ_1	AK_1
16 1/2 X 6	6	24	21	3 3/8	5 3/4	6 1/8	10 1/4	8 1/2	11 1/8	(8) 7/8	9 1/2	1 1/8	7/8	21 1/2	1 1/4*	5	11 1/8	17 1/8	14 3/4	9 1/8	8 1/4
16 1/2 X 8	8	24	21	3 3/8	5 3/4	8 1/8	11 3/8	8 5/8	13 5/8	(8) 7/8	11 3/4	1 1/4	7/8	21 1/2	1 1/4*	5	11 1/8	17 1/8	14 3/4	9 1/8	8 1/4
20 X 10	10	24	21	3 3/8	5 3/4	10 1/8	13 7/8	9	16 1/8	(12) 1	14 1/4	1 1/4	7/8	21 1/2	1 1/4*	4 3/8	11 1/8	17 1/8	14 3/4	NA	8 1/4

SIZE	AJ_2	AK_2	BD	BJ	BK	BL	BM
16 1/2 X 6	14 3/4	13 1/2	16 1/2	16 3/4	20	20 1/2	23 3/4
16 1/2 X 8	14 3/4	13 1/2	16 1/2	16 3/4	20	20 1/2	23 3/4
20 X 10	14 3/4	13 1/2	20	16 3/4	20	20 1/2	23 3/4

OPTIONAL 250 LB. FLANGES	FLANGE SIZE	K	L	M	N
	6	12 5/8	(12) 7/8	10 5/8	3/4
	8	15 1/8	(12) 1**	13	1 3/4
	10	17 5/8	(16) 1/8	15 1/4	2

*U=3" WITH 10" COLUMN AND 9 3/4" WITH 12" COLUMN
** BOTTOM 2 HOLES ARE TAPPED 7/8 – 9 UNC THROUGH

Layne/Verti-Line
Pentair Water

TYPE "LAD" SURFACE HEAD

DWG. NO. 1100DM002 | REV

CLARKE®

FIRE PUMP ENGINES

MODELS

JU6H-UFADM8 JU6H-UFADMG JU6H-UFAD58 JU6H-UFADNG JU6H-UFADN0 JU6H-UFADP0 JU6H-UFADP8 JU6H-UFADQ0 JU6H-UFAD88 JU6H-UFADR0 JU6H-UFADR8 JU6H-UFADS8 JU6H-UFADS0 JU6H-UFADT0 JU6H-UFADW8 JU6H-UFADX8 JU6H-UFAD98

FM-UL-cUL APPROVED RATINGS BHP/*KW*

JU6H MODEL ♦	RATED SPEED 1760		2100		2350		2400		US-EPA (NSPS) Available Until ●
UFADM8	175	*131*							*No Expiration*
UFADMG			175	*131*	175	*131*			*No Expiration*
UFAD58	183	*137*							*No Expiration*
UFADNG	190	*142*	181	*135*	183	*137*	183	*137*	*No Expiration*
UFADN0	197	*147*	197	*147*	200	*149*	200	*149*	*No Expiration*
UFADP0	220	*164*	209	*156*	211	*157*	211	*157*	*No Expiration*
UFADP8	220	*164*							*No Expiration*
UFADQ0			224	*167*	226	*169*	226	*169*	*No Expiration*
UFAD88	237	*177*							*No Expiration*
UFADR0			238	*177.5*	240	*179*	240	*179*	*No Expiration*
UFADR8	250	*187*							*No Expiration*
UFADS8	260	*194*							*No Expiration*
UFADS0			260	*194*	268	*200*	268	*200*	*No Expiration*
UFADT0	229	*171*	274	*204*	275	*205*	275	*205*	*No Expiration*
UFADW8	282	*211*							*No Expiration*
UFADX8	305	*227.5*							*No Expiration*
UFAD98	315	*235*							*No Expiration*

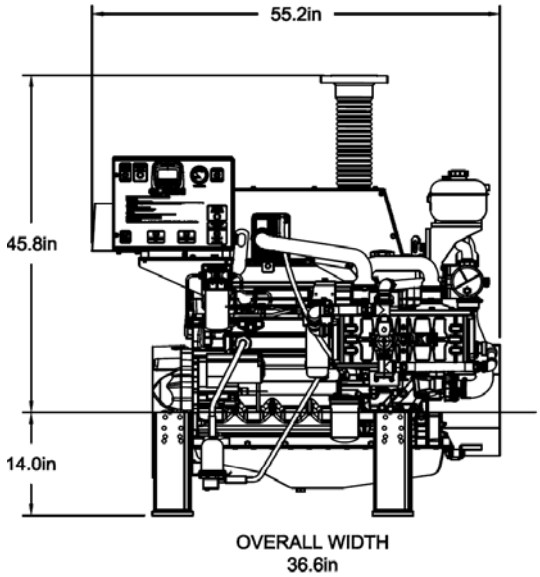

● USA EPA (NSPS) Tier 3 Emissions Certified Off-Road (40 CFR Part 89) and NSPS Stationary (40 CFR Part 60 Sub Part IIII). Meet EU Stage IIIA emission levels.

♦ All Models available for Export

SPECIFICATIONS

ITEM	JU6H MODELS M8	MG	58	NG	N0	P8	88	P0	Q0	R0	S0	T0	R8	S8	W8	X8	98
Number of Cylinders	6																
Aspiration	TRWA																
Rotation*	CW																
Weight – lb (kg)	1747 (791)																
Compression Ratio	19.0:1							17.0:1									
Displacement – cu. in. (L)	415 (6.8)																
Engine Type	4 Stroke Cycle – Inline Construction																
Bore & Stroke – in. (mm)	4.19 x 5.00 (106 x 127)																
Installation Drawing	D628																
Wiring Diagram AC	C07591																
Wiring Diagram DC	C071367, C071360, C071361							C071368, C071360, C071761									
Engine Series	John Deere 6068 Series Power Tech E							John Deere 6068 Series Power Tech Plus									
Speed Interpolation	N/A																

Abbreviations: CW – Clockwise TRWA – Turbocharged with Raw Water Aftercooling N/A - Not Available

*Rotation viewed from Heat Exchanger / Front of engine

CERTIFIED POWER RATING

- Each engine is factory tested to verify power and performance.
- FM-UL power ratings are shown at specific speeds, Clarke engines can be applied at a single rated RPM setting ± 50 RPM.

ENGINE RATINGS BASELINES

- Engines are to be used for stationary emergency standby fire pump service only. Engines are to be tested in accordance with NFPA 25.
- Engines are rated at standard SAE conditions of 29.61 in. (752.1 mm) Hg barometer and 77°F (25°C) inlet air temperature [approximates 300 ft. (91.4 m) above sea level] by the testing laboratory (see SAE Standard J 1349).
- A deduction of 3 percent from engine horsepower rating at standard SAE conditions shall be made for diesel engines for each 1000 ft. (305 m) altitude above 300 ft. (91.4 m)
- A deduction of 1 percent from engine horsepower rating as corrected to standard SAE conditions shall be made for diesel engines for every 10°F (5.6°C) above 77°F (25°C) ambient temperature.

c UL us

Meets NFPA 20 Requirements

FM APPROVED

MODELS

JU6H-UFADM8
JU6H-UFADMG
JU6H-UFADK0
JU6H-UFAD58
JU6H-UFADNG
JU6H-UFADN0
JU6H-UFADP0
JU6H-UFADP8
JU6H-UFADQ0
JU6H-UFAD88
JU6H-UFADR0
JU6H-UFADR8
JU6H-UFADS8
JU6H-UFADS0
JU6H-UFADT0
JU6H-UFADW8
JU6H-UFADX8
JU6H-UFAD98

ENGINE EQUIPMENT

EQUIPMENT	STANDARD	OPTIONAL
Air Cleaner	Direct Mounted, Washable, Indoor Service with Drip Shield	Disposable, Drip Proof, Indoor Service Outdoor Type, Single or Two Stage
Alternator	12V-DC, 42 Amps with Poly-Vee Belt and Guard	24V-DC, 40 Amps with Poly-Vee Belt and Guard
Exhaust Protection	Metal Guards on Manifolds and Turbocharger	
Coupling	Bare Flywheel	UL Listed Driveshaft and Guard, JU6H-UFAD58/NG/ADMG/ADM8/K0/N0/Q0/R0-CDS30-S1; JU6H-UFADP8/P0/T0/88/R8/S8/S0/W8/X8/98- CDS50-SC at 1760/2100 RPM only
Electronic Control Module	12V-DC, Energized to Stop, Primary ECM always Powered on	24V-DC, Energized to Stop, Primary ECM always Powered on
Exhaust Flex Connection*	Stainless Steel Flex, 150# ANSI Flanged Connection, 5" for JU6H-UFAD58/M8/MG/K0/NG/N0/P8/88; Stainless Steel Flex, 150# ANSI Flanged Connection, 6" for JU6H-UFADP0/Q0/R0/S0/T0/R8/S8/W8/X8/98	Stainless Steel Flex, 150# ANSI Flanged Connection, 6" for JU6H-UFAD58/M8/MG/K0/NG/N0/P8/88; Stainless Steel Flex, 150# ANSI Flanged Connection, 8" for JU6H-UFADP0/Q0/R0/S0/T0/R8/S8/W8/X8/98
Flywheel Housing	SAE #3	
Flywheel Power Take Off	11.5" SAE Industrial Flywheel Connection	
Fuel Connections	Fire Resistant, Flexible, USA Coast Guard Approved, Supply and Return Lines	Stainless Steel, Braided, cUL Listed, Supply and Return Lines
Fuel Filter	Primary Filter with Priming Pump	
Fuel Injection System	High Pressure Common Rail	
Engine Heater	115V-AC, 1360 Watt	230V-AC, 1360 Watt
Governor, Speed	Dual Electronic Control Modules	
Heat Exchanger	Tube and Shell Type, 60 PSI (4 BAR), NPT(F) Connections – Sea/Salt Water Compatible	
Instrument Panel	Multimeter to Display English and Metric, Tachometer, Hourmeter, Water Temperature, Oil Pressure and One (1) Voltmeter with Toggle Switch, Front Opening	
Junction Box	Integral with Instrument Panel; For DC Wiring Interconnection to Engine Controller	
Lube Oil Cooler	Engine Water Cooled, Plate Type	
Lube Oil Filter	Full Flow with By-Pass Valve	
Lube Oil Pump	Gear Driven, Gear Type	
Manual Start Control	On Instrument Panel with Control Position Warning Light	
Overspeed Control	Electronic, Factory Set, Not Field Adjustable	
Raw Water Solenoid Operation	Automatic from Fire Pump Controller and from Engine Instrument Panel	
Run – Stop Control	On Instrument Panel with Control Position Warning Light	
Starters	Two (2) 12V-DC	Two (2) 24V-DC
Throttle Control	Adjustable Speed Control by Increase/Decrease Button, Tamper Proof in Instrument Panel	
Water Pump	Centrifugal Type, Poly-Vee Belt Drive with Guard	

Abbreviations : DC – Direct Current, AC – Alternating Current, SAE – Society of Automotive Engineers, NPT(F) – National Pipe Tapered Thread (Female), ANSI – American National Standards Institute

*JU6H-UFADP8/P0/Q0/R0/S0/T0/R8/S8/W8/X8/98 – All provided with orifice plate mounted in flex exhaust.

Note: Engine Controller needs 2 additional signals: Injector Failure, Alternate ECM Selected

MODEL NOMENCLATURE: (10 Digit Models)

JU6H - UFADR0

- John Deere Base Engine
- 350 Series
- 6 Cylinders
- Heat Exchanger Cooled
- UL Listed
- FM Approved
- Built in USA
- EPA Tier 3 Certified
- Power Curve Number

CLARKE®

CLARKE Fire Protection Products, Inc.
3133 E. Kemper Rd., Cincinnati, Ohio 45241
United States of America
Tel +1-513-475-FIRE(3473) Fax +1-513-771-0726
www.clarkefire.com

CLARKE UK, Ltd.
Grange Works, Lomond Rd., Coatbridge, ML5-2NN
United Kingdom
Tel +44-1236-429946 Fax +44-1236-427274
www.clarkefire.com

C133421 revM
08MAY12

Specifications and information contained in this brochure subject to change without notice.

CLARKE
Fire Protection Products, Inc.

JU6H-UFAD98
INSTALLATION & OPERATION DATA (I&O Data)
USA Produced

Basic Engine Description

Engine Manufacturer	John Deere Co.
Ignition Type	Compression (Diesel)
Number of Cylinders	6
Bore and Stroke - in (mm)	4.19 (106) X 5 (127)
Displacement - in³ (L)	415 (6.8)
Compression Ratio	17.0:1
Valves per cylinder	
Intake	2
Exhaust	2
Combustion System	Direct Injection
Engine Type	In-Line, 4 Stroke Cycle
Fuel Management Control	Electronic, High Pressure Common Rail
Firing Order (CW Rotation)	1-5-3-6-2-4
Aspiration	Turbocharged
Charge Air Cooling Type	Raw Water
Rotation, viewed from front of engine, Clockwise (CW)	Standard
Engine Crankcase Vent System	Open
Installation Drawing	D628
Weight - lb (kg)	1747 (792)

Power Rating	**1760**
Nameplate Power - HP (kW)	315 (235)

Cooling System - [C051386]	**1760**
Engine Coolant Heat - Btu/sec (kW)	101.5 (107)
Engine Radiated Heat - Btu/sec (kW)	71 (74.9)
Heat Exchanger Minimum Flow	
60°F (15°C) Raw H_20 - gal/min (L/min)	32 (121)
95°F (35°C) Raw H_20 - gal/min (L/min)	43 (163)
Heat Exchanger Maximum Cooling Raw Water	
Inlet Pressure - psi (bar)	60 (4.1)
Flow - gal/min (L/min)	40 (151)
Typical Engine H_20 Operating Temp - °F (°C)[1]	180 (82.2) - 195 (90.6)
Thermostat	
Start to Open - °F (°C)	180 (82.2)
Fully Opened - °F (°C)	203 (95)
Engine Coolant Capacity - qt (L)	22.2 (21)
Coolant Pressure Cap - lb/in² (kPa)	15 (103)
Maximum Engine Coolant Temperature - °F (°C)	230 (110)
Minimum Engine Coolant Temperature - °F (°C)	160 (71.1)
High Coolant Temp Alarm Switch - °F (°C)[2]	235 (113) - 241 (116)

Electric System - DC	**Standard**		**Optional**	
System Voltage (Nominal)	12		24	
Battery Capacity for Ambients Above 32°F (0°C)				
Voltage (Nominal)	12	[C07633]	24	[C07633]
Qty. Per Battery Bank	1		2	
SAE size per J537	8D		8D	
CCA @ 0°F (-18°C)	1400		1400	
Reserve Capacity - Minutes	430		430	
Battery Cable Circuit, Max Resistance - ohm	0.0012		0.0012	
Battery Cable Minimum Size				
0-120 in. Circuit Length[3]	00		00	
121-160 in. Circuit Length[3]	000		000	
161-200 in. Circuit Length[3]	0000		0000	
Charging Alternator Maximum Output - Amp,	40	[C071363]	55	[C071365]
Starter Cranking Amps, Rolling - @60°F (15°C)	440	[RE69704/RE70404]	250	[C07819/C07820]

NOTE: This engine is intended for indoor installation or in a weatherproof enclosure. [1]Engine H_2O temperature is dependent on raw water temperature and flow. [2]High Coolant Switch threshold varies with engine load. [3]Positive and Negative Cables Combined Length.

CLARKE
Fire Protection Products, Inc.

JU6H-UFAD98
INSTALLATION & OPERATION DATA (I&O Data)
USA Produced

Exhaust System	**1760**
Exhaust Flow - ft.³/min (m³/min)	1400 (39.6)
Exhaust Temperature - °F (°C)	961 (516)
Maximum Allowable Back Pressure - in H_20 (kPa)	30 (7.5)
Minimum Exhaust Pipe Dia. - in (mm)[4]	6 (152)

Fuel System	**1760**
Fuel Consumption - gal/hr (L/hr)	15 (56.8)
Fuel Return - gal/hr (L/hr)	21.3 (80.6)
Fuel Supply - gal/hr (L/hr)	36.3 (137)
Fuel Pressure - lb/in² (kPa)	3 (20.7) - 6 (41.4)
Minimum Line Size - Supply - in.	.50 Schedule 40 Steel Pipe
Pipe Outer Diameter - in (mm)	0.848 (21.5)
Minimum Line Size - Return - in.	.375 Schedule 40 Steel Pipe
Pipe Outer Diameter - in (mm)	0.675 (17.1)
Maximum Allowable Fuel Pump Suction Lift with clean Filter - in H_20 (mH_20)	80 (2)
Maximum Allowable Fuel Head above Fuel pump, Supply or Return - ft (m)	6.6 (2)
Fuel Filter Micron Size	2 (Secondary)

Heater System	**Standard**	**Optional**
Engine Coolant Heater		
Wattage (Nominal)	1360	1360
Voltage - AC, 1 Phase	115 (+5% -10%)	230 (+5%, -10%)
Part Number	[C123640]	[C123644]

Air System	**1760**	
Combustion Air Flow - ft.³/min (m³/min)	547 (15.5)	
Air Cleaner	**Standard**	**Optional**
Part Number	[C03244]	[C03327]
Type	Indoor Service Only, with Shield	Canister, Single-Stage
Cleaning method	Washable	Disposable
Air Intake Restriction Maximum Limit		
Dirty Air Cleaner - in H_20 (kPa)	14 (3.5)	10 (2.5)
Clean Air Cleaner - in H_20 (kPa)	7 (1.7)	5 (1.2)
Maximum Allowable Temperature (Air To Engine Inlet) - °F (°C)[5]	130 (54.4)	

Lubrication System	
Oil Pressure - normal - lb/in² (kPa)	40 (276) - 60 (414)
Low Oil Pressure Alarm Switch - lb/in² (kPa)[6]	30 (207) to 35 (241)
In Pan Oil Temperature - °F (°C)	220 (104) - 245 (118)
Total Oil Capacity with Filter - qt (L)	34.3 (32.5)

Lube Oil Heater	**Optional**	**Optional**
Wattage (Nominal)	150	150
Voltage	120V (+5%, -10%)	240V (+5%, -10%)
Part Number	C04430	C04431

Performance	**1760**
BMEP - lb/in² (kPa)	342 (2360)
Piston Speed - ft/min (m/min)	1467 (447)
Mechanical Noise - dB(A) @ 1m	C133381
Power Curve	C132618

[4]Based on Nominal System. Back pressure flow analysis must be done to assure maximum allowable back pressure is not exceeded. (Note: minimum exhaust Pipe diameter is based on: 15 feet of pipe, one 90° elbow, and a silencer pressure drop no greater than one half of the maximum allowable back pressure.) [5]Review for horsepower derate if ambient air entering engine exceeds 77°F (25°C). [6]Low Oil Pressure Switch threshold varies w/engine speed. [ ] indicates component reference part number.

JU4H & JU6H ENGINE MODELS
ENGINE MATERIALS AND CONSTRUCTION

Air Cleaner
Type……..……. ..Indoor Usage Only
Oiled Fabric Pleats
Material…….……. Surgical Cotton
Aluminum Mesh

Air Cleaner - Optional
Type……Canister
Material……Pleated Paper
Housing……..……Enclosed

Camshaft
Material……Cast Iron
Chill Hardened
Location……..……In Block
Drive……..Gear, Spur
Type of Cam……..…... Ground

Charge Air Cooler (JU6H-60,62,68,74,84, ADK0, AD58, ADNG, ADN0, ADQ0, ADR0, AAQ8, AARG, ADP8, ADP0, ADT0, AD88, ADR8, AD98, ADS0, ADW8, ADX8, AD98 only)
Type……Raw Water Cooled

Materials (in contact with raw water)
Tubes…… …… 90/10 CU/NI
Headers …… 36500 Muntz
Covers …… 83600 Red Brass
Plumbing …… 316 Stainless Steel/ Brass
90/10 Silicone

Coolant Pump
Type……Centrifugal
Drive…… …… Poly Vee Belt

Coolant Thermostat
Type……Non Blocking
Qty……1

Connecting Rod
Type……I-Beam Taper
Material……Forged Steel Alloy

Crank Pin Bearings
Type……Precision Half Shell
Number……1 Pair Per Cylinder
Material……Wear-Guard

Crankshaft
Material……Forged Steel
Type of Balance……Dynamic

Cylinder Block
Type……One Piece with
Non-Siamese Cylinders
Material……Annealed Gray Iron

Cylinder Head
Type…….. …… Slab 2 Valve
Material…… Annealed Gray Iron

Cylinder Liners
Type…….. …… Centrifugal Cast, Wet Liner
Material…….…… Alloy Iron Plateau, Honed

Valves
Type…….. ……Poppet
Arrangement…… …..Overhead Valve
Number/Cylinder……1 intake
1 exhaust
Operating Mechanism…..Mechanical Rocker Arm
Type of Lifter……..Large Head
Valve Seat Insert……Replaceable

Fuel Pump
Type……Diaphragm
Drive…… Cam Lobe

Heat Exchanger (USA)
Type……Tube & Shell
Materials
Tube& Headers…… Copper
Shell……Copper
Electrode……Zinc

Heat Exchanger (UK)
Type……Tube & Bundle
Materials
Tube& Headers…… Copper
Shell…… Aluminum

Injection Pump
Type……Rotary
Drive…… Gear

Lubrication Cooler
Type……Plate

Lubrication Pump
Type……Gear
Drive…… Gear

Main Bearings
Type……Precision Half Shells
Material……Steel Backed-Aluminum Lined

Piston
Type and Material…… Aluminum Alloy with Reinforced
Top Ring Groove
Cooling…… Oil Jet Spray

Piston Pin
Type……Full Floating - Offset

Piston Rings
Number/Piston……3
Top…… Keystone Barrel Faced -
Plasma Coated
Second…… Tapered Cast Iron
Third……Double Rail Type
w/Expander Spring

CLARKE

www.clarkefire.com **Fire Protection Products**

JU6H-UFAD98

FIRE PUMP DRIVER

NOISE DATA

Mechanical Engine Noise *

RPM	BHP	OVERALL dB(A)	Octave Band 31.5 Hz dB(A)	63 Hz dB(A)	125 Hz dB(A)	250 Hz dB(A)	500 Hz dB(A)	1k Hz dB(A)	2k Hz dB(A)	4k Hz dB(A)	8k Hz dB(A)	16k Hz dB(A)
1760	315	109.2	67.0	69.2	82.6	89.2	97.1	99.7	104.9	103.4	101.7	101.7

Raw Exhaust Engine Noise **

RPM	BHP	OVERALL dB(A)	Octave Band 31.5 Hz dB(A)	63 Hz dB(A)	125 Hz dB(A)	250 Hz dB(A)	500 Hz dB(A)	1k Hz dB(A)	2k Hz dB(A)	4k Hz dB(A)	8k Hz dB(A)	16k Hz dB(A)
1760	315	112.1		101.8	106.2	100.9	103.1	102.7	109.4	103.6	92.3	85.8

** Values above are provided at 3.3ft (1m) from engine block and do **not** include the raw exhaust noise.*

*** Values above are provided at 23ft (7m), 90° horizontal, from a vertically directed engine exhaust outlet with a 24" straight pipe attachment and does not include mechanical engine noise.*

The above data reflects values for a typical engine of this model, speed and power in a free-field environment.

Installation specifics such as background noise level and amplification of noise levels from reflecting off of surrounding objects, will affect the overall noise levels observed. As a result of this, Clarke makes no guarantees to the above levels in an actual installation.

Rating Specific Emissions Data - John Deere Power Systems

JOHN DEERE

Nameplate Rating Information	
Clarke Model	JU6H-UFAD98
Power Rating (BHP / kW)	315 / 235
Certified Speed (RPM)	1760

Rating Data		
Rating	6068HFC48A	
Certified Power (kW)	235	
Rated Speed	1760	
Vehicle Model Number	Clarke Fire Pump	
Units	g/kW-hr	g/hp-hr
NOx	3.6	2.7
HC	0.1	0.1
NOx + HC	3.7	2.8
Pm	0.07	0.06
CO	0.6	0.4

Certificate Data	
Engine Model Year	2012
EPA Family Name	CJDXL13.5103
EPA JD Name	650HAA
EPA Certificate Number	CJDXL13.5103-020
CARB Executive Order	Not Applicable
Parent of Family	6135HF485A
Units	g/kW-hr
NOx	3.3
HC	0.1
NOx + HC	3.4
Pm	0.10
CO	0.6

* The emission data listed is measured from a laboratory test engine according to the test procedures of 40 CFR 89 or 40 CFR 1039, as applicable. The test engine is intended to represent nominal production hardware, and we do not guarantee that every production engine will have identical test results. The family parent data represents multiple ratings and this data may have been collected at a different engine speed and load. Emission results may vary due to engine manufacturing tolerances, engine operating conditions, fuels used, or other conditions beyond our control.

This information is property of Deere & Company. It is provided solely for the purpose of obtaining certification or permits of Deere powered equipment. Unauthorized distribution of this information is prohibited

ATTACHMENT C: FORM FRA – FIRE PUMP ENGINE

DEQ AIR QUALITY PROGRAM
1410 N. Hilton, Boise, ID 83706
For assistance, call the
Air Permit Hotline – 1-877-5PERMIT

AIR PERMIT APPLICATION

Revision 6
10/7/09

For each box in the table below, CTRL+click on the blue underlined text for instructions and information.

IDENTIFICATION	
1. Company Name:	2. Facility Name:
Idahoan Foods, LLC	Idaho Falls Facility
3. Brief Project Description:	Replacing three proctors with two fluid bed dryers and adding a drum dryer

APPLICABILITY DETERMINATION	
4. List applicable subparts of the New Source Performance Standards (NSPS) (40 CFR part 60). Examples of NSPS affected emissions units include internal combustion engines, boilers, turbines, etc. The applicant must thoroughly review the list of affected emissions units.	List of applicable subpart(s): 40 CFR Part 60 Subpart IIII ☐ Not Applicable
5. List applicable subpart(s) of the National Emission Standards for Hazardous Air Pollutants (NESHAP) found in 40 CFR part 61 and 40 CFR part 63. Examples of affected emission units include solvent cleaning operations, industrial cooling towers, paint stripping and miscellaneous surface coating. EPA has a web page dedicated to NESHAP that should be useful to applicants.	List of applicable subpart(s): 40 CFR Part 63 Subpart ZZZZ ☐ Not Applicable
6. For each subpart identified above, conduct a complete a regulatory analysis using the instructions and referencing the example provided on the following pages. **Note** - Regulatory reviews must be submitted with sufficient detail so that DEQ can verify applicability and document in legal terms why the regulation applies. Regulatory reviews that are submitted with insufficient detail will be determined incomplete.	☑ A detailed regulatory review is provided (Follow instructions and example). ☐ DEQ has already been provided a detailed regulatory review. Give a reference to the document including the date.

IF YOU ARE UNSURE HOW TO ANSWER ANY OF THESE QUESTIONS, CALL THE AIR PERMIT HOTLINE AT 1-877-5PERMIT

It is emphasized that it is the applicant's responsibility to satisfy all technical and regulatory requirements, and that DEQ will help the applicant understand what those requirements are prior to the application being submitted but that DEQ will not perform the required technical or regulatory analysis on the applicant's behalf.

Instructions for Form FRA

.

Item 4 & 5. It is important that facilities review the most recent federal regulations when submitting their permit application to DEQ. Current federal regulations can be found at the following Web site: http://ecfr.gpoaccess.gov/cgi/t/text/text-idx?&c=ecfr&tpl=/ecfrbrowse/Title40/40tab_02.tpl.

Item 6. For each applicable subpart identified under items 4-5 conduct a complete regulatory analysis. The facility must follow the procedure given below or obtain permission from DEQ to provide the necessary information using an alternative procedure:

1. Retrieve a TEXT or PDF copy of the applicable federal regulation subpart(s) online at http://www.gpoaccess.gov/cfr/retrieve.html

2. Copy and paste the regulation(s) into your DEQ air permit application.

3. Highlight or underline sections in the regulation(s) that are applicable to the source(s).

4. Under each section of the subpart, explain why the source is subject to the section, or why the source is not subject to the section. When providing the explanation use a different font than the regulation (i.e***. bold, italic***) so that it is easy for the reader to determine the text that the applicant has provided. An example NSPS regulatory analysis is attached. The applicant must provide all necessary information needed to determine applicability. If information is lacking or the analysis is incomplete the application will be determined incomplete.

   EPA provides a web site dedicated to NSPS/NESHAP applicability determinations that may be useful to applicants. Follow this link to the applicability determination index Clean Air Act Applicability Determination Index - Compliance Monitoring - EPA. Another useful source of information is the preamble to the regulation which is published in the Federal Register on the date the regulation was promulgated. Federal Registers may be found online at Federal Register: Main Page. The date the regulation was published in the Federal Register is included in the footnotes of the regulation.

5. DEQ will assist in identifying the applicable requirements that the applicant must include in the application but will not perform the required technical or regulatory analysis on the applicant's behalf. Applicants should contact the Air Quality Permit Hotline (1-877-573-7648) to discuss NSPS/NESHAP regulatory analysis requirements or to schedule a meeting.

6. It also benefits facilities to document a non-applicability determination on federal air regulations which appear to apply to the facility but actually do not. A non-applicability determination will avoid future confusion and expedite the air permit application review. If you conduct an applicability determination and find that your activity is not NSPS or NESHAP affected facility an analysis should be submitted using the methods described above.

7. **It is not sufficient to simply provide a copy of the NSPS or NESHAP. The applicant must address each section of the regulation as described above and as shown in the example that is provided.**

EXAMPLE OF A NSPS REGULATORY ANALYSIS

[Title 40, Volume 6]
[Revised as of July 1, 2008]
From the U.S. Government Printing Office via GPO Access
[CITE: 40CFR60]

TITLE 40--PROTECTION OF ENVIRONMENT

CHAPTER I--ENVIRONMENTAL PROTECTION AGENCY (CONTINUED)

PART 60_STANDARDS OF PERFORMANCE FOR NEW STATIONARY SOURCES--
Table of Contents

Subpart H_Standards of Performance for Sulfuric Acid Plants

Sec.60.80 Applicability and designation of affected facility.

(a) The provisions of this subpart are applicable to each sulfuric acid production unit, which is the affected facility.
(b) Any facility under paragraph (a) of this section that commences construction or modification after August 17, 1971, is subject to the requirements of this subpart.

ACME Chemicals, Inc. is proposing to construct after August 17, 1971 a sulfuric acid plant which burns elemental sulfur as defined by 40 CFR 60.81(a). ACME is therefore affected by this subpart.

(Be sure to use the terms of the regulation to describe applicability; usually applicability is determined based on a specific date, definition of an affected facility, and rated input capacity. All of the applicability criteria must be addressed by the applicant.)

Note - if a determination of non-applicability is being submitted it is not necessary to address the remaining non-applicable regulatory sections. Be sure to provide the applicability determination in terms of the regulation (i.e. construction/modification date, rated input capacity, definition of affected facility).

Sec.60.81 Definitions.

As used in this subpart, all terms not defined herein shall have the meaning given them in the Act and in subpart A of this part.
(a) Sulfuric acid production unit means any facility producing sulfuric acid by the contact process by burning elemental sulfur, alkylation acid, hydrogen sulfide, organic sulfides and mercaptans, or acid sludge, but does not include facilities where conversion to sulfuric acid is utilized primarily as a means of preventing emissions to the atmosphere of sulfur dioxide or other sulfur compounds.
(b) Acid mist means sulfuric acid mist, as measured by Method 8 of appendix A to this part or an equivalent or alternative method.

ACME Chemicals, Inc. has read and understands these definitions and used them in providing this regulatory analysis.

Sec.60.82 Standard for sulfur dioxide.

(a) On and after the date on which the performance test required to be conducted by Sec.60.8 is completed, no owner or operator subject to the provisions of this subpart shall cause to be discharged into the atmosphere from any affected facility any gases which contain sulfur dioxide in excess of 2 kg per metric ton of acid produced (4 lb per ton), the production being expressed as 100 percent H2/SO4/.

ACME Chemicals, Inc. is subject to this standard and has provided a documented emission inventory (or manufacturer guarantee) which shows compliance.

Sec.60.83 Standard for acid mist.

(a) On and after the date on which the performance test required to be conducted by Sec.60.8 is completed, no owner or operator subject to the provisions of this subpart shall cause to be discharged into the atmosphere from any affected facility any gases which:

(1) Contain acid mist, expressed as H2/SO4/, in excess of 0.075 kg per metric ton of acid produced (0.15 lb per ton), the production being expressed as 100 percent H2/SO4/.

ACME Chemicals, Inc. is subject to this standard and has provided a documented emission inventory (or manufacturer guarantee) which shows compliance.

(2) Exhibit 10 percent opacity, or greater.

ACME Chemicals, Inc. understands that this will become a permit condition and has supplied a manufacturer guarantee that the sulfuric acid plant will comply with this standard.

Sec.60.84 Emission monitoring.

(a) A continuous monitoring system for the measurement of sulfur dioxide shall be installed, calibrated, maintained, and operated by the owner or operator. The pollutant gas used to prepare calibration gas mixtures under Performance Specification 2 and for calibration checks under Sec.60.13(d), shall be sulfur dioxide (SO2/). Method 8 shall be used for conducting monitoring system performance evaluations under Sec.60.13(c) except that only the sulfur dioxide portion of the Method 8 results shall be used. The span value shall be set at 1000 ppm of sulfur dioxide.

(b) The owner or operator shall establish a conversion factor for the purpose of converting monitoring data into units of the applicable standard (kg/metric ton, lb/ton). The conversion factor shall be determined, as a minimum, three times daily by measuring the concentration of sulfur dioxide entering the converter using suitable methods (e.g., the Reich test, National Air Pollution Control Administration Publication No. 999-AP-13) and calculating the appropriate conversion factor for each eight-hour period as follows:

CF=k[(1.000-0.015r)/(r-s)]

where:

CF=conversion factor (kg/metric ton per ppm, lb/ton per ppm).
k=constant derived from material balance. For determining CF in metric units, k=0.0653. For determining CF in English units, k=0.1306.
r=percentage of sulfur dioxide by volume entering the gas converter. Appropriate corrections must be made for air injection plants subject to the Administrator's approval.
s=percentage of sulfur dioxide by volume in the emissions to the atmosphere determined by the continuous monitoring system required under paragraph (a) of this section.

(c) The owner or operator shall record all conversion factors and values under paragraph (b) of this section from which they were computed (i.e., CF, r, and s).

ACME Chemicals, Inc. is not proposing to utilize Sections 60.84(a)-(c)listed above to monitor emissions. Instead ACME Chemicals is utilizing 40 CFR 60.84(d) listed below to monitor emissions of sulfur dioxide.

(d) Alternatively, a source that processes elemental sulfur or an ore that contains elemental sulfur and uses air to supply oxygen may use the following continuous emission monitoring approach and calculation procedures in determining SO2/ emission rates in terms of the standard. This procedure is not required, but is an alternative that would alleviate problems encountered in the measurement of gas velocities or production rate. Continuous emission monitoring systems for measuring SO2/, O2/, and CO2/ (if required) shall be installed, calibrated, maintained, and operated by the owner or operator and subjected to the certification procedures in Performance Specifications 2 and 3. The calibration procedure and span value for the SO2/ monitor shall be as specified in paragraph (b) of this section. The span value for CO2/ (if required) shall be 10 percent and for O2/ shall be 20.9 percent (air). A conversion factor based on process rate data is not necessary. Calculate the SO2/ emission rate as follows:

Es/=(Cs/ S)/[0.265-(0.126 %O2/)-(A
%CO2/)]

where:

Es/=emission rate of SO2/, kg/metric ton (lb/ton) of 100 percent of H2/SO4/ produced.
Cs/=concentration of SO2/, kg/dscm (lb/dscf).
S=acid production rate factor, 368 dscm/metric ton (11,800 dscf/ton) of 100 percent H2/SO4/ produced.
%O2/=oxygen concentration, percent dry basis.
A=auxiliary fuel factor,
=0.00 for no fuel.
=0.0226 for methane.
=0.0217 for natural gas.
=0.0196 for propane.
=0.0172 for No 2 oil.
=0.0161 for No 6 oil.
=0.0148 for coal.
=0.0126 for coke.
%CO2/= carbon dioxide concentration, percent dry basis.

Note: It is necessary in some cases to convert measured concentration units to other units for these calculations:

Use the following table for such conversions:

From--	To--	Multiply by--
g/scm.....	kg/scm.....	10-3
mg/scm.....	kg/scm.....	10-6
ppm (SO2).....	kg/scm.....	2.660x10-6
ppm (SO2).....	lb/scf.....	1.660x10-7

ACME Chemicals, Inc. has elected to use the monitoring requirements of the preceding section.

(e) For the purpose of reports under Sec.60.7(c), periods of excess emissions shall be all three-hour periods (or the arithmetic average of three consecutive one-hour periods) during which the integrated average sulfur dioxide emissions exceed the applicable standards under Sec.60.82.

ACME acknowledges that this section applies to the sulfuric acid plant.

Sec.60.85 Test methods and procedures.

(a) In conducting the performance tests required in Sec.60.8, the owner or operator shall use as reference methods and procedures the test methods in appendix A of this part or other methods and procedures as specified in this section, except as provided in Sec.60.8(b). Acceptable alternative methods and procedures are given in paragraph (c) of this section.

(b) The owner or operator shall determine compliance with the SO2/ acid mist, and visible emission standards in Sec. Sec. 60.82 and 60.83 as follows:

(1) The emission rate (E) of acid mist or SO2/ shall be computed for each run using the following equation:

E=(CQsd/)/(PK)

where:

E=emission rate of acid mist or SO2/ kg/metric ton (lb/ton) of 100 percent H2/SO4/ produced.
C=concentration of acid mist or SO2/, g/dscm (lb/dscf).
Qsd/=volumetric flow rate of the effluent gas, dscm/hr (dscf/hr).
P=production rate of 100 percent H2/SO4/, metric ton/hr (ton/hr).
K=conversion factor, 1000 g/kg (1.0 lb/lb).

(2) Method 8 shall be used to determine the acid mist and SO2/ concentrations (C's) and the volumetric flow rate (Qsd/) of the effluent gas. The moisture content may be considered to be zero. The sampling time and sample volume for each run shall be at least 60 minutes and 1.15 dscm (40.6 dscf).

(3) Suitable methods shall be used to determine the production rate (P) of 100 percent H2/SO4/ for each run. Material balance over the production system shall be used to confirm the production rate.

(4) Method 9 and the procedures in Sec.60.11 shall be used to determine opacity.

(c) The owner or operator may use the following as alternatives to

the reference methods and procedures specified in this section:

(1) If a source processes elemental sulfur or an ore that contains elemental sulfur and uses air to supply oxygen, the following procedure may be used instead of determining the volumetric flow rate and production rate:

(i) The integrated technique of Method 3 is used to determine the O2/ concentration and, if required, CO2/ concentration.

(ii) The SO2/ or acid mist emission rate is calculated as described in Sec.60.84(d), substituting the acid mist concentration for Cs/ as appropriate.

ACME Chemicals, Inc. acknowledges that performance tests shall be conducted as specified above.

Subpart ZZZZ—National Emissions Standards for Hazardous Air Pollutants for Stationary Reciprocating Internal Combustion Engines

Contents

WHAT THIS SUBPART COVERS

§ 63.6580 What is the purpose of subpart ZZZZ?
§ 63.6585 Am I subject to this subpart?
§ 63.6590 What parts of my plant does this subpart cover?
§ 63.6595 When do I have to comply with this subpart?

EMISSION AND OPERATING LIMITATIONS

§ 63.6600 What emission limitations and operating limitations must I meet if I own or operate a stationary RICE with a site rating of more than 500 brake HP located at a major source of HAP emissions?
§ 63.6601 What emission limitations must I meet if I own or operate a new or reconstructed 4SLB stationary RICE with a site rating of greater than or equal to 250 brake HP and less than or equal to 500 brake HP located at a major source of HAP emissions?
§ 63.6602 What emission limitations must I meet if I own or operate an existing stationary RICE with a site rating of equal to or less than 500 brake HP located at a major source of HAP emissions?
§ 63.6603 What emission limitations and operating limitations must I meet if I own or operate an existing stationary RICE located at an area source of HAP emissions?
§ 63.6604 What fuel requirements must I meet if I own or operate an existing stationary CI RICE?

GENERAL COMPLIANCE REQUIREMENTS

§ 63.6605 What are my general requirements for complying with this subpart?

TESTING AND INITIAL COMPLIANCE REQUIREMENTS

§ 63.6610 By what date must I conduct the initial performance tests or other initial compliance demonstrations if I own or operate a stationary RICE with a site rating of more than 500 brake HP located at a major source of HAP emissions?
§ 63.6611 By what date must I conduct the initial performance tests or other initial compliance demonstrations if I own or operate a new or reconstructed 4SLB SI stationary RICE with a site rating of greater than or equal to 250 and less than or equal to 500 brake HP located at a major source of HAP emissions?
§ 63.6612 By what date must I conduct the initial performance tests or other initial compliance demonstrations if I own or operate an existing stationary RICE with a site rating of less than or equal to 500 brake HP located at a major source of HAP emissions or an existing stationary RICE located at an area source of HAP emissions?
§ 63.6615 When must I conduct subsequent performance tests?
§ 63.6620 What performance tests and other procedures must I use?
§ 63.6625 What are my monitoring, installation, collection, operation, and maintenance requirements?
§ 63.6630 How do I demonstrate initial compliance with the emission limitations and operating limitations?

CONTINUOUS COMPLIANCE REQUIREMENTS

§ 63.6635 How do I monitor and collect data to demonstrate continuous compliance?
§ 63.6640 How do I demonstrate continuous compliance with the emission limitations and operating limitations?

NOTIFICATIONS, REPORTS, AND RECORDS

§ 63.6645 What notifications must I submit and when?
§ 63.6650 What reports must I submit and when?
§ 63.6655 What records must I keep?
§ 63.6660 In what form and how long must I keep my records?

OTHER REQUIREMENTS AND INFORMATION

§ 63.6665 What parts of the General Provisions apply to me?
§ 63.6670 Who implements and enforces this subpart?
§ 63.6675 What definitions apply to this subpart?
Table 1 a to Subpart ZZZZ of Part 63—Emission Limitations for Existing, New, and Reconstructed Spark Ignition, 4SRB Stationary RICE > 500 HP Located at a Major Source of HAP Emissions
Table 1 b to Subpart ZZZZ of Part 63—Operating Limitations for Existing, New, and Reconstructed Spark Ignition 4SRB Stationary RICE >500 HP Located at a Major Source of HAP Emissions and Existing Spark Ignition 4SRB Stationary RICE >500 HP Located at an Area Source of HAP Emissions
Table 2 a to Subpart ZZZZ of Part 63—Emission Limitations for New and Reconstructed 2SLB and Compression Ignition Stationary RICE >500 HP and New and Reconstructed 4SLB Stationary RICE ≥250 HP Located at a Major Source of HAP Emissions
Table 2 b to Subpart ZZZZ of Part 63— Operating Limitations for New and Reconstructed 2SLB and Compression Ignition Stationary RICE >500 HP Located at a Major Source of HAP Emissions, New and Reconstructed 4SLB Stationary RICE ≥250 HP Located at a Major Source of HAP Emissions, Existing Compression Ignition Stationary RICE >500 HP, and Existing 4SLB Stationary RICE >500 HP Located at an Area Source of HAP Emissions
Table 2 c to Subpart ZZZZ of Part 63—Requirements for Existing Compression Ignition Stationary RICE Located at a Major Source of HAP Emissions and Existing Spark Ignition Stationary RICE ≤ 500 HP Located at a Major Source of HAP Emissions
Table 2 d to Subpart ZZZZ of Part 63—Requirements for Existing Stationary RICE Located at Area Sources of HAP Emissions
Table 3 to Subpart ZZZZ of Part 63—Subsequent Performance Tests
Table 4 to Subpart ZZZZ of Part 63—Requirements for Performance Tests
Table 5 to Subpart ZZZZ of Part 63—Initial Compliance With Emission Limitations and Operating Limitations
Table 6 to Subpart ZZZZ of Part 63—Continuous Compliance With Emission Limitations, Operating Limitations, Work Practices, and Management Practices
Table 7 to Subpart ZZZZ of Part 63—Requirements for Reports
Table 8 to Subpart ZZZZ of Part 63—Applicability of General Provisions to Subpart ZZZZ.
Appendix A to Subpart ZZZZ of Part 63—XXX

SOURCE: 69 FR 33506, June 15, 2004, unless otherwise noted.

Back to Top

What This Subpart Covers

Back to Top

§ 63.6580 What is the purpose of subpart ZZZZ?

Subpart ZZZZ establishes national emission limitations and operating limitations for hazardous air pollutants (HAP) emitted from stationary reciprocating internal combustion engines (RICE) located at major and area sources of HAP emissions. This subpart also establishes requirements to demonstrate initial and continuous compliance with the emission limitations and operating limitations.

[73 FR 3603, Jan. 18, 2008]

Back to Top

§ 63.6585 Am I subject to this subpart?

Link to an amendment published at 78 FR 6700, January 30, 2013.

You are subject to this subpart if you own or operate a stationary RICE at a major or area source of HAP emissions, except if the stationary RICE is being tested at a stationary RICE test cell/stand.

(a) A stationary RICE is any internal combustion engine which uses reciprocating motion to convert heat energy into mechanical work and which is not mobile. Stationary RICE differ from mobile RICE in that a stationary RICE is not a non-road engine as defined at 40 CFR 1068.30, and is not used to propel a motor vehicle or a vehicle used solely for competition.

(b) A major source of HAP emissions is a plant site that emits or has the potential to emit any single HAP at a rate of 10 tons (9.07 megagrams) or more per year or any combination of HAP at a rate of 25 tons (22.68 megagrams) or more per year, except that for oil and gas production facilities, a major source of HAP emissions is determined for each surface site.

(c) An area source of HAP emissions is a source that is not a major source.

(d) If you are an owner or operator of an area source subject to this subpart, your status as an entity subject to a standard or other requirements under this subpart does not subject you to the obligation to obtain a permit under 40 CFR part 70 or 71, provided you are not required to obtain a permit under 40 CFR 70.3(a) or 40 CFR 71.3(a) for a reason other than your status as an area source under this subpart. Notwithstanding the previous sentence, you must continue to comply with the provisions of this subpart as applicable.

(e) If you are an owner or operator of a stationary RICE used for national security purposes, you may be eligible to request an exemption from the requirements of this subpart as described in 40 CFR part 1068, subpart C.

[69 FR 33506, June 15, 2004, as amended at 73 FR 3603, Jan. 18, 2008]

Idahoan Foods' (IFL) Idaho Falls Facility is an area source of HAP emissions. IFL operates one stationary RICE engine which is subject to the requirements of this subpart. As an area source, IFL is not required to obtain a part 70 or part 71 permit as a result of being subject to this rule.

Back to Top

§ 63.6590 What parts of my plant does this subpart cover?

Link to an amendment published at 78 FR 6700, January 30, 2013.

This subpart applies to each affected source.

(a) *Affected source.* An affected source is any existing, new, or reconstructed stationary RICE located at a major or area source of HAP emissions, excluding stationary RICE being tested at a stationary RICE test cell/stand.

(1) *Existing stationary RICE.*

(i) For stationary RICE with a site rating of more than 500 brake horsepower (HP) located at a major source of HAP emissions, a stationary RICE is existing if you commenced construction or reconstruction of the stationary RICE before December 19, 2002.

(ii) For stationary RICE with a site rating of less than or equal to 500 brake HP located at a major source of HAP emissions, a stationary RICE is existing if you commenced construction or reconstruction of the stationary RICE before June 12, 2006.

(iii) For stationary RICE located at an area source of HAP emissions, a stationary RICE is existing if you commenced construction or reconstruction of the stationary RICE before June 12, 2006.

(iv) A change in ownership of an existing stationary RICE does not make that stationary RICE a new or reconstructed stationary RICE.

(2) *New stationary RICE.* (i) A stationary RICE with a site rating of more than 500 brake HP located at a major source of HAP emissions is new if you commenced construction of the stationary RICE on or after December 19, 2002.

(ii) A stationary RICE with a site rating of equal to or less than 500 brake HP located at a major source of HAP emissions is new if you commenced construction of the stationary RICE on or after June 12, 2006.

(iii) A stationary RICE located at an area source of HAP emissions is new if you commenced construction of the stationary RICE on or after June 12, 2006.

(3) *Reconstructed stationary RICE.* (i) A stationary RICE with a site rating of more than 500 brake HP located at a major source of HAP emissions is reconstructed if you meet the definition of reconstruction in § 63.2 and reconstruction is commenced on or after December 19, 2002.

(ii) A stationary RICE with a site rating of equal to or less than 500 brake HP located at a major source of HAP emissions is reconstructed if you meet the definition of reconstruction in § 63.2 and reconstruction is commenced on or after June 12, 2006.

(iii) A stationary RICE located at an area source of HAP emissions is reconstructed if you meet the definition of reconstruction in § 63.2 and reconstruction is commenced on or after June 12, 2006.

(b) *Stationary RICE subject to limited requirements.* (1) An affected source which meets either of the criteria in paragraphs (b)(1)(i) through (ii) of this section does not have to meet the requirements of this subpart and of subpart A of this part except for the initial notification requirements of § 63.6645(f).

(i) The stationary RICE is a new or reconstructed emergency stationary RICE with a site rating of more than 500 brake HP located at a major source of HAP emissions.

(ii) The stationary RICE is a new or reconstructed limited use stationary RICE with a site rating of more than 500 brake HP located at a major source of HAP emissions.

(2) A new or reconstructed stationary RICE with a site rating of more than 500 brake HP located at a major source of HAP emissions which combusts landfill or digester gas equivalent to 10 percent or more of the gross heat input on an annual basis must meet the initial notification requirements of § 63.6645(f) and the requirements of §§ 63.6625(c), 63.6650(g), and 63.6655(c). These stationary RICE do not have to meet the emission limitations and operating limitations of this subpart.

(3) The following stationary RICE do not have to meet the requirements of this subpart and of subpart A of this part, including initial notification requirements:

(i) Existing spark ignition 2 stroke lean burn (2SLB) stationary RICE with a site rating of more than 500 brake HP located at a major source of HAP emissions;

(ii) Existing spark ignition 4 stroke lean burn (4SLB) stationary RICE with a site rating of more than 500 brake HP located at a major source of HAP emissions;

(iii) Existing emergency stationary RICE with a site rating of more than 500 brake HP located at a major source of HAP emissions;

(iv) Existing limited use stationary RICE with a site rating of more than 500 brake HP located at a major source of HAP emissions;

(v) Existing stationary RICE with a site rating of more than 500 brake HP located at a major source of HAP emissions that combusts landfill gas or digester gas equivalent to 10 percent or more of the gross heat input on an annual basis;

(vi) Existing residential emergency stationary RICE located at an area source of HAP emissions;

(vii) Existing commercial emergency stationary RICE located at an area source of HAP emissions; or

(viii) Existing institutional emergency stationary RICE located at an area source of HAP emissions.

(c) *Stationary RICE subject to Regulations under 40 CFR Part 60.* An affected source that meets any of the criteria in paragraphs (c)(1) through (7) of this section must meet the requirements of this part by meeting the requirements of 40 CFR part 60 subpart IIII, for compression ignition engines or 40 CFR part 60 subpart JJJJ, for spark ignition engines. No further requirements apply for such engines under this part.

(1) A new or reconstructed stationary RICE located at an area source;

The RICE engine located at IFL's Idaho Falls facility meets the definition or a new or reconstructed station RICE located at an area source. As such, the engine is subject to the requirements of 40 CFR part 60 subpart IIII. IFL has analyzed and will comply with these requirements. No further requirements under Subpart ZZZZ apply.

(2) A new or reconstructed 2SLB stationary RICE with a site rating of less than or equal to 500 brake HP located at a major source of HAP emissions;

(3) A new or reconstructed 4SLB stationary RICE with a site rating of less than 250 brake HP located at a major source of HAP emissions;

(4) A new or reconstructed spark ignition 4 stroke rich burn (4SRB) stationary RICE with a site rating of less than or equal to 500 brake HP located at a major source of HAP emissions;

(5) A new or reconstructed stationary RICE with a site rating of less than or equal to 500 brake HP located at a major source of HAP emissions which combusts landfill or digester gas equivalent to 10 percent or more of the gross heat input on an annual basis;

(6) A new or reconstructed emergency or limited use stationary RICE with a site rating of less than or equal to 500 brake HP located at a major source of HAP emissions;

(7) A new or reconstructed compression ignition (CI) stationary RICE with a site rating of less than or equal to 500 brake HP located at a major source of HAP emissions.

[69 FR 33506, June 15, 2004, as amended at 73 FR 3604, Jan. 18, 2008; 75 FR 9674, Mar. 3, 2010; 75 FR 37733, June 30, 2010; 75 FR 51588, Aug. 20, 2010]

Back to Top

e evaluation of each CPMS in accordance with your site-specific monitoring plan.

(c) If you are operating a new or reconstructed stationary RICE which fires landfill gas or digester gas equivalent to 10 percent or more of the gross heat input on an annual basis, you must monitor and record your fuel usage daily with separate fuel meters to measure the volumetric flow rate of each fuel. In addition, you must operate your stationary RICE in a manner which reasonably minimizes HAP emissions.

(d) If you are operating a new or reconstructed emergency 4SLB stationary RICE with a site rating of greater than or equal to 250 and less than or equal to 500 brake HP located at a major source of HAP emissions, you must install a non-resettable hour meter prior to the startup of the engine.

(e) If you own or operate any of the following stationary RICE, you must operate and maintain the stationary RICE and after-treatment control device (if any) according to the manufacturer's emission-related written instructions or develop your own maintenance plan which must provide to the extent practicable for the maintenance and operation of the engine in a manner consistent with good air pollution control practice for minimizing emissions:

(1) An existing stationary RICE with a site rating of less than 100 HP located at a major source of HAP emissions;

(2) An existing emergency or black start stationary RICE with a site rating of less than or equal to 500 HP located at a major source of HAP emissions;

(3) An existing emergency or black start stationary RICE located at an area source of HAP emissions;

(4) An existing non-emergency, non-black start stationary CI RICE with a site rating less than or equal to 300 HP located at an area source of HAP emissions;

(5) An existing non-emergency, non-black start 2SLB stationary RICE located at an area source of HAP emissions;

(6) An existing non-emergency, non-black start landfill or digester gas stationary RICE located at an area source of HAP emissions;

(7) An existing non-emergency, non-black start 4SLB stationary RICE with a site rating less than or equal to 500 HP located at an area source of HAP emissions;

(8) An existing non-emergency, non-black start 4SRB stationary RICE with a site rating less than or equal to 500 HP located at an area source of HAP emissions;

(9) An existing, non-emergency, non-black start 4SLB stationary RICE with a site rating greater than 500 HP located at an area source of HAP emissions that is operated 24 hours or less per calendar year; and

(10) An existing, non-emergency, non-black start 4SRB stationary RICE with a site rating greater than 500 HP located at an area source of HAP emissions that is operated 24 hours or less per calendar year.

(f) If you own or operate an existing emergency stationary RICE with a site rating of less than or equal to 500 brake HP located at a major source of HAP emissions or an existing emergency stationary RICE located at an area source of HAP emissions, you must install a non-resettable hour meter if one is not already installed.

(g) If you own or operate an existing non-emergency, non-black start CI engine greater than or equal to 300 HP that is not equipped with a closed crankcase ventilation system, you must comply with either paragraph (g)(1) or paragraph (g)(2) of this section. Owners and operators must follow the manufacturer's specified maintenance requirements for operating and maintaining the open or closed crankcase ventilation systems and replacing the crankcase filters, or can request the Administrator to approve different maintenance requirements that are as protective as manufacturer requirements. Existing CI engines located at area sources in areas of Alaska not accessible by the FAHS do not have to meet the requirements of paragraph (g) of this section.

(1) Install a closed crankcase ventilation system that prevents crankcase emissions from being emitted to the atmosphere, or

(2) Install an open crankcase filtration emission control system that reduces emissions from the crankcase by filtering the exhaust stream to remove oil mist, particulates, and metals.

(h) If you operate a new, reconstructed, or existing stationary engine, you must minimize the engine's time spent at idle during startup and minimize the engine's startup time to a period needed for appropriate and safe loading of the engine, not to exceed 30 minutes, after which time the emission standards applicable to all times other than startup in Tables 1a, 2a, 2c, and 2d to this subpart apply.

(i) If you own or operate a stationary CI engine that is subject to the work, operation or management practices in items 1 or 2 of Table 2c to this subpart or in items 1 or 4 of Table 2d to this subpart, you have the option of utilizing an oil analysis program in order to extend the specified oil change requirement in Tables 2c and 2d to this subpart. The oil analysis must be performed at the same frequency specified for changing the oil in Table 2c or 2d to this subpart. The analysis program must at a minimum analyze the following three parameters: Total Base Number, viscosity, and percent water content. The condemning limits for these parameters are as follows: Total Base Number is less than 30 percent of the Total Base Number of the oil when new; viscosity of the oil has changed by more than 20 percent from the viscosity of the oil when new; or percent water content (by volume) is greater than 0.5. If all of these condemning limits are not exceeded, the engine owner or operator is not required to change the oil. If any of the limits are exceeded, the engine owner or operator must change the oil within 2 days of receiving the results of the analysis; if the engine is not in operation when the results of the analysis are received, the engine owner or operator must change the oil within 2 days or before commencing operation, whichever is later. The owner or operator must keep records of the parameters that are analyzed as part of the program, the results of the analysis, and the oil changes for the engine. The analysis program must be part of the maintenance plan for the engine.

(j) If you own or operate a stationary SI engine that is subject to the work, operation or management practices in items 6, 7, or 8 of Table 2c to this subpart or in items 5, 6, 7, 9, or 11 of Table 2d to this subpart, you have the option of utilizing an oil analysis program in order to extend the specified oil change requirement in Tables 2c and 2d to this subpart. The oil analysis must be performed at the same frequency specified for changing the oil in Table 2c or 2d to this subpart. The analysis program must at a minimum analyze the following three parameters: Total Acid Number, viscosity, and percent water content. The condemning limits for these parameters are as follows: Total Acid Number increases by more than 3.0 milligrams of potassium hydroxide (KOH) per gram from Total Acid Number of the oil when new; viscosity of the oil has changed by more than 20 percent from the viscosity of the oil when new; or percent water content (by volume) is greater than 0.5. If all of these condemning limits are not exceeded, the engine owner or operator is not required to change the oil. If any of the limits are exceeded, the engine owner or operator must change the oil within 2 days of receiving the results of the analysis; if the engine is not in operation when the results of the analysis are received, the engine owner or operator must change the oil within 2 days or before commencing operation, whichever is later. The owner or operator must keep records of the parameters that are analyzed as part of the program, the results of the analysis, and the oil changes for the engine. The analysis program must be part of the maintenance plan for the engine.

[69 FR 33506, June 15, 2004, as amended at 73 FR 3606, Jan. 18, 2008; 75 FR 9676, Mar. 3, 2010; 75 FR 51589, Aug. 20, 2010; 76 FR 12866, Mar. 9, 2011]

Back to Top

§ 63.6675 What definitions apply to this subpart?

Link to an amendment published at 78 FR 6706, January 30, 2013.

Terms used in this subpart are defined in the Clean Air Act (CAA); in 40 CFR 63.2, the General Provisions of this part; and in this section as follows:

Area source means any stationary source of HAP that is not a major source as defined in part 63.

Associated equipment as used in this subpart and as referred to in section 112(n)(4) of the CAA, means equipment associated with an oil or natural gas exploration or production well, and includes all equipment from the well bore to the point of custody transfer, except glycol dehydration units, storage vessels with potential for flash emissions, combustion turbines, and stationary RICE.

Black start engine means an engine whose only purpose is to start up a combustion turbine.

CAA means the Clean Air Act (42 U.S.C. 7401 *et seq.,* as amended by Public Law 101-549, 104 Stat. 2399).

Commercial emergency stationary RICE means an emergency stationary RICE used in commercial establishments such as office buildings, hotels, stores, telecommunications facilities, restaurants, financial institutions such as banks, doctor's offices, and sports and performing arts facilities.

Compression ignition means relating to a type of stationary internal combustion engine that is not a spark ignition engine.

Custody transfer means the transfer of hydrocarbon liquids or natural gas: After processing and/or treatment in the producing operations, or from storage vessels or automatic transfer facilities or other such equipment, including product loading racks, to pipelines or any other forms of transportation. For the purposes of this subpart, the point at which such liquids or natural gas enters a natural gas processing plant is a point of custody transfer.

Deviation means any instance in which an affected source subject to this subpart, or an owner or operator of such a source:

(1) Fails to meet any requirement or obligation established by this subpart, including but not limited to any emission limitation or operating limitation;

(2) Fails to meet any term or condition that is adopted to implement an applicable requirement in this subpart and that is included in the operating permit for any affected source required to obtain such a permit; or

(3) Fails to meet any emission limitation or operating limitation in this subpart during malfunction, regardless or whether or not such failure is permitted by this subpart.

(4) Fails to satisfy the general duty to minimize emissions established by § 63.6(e)(1)(i).

Diesel engine means any stationary RICE in which a high boiling point liquid fuel injected into the combustion chamber ignites when the air charge has been compressed to a temperature sufficiently high for auto-ignition. This process is also known as compression ignition.

Diesel fuel means any liquid obtained from the distillation of petroleum with a boiling point of approximately 150 to 360 degrees Celsius. One commonly used form is fuel oil number 2. Diesel fuel also includes any non-distillate fuel with comparable physical and chemical properties (*e.g.* biodiesel) that is suitable for use in compression ignition engines.

Digester gas means any gaseous by-product of wastewater treatment typically formed through the anaerobic decomposition of organic waste materials and composed principally of methane and CO_2 .

Dual-fuel engine means any stationary RICE in which a liquid fuel (typically diesel fuel) is used for compression ignition and gaseous fuel (typically natural gas) is used as the primary fuel.

Emergency stationary RICE means any stationary internal combustion engine whose operation is limited to emergency situations and required testing and maintenance. Examples include stationary RICE used to produce power for critical networks or equipment (including power supplied to portions of a facility) when electric power from the local utility (or the normal power source, if the facility runs on its own power production) is interrupted, or stationary RICE used to pump water in the case of fire or flood, *etc.* Stationary RICE used for peak shaving are not considered emergency stationary RICE. Stationary RICE used to supply power to an electric grid or that supply non-emergency power as part of a financial arrangement with another entity are not considered to be emergency engines, except as permitted under § 63.6640(f). All emergency stationary RICE must comply with the requirements specified in § 63.6640(f) in order to be considered emergency stationary RICE. If the engine does not comply with the requirements specified in § 63.6640(f), then it is not considered to be an emergency stationary RICE under this subpart.

Engine startup means the time from initial start until applied load and engine and associated equipment reaches steady state or normal operation. For stationary engine with catalytic controls, engine startup means the time from initial start until applied load and engine and associated equipment, including the catalyst, reaches steady state or normal operation.

Four-stroke engine means any type of engine which completes the power cycle in two crankshaft revolutions, with intake and compression strokes in the first revolution and power and exhaust strokes in the second revolution.

Gaseous fuel means a material used for combustion which is in the gaseous state at standard atmospheric temperature and pressure conditions.

Gasoline means any fuel sold in any State for use in motor vehicles and motor vehicle engines, or nonroad or stationary engines, and commonly or commercially known or sold as gasoline.

Glycol dehydration unit means a device in which a liquid glycol (including, but not limited to, ethylene glycol, diethylene glycol, or triethylene glycol) absorbent directly contacts a natural gas stream and absorbs water in a contact tower or absorption column (absorber). The glycol contacts and absorbs water vapor and other gas stream constituents from the natural gas and becomes “rich” glycol. This glycol is then regenerated in the glycol dehydration unit reboiler. The “lean” glycol is then recycled.

Hazardous air pollutants (HAP) means any air pollutants listed in or pursuant to section 112(b) of the CAA.

Institutional emergency stationary RICE means an emergency stationary RICE used in institutional establishments such as medical centers, nursing homes, research centers, institutions of higher education, correctional facilities, elementary and secondary schools, libraries, religious establishments, police stations, and fire stations.

ISO standard day conditions means 288 degrees Kelvin (15 degrees Celsius), 60 percent relative humidity and 101.3 kilopascals pressure.

Landfill gas means a gaseous by-product of the land application of municipal refuse typically formed through the anaerobic decomposition of waste materials and composed principally of methane and CO_2 .

Lean burn engine means any two-stroke or four-stroke spark ignited engine that does not meet the definition of a rich burn engine.

Limited use stationary RICE means any stationary RICE that operates less than 100 hours per year.

Liquefied petroleum gas means any liquefied hydrocarbon gas obtained as a by-product in petroleum refining of natural gas production.

Liquid fuel means any fuel in liquid form at standard temperature and pressure, including but not limited to diesel, residual/crude oil, kerosene/naphtha (jet fuel), and gasoline.

Major Source, as used in this subpart, shall have the same meaning as in § 63.2, except that:

(1) Emissions from any oil or gas exploration or production well (with its associated equipment (as defined in this section)) and emissions from any pipeline compressor station or pump station shall not be aggregated with emissions from other similar units, to determine whether such emission points or stations are major sources, even when emission points are in a contiguous area or under common control;

(2) For oil and gas production facilities, emissions from processes, operations, or equipment that are not part of the same oil and gas production facility, as defined in § 63.1271 of subpart HHH of this part, shall not be aggregated;

(3) For production field facilities, only HAP emissions from glycol dehydration units, storage vessel with the potential for flash emissions, combustion turbines and reciprocating internal combustion engines shall be aggregated for a major source determination; and

(4) Emissions from processes, operations, and equipment that are not part of the same natural gas transmission and storage facility, as defined in § 63.1271 of subpart HHH of this part, shall not be aggregated.

Malfunction means any sudden, infrequent, and not reasonably preventable failure of air pollution control equipment, process equipment, or a process to operate in a normal or usual manner which causes, or has the potential to cause, the emission limitations in an applicable standard to be exceeded. Failures that are caused in part by poor maintenance or careless operation are not malfunctions.

Natural gas means a naturally occurring mixture of hydrocarbon and non-hydrocarbon gases found in geologic formations beneath the Earth's surface, of which the principal constituent is methane. Natural gas may be field or pipeline quality.

Non-selective catalytic reduction (NSCR) means an add-on catalytic nitrogen oxides (NO_x) control device for rich burn engines that, in a two-step reaction, promotes the conversion of excess oxygen, NO_x , CO, and volatile organic compounds (VOC) into CO_2 , nitrogen, and water.

Oil and gas production facility as used in this subpart means any grouping of equipment where hydrocarbon liquids are processed, upgraded (*i.e.,* remove impurities or other constituents to meet contract specifications), or stored prior to the point of custody transfer; or where natural gas is processed, upgraded, or stored prior to entering the natural gas transmission and storage source category. For purposes of a major source determination, facility (including a building, structure, or installation) means oil and natural gas production and processing equipment that is located within the boundaries of an individual surface site as defined in this section. Equipment that is part of a facility will typically be located within close proximity to other equipment located at the same facility. Pieces of production equipment or groupings of equipment located on different oil and gas leases, mineral fee tracts, lease tracts, subsurface or surface unit areas, surface fee tracts, surface lease tracts, or separate surface sites, whether or not connected by a road, waterway, power line or pipeline, shall not be considered part of the same facility. Examples of facilities in the oil and natural gas production source category include, but are not limited to, well sites, satellite tank batteries, central tank batteries, a compressor station that transports natural gas to a natural gas processing plant, and natural gas processing plants.

Oxidation catalyst means an add-on catalytic control device that controls CO and VOC by oxidation.

Peaking unit or engine means any standby engine intended for use during periods of high demand that are not emergencies.

Percent load means the fractional power of an engine compared to its maximum manufacturer's design capacity at engine site conditions. Percent load may range between 0 percent to above 100 percent.

Potential to emit means the maximum capacity of a stationary source to emit a pollutant under its physical and operational design. Any physical or operational limitation on the capacity of the stationary source to emit a pollutant, including air pollution control equipment and restrictions on hours of operation or on the type or amount of material combusted, stored, or processed, shall be treated as part of its design if the limitation or the effect it would have on emissions is federally enforceable. For oil and natural gas production facilities subject to subpart HH of this part, the potential to emit provisions in § 63.760(a) may be used. For natural gas transmission and storage facilities subject to subpart HHH of this part, the maximum annual facility gas throughput for storage facilities may be determined according to § 63.1270(a)(1) and the maximum annual throughput for transmission facilities may be determined according to § 63.1270(a)(2).

Production field facility means those oil and gas production facilities located prior to the point of custody transfer.

Production well means any hole drilled in the earth from which crude oil, condensate, or field natural gas is extracted.

Propane means a colorless gas derived from petroleum and natural gas, with the molecular structure $C_3 H_8$.

Residential emergency stationary RICE means an emergency stationary RICE used in residential establishments such as homes or apartment buildings.

Responsible official means responsible official as defined in 40 CFR 70.2.

Rich burn engine means any four-stroke spark ignited engine where the manufacturer's recommended operating air/fuel ratio divided by the stoichiometric air/fuel ratio at full load conditions is less than or equal to 1.1. Engines originally manufactured as rich burn engines, but modified prior to December 19, 2002 with passive emission control technology for NO_x (such as pre-combustion chambers) will be considered lean burn engines. Also, existing engines where there are no

manufacturer's recommendations regarding air/fuel ratio will be considered a rich burn engine if the excess oxygen content of the exhaust at full load conditions is less than or equal to 2 percent.

Site-rated HP means the maximum manufacturer's design capacity at engine site conditions.

Spark ignition means relating to either: A gasoline-fueled engine; or any other type of engine with a spark plug (or other sparking device) and with operating characteristics significantly similar to the theoretical Otto combustion cycle. Spark ignition engines usually use a throttle to regulate intake air flow to control power during normal operation. Dual-fuel engines in which a liquid fuel (typically diesel fuel) is used for CI and gaseous fuel (typically natural gas) is used as the primary fuel at an annual average ratio of less than 2 parts diesel fuel to 100 parts total fuel on an energy equivalent basis are spark ignition engines.

Stationary reciprocating internal combustion engine (RICE) means any reciprocating internal combustion engine which uses reciprocating motion to convert heat energy into mechanical work and which is not mobile. Stationary RICE differ from mobile RICE in that a stationary RICE is not a non-road engine as defined at 40 CFR 1068.30, and is not used to propel a motor vehicle or a vehicle used solely for competition.

Stationary RICE test cell/stand means an engine test cell/stand, as defined in subpart PPPPP of this part, that tests stationary RICE.

Stoichiometric means the theoretical air-to-fuel ratio required for complete combustion.

Storage vessel with the potential for flash emissions means any storage vessel that contains a hydrocarbon liquid with a stock tank gas-to-oil ratio equal to or greater than 0.31 cubic meters per liter and an American Petroleum Institute gravity equal to or greater than 40 degrees and an actual annual average hydrocarbon liquid throughput equal to or greater than 79,500 liters per day. Flash emissions occur when dissolved hydrocarbons in the fluid evolve from solution when the fluid pressure is reduced.

Subpart means 40 CFR part 63, subpart ZZZZ.

Surface site means any combination of one or more graded pad sites, gravel pad sites, foundations, platforms, or the immediate physical location upon which equipment is physically affixed.

Two-stroke engine means a type of engine which completes the power cycle in single crankshaft revolution by combining the intake and compression operations into one stroke and the power and exhaust operations into a second stroke. This system requires auxiliary scavenging and inherently runs lean of stoichiometric.

[69 FR 33506, June 15, 2004, as amended at 71 FR 20467, Apr. 20, 2006; 73 FR 3607, Jan. 18, 2008; 75 FR 9679, Mar. 3, 2010; 75 FR 51592, Aug. 20, 2010; 76 FR 12867, Mar. 9, 2011]

IFL has read and understands the definitions presented in this subpart as they apply to IFL facility equipment and operations.

Subpart IIII—Standards of Performance for Stationary Compression Ignition Internal Combustion Engines

Contents

WHAT THIS SUBPART COVERS

§ 60.4200 Am I subject to this subpart?

EMISSION STANDARDS FOR MANUFACTURERS

§ 60.4201 What emission standards must I meet for non-emergency engines if I am a stationary CI internal combustion engine manufacturer?
§ 60.4202 What emission standards must I meet for emergency engines if I am a stationary CI internal combustion engine manufacturer?
§ 60.4203 How long must my engines meet the emission standards if I am a manufacturer of stationary CI internal combustion engines?

EMISSION STANDARDS FOR OWNERS AND OPERATORS

§ 60.4204 What emission standards must I meet for non-emergency engines if I am an owner or operator of a stationary CI internal combustion engine?
§ 60.4205 What emission standards must I meet for emergency engines if I am an owner or operator of a stationary CI internal combustion engine?
§ 60.4206 How long must I meet the emission standards if I am an owner or operator of a stationary CI internal combustion engine?

FUEL REQUIREMENTS FOR OWNERS AND OPERATORS

§ 60.4207 What fuel requirements must I meet if I am an owner or operator of a stationary CI internal combustion engine subject to this subpart?

OTHER REQUIREMENTS FOR OWNERS AND OPERATORS

§ 60.4208 What is the deadline for importing or installing stationary CI ICE produced in previous model years?
§ 60.4209 What are the monitoring requirements if I am an owner or operator of a stationary CI internal combustion engine?

COMPLIANCE REQUIREMENTS

§ 60.4210 What are my compliance requirements if I am a stationary CI internal combustion engine manufacturer?
§ 60.4211 What are my compliance requirements if I am an owner or operator of a stationary CI internal combustion engine?

TESTING REQUIREMENTS FOR OWNERS AND OPERATORS

§ 60.4212 What test methods and other procedures must I use if I am an owner or operator of a stationary CI internal combustion engine with a displacement of less than 30 liters per cylinder?
§ 60.4213 What test methods and other procedures must I use if I am an owner or operator of a stationary CI internal combustion engine with a displacement of greater than or equal to 30 liters per cylinder?

NOTIFICATION, REPORTS, AND RECORDS FOR OWNERS AND OPERATORS

§ 60.4214 What are my notification, reporting, and recordkeeping requirements if

SPECIAL REQUIREMENTS

§ 60.4215 What requirements must I meet for engines used in Guam, American Samoa, or the Commonwealth of the Northern Mariana Islands?
§ 60.4216 What requirements must I meet for engines used in Alaska?
§ 60.4217 What emission standards must I meet if I am an owner or operator of a stationary internal combustion engine using special fuels?

GENERAL PROVISIONS

§ 60.4218 What parts of the General Provisions apply to me?
§ 60.4219 What definitions apply to this subpart?
Table 1 to Subpart IIII of Part 60—Emission Standards for Stationary Pre-2007 Model Year Engines With a Displacement of <10 Liters per Cylinder and 2007-2010 Model Year Engines >2,237 KW (3,000 HP) and With a Displacement of <10 Liters per Cylinder
Table 2 to Subpart IIII of Part 60—Emission Standards for 2008 Model Year and Later Emergency Stationary CI ICE <37 KW (50 HP) With a Displacement of <10 Liters per Cylinder
Table 3 to Subpart IIII of Part 60—Certification Requirements for Stationary Fire Pump Engines
Table 4 to Subpart IIII of Part 60—Emission Standards for Stationary Fire Pump Engines

Table 5 to Subpart IIII of Part 60—Labeling and Recordkeeping Requirements for New Stationary Emergency Engines
Table 6 to Subpart IIII of Part 60—Optional 3-Mode Test Cycle for Stationary Fire Pump Engines
Table 7 to Subpart IIII of Part 60—Requirements for Performance Tests for Stationary CI ICE With a Displacement of ≥30 Liters per Cylinder
Table 8 to Subpart IIII of Part 60—Applicability of General Provisions to Subpart IIII

SOURCE: 71 FR 39172, July 11, 2006, unless otherwise noted.

Back to Top

What This Subpart Covers

Back to Top

§ 60.4200 Am I subject to this subpart?

(a) The provisions of this subpart are applicable to manufacturers, owners, and operators of stationary compression ignition (CI) internal combustion engines (ICE) and other persons as specified in paragraphs (a)(1) through (4) of this section. For the purposes of this subpart, the date that construction commences is the date the engine is ordered by the owner or operator.

(1) Manufacturers of stationary CI ICE with a displacement of less than 30 liters per cylinder where the model year is:

(i) 2007 or later, for engines that are not fire pump engines;

(ii) The model year listed in Table 3 to this subpart or later model year, for fire pump engines.

(2) Owners and operators of stationary CI ICE that commence construction after July 11, 2005, where the stationary CI ICE are:

(i) Manufactured after April 1, 2006, and are not fire pump engines, or

(ii) Manufactured as a certified National Fire Protection Association (NFPA) fire pump engine after July 1, 2006.

(3) Owners and operators of any stationary CI ICE that are modified or reconstructed after July 11, 2005 and any person that modifies or reconstructs any stationary CI ICE after July 11, 2005.

(4) The provisions of § 60.4208 of this subpart are applicable to all owners and operators of stationary CI ICE that commence construction after July 11, 2005.

(b) The provisions of this subpart are not applicable to stationary CI ICE being tested at a stationary CI ICE test cell/stand.

(c) If you are an owner or operator of an area source subject to this subpart, you are exempt from the obligation to obtain a permit under 40 CFR part 70 or 40 CFR part 71, provided you are not required to obtain a permit under 40 CFR 70.3(a) or 40 CFR 71.3(a) for a reason other than your status as an area source under this subpart. Notwithstanding the previous sentence, you must continue to comply with the provisions of this subpart applicable to area sources.

(d) Stationary CI ICE may be eligible for exemption from the requirements of this subpart as described in 40 CFR part 1068, subpart C (or the exemptions described in 40 CFR part 89, subpart J and 40 CFR part 94, subpart J, for engines that would need to be certified to standards in those parts), except that owners and operators, as well as manufacturers, may be eligible to request an exemption for national security.

(e) Owners and operators of facilities with CI ICE that are acting as temporary replacement units and that are located at a stationary source for less than 1 year and that have been properly certified as meeting the standards that would be applicable to such engine under the appropriate nonroad engine provisions, are not required to meet any other provisions under this subpart with regard to such engines.

[71 FR 39172, July 11, 2006, as amended at 76 FR 37967, June 28, 2011]

Idahoan Foods, LLC (IFL) is considered an owner/operator of a stationary CI ICE as defined 60.4219 which is a certified NFPA fire pump engine and was manufactured after July 1, 2006. IFL is therefore subject to this subpart.

Emission Standards for Manufacturers

Back to Top

§ 60.4201 What emission standards must I meet for non-emergency engines if I am a stationary CI internal combustion engine manufacturer?

(a) Stationary CI internal combustion engine manufacturers must certify their 2007 model year and later non-emergency stationary CI ICE with a maximum engine power less than or equal to 2,237 kilowatt (KW) (3,000 horsepower (HP)) and a displacement of less than 10 liters per cylinder to the certification emission standards for new nonroad CI engines in 40 CFR 89.112, 40 CFR 89.113, 40 CFR 1039.101, 40 CFR 1039.102, 40 CFR 1039.104, 40 CFR 1039.105, 40 CFR 1039.107, and 40 CFR 1039.115, as applicable, for all pollutants, for the same model year and maximum engine power.

(b) Stationary CI internal combustion engine manufacturers must certify their 2007 through 2010 model year non-emergency stationary CI ICE with a maximum engine power greater than 2,237 KW (3,000 HP) and a displacement of less than 10 liters per cylinder to the emission standards in table 1 to this subpart, for all pollutants, for the same maximum engine power.

(c) Stationary CI internal combustion engine manufacturers must certify their 2011 model year and later non-emergency stationary CI ICE with a maximum engine power greater than 2,237 KW (3,000 HP) and a displacement of less than 10 liters per cylinder to the certification emission standards for new nonroad CI engines in 40 CFR 1039.101, 40 CFR 1039.102, 40 CFR 1039.104, 40 CFR 1039.105, 40 CFR 1039.107, and 40 CFR 1039.115, as applicable, for all pollutants, for the same maximum engine power.

(d) Stationary CI internal combustion engine manufacturers must certify the following non-emergency stationary CI ICE to the certification emission standards for new marine CI engines in 40 CFR 94.8, as applicable, for all pollutants, for the same displacement and maximum engine power:

(1) Their 2007 model year through 2012 non-emergency stationary CI ICE with a displacement of greater than or equal to 10 liters per cylinder and less than 30 liters per cylinder;

(2) Their 2013 model year non-emergency stationary CI ICE with a maximum engine power greater than or equal to 3,700 KW (4,958 HP) and a displacement of greater than or equal to 10 liters per cylinder and less than 15 liters per cylinder; and

(3) Their 2013 model year non-emergency stationary CI ICE with a displacement of greater than or equal to 15 liters per cylinder and less than 30 liters per cylinder.

(e) Stationary CI internal combustion engine manufacturers must certify the following non-emergency stationary CI ICE to the certification emission standards and other requirements for new marine CI engines in 40 CFR 1042.101, 40 CFR 1042.107, 40 CFR 1042.110, 40 CFR 1042.115, 40 CFR 1042.120, and 40 CFR 1042.145, as applicable, for all pollutants, for the same displacement and maximum engine power:

(1) Their 2013 model year non-emergency stationary CI ICE with a maximum engine power less than 3,700 KW (4,958 HP) and a displacement of greater than or equal to 10 liters per cylinder and less than 15 liters per cylinder; and

(2) Their 2014 model year and later non-emergency stationary CI ICE with a displacement of greater than or equal to 10 liters per cylinder and less than 30 liters per cylinder.

(f) Notwithstanding the requirements in paragraphs (a) through (c) of this section, stationary non-emergency CI ICE identified in paragraphs (a) and (c) may be certified to the provisions of 40 CFR part 94 or, if Table 1 to 40 CFR 1042.1 identifies 40 CFR part 1042 as being applicable, 40 CFR part 1042, if the engines will be used solely in either or both of the following locations:

(1) Areas of Alaska not accessible by the Federal Aid Highway System (FAHS); and

(2) Marine offshore installations.

(g) Notwithstanding the requirements in paragraphs (a) through (f) of this section, stationary CI internal combustion engine manufacturers are not required to certify reconstructed engines; however manufacturers may elect to do so. The reconstructed

engine must be certified to the emission standards specified in paragraphs (a) through (e) of this section that are applicable to the model year, maximum engine power, and displacement of the reconstructed stationary CI ICE.

[71 FR 39172, July 11, 2006, as amended at 76 FR 37967, June 28, 2011]

IFL is not an engine manufacturer and is therefore not subject to this section.

Back to Top

§ 60.4202 What emission standards must I meet for emergency engines if I am a stationary CI internal combustion engine manufacturer?

(a) Stationary CI internal combustion engine manufacturers must certify their 2007 model year and later emergency stationary CI ICE with a maximum engine power less than or equal to 2,237 KW (3,000 HP) and a displacement of less than 10 liters per cylinder that are not fire pump engines to the emission standards specified in paragraphs (a)(1) through (2) of this section.

(1) For engines with a maximum engine power less than 37 KW (50 HP):

(i) The certification emission standards for new nonroad CI engines for the same model year and maximum engine power in 40 CFR 89.112 and 40 CFR 89.113 for all pollutants for model year 2007 engines, and

(ii) The certification emission standards for new nonroad CI engines in 40 CFR 1039.104, 40 CFR 1039.105, 40 CFR 1039.107, 40 CFR 1039.115, and table 2 to this subpart, for 2008 model year and later engines.

(2) For engines with a maximum engine power greater than or equal to 37 KW (50 HP), the certification emission standards for new nonroad CI engines for the same model year and maximum engine power in 40 CFR 89.112 and 40 CFR 89.113 for all pollutants beginning in model year 2007.

(b) Stationary CI internal combustion engine manufacturers must certify their 2007 model year and later emergency stationary CI ICE with a maximum engine power greater than 2,237 KW (3,000 HP) and a displacement of less than 10 liters per cylinder that are not fire pump engines to the emission standards specified in paragraphs (b)(1) through (2) of this section.

(1) For 2007 through 2010 model years, the emission standards in table 1 to this subpart, for all pollutants, for the same maximum engine power.

(2) For 2011 model year and later, the certification emission standards for new nonroad CI engines for engines of the same model year and maximum engine power in 40 CFR 89.112 and 40 CFR 89.113 for all pollutants.

(c) [Reserved]

(d) Beginning with the model years in table 3 to this subpart, stationary CI internal combustion engine manufacturers must certify their fire pump stationary CI ICE to the emission standards in table 4 to this subpart, for all pollutants, for the same model year and NFPA nameplate power.

(e) Stationary CI internal combustion engine manufacturers must certify the following emergency stationary CI ICE that are not fire pump engines to the certification emission standards for new marine CI engines in 40 CFR 94.8, as applicable, for all pollutants, for the same displacement and maximum engine power:

(1) Their 2007 model year through 2012 emergency stationary CI ICE with a displacement of greater than or equal to 10 liters per cylinder and less than 30 liters per cylinder;

(2) Their 2013 model year and later emergency stationary CI ICE with a maximum engine power greater than or equal to 3,700 KW (4,958 HP) and a displacement of greater than or equal to 10 liters per cylinder and less than 15 liters per cylinder;

(3) Their 2013 model year emergency stationary CI ICE with a displacement of greater than or equal to 15 liters per cylinder and less than 30 liters per cylinder; and

(4) Their 2014 model year and later emergency stationary CI ICE with a maximum engine power greater than or equal to 2,000 KW (2,682 HP) and a displacement of greater than or equal to 15 liters per cylinder and less than 30 liters per cylinder.

(f) Stationary CI internal combustion engine manufacturers must certify the following emergency stationary CI ICE to the certification emission standards and other requirements applicable to Tier 3 new marine CI engines in 40 CFR 1042.101, 40 CFR 1042.107, 40 CFR 1042.115, 40 CFR 1042.120, and 40 CFR 1042.145, for all pollutants, for the same displacement and maximum engine power:

(1) Their 2013 model year and later emergency stationary CI ICE with a maximum engine power less than 3,700 KW (4,958 HP) and a displacement of greater than or equal to 10 liters per cylinder and less than 15 liters per cylinder; and

(2) Their 2014 model year and later emergency stationary CI ICE with a maximum engine power less than 2,000 KW (2,682 HP) and a displacement of greater than or equal to 15 liters per cylinder and less than 30 liters per cylinder.

(g) Notwithstanding the requirements in paragraphs (a) through (d) of this section, stationary emergency CI internal combustion engines identified in paragraphs (a) and (c) may be certified to the provisions of 40 CFR part 94 or, if Table 2 to 40 CFR 1042.101 identifies Tier 3 standards as being applicable, the requirements applicable to Tier 3 engines in 40 CFR part 1042, if the engines will be used solely in either or both of the following locations:

(1) Areas of Alaska not accessible by the FAHS; and

(2) Marine offshore installations.

(h) Notwithstanding the requirements in paragraphs (a) through (f) of this section, stationary CI internal combustion engine manufacturers are not required to certify reconstructed engines; however manufacturers may elect to do so. The reconstructed engine must be certified to the emission standards specified in paragraphs (a) through (f) of this section that are applicable to the model year, maximum engine power and displacement of the reconstructed emergency stationary CI ICE.

[71 FR 39172, July 11, 2006, as amended at 76 FR 37968, June 28, 2011]

IFL is not an engine manufacturer and is therefore not subject to this section. Back to Top

§ 60.4203 How long must my engines meet the emission standards if I am a manufacturer of stationary CI internal combustion engines?

Engines manufactured by stationary CI internal combustion engine manufacturers must meet the emission standards as required in §§ 60.4201 and 60.4202 during the certified emissions life of the engines.

[76 FR 37968, June 28, 2011]

IFL is not an engine manufacturer and is therefore not subject to this section.

Back to Top

Emission Standards for Owners and Operators

Back to Top

§ 60.4204 What emission standards must I meet for non-emergency engines if I am an owner or operator of a stationary CI internal combustion engine?

(a) Owners and operators of pre-2007 model year non-emergency stationary CI ICE with a displacement of less than 10 liters per cylinder must comply with the emission standards in table 1 to this subpart. Owners and operators of pre-2007 model year non-emergency stationary CI ICE with a displacement of greater than or equal to 10 liters per cylinder and less than 30 liters per cylinder must comply with the emission standards in 40 CFR 94.8(a)(1).

(b) Owners and operators of 2007 model year and later non-emergency stationary CI ICE with a displacement of less than 30 liters per cylinder must comply with the emission standards for new CI engines in § 60.4201 for their 2007 model year and later stationary CI ICE, as applicable.

(c) Owners and operators of non-emergency stationary CI engines with a displacement of greater than or equal to 30 liters per cylinder must meet the following requirements:

(1) For engines installed prior to January 1, 2012, limit the emissions of NO_x in the stationary CI internal combustion engine exhaust to the following:

(i) 17.0 grams per kilowatt-hour (g/KW-hr) (12.7 grams per horsepower-hr (g/HP-hr)) when maximum engine speed is less than 130 revolutions per minute (rpm);

(ii) $45 \cdot n^{-0.2}$ g/KW-hr ($34 \cdot n^{-0.2}$ g/HP-hr) when maximum engine speed is 130 or more but less than 2,000 rpm, where n is maximum engine speed; and

(iii) 9.8 g/KW-hr (7.3 g/HP-hr) when maximum engine speed is 2,000 rpm or more.

(2) For engines installed on or after January 1, 2012 and before January 1, 2016, limit the emissions of NO_x in the stationary CI internal combustion engine exhaust to the following:

(i) 14.4 g/KW-hr (10.7 g/HP-hr) when maximum engine speed is less than 130 rpm;

(ii) $44 \cdot n^{-0.23}$ g/KW-hr ($33 \cdot n^{-0.23}$ g/HP-hr) when maximum engine speed is greater than or equal to 130 but less than 2,000 rpm and where n is maximum engine speed; and

(iii) 7.7 g/KW-hr (5.7 g/HP-hr) when maximum engine speed is greater than or equal to 2,000 rpm.

(3) For engines installed on or after January 1, 2016, limit the emissions of NO_x in the stationary CI internal combustion engine exhaust to the following:

(i) 3.4 g/KW-hr (2.5 g/HP-hr) when maximum engine speed is less than 130 rpm;

(ii) $9.0 \cdot n^{-0.20}$ g/KW-hr ($6.7 \cdot n^{-0.20}$ g/HP-hr) where n (maximum engine speed) is 130 or more but less than 2,000 rpm; and

(iii) 2.0 g/KW-hr (1.5 g/HP-hr) where maximum engine speed is greater than or equal to 2,000 rpm.

(4) Reduce particulate matter (PM) emissions by 60 percent or more, or limit the emissions of PM in the stationary CI internal combustion engine exhaust to 0.15 g/KW-hr (0.11 g/HP-hr).

(d) Owners and operators of non-emergency stationary CI ICE with a displacement of less than 30 liters per cylinder who conduct performance tests in-use must meet the not-to-exceed (NTE) standards as indicated in § 60.4212.

(e) Owners and operators of any modified or reconstructed non-emergency stationary CI ICE subject to this subpart must meet the emission standards applicable to the model year, maximum engine power, and displacement of the modified or reconstructed non-emergency stationary CI ICE that are specified in paragraphs (a) through (d) of this section.

[71 FR 39172, July 11, 2006, as amended at 76 FR 37968, June 28, 2011]

IFL's fire pump engine meets the definition of an emergency stationary CI ICE under 60.and is therefore not subject to any of the requirements of 60.4219.

Back to Top

§ 60.4205 What emission standards must I meet for emergency engines if I am an owner or operator of a stationary CI internal combustion engine?

(a) Owners and operators of pre-2007 model year emergency stationary CI ICE with a displacement of less than 10 liters per cylinder that are not fire pump engines must comply with the emission standards in Table 1 to this subpart. Owners and operators of pre-2007 model year emergency stationary CI ICE with a displacement of greater than or equal to 10 liters per cylinder and less than 30 liters per cylinder that are not fire pump engines must comply with the emission standards in 40 CFR 94.8(a)(1).

(b) Owners and operators of 2007 model year and later emergency stationary CI ICE with a displacement of less than 30 liters per cylinder that are not fire pump engines must comply with the emission standards for new nonroad CI engines in § 60.4202, for all pollutants, for the same model year and maximum engine power for their 2007 model year and later emergency stationary CI ICE.

(c) Owners and operators of fire pump engines with a displacement of less than 30 liters per cylinder must comply with the emission standards in table 4 to this subpart, for all pollutants.

(d) Owners and operators of emergency stationary CI engines with a displacement of greater than or equal to 30 liters per cylinder must meet the requirements in this section.

(1) For engines installed prior to January 1, 2012, limit the emissions of NO_x in the stationary CI internal combustion engine exhaust to the following:

(i) 17.0 g/KW-hr (12.7 g/HP-hr) when maximum engine speed is less than 130 rpm;

(ii) $45 \cdot n^{-0.2}$ g/KW-hr ($34 \cdot n^{-0.2}$ g/HP-hr) when maximum engine speed is 130 or more but less than 2,000 rpm, where n is maximum engine speed; and

(iii) 9.8 g/kW-hr (7.3 g/HP-hr) when maximum engine speed is 2,000 rpm or more.

(2) For engines installed on or after January 1, 2012, limit the emissions of NO_x in the stationary CI internal combustion engine exhaust to the following:

(i) 14.4 g/KW-hr (10.7 g/HP-hr) when maximum engine speed is less than 130 rpm;

(ii) $44 \cdot n^{-0.23}$ g/KW-hr ($33 \cdot n^{-0.23}$ g/HP-hr) when maximum engine speed is greater than or equal to 130 but less than 2,000 rpm and where n is maximum engine speed; and

(iii) 7.7 g/KW-hr (5.7 g/HP-hr) when maximum engine speed is greater than or equal to 2,000 rpm.

(3) Limit the emissions of PM in the stationary CI internal combustion engine exhaust to 0.40 g/KW-hr (0.30 g/HP-hr).

(e) Owners and operators of emergency stationary CI ICE with a displacement of less than 30 liters per cylinder who conduct performance tests in-use must meet the NTE standards as indicated in § 60.4212.

(f) Owners and operators of any modified or reconstructed emergency stationary CI ICE subject to this subpart must meet the emission standards applicable to the model year, maximum engine power, and displacement of the modified or reconstructed CI ICE that are specified in paragraphs (a) through (e) of this section.

[71 FR 39172, July 11, 2006, as amended at 76 FR 37969, June 28, 2011]

IFL operates an engine that meets the definition of an emergency stationary CI ICE which is a fire pump, with displacement of less than 30 liters per cylinder. As such, it is required to meet the emission standards in Table 4 of this subpart. IFL has complied with this requirement by purchasing an engine certified to meet those standards.

Back to Top

§ 60.4206 How long must I meet the emission standards if I am an owner or operator of a stationary CI internal combustion engine?

Owners and operators of stationary CI ICE must operate and maintain stationary CI ICE that achieve the emission standards as required in §§ 60.4204 and 60.4205 over the entire life of the engine.

[76 FR 37969, June 28, 2011]

IFL is required to meet the emission standards as defined in 60.4205 and will meet those emission standards for the entire life of the engine.

Back to Top

Fuel Requirements for Owners and Operators

Back to Top

§ 60.4207 What fuel requirements must I meet if I am an owner or operator of a stationary CI internal combustion engine subject to this subpart?

Link to an amendment published at 78 FR 6695, Jan. 30, 2013.

(a) Beginning October 1, 2007, owners and operators of stationary CI ICE subject to this subpart that use diesel fuel must use diesel fuel that meets the requirements of 40 CFR 80.510(a).

(b) Beginning October 1, 2010, owners and operators of stationary CI ICE subject to this subpart with a displacement of less than 30 liters per cylinder that use diesel fuel must purchase only diesel fuel that meets the requirements of 40 CFR 80.510(b) for nonroad diesel fuel.

(c) [Reserved]

(d) Beginning June 1, 2012, owners and operators of stationary CI ICE subject to this subpart with a displacement of greater than or equal to 30 liters per cylinder are no longer subject to the requirements of paragraph (a) of this section, and must use fuel that meets a maximum per-gallon sulfur content of 1,000 parts per million (ppm).

(e) Stationary CI ICE that have a national security exemption under § 60.4200(d) are also exempt from the fuel requirements in this section.

[71 FR 39172, July 11, 2006, as amended at 76 FR 37969, June 28, 2011]

IFL is subject to and will comply with the diesel fuel requirements highlighted above. IFL will comply with the requirements by purchasing and using only fuel that meets the standards of 40 CFR 80.510(b). Title 40 CFR 80.510(b) requires fuel to contain no more than 15 ppm sulfur and has a maximum cetane index of less than 40 or has a maximum aromatic content of 35 volume percent.

Back to Top

Other Requirements for Owners and Operators

Back to Top

§ 60.4208 What is the deadline for importing or installing stationary CI ICE produced in previous model years?

(a) After December 31, 2008, owners and operators may not install stationary CI ICE (excluding fire pump engines) that do not meet the applicable requirements for 2007 model year engines.

(b) After December 31, 2009, owners and operators may not install stationary CI ICE with a maximum engine power of less than 19 KW (25 HP) (excluding fire pump engines) that do not meet the applicable requirements for 2008 model year engines.

(c) After December 31, 2014, owners and operators may not install non-emergency stationary CI ICE with a maximum engine power of greater than or equal to 19 KW (25 HP) and less than 56 KW (75 HP) that do not meet the applicable requirements for 2013 model year non-emergency engines.

(d) After December 31, 2013, owners and operators may not install non-emergency stationary CI ICE with a maximum engine power of greater than or equal to 56 KW (75 HP) and less than 130 KW (175 HP) that do not meet the applicable requirements for 2012 model year non-emergency engines.

(e) After December 31, 2012, owners and operators may not install non-emergency stationary CI ICE with a maximum engine power of greater than or equal to 130 KW (175 HP), including those above 560 KW (750 HP), that do not meet the applicable requirements for 2011 model year non-emergency engines.

(f) After December 31, 2016, owners and operators may not install non-emergency stationary CI ICE with a maximum engine power of greater than or equal to 560 KW (750 HP) that do not meet the applicable requirements for 2015 model year non-emergency engines.

(g) After December 31, 2018, owners and operators may not install non-emergency stationary CI ICE with a maximum engine power greater than or equal to 600 KW (804 HP) and less than 2,000 KW (2,680 HP) and a displacement of greater than or equal to 10 liters per cylinder and less than 30 liters per cylinder that do not meet the applicable requirements for 2017 model year non-emergency engines.

(h) In addition to the requirements specified in §§ 60.4201, 60.4202, 60.4204, and 60.4205, it is prohibited to import stationary CI ICE with a displacement of less than 30 liters per cylinder that do not meet the applicable requirements specified in paragraphs (a) through (g) of this section after the dates specified in paragraphs (a) through (g) of this section.

(i) The requirements of this section do not apply to owners or operators of stationary CI ICE that have been modified, reconstructed, and do not apply to engines that were removed from one existing location and reinstalled at a new location.

The fire pump engine at IFL is not directly subject to the requirements of 40.4208, but IFL will not violate any of the requirements of this section.

[71 FR 39172, July 11, 2006, as amended at 76 FR 37969, June 28, 2011]

Back to Top

§ 60.4209 What are the monitoring requirements if I am an owner or operator of a stationary CI internal combustion engine?

If you are an owner or operator, you must meet the monitoring requirements of this section. In addition, you must also meet the monitoring requirements specified in § 60.4211.

(a) If you are an owner or operator of an emergency stationary CI internal combustion engine that does not meet the standards applicable to non-emergency engines, you must install a non-resettable hour meter prior to startup of the engine.

(b) If you are an owner or operator of a stationary CI internal combustion engine equipped with a diesel particulate filter to comply with the emission standards in § 60.4204, the diesel particulate filter must be installed with a backpressure monitor that notifies the owner or operator when the high backpressure limit of the engine is approached.

[71 FR 39172, July 11, 2006, as amended at 76 FR 37969, June 28, 2011]

IFL is subject to the requirement to install a non-resettable hour meter and has complied with this requirement by having a non-resettable hour meter installed on the engine.

Back to Top

Compliance Requirements

Back to Top

§ 60.4210 What are my compliance requirements if I am a stationary CI internal combustion engine manufacturer?

(a) Stationary CI internal combustion engine manufacturers must certify their stationary CI ICE with a displacement of less than 10 liters per cylinder to the emission standards specified in § 60.4201(a) through (c) and § 60.4202(a), (b) and (d) using the certification procedures required in 40 CFR part 89, subpart B, or 40 CFR part 1039, subpart C, as applicable, and must test their engines as specified in those parts. For the purposes of this subpart, engines certified to the standards in table 1 to this subpart shall be subject to the same requirements as engines certified to the standards in 40 CFR part 89. For the purposes of this subpart, engines certified to the standards in table 4 to this subpart shall be subject to the same requirements as engines certified to the standards in 40 CFR part 89, except that engines with NFPA nameplate power of less than 37 KW (50 HP) certified to model year 2011 or later standards shall be subject to the same requirements as engines certified to the standards in 40 CFR part 1039.

(b) Stationary CI internal combustion engine manufacturers must certify their stationary CI ICE with a displacement of greater than or equal to 10 liters per cylinder and less than 30 liters per cylinder to the emission standards specified in § 60.4201(d) and (e) and § 60.4202(e) and (f) using the certification procedures required in 40 CFR part 94, subpart C, or 40 CFR part 1042, subpart C, as applicable, and must test their engines as specified in 40 CFR part 94 or 1042, as applicable.

(c) Stationary CI internal combustion engine manufacturers must meet the requirements of 40 CFR 1039.120, 1039.125, 1039.130, and 1039.135, and 40 CFR part 1068 for engines that are certified to the emission standards in 40 CFR part 1039. Stationary CI internal combustion engine manufacturers must meet the corresponding provisions of 40 CFR part 89, 40 CFR part 94 or 40 CFR part 1042 for engines that would be covered by that part if they were nonroad (including marine) engines. Labels on such engines must refer to stationary engines, rather than or in addition to nonroad or marine engines, as appropriate. Stationary CI internal combustion engine manufacturers must label their engines according to paragraphs (c)(1) through (3) of this section.

(1) Stationary CI internal combustion engines manufactured from January 1, 2006 to March 31, 2006 (January 1, 2006 to June 30, 2006 for fire pump engines), other than those that are part of certified engine families under the nonroad CI engine regulations, must be labeled according to 40 CFR 1039.20.

(2) Stationary CI internal combustion engines manufactured from April 1, 2006 to December 31, 2006 (or, for fire pump engines, July 1, 2006 to December 31 of the year preceding the year listed in table 3 to this subpart) must be labeled according to paragraphs (c)(2)(i) through (iii) of this section:

(i) Stationary CI internal combustion engines that are part of certified engine families under the nonroad regulations must meet the labeling requirements for nonroad CI engines, but do not have to meet the labeling requirements in 40 CFR 1039.20.

(ii) Stationary CI internal combustion engines that meet Tier 1 requirements (or requirements for fire pumps) under this subpart, but do not meet the requirements applicable to nonroad CI engines must be labeled according to 40 CFR 1039.20. The engine manufacturer may add language to the label clarifying that the engine meets Tier 1 requirements (or requirements for fire pumps) of this subpart.

(iii) Stationary CI internal combustion engines manufactured after April 1, 2006 that do not meet Tier 1 requirements of this subpart, or fire pumps engines manufactured after July 1, 2006 that do not meet the requirements for fire pumps under this subpart, may not be used in the U.S. If any such engines are manufactured in the U.S. after April 1, 2006 (July 1, 2006 for fire pump engines), they must be exported or must be brought into compliance with the appropriate standards prior to initial operation. The export provisions of 40 CFR 1068.230 would apply to engines for export and the manufacturers must label such engines according to 40 CFR 1068.230.

(3) Stationary CI internal combustion engines manufactured after January 1, 2007 (for fire pump engines, after January 1 of the year listed in table 3 to this subpart, as applicable) must be labeled according to paragraphs (c)(3)(i) through (iii) of this section.

(i) Stationary CI internal combustion engines that meet the requirements of this subpart and the corresponding requirements for nonroad (including marine) engines of the same model year and HP must be labeled according to the provisions in 40 CFR parts 89, 94, 1039 or 1042, as appropriate.

(ii) Stationary CI internal combustion engines that meet the requirements of this subpart, but are not certified to the standards applicable to nonroad (including marine) engines of the same model year and HP must be labeled according to the provisions in 40 CFR parts 89, 94, 1039 or 1042, as appropriate, but the words “stationary” must be included instead of “nonroad” or “marine” on the label. In addition, such engines must be labeled according to 40 CFR 1039.20.

(iii) Stationary CI internal combustion engines that do not meet the requirements of this subpart must be labeled according to 40 CFR 1068.230 and must be exported under the provisions of 40 CFR 1068.230.

(d) An engine manufacturer certifying an engine family or families to standards under this subpart that are identical to standards applicable under 40 CFR parts 89, 94, 1039 or 1042 for that model year may certify any such family that contains both nonroad (including marine) and stationary engines as a single engine family and/or may include any such family containing stationary engines in the averaging, banking and trading provisions applicable for such engines under those parts.

(e) Manufacturers of engine families discussed in paragraph (d) of this section may meet the labeling requirements referred to in paragraph (c) of this section for stationary CI ICE by either adding a separate label containing the information required in paragraph (c) of this section or by adding the words “and stationary” after the word “nonroad” or “marine,” as appropriate, to the label.

(f) Starting with the model years shown in table 5 to this subpart, stationary CI internal combustion engine manufacturers must add a permanent label stating that the engine is for stationary emergency use only to each new emergency stationary CI internal combustion engine greater than or equal to 19 KW (25 HP) that meets all the emission standards for emergency engines in § 60.4202 but does not meet all the emission standards for non-emergency engines in § 60.4201. The label must be added according to the labeling requirements specified in 40 CFR 1039.135(b). Engine manufacturers must specify in the owner's manual that operation of emergency engines is limited to emergency operations and required maintenance and testing.

(g) Manufacturers of fire pump engines may use the test cycle in table 6 to this subpart for testing fire pump engines and may test at the NFPA certified nameplate HP, provided that the engine is labeled as “Fire Pump Applications Only”.

(h) Engine manufacturers, including importers, may introduce into commerce uncertified engines or engines certified to earlier standards that were manufactured before the new or changed standards took effect until inventories are depleted, as long as such engines are part of normal inventory. For example, if the engine manufacturers' normal industry practice is to keep on hand a one-month supply of engines based on its projected sales, and a new tier of standards starts to apply for the 2009 model year, the engine manufacturer may manufacture engines based on the normal inventory requirements late in the 2008 model year, and sell those engines for installation. The engine manufacturer may not circumvent the provisions of §§ 60.4201 or 60.4202 by stockpiling engines that are built before new or changed standards take effect. Stockpiling of such engines beyond normal industry practice is a violation of this subpart.

(i) The replacement engine provisions of 40 CFR 89.1003(b)(7), 40 CFR 94.1103(b)(3), 40 CFR 94.1103(b)(4) and 40 CFR 1068.240 are applicable to stationary CI engines replacing existing equipment that is less than 15 years old.

IFL is not an engine manufacturer and is therefore not subject to this section.

[71 FR 39172, July 11, 2006, as amended at 76 FR 37969, June 28, 2011]

Back to Top

§ 60.4211 What are my compliance requirements if I am an owner or operator of a stationary CI internal combustion engine?

Link to an amendment published at 78 FR 6695, Jan. 30, 2013.

(a) If you are an owner or operator and must comply with the emission standards specified in this subpart, you must do all of the following, except as permitted under paragraph (g) of this section:

(1) Operate and maintain the stationary CI internal combustion engine and control device according to the manufacturer's emission-related written instructions;

(2) Change only those emission-related settings that are permitted by the manufacturer; and

(3) Meet the requirements of 40 CFR parts 89, 94 and/or 1068, as they apply to you.

IFL must comply with the emission standards of 40 CFR 60.4205(b) and will follow all requirements and instructions for the fire pump engine as required by the manufacturer.

(b) If you are an owner or operator of a pre-2007 model year stationary CI internal combustion engine and must comply with the emission standards specified in §§ 60.4204(a) or 60.4205(a), or if you are an owner or operator of a CI fire pump engine that is manufactured prior to the model years in table 3 to this subpart and must comply with the emission standards specified in § 60.4205(c), you must demonstrate compliance according to one of the methods specified in paragraphs (b)(1) through (5) of this section.

(1) Purchasing an engine certified according to 40 CFR part 89 or 40 CFR part 94, as applicable, for the same model year and maximum engine power. The engine must be installed and configured according to the manufacturer's specifications.

(2) Keeping records of performance test results for each pollutant for a test conducted on a similar engine. The test must have been conducted using the same methods specified in this subpart and these methods must have been followed correctly.

(3) Keeping records of engine manufacturer data indicating compliance with the standards.

(4) Keeping records of control device vendor data indicating compliance with the standards.

(5) Conducting an initial performance test to demonstrate compliance with the emission standards according to the requirements specified in § 60.4212, as applicable.

(c) If you are an owner or operator of a 2007 model year and later stationary CI internal combustion engine and must comply with the emission standards specified in § 60.4204(b) or § 60.4205(b), or if you are an owner or operator of a CI fire pump engine that is manufactured during or after the model year that applies to your fire pump engine power rating in table 3 to this subpart and must comply with the emission standards specified in § 60.4205(c), you must comply by purchasing an engine certified to the emission standards in § 60.4204(b), or § 60.4205(b) or (c), as applicable, for the same model year and maximum (or in the case of fire pumps, NFPA nameplate) engine power. The engine must be installed and configured according to the manufacturer's emission-related specifications, except as permitted in paragraph (g) of this section.

IFL has purchased a fire pump engine certified to meet the emission standards provided in 60.4205(b). IFL will install, configure and operate the fire pump engine according to the manufacturer's emission-related specifications.

(d) If you are an owner or operator and must comply with the emission standards specified in § 60.4204(c) or § 60.4205(d), you must demonstrate compliance according to the requirements specified in paragraphs (d)(1) through (3) of this section.

(1) Conducting an initial performance test to demonstrate initial compliance with the emission standards as specified in § 60.4213.

(2) Establishing operating parameters to be monitored continuously to ensure the stationary internal combustion engine continues to meet the emission standards. The owner or operator must petition the Administrator for approval of operating parameters to be monitored continuously. The petition must include the information described in paragraphs (d)(2)(i) through (v) of this section.

(i) Identification of the specific parameters you propose to monitor continuously;

(ii) A discussion of the relationship between these parameters and NO_x and PM emissions, identifying how the emissions of these pollutants change with changes in these parameters, and how limitations on these parameters will serve to limit NO_x and PM emissions;

(iii) A discussion of how you will establish the upper and/or lower values for these parameters which will establish the limits on these parameters in the operating limitations;

(iv) A discussion identifying the methods and the instruments you will use to monitor these parameters, as well as the relative accuracy and precision of these methods and instruments; and

(v) A discussion identifying the frequency and methods for recalibrating the instruments you will use for monitoring these parameters.

(3) For non-emergency engines with a displacement of greater than or equal to 30 liters per cylinder, conducting annual performance tests to demonstrate continuous compliance with the emission standards as specified in § 60.4213.

(e) If you are an owner or operator of a modified or reconstructed stationary CI internal combustion engine and must comply with the emission standards specified in § 60.4204(e) or § 60.4205(f), you must demonstrate compliance according to one of the methods specified in paragraphs (e)(1) or (2) of this section.

(1) Purchasing, or otherwise owning or operating, an engine certified to the emission standards in § 60.4204(e) or § 60.4205(f), as applicable.

(2) Conducting a performance test to demonstrate initial compliance with the emission standards according to the requirements specified in § 60.4212 or § 60.4213, as appropriate. The test must be conducted within 60 days after the engine commences operation after the modification or reconstruction.

(f) Emergency stationary ICE may be operated for the purpose of maintenance checks and readiness testing, provided that the tests are recommended by Federal, State or local government, the manufacturer, the vendor, or the insurance company associated with the engine. Maintenance checks and readiness testing of such units is limited to 100 hours per year. There is no time limit on the use of emergency stationary ICE in emergency situations. The owner or operator may petition the Administrator for approval of additional hours to be used for maintenance checks and readiness testing, but a petition is not required if the owner or operator maintains records indicating that Federal, State, or local standards require maintenance and testing of emergency ICE beyond 100 hours per year. Emergency stationary ICE may operate up to 50 hours per year in non-emergency situations, but those 50 hours are counted towards the 100 hours per year provided for maintenance and testing. The 50 hours per year for non-emergency situations cannot be used for peak shaving or to generate income for a facility to supply power to an electric grid or otherwise supply non-emergency power as part of a financial arrangement with another entity. For owners and operators of emergency engines, any operation other than emergency operation, maintenance and testing, and operation in non-emergency situations for 50 hours per year, as permitted in this section, is prohibited.

IFL's fire pump engine is considered an emergency engine and is subject to the operational limitations as described in the paragraph above. IFL will not exceed the limitations as listed and will track the hours of operation of the fire pump in order to ensure compliance with these requirements.

(g) If you do not install, configure, operate, and maintain your engine and control device according to the manufacturer's emission-related written instructions, or you change emission-related settings in a way that is not permitted by the manufacturer, you must demonstrate compliance as follows:

(1) If you are an owner or operator of a stationary CI internal combustion engine with maximum engine power less than 100 HP, you must keep a maintenance plan and records of conducted maintenance to demonstrate compliance and must, to the extent practicable, maintain and operate the engine in a manner consistent with good air pollution control practice for minimizing emissions. In addition, if you do not install and configure the engine and control device according to the manufacturer's emission-related written instructions, or you change the emission-related settings in a way that is not permitted by the manufacturer, you must conduct an initial performance test to demonstrate compliance with the applicable emission standards within 1 year of such action.

(2) If you are an owner or operator of a stationary CI internal combustion engine greater than or equal to 100 HP and less than or equal to 500 HP, you must keep a maintenance plan and records of conducted maintenance and must, to the extent practicable, maintain and operate the engine in a manner consistent with good air pollution control practice for minimizing emissions. In addition, you must conduct an initial performance test to demonstrate compliance with the applicable emission standards within 1 year of startup, or within 1 year after an engine and control device is no longer installed, configured, operated, and maintained in accordance with the manufacturer's emission-related written instructions, or within 1 year after you change emission-related settings in a way that is not permitted by the manufacturer.

(3) If you are an owner or operator of a stationary CI internal combustion engine greater than 500 HP, you must keep a maintenance plan and records of conducted maintenance and must, to the extent practicable, maintain and operate the engine in a manner consistent with good air pollution control practice for minimizing emissions. In addition, you must conduct an initial performance test to demonstrate compliance with the applicable emission standards within 1 year of startup, or within 1 year after an engine and control device is no longer installed, configured, operated, and maintained in accordance with the manufacturer's emission-related written instructions, or within 1 year after you change emission-related settings in a way that is not permitted by the manufacturer. You must conduct subsequent performance testing every 8,760 hours of engine operation or 3 years, whichever comes first, thereafter to demonstrate compliance with the applicable emission standards.

[71 FR 39172, July 11, 2006, as amended at 76 FR 37970, June 28, 2011]

Back to Top

Testing Requirements for Owners and Operators

Back to Top

§ 60.4212 What test methods and other procedures must I use if I am an owner or operator of a stationary CI internal combustion engine with a displacement of less than 30 liters per cylinder?

Owners and operators of stationary CI ICE with a displacement of less than 30 liters per cylinder who conduct performance tests pursuant to this subpart must do so according to paragraphs (a) through (e) of this section.

(a) The performance test must be conducted according to the in-use testing procedures in 40 CFR part 1039, subpart F, for stationary CI ICE with a displacement of less than 10 liters per cylinder, and according to 40 CFR part 1042, subpart F, for stationary CI ICE with a displacement of greater than or equal to 10 liters per cylinder and less than 30 liters per cylinder.

(b) Exhaust emissions from stationary CI ICE that are complying with the emission standards for new CI engines in 40 CFR part 1039 must not exceed the not-to-exceed (NTE) standards for the same model year and maximum engine power as required in 40 CFR 1039.101(e) and 40 CFR 1039.102(g)(1), except as specified in 40 CFR 1039.104(d). This requirement starts when NTE requirements take effect for nonroad diesel engines under 40 CFR part 1039.

(c) Exhaust emissions from stationary CI ICE that are complying with the emission standards for new CI engines in 40 CFR 89.112 or 40 CFR 94.8, as applicable, must not exceed the NTE numerical requirements, rounded to the same number of decimal places as the applicable standard in 40 CFR 89.112 or 40 CFR 94.8, as applicable, determined from the following equation:

$$\text{NTE requirement for each pollutant} = (1.25) \times (\text{STD}) \qquad \text{(Eq. 1)}$$

Where:

STD = The standard specified for that pollutant in 40 CFR 89.112 or 40 CFR 94.8, as applicable.

Alternatively, stationary CI ICE that are complying with the emission standards for new CI engines in 40 CFR 89.112 or 40 CFR 94.8 may follow the testing procedures specified in § 60.4213 of this subpart, as appropriate.

(d) Exhaust emissions from stationary CI ICE that are complying with the emission standards for pre-2007 model year engines in § 60.4204(a), § 60.4205(a), or § 60.4205(c) must not exceed the NTE numerical requirements, rounded to the same number of decimal places as the applicable standard in § 60.4204(a), § 60.4205(a), or § 60.4205(c), determined from the equation in paragraph (c) of this section.

Where:

STD = The standard specified for that pollutant in § 60.4204(a), § 60.4205(a), or § 60.4205(c).

Alternatively, stationary CI ICE that are complying with the emission standards for pre-2007 model year engines in § 60.4204(a), § 60.4205(a), or § 60.4205(c) may follow the testing procedures specified in § 60.4213, as appropriate.

(e) Exhaust emissions from stationary CI ICE that are complying with the emission standards for new CI engines in 40 CFR part 1042 must not exceed the NTE standards for the same model year and maximum engine power as required in 40 CFR 1042.101(c).

Performance testing is not required on IFL's fire pump engine. The requirements of performance testing are not applicable.

[71 FR 39172, July 11, 2006, as amended at 76 FR 37971, June 28, 2011]

Back to Top

§ 60.4213 What test methods and other procedures must I use if I am an owner or operator of a stationary CI internal combustion engine with a displacement of greater than or equal to 30 liters per cylinder?

Owners and operators of stationary CI ICE with a displacement of greater than or equal to 30 liters per cylinder must conduct performance tests according to paragraphs (a) through (f) of this section.

(a) Each performance test must be conducted according to the requirements in § 60.8 and under the specific conditions that this subpart specifies in table 7. The test must be conducted within 10 percent of 100 percent peak (or the highest achievable) load.

(b) You may not conduct performance tests during periods of startup, shutdown, or malfunction, as specified in § 60.8(c).

(c) You must conduct three separate test runs for each performance test required in this section, as specified in § 60.8(f). Each test run must last at least 1 hour.

(d) To determine compliance with the percent reduction requirement, you must follow the requirements as specified in paragraphs (d)(1) through (3) of this section.

(1) You must use Equation 2 of this section to determine compliance with the percent reduction requirement:

$$\frac{C_i - C_o}{C_i} \times 100 = R \qquad \text{(Eq. 2)}$$

Where:

C_i = concentration of NO_x or PM at the control device inlet,

C_o = concentration of NO_x or PM at the control device outlet, and

R = percent reduction of NO_x or PM emissions.

(2) You must normalize the NO_x or PM concentrations at the inlet and outlet of the control device to a dry basis and to 15 percent oxygen (O_2) using Equation 3 of this section, or an equivalent percent carbon dioxide (CO_2) using the procedures described in paragraph (d)(3) of this section.

$$C_{adj} = C_d \frac{5.9}{20.9 - \% O_2} \qquad \text{(Eq. 3)}$$

Where:

C_{adj} = Calculated NO_x or PM concentration adjusted to 15 percent O_2 .

C_d = Measured concentration of NO_x or PM, uncorrected.

5.9 = 20.9 percent O_2 –15 percent O_2 , the defined O_2 correction value, percent.

$\%O_2$ = Measured O_2 concentration, dry basis, percent.

(3) If pollutant concentrations are to be corrected to 15 percent O_2 and CO_2 concentration is measured in lieu of O_2concentration measurement, a CO_2 correction factor is needed. Calculate the CO_2 correction factor as described in paragraphs (d)(3)(i) through (iii) of this section.

(i) Calculate the fuel-specific F_o value for the fuel burned during the test using values obtained from Method 19, Section 5.2, and the following equation:

$$F_o = \frac{0.209 F_d}{F_c} \qquad \text{(Eq. 4)}$$

Where:

F_o = Fuel factor based on the ratio of O_2 volume to the ultimate CO_2 volume produced by the fuel at zero percent excess air.

0.209 = Fraction of air that is O_2 , percent/100.

F_d = Ratio of the volume of dry effluent gas to the gross calorific value of the fuel from Method 19, dsm^3 /J (dscf/10^6 Btu).

F_c = Ratio of the volume of CO_2 produced to the gross calorific value of the fuel from Method 19, dsm^3 /J (dscf/10^6 Btu).

(ii) Calculate the CO_2 correction factor for correcting measurement data to 15 percent O_2 , as follows:

$$X_{CO_2} = \frac{5.9}{F_o} \qquad \text{(Eq. 5)}$$

Where:

X_{CO2} = CO_2 correction factor, percent.

5.9 = 20.9 percent O_2 –15 percent O_2 , the defined O_2 correction value, percent.

(iii) Calculate the NO_x and PM gas concentrations adjusted to 15 percent O_2 using CO_2 as follows:

$$C_{adj} = C_d \frac{X_{CO_2}}{\%CO_2} \qquad \text{(Eq. 6)}$$

Where:

C_{adj} = Calculated NO_x or PM concentration adjusted to 15 percent O_2 .

C_d = Measured concentration of NO_x or PM, uncorrected.

$\%CO_2$ = Measured CO_2 concentration, dry basis, percent.

(e) To determine compliance with the NO_x mass per unit output emission limitation, convert the concentration of NO_x in the engine exhaust using Equation 7 of this section:

$$ER = \frac{C_d \times 1.912 \times 10^{-3} \times Q \times T}{\text{KW-hour}} \qquad \text{(Eq. 7)}$$

Where:

ER = Emission rate in grams per KW-hour.

C_d = Measured NO_x concentration in ppm.

1.912×10^{-3} = Conversion constant for ppm NO_x to grams per standard cubic meter at 25 degrees Celsius.

Q = Stack gas volumetric flow rate, in standard cubic meter per hour.

T = Time of test run, in hours.

KW-hour = Brake work of the engine, in KW-hour.

(f) To determine compliance with the PM mass per unit output emission limitation, convert the concentration of PM in the engine exhaust using Equation 8 of this section:

$$ER = \frac{C_{adj} \times Q \times T}{\text{KW-hour}} \qquad \text{(Eq. 8)}$$

Where:

ER = Emission rate in grams per KW-hour.

C_{adj} = Calculated PM concentration in grams per standard cubic meter.

Q = Stack gas volumetric flow rate, in standard cubic meter per hour.

T = Time of test run, in hours.

KW-hour = Energy output of the engine, in KW.

[71 FR 39172, July 11, 2006, as amended at 76 FR 37971, June 28, 2011]

Back to Top

Performance testing is not required on IFL's fire pump engine. The requirements of performance testing are not applicable.

Notification, Reports, and Records for Owners and Operators

Back to Top

§ 60.4214 What are my notification, reporting, and recordkeeping requirements if

Link to an amendment published at 78 FR 6696, Jan. 30, 2013.

(a) Owners and operators of non-emergency stationary CI ICE that are greater than 2,237 KW (3,000 HP), or have a displacement of greater than or equal to 10 liters per cylinder, or are pre-2007 model year engines that are greater than 130 KW (175 HP) and not certified, must meet the requirements of paragraphs (a)(1) and (2) of this section.

(1) Submit an initial notification as required in § 60.7(a)(1). The notification must include the information in paragraphs (a)(1)(i) through (v) of this section.

(i) Name and address of the owner or operator;

(ii) The address of the affected source;

(iii) Engine information including make, model, engine family, serial number, model year, maximum engine power, and engine displacement;

(iv) Emission control equipment; and

(v) Fuel used.

(2) Keep records of the information in paragraphs (a)(2)(i) through (iv) of this section.

(i) All notifications submitted to comply with this subpart and all documentation supporting any notification.

(ii) Maintenance conducted on the engine.

(iii) If the stationary CI internal combustion is a certified engine, documentation from the manufacturer that the engine is certified to meet the emission standards.

(iv) If the stationary CI internal combustion is not a certified engine, documentation that the engine meets the emission standards.

(b) If the stationary CI internal combustion engine is an emergency stationary internal combustion engine, the owner or operator is not required to submit an initial notification. Starting with the model years in table 5 to this subpart, if the emergency engine does not meet the standards applicable to non-emergency engines in the applicable model year, the owner or operator must keep records of the operation of the engine in emergency and non-emergency service that are recorded through the non-resettable hour meter. The owner must record the time of operation of the engine and the reason the engine was in operation during that time.

(c) If the stationary CI internal combustion engine is equipped with a diesel particulate filter, the owner or operator must keep records of any corrective action taken after the backpressure monitor has notified the owner or operator that the high backpressure limit of the engine is approached.

IFL's fire pump engine is classified as an emergency stationary internal combustion engine. As stated in 60.4214(b) above, IFL is not required to submit an initial notification. IFL will keep records of the both the time of and reason for operation of the fire pump engine in both emergency and non-emergency service that are recorded through the non-resettable hour meter installed on the engine.

Back to Top

Special Requirements

Back to Top

§ 60.4215 What requirements must I meet for engines used in Guam, American Samoa, or the Commonwealth of the Northern Mariana Islands?

(a) Stationary CI ICE with a displacement of less than 30 liters per cylinder that are used in Guam, American Samoa, or the Commonwealth of the Northern Mariana Islands are required to meet the applicable emission standards in §§ 60.4202 and 60.4205.

(b) Stationary CI ICE that are used in Guam, American Samoa, or the Commonwealth of the Northern Mariana Islands are not required to meet the fuel requirements in § 60.4207.

(c) Stationary CI ICE with a displacement of greater than or equal to 30 liters per cylinder that are used in Guam, American Samoa, or the Commonwealth of the Northern Mariana Islands are required to meet the following emission standards:

(1) For engines installed prior to January 1, 2012, limit the emissions of NO_x in the stationary CI internal combustion engine exhaust to the following:

(i) 17.0 g/KW-hr (12.7 g/HP-hr) when maximum engine speed is less than 130 rpm;

(ii) $45 \cdot n^{-0.2}$ g/KW-hr ($34 \cdot n^{-0.2}$ g/HP-hr) when maximum engine speed is 130 or more but less than 2,000 rpm, where n is maximum engine speed; and

(iii) 9.8 g/KW-hr (7.3 g/HP-hr) when maximum engine speed is 2,000 rpm or more.

(2) For engines installed on or after January 1, 2012, limit the emissions of NO_x in the stationary CI internal combustion engine exhaust to the following:

(i) 14.4 g/KW-hr (10.7 g/HP-hr) when maximum engine speed is less than 130 rpm;

(ii) $44 \cdot n^{-0.23}$ g/KW-hr ($33 \cdot n^{-0.23}$ g/HP-hr) when maximum engine speed is greater than or equal to 130 but less than 2,000 rpm and where n is maximum engine speed; and

(iii) 7.7 g/KW-hr (5.7 g/HP-hr) when maximum engine speed is greater than or equal to 2,000 rpm.

(3) Limit the emissions of PM in the stationary CI internal combustion engine exhaust to 0.40 g/KW-hr (0.30 g/HP-hr).

[71 FR 39172, July 11, 2006, as amended at 76 FR 37971, June 28, 2011]

IFL does not own or operate any engines in the areas listed above. This section does not apply.

Back to Top

§ 60.4216 What requirements must I meet for engines used in Alaska?

(a) Prior to December 1, 2010, owners and operators of stationary CI ICE with a displacement of less than 30 liters per cylinder located in areas of Alaska not accessible by the FAHS should refer to 40 CFR part 69 to determine the diesel fuel requirements applicable to such engines.

(b) Except as indicated in paragraph (c) of this section, manufacturers, owners and operators of stationary CI ICE with a displacement of less than 10 liters per cylinder located in areas of Alaska not accessible by the FAHS may meet the requirements of this subpart by manufacturing and installing engines meeting the requirements of 40 CFR parts 94 or 1042, as appropriate, rather than the otherwise applicable requirements of 40 CFR parts 89 and 1039, as indicated in sections §§ 60.4201(f) and 60.4202(g) of this subpart.

(c) Manufacturers, owners and operators of stationary CI ICE that are located in areas of Alaska not accessible by the FAHS may choose to meet the applicable emission standards for emergency engines in § 60.4202 and § 60.4205, and not those for non-emergency engines in § 60.4201 and § 60.4204, except that for 2014 model year and later non-emergency CI ICE, the owner or operator of any such engine that was not certified as meeting Tier 4 PM standards, must meet the applicable requirements for PM in § 60.4201 and § 60.4204 or install a PM emission control device that achieves PM emission reductions of 85 percent, or 60 percent for engines with a displacement of greater than or equal to 30 liters per cylinder, compared to engine-out emissions.

(d) The provisions of § 60.4207 do not apply to owners and operators of pre-2014 model year stationary CI ICE subject to this subpart that are located in areas of Alaska not accessible by the FAHS.

(e) The provisions of § 60.4208(a) do not apply to owners and operators of stationary CI ICE subject to this subpart that are located in areas of Alaska not accessible by the FAHS until after December 31, 2009.

(f) The provisions of this section and § 60.4207 do not prevent owners and operators of stationary CI ICE subject to this subpart that are located in areas of Alaska not accessible by the FAHS from using fuels mixed with used lubricating oil, in volumes of up to 1.75 percent of the total fuel. The sulfur content of the used lubricating oil must be less than 200 parts per million. The used lubricating oil must meet the on-specification levels and properties for used oil in 40 CFR 279.11.

IFL does not own or operate any engines in the area listed above. This section does not apply.

[76 FR 37971, June 28, 2011]

Back to Top

§ 60.4217 What emission standards must I meet if I am an owner or operator of a stationary internal combustion engine using special fuels?

Owners and operators of stationary CI ICE that do not use diesel fuel may petition the Administrator for approval of alternative emission standards, if they can demonstrate that they use a fuel that is not the fuel on which the manufacturer of the engine certified the engine and that the engine cannot meet the applicable standards required in § 60.4204 or § 60.4205 using such fuels and that use of such fuel is appropriate and reasonably necessary, considering cost, energy, technical feasibility, human health and environmental, and other factors, for the operation of the engine.

[76 FR 37972, June 28, 2011]

IFL will not be using special fuels. This section does not apply.

Back to Top

General Provisions

Back to Top

§ 60.4218 What parts of the General Provisions apply to me?

Table 8 to this subpart shows which parts of the General Provisions in §§ 60.1 through 60.19 apply to you.

IFL understands that sections of the general provisions of Part 60 apply to them as listed in Table 8. IFL will comply with any requirements listed in these sections.

DEFINITIONS

Back to Top

§ 60.4219 What definitions apply to this subpart?

Link to an amendment published at 78 FR 6696, Jan. 30, 2013.

As used in this subpart, all terms not defined herein shall have the meaning given them in the CAA and in subpart A of this part.

Certified emissions life means the period during which the engine is designed to properly function in terms of reliability and fuel consumption, without being remanufactured, specified as a number of hours of operation or calendar years, whichever comes first. The values for certified emissions life for stationary CI ICE with a displacement of less than 10 liters per cylinder are given in 40 CFR 1039.101(g). The values for certified emissions life for stationary CI ICE with a displacement of greater than or equal to 10 liters per cylinder and less than 30 liters per cylinder are given in 40 CFR 94.9(a).

Combustion turbine means all equipment, including but not limited to the turbine, the fuel, air, lubrication and exhaust gas systems, control systems (except emissions control equipment), and any ancillary components and sub-components comprising any simple cycle combustion turbine, any regenerative/recuperative cycle combustion turbine, the combustion turbine portion of any cogeneration cycle combustion system, or the combustion turbine portion of any combined cycle steam/electric generating system.

Compression ignition means relating to a type of stationary internal combustion engine that is not a spark ignition engine.

Date of manufacture means one of the following things:

(1) For freshly manufactured engines and modified engines, date of manufacture means the date the engine is originally produced.

(2) For reconstructed engines, date of manufacture means the date the engine was originally produced, except as specified in paragraph (3) of this definition.

(3) Reconstructed engines are assigned a new date of manufacture if the fixed capital cost of the new and refurbished components exceeds 75 percent of the fixed capital cost of a comparable entirely new facility. An engine that is produced from a previously used engine block does not retain the date of manufacture of the engine in which the engine block was previously used if the engine is produced using all new components except for the engine block. In these cases, the date of manufacture is the date of reconstruction or the date the new engine is produced.

Diesel fuel means any liquid obtained from the distillation of petroleum with a boiling point of approximately 150 to 360 degrees Celsius. One commonly used form is number 2 distillate oil.

Diesel particulate filter means an emission control technology that reduces PM emissions by trapping the particles in a flow filter substrate and periodically removes the collected particles by either physical action or by oxidizing (burning off) the particles in a process called regeneration.

Emergency stationary internal combustion engine means any stationary internal combustion engine whose operation is limited to emergency situations and required testing and maintenance. Examples include stationary ICE used to produce power for critical networks or equipment (including power supplied to portions of a facility) when electric power from the local utility (or the normal power source, if the facility runs on its own power production) is interrupted, or stationary ICE used to pump water in the case of fire or flood, etc. Stationary CI ICE used to supply power to an electric grid or that supply power as part of a financial arrangement with another entity are not considered to be emergency engines.

Engine manufacturer means the manufacturer of the engine. See the definition of “manufacturer” in this section.

Fire pump engine means an emergency stationary internal combustion engine certified to NFPA requirements that is used to provide power to pump water for fire suppression or protection.

Freshly manufactured engine means an engine that has not been placed into service. An engine becomes freshly manufactured when it is originally produced.

Installed means the engine is placed and secured at the location where it is intended to be operated.

Manufacturer has the meaning given in section 216(1) of the Act. In general, this term includes any person who manufactures a stationary engine for sale in the United States or otherwise introduces a new stationary engine into commerce in the United States. This includes importers who import stationary engines for sale or resale.

Maximum engine power means maximum engine power as defined in 40 CFR 1039.801.

Model year means the calendar year in which an engine is manufactured (see “date of manufacture”), except as follows:

(1) Model year means the annual new model production period of the engine manufacturer in which an engine is manufactured (see “date of manufacture”), if the annual new model production period is different than the calendar year and includes January 1 of the calendar year for which the model year is named. It may not begin before January 2 of the previous calendar year and it must end by December 31 of the named calendar year.

(2) For an engine that is converted to a stationary engine after being placed into service as a nonroad or other non-stationary engine, model year means the calendar year or new model production period in which the engine was manufactured (see “date of manufacture”).

Other internal combustion engine means any internal combustion engine, except combustion turbines, which is not a reciprocating internal combustion engine or rotary internal combustion engine.

Reciprocating internal combustion engine means any internal combustion engine which uses reciprocating motion to convert heat energy into mechanical work.

Rotary internal combustion engine means any internal combustion engine which uses rotary motion to convert heat energy into mechanical work.

Spark ignition means relating to a gasoline, natural gas, or liquefied petroleum gas fueled engine or any other type of engine with a spark plug (or other sparking device) and with operating characteristics significantly similar to the theoretical Otto combustion

cycle. Spark ignition engines usually use a throttle to regulate intake air flow to control power during normal operation. Dual-fuel engines in which a liquid fuel (typically diesel fuel) is used for CI and gaseous fuel (typically natural gas) is used as the primary fuel at an annual average ratio of less than 2 parts diesel fuel to 100 parts total fuel on an energy equivalent basis are spark ignition engines.

Stationary internal combustion engine means any internal combustion engine, except combustion turbines, that converts heat energy into mechanical work and is not mobile. Stationary ICE differ from mobile ICE in that a stationary internal combustion engine is not a nonroad engine as defined at 40 CFR 1068.30 (excluding paragraph (2)(ii) of that definition), and is not used to propel a motor vehicle, aircraft, or a vehicle used solely for competition. Stationary ICE include reciprocating ICE, rotary ICE, and other ICE, except combustion turbines.

Subpart means 40 CFR part 60, subpart IIII.

[71 FR 39172, July 11, 2006, as amended at 76 FR 37972, June 28, 2011]

IFL has read and understands these definitions and used them in providing this regulatory analysis.

Back to Top

Table 1 to Subpart IIII of Part 60—Emission Standards for Stationary Pre-2007 Model Year Engines With a Displacement of <10 Liters per Cylinder and 2007-2010 Model Year Engines >2,237 KW (3,000 HP) and With a Displacement of <10 Liters per Cylinder

[As stated in §§ 60.4201(b), 60.4202(b), 60.4204(a), and 60.4205(a), you must comply with the following emission standards]

Maximum engine power	Emission standards for stationary pre-2007 model year engines with a displacement of <10 liters per cylinder and 2007-2010 model year engines >2,237 KW (3,000 HP) and with a displacement of <10 liters per cylinder in g/KW-hr (g/HP-hr)				
	NMHC + NO_X	HC	NO_X	CO	PM
KW<8 (HP<11)	10.5 (7.8)			8.0 (6.0)	1.0 (0.75)
8≤KW<19 (11≤HP<25)	9.5 (7.1)			6.6 (4.9)	0.80 (0.60)
19≤KW<37 (25≤HP<50)	9.5 (7.1)			5.5 (4.1)	0.80 (0.60)
37≤KW<56 (50≤HP<75)			9.2 (6.9)		
56≤KW<75 (75≤HP<100)			9.2 (6.9)		
75≤KW<130 (100≤HP<175)			9.2 (6.9)		
130≤KW<225 (175≤HP<300)		1.3 (1.0)	9.2 (6.9)	11.4 (8.5)	0.54 (0.40)
225≤KW<450 (300≤HP<600)		1.3 (1.0)	9.2 (6.9)	11.4 (8.5)	0.54 (0.40)
450≤KW≤560 (600≤HP≤750)		1.3 (1.0)	9.2 (6.9)	11.4 (8.5)	0.54 (0.40)
KW>560 (HP>750)		1.3 (1.0)	9.2 (6.9)	11.4 (8.5)	0.54 (0.40)

IFL's fire pump engine was manufactured after 2010. Table 1 does not apply.

Back to Top

Table 2 to Subpart IIII of Part 60—Emission Standards for 2008 Model Year and Later Emergency Stationary CI ICE <37 KW (50 HP) With a Displacement of <10 Liters per Cylinder

[As stated in § 60.4202(a)(1), you must comply with the following emission standards]

Engine power	Emission standards for 2008 model year and later emergency stationary CI ICE <37 KW (50 HP) with a displacement of <10 liters per cylinder in g/KW-hr (g/HP-hr)			
	Model year(s)	NO_X+ NMHC	CO	PM
KW<8 (HP<11)	2008+	7.5 (5.6)	8.0 (6.0)	0.40 (0.30)
8≤KW<19 (11≤HP<25)	2008+	7.5 (5.6)	6.6 (4.9)	0.40 (0.30)
19≤KW<37 (25≤HP<50)	2008+	7.5 (5.6)	5.5 (4.1)	0.30 (0.22)

IFL's fire pump engine size is greater than 50 HP. Table 2 does not apply.

Back to Top

Table 3 to Subpart IIII of Part 60—Certification Requirements for Stationary Fire Pump Engines

As stated in § 60.4202(d), you must certify new stationary fire pump engines beginning with the following model years:

Engine power	Starting model year engine manufacturers must certify new stationary fire pump engines according to § 60.4202(d)[1]
KW<75 (HP<100)	2011
75≤KW<130 (100≤HP<175)	2010
130≤KW≤560 (175≤HP≤750)	2009
KW>560 (HP>750)	2008

[1]Manufacturers of fire pump stationary CI ICE with a maximum engine power greater than or equal to 37 kW (50 HP) and less than 450 KW (600 HP) and a rated speed of greater than 2,650 revolutions per minute (rpm) are not required to certify such engines until three model years following the model year indicated in this Table 3 for engines in the applicable engine power category.

[71 FR 39172, July 11, 2006, as amended at 76 FR 37972, June 28, 2011]

IFL has purchased a fire pump engine which was manufactured after 2009 and has been certified according to 60.4202(d).

Back to Top

Table 4 to Subpart IIII of Part 60—Emission Standards for Stationary Fire Pump Engines

[As stated in §§ 60.4202(d) and 60.4205(c), you must comply with the following emission standards for stationary fire pump engines]

Maximum engine power	Model year(s)	NMHC + NO_X	CO	PM
KW<8 (HP<11)	2010 and earlier	10.5 (7.8)	8.0 (6.0)	1.0 (0.75)
	2011+	7.5 (5.6)		0.40 (0.30)
8≤KW<19 (11≤HP<25)	2010 and earlier	9.5 (7.1)	6.6 (4.9)	0.80 (0.60)
	2011+	7.5 (5.6)		0.40 (0.30)
19≤KW<37 (25≤HP<50)	2010 and earlier	9.5 (7.1)	5.5 (4.1)	0.80 (0.60)
	2011+	7.5 (5.6)		0.30 (0.22)
37≤KW<56 (50≤HP<75)	2010 and earlier	10.5 (7.8)	5.0 (3.7)	0.80 (0.60)
	2011+ [1]	4.7 (3.5)		0.40 (0.30)
56≤KW<75 (75≤HP<100)	2010 and earlier	10.5 (7.8)	5.0 (3.7)	0.80 (0.60)
	2011+ [1]	4.7 (3.5)		0.40 (0.30)
75≤KW<130 (100≤HP<175)	2009 and earlier	10.5 (7.8)	5.0 (3.7)	0.80 (0.60)
	2010+ [2]	4.0 (3.0)		0.30 (0.22)
130≤KW<225 (175≤HP<300)	2008 and earlier	10.5 (7.8)	3.5 (2.6)	0.54 (0.40)
	2009+ [3]	4.0 (3.0)		0.20 (0.15)
225≤KW<450 (300≤HP<600)	2008 and earlier	10.5 (7.8)	3.5 (2.6)	0.54 (0.40)
	2009+ [3]	4.0 (3.0)		0.20 (0.15)
450≤KW≤560 (600≤HP≤750)	2008 and earlier	10.5 (7.8)	3.5 (2.6)	0.54 (0.40)
	2009+	4.0 (3.0)		0.20 (0.15)
KW>560 (HP>750)	2007 and earlier	10.5 (7.8)	3.5 (2.6)	0.54 (0.40)
	2008+	6.4 (4.8)		0.20 (0.15)

[1] For model years 2011-2013, manufacturers, owners and operators of fire pump stationary CI ICE in this engine power category with a rated speed of greater than 2,650 revolutions per minute (rpm) may comply with the emission limitations for 2010 model year engines.

[2] For model years 2010-2012, manufacturers, owners and operators of fire pump stationary CI ICE in this engine power category with a rated speed of greater than 2,650 rpm may comply with the emission limitations for 2009 model year engines.

[3] In model years 2009-2011, manufacturers of fire pump stationary CI ICE in this engine power category with a rated speed of greater than 2,650 rpm may comply with the emission limitations for 2008 model year engines.

IFL is required to meet the emission limitations highlighted above. The fire pump engine at IFL has been certified to meet the applicable emission limitations of Table 4 above. IFL has complied with these emission limitations by purchasing a fire pump engine certified to meet these limits.

Back to Top

Table 5 to Subpart IIII of Part 60—Labeling and Recordkeeping Requirements for New Stationary Emergency Engines

[You must comply with the labeling requirements in § 60.4210(f) and the recordkeeping requirements in § 60.4214(b) for new emergency stationary CI ICE beginning in the following model years:]

Engine power	Starting model year
19≤KW<56 (25≤HP<75)	2013
56≤KW<130 (75≤HP<175)	2012
KW≥130 (HP≥175)	2011

Table 5 applies to manufacturer engine certification and does not apply to IFL.

Back to Top

Table 6 to Subpart IIII of Part 60—Optional 3-Mode Test Cycle for Stationary Fire Pump Engines

[As stated in § 60.4210(g), manufacturers of fire pump engines may use the following test cycle for testing fire pump engines:]

Mode No.	Engine speed [1]	Torque (percent) [2]	Weighting factors
1	Rated	100	0.30
2	Rated	75	0.50
3	Rated	50	0.20

[1] Engine speed: ±2 percent of point.

[2] Torque: NFPA certified nameplate HP for 100 percent point. All points should be ±2 percent of engine percent load value.

Table 6 applies to manufacturer engine certification and does not apply to IFL.

Back to Top

Table 7 to Subpart IIII of Part 60—Requirements for Performance Tests for Stationary CI ICE With a Displacement of ≥30 Liters per Cylinder

[As stated in § 60.4213, you must comply with the following requirements for performance tests for stationary CI ICE with a displacement of ≥30 liters per cylinder:]

For each	Complying with the requirement to	You must	Using	According to the following requirements
1. Stationary CI internal combustion	a. Reduce NO_Xemissions by 90 percent or more	i. Select the sampling port location and the number of traverse	(1) Method 1 or 1A of 40 CFR part 60, appendix A	(a) Sampling sites must be located at the inlet and outlet of the control device.

engine with a displacement of≥ 30 liters per cylinder		points;		
		ii. Measure O_2at the inlet and outlet of the control device;	(2) Method 3, 3A, or 3B of 40 CFR part 60, appendix A	(b) Measurements to determine O_2concentration must be made at the same time as the measurements for NO_Xconcentration.
		iii. If necessary, measure moisture content at the inlet and outlet of the control device; and,	(3) Method 4 of 40 CFR part 60, appendix A, Method 320 of 40 CFR part 63, appendix A, or ASTM D 6348-03 (incorporated by reference, see § 60.17)	(c) Measurements to determine moisture content must be made at the same time as the measurements for NO_Xconcentration.
		iv. Measure NO_Xat the inlet and outlet of the control device	(4) Method 7E of 40 CFR part 60, appendix A, Method 320 of 40 CFR part 63, appendix A, or ASTM D 6348-03 (incorporated by reference, see § 60.17)	(d) NO_Xconcentration must be at 15 percent O_2, dry basis. Results of this test consist of the average of the three 1-hour or longer runs.
	b. Limit the concentration of NO_Xin the stationary CI internal combustion engine exhaust.	i. Select the sampling port location and the number of traverse points;	(1) Method 1 or 1A of 40 CFR part 60, appendix A	(a) If using a control device, the sampling site must be located at the outlet of the control device.
		ii. Determine the O_2concentration of the stationary internal combustion engine exhaust at the sampling port location; and,	(2) Method 3, 3A, or 3B of 40 CFR part 60, appendix A	(b) Measurements to determine O_2concentration must be made at the same time as the measurement for NO_Xconcentration.
		iii. If necessary, measure moisture content of the stationary internal combustion engine exhaust at the sampling port location; and,	(3) Method 4 of 40 CFR part 60, appendix A, Method 320 of 40 CFR part 63, appendix A, or ASTM D 6348-03 (incorporated by reference, see § 60.17)	(c) Measurements to determine moisture content must be made at the same time as the measurement for NO_Xconcentration.
		iv. Measure NO_Xat the exhaust of the stationary internal combustion engine	(4) Method 7E of 40 CFR part 60, appendix A, Method 320 of 40 CFR part 63, appendix A, or ASTM D 6348-03 (incorporated by reference, see § 60.17)	(d) NO_Xconcentration must be at 15 percent O_2, dry basis. Results of this test consist of the average of the three 1-hour or longer runs.

	c. Reduce PM emissions by 60 percent or more	i. Select the sampling port location and the number of traverse points;	(1) Method 1 or 1A of 40 CFR part 60, appendix A	(a) Sampling sites must be located at the inlet and outlet of the control device.
		ii. Measure O_2at the inlet and outlet of the control device;	(2) Method 3, 3A, or 3B of 40 CFR part 60, appendix A	(b) Measurements to determine O_2concentration must be made at the same time as the measurements for PM concentration.
		iii. If necessary, measure moisture content at the inlet and outlet of the control device; and	(3) Method 4 of 40 CFR part 60, appendix A	(c) Measurements to determine and moisture content must be made at the same time as the measurements for PM concentration.
		iv. Measure PM at the inlet and outlet of the control device	(4) Method 5 of 40 CFR part 60, appendix A	(d) PM concentration must be at 15 percent O_2, dry basis. Results of this test consist of the average of the three 1-hour or longer runs.
	d. Limit the concentration of PM in the stationary CI internal combustion engine exhaust	i. Select the sampling port location and the number of traverse points;	(1) Method 1 or 1A of 40 CFR part 60, appendix A	(a) If using a control device, the sampling site must be located at the outlet of the control device.
		ii. Determine the O_2concentration of the stationary internal combustion engine exhaust at the sampling port location; and	(2) Method 3, 3A, or 3B of 40 CFR part 60, appendix A	(b) Measurements to determine O_2concentration must be made at the same time as the measurements for PM concentration.
		iii. If necessary, measure moisture content of the stationary internal combustion engine exhaust at the sampling port location; and	(3) Method 4 of 40 CFR part 60, appendix A	(c) Measurements to determine moisture content must be made at the same time as the measurements for PM concentration.
		iv. Measure PM at the exhaust of the stationary internal combustion engine	(4) Method 5 of 40 CFR part 60, appendix A	(d) PM concentration must be at 15 percent O_2, dry basis. Results of this test consist of the average of the three 1-hour or longer runs.

IFL is not required to perform performance tests; Table 7 does not apply.

Back to Top

Table 8 to Subpart IIII of Part 60—Applicability of General Provisions to Subpart IIII

[As stated in § 60.4218, you must comply with the following applicable General Provisions:]

General Provisions citation	Subject of citation	Applies to subpart	Explanation
§ 60.1	General applicability of the General Provisions	Yes	
§ 60.2	Definitions	Yes	Additional terms defined in § 60.4219.
§ 60.3	Units and abbreviations	Yes	
§ 60.4	Address	Yes	
§ 60.5	Determination of construction or modification	Yes	
§ 60.6	Review of plans	Yes	
§ 60.7	Notification and Recordkeeping	Yes	Except that § 60.7 only applies as specified in § 60.4214(a).
§ 60.8	Performance tests	Yes	Except that § 60.8 only applies to stationary CI ICE with a displacement of (≥30 liters per cylinder and engines that are not certified.
§ 60.9	Availability of information	Yes	
§ 60.10	State Authority	Yes	
§ 60.11	Compliance with standards and maintenance requirements	No	Requirements are specified in subpart IIII.
§ 60.12	Circumvention	Yes	
§ 60.13	Monitoring requirements	Yes	Except that § 60.13 only applies to stationary CI ICE with a displacement of (≥30 liters per cylinder.
§ 60.14	Modification	Yes	
§ 60.15	Reconstruction	Yes	
§ 60.16	Priority list	Yes	
§ 60.17	Incorporations by reference	Yes	
§ 60.18	General control device requirements	No	
§ 60.19	General notification and reporting requirements	Yes	

IFL is required to maintain compliance with the highlighted conditions shown in Table 8 above.

Back to Top

For questions or comments regarding e-CFR editorial content, features, or design, email ecfr@nara.gov.
For questions concerning e-CFR programming and delivery issues, email webteam@gpo.gov.

From: Derek Fleming <DFleming@bison-eng.com>
Sent: Thursday, March 28, 2013 5:49 PM
To: Daniel Pitman; Cheryl Robinson
Cc: Leo Herbert (lherbert@idahoan.com)
Subject: Idahoan Foods Submittal
Attachments: IFL 3-28-2013 Response Package.pdf

Hi Dan,

I've attached to response letter and accompanying documents in regards the issues brought up by IDEQ review of the Idaho Falls Plant permit modification application. I will also be uploading the emission inventory and modeling files to the IDEQ ftp site in a .zip files named "Idahoan Foods 3-28-2013 Attachment D". Please let me know if you have any questions or comments about the submittal.

Thank you,

Derek Fleming
Project Engineer
Bison Engineering
Helena, MT 59601
406-442-5768

BISON
ENGINEERING, INC.
1400 11TH AVENUE • HELENA, MT 59601 • 406-442-5768
FAX: 406-449-6653 • E-MAIL: bison@bison-eng.com • www.bison-eng.com

March 28, 2013

Daniel Pitman
Idaho Dept. of Environmental Quality
Air Quality Division
1410 N. Hilton
Boise, ID 83706

Dear Mr. Pitman:

RE: Response to IDEQ issues on Permit Modification Application for Idahoan Foods, LLC (Facility ID No. 019-00038, Permit No. T2-2009.0027)

On behalf of Idahoan Foods, LLC (IFL), Bison Engineering, Inc. (Bison) is submitting additional and updated information regarding the IFL air quality permit modification application for the Idaho Falls, Idaho, processing facility. This submittal is in response to issues brought forth by IDEQ personnel prior to and during a 02/12/2013 meeting to discuss the permit modification status.

Response to General Application, Emission Inventory and Modeling Issues

Issue	Response
Flaker 1,2, & 3 Vaculifts – For PM_{10} emissions reductions to be creditable in the significant impact analysis they must be based on previously modeled emission rate, not on recalculated emissions estimates that are higher than those that were previously modeled. Idahoan assumes PM_{10} equals $PM_{2.5}$ emissions. • Flaker 1 & 2 Vaculift was previously modeled at PM_{10} = 0.166 lb/hr. Recalculated PM_{10} emissions estimates in the application for these same sources, on which reductions are based, is 0.258 lb/hr (reductions will be from the addition of a new baghouse – PM_{10} is assumed to equal $PM_{2.5}$). The base emissions from which reductions are credited should be 0.166 lb/hr instead of 0.258 lb/hr.	IFL agrees with the change in methodology for the baseline on which modeled emission reductions are based. The appropriate changes have been made to the emission inventory and model to reflect these updates.

• Flaker 3 Vaculift was previously modeled at PM_{10} = 0.144 lb/hr. Recalculated PM_{10} emissions estimates in the application for this same source, on which reductions are based, are 0.246 lb/hr (reductions will be from the addition of a new baghouse – PM_{10} is assumed to equal $PM_{2.5}$). The base emissions from which reductions are credited should be 0.144 lb/hr instead of 0.246 lb/hr.	
For the vaculifts, in calculating emissions reductions due to the addition of baghouses (and cyclones) condensable particulate matter should be considered. Baghouses (and cyclones) will have insignificant condensable particulate matter emissions control. Flaker dryer emissions at Idahoan facilities have ranged from 68% to 90% condensable particulate matter. Is this indicative of the condensable fraction of particulate matter in the Flaker's Vaculifts?	IFL agrees with IDEQ's default assumption that the cyclones and baghouses provide insignificant control of condensable emissions. Flaker dryer emissions are not indicative of the dried material handling emissions. Material handling emissions were previously assumed to have insignificant condensable portions. IDEQ personnel have noted, though, that testing of similar facilities' dried material handling processes has resulted in non-negligible portions of condensable emissions. To address this concern, IFL has reviewed the list of potato processing emission sources for representative condensable emission data and has determined that the only condensable particulate test data that would apply to the dried material handling sources would be the 3/12/2004 testing of the flake packaging baghouse at the BLF-Hamer facility. The data from this test showed that 50% of the post-baghouse control emissions were condensable emissions. This fraction has been applied to the post-baghouse emissions of each of the dried material handling sources to adjust the emission rate upwards. The appropriate changes have been made to the emission inventory and model to reflect these updates.

There is filterable particulate matter emissions data for Idahoan's Lewisville plant for a Crush Vacu-lift. Is this emission data more appropriate to use as a basis to estimate emissions from the Flaker Vaculifts than the current method?	Because the Lewisville plant Crush Vacu-lift handles a different product than what will be processed at the Idaho Falls facility, the referenced data are not applicable. IFL has maintained the prior method of calculating material handling emissions except for the accounting for condensable emissions as described above.
For all new material transfer equipment emissions are estimated to be zero. Justification for these estimates should be provided.	Material transfer equipment emissions were reduced to zero for many of the new material storage and handling sources because they are designed as closed-loop systems which do not vent to the atmosphere. The pneumatic transfer equipment used with these sources requires much less air to operate than the flaker line vaculifts, partially due to the shorter transfer distances involved. This allows the equipment to be constructed without outside venting, as described during the 02/12/2013 meeting between IDEQ and IFL. This design basis is indicated on the facility flow diagram provided to IDEQ on 02/21/2013
Material handling throughputs before and after the modifications are listed as the same, yet the application states that the new dryers will have a "much higher production rate than those that they are replacing". Does material handling throughput increase as well? Process descriptions of all material handling equipment would be helpful.	The new dryers will not utilize any of the material handling sources which are currently included in the permit. Throughput rates for these sources will not change as a result of the modification. All new or modified processes which have emissions are considered in the emission inventory, and process rates for each piece of new or modified equipment are listed in the provided forms. IFL has submitted a process flow diagram which demonstrates order of processes and material flow throughout the plant. The one exception to this is the potential for an increased throughput of the dust collector system baghouse based upon the addition of Flaker #4. Accounting for these potential additional emissions is described below.

The throughput to the Baghouse Exhaust Dust Collector System is listed as 1 pound per hour. No assumptions or process description are provided that supports this throughput.	The emission rate for the baghouse exhaust dust collector is based upon a weeklong study that was performed on the dust collector to determine how much particulate had been removed from the air. The result of that study was that on average, 1 pound per hour was collected by the baghouse exhaust dust collector. The dust collector emissions were then back-calculated from this amount assuming 99.9% removal efficiency. As described above, IFL has now considered the potential for an increase in emissions based upon the addition of Flaker #4. To account for this, the assumed throughput of the dust collector baghouse has been increased from 1 lb/hr to 1.5 lb/hr. This change has been incorporated into the revised emission inventory included with this submittal.
Creamy mash dryer (steam heated) with cyclone. Estimated emissions are based on a PM_{10} and $PM_{2.5}$ source test conducted on 9/21/11 at Germ State's Scratch Mash dryer. The total PM emission factor is 0.44 lb/T. The test results show that 84% of the particulate is condensable particulate matter. Emission estimates assume that the cyclone will control all particulate, including condensable particulate, at 95% efficiency. Condensable particulate matter will not be controlled by the cyclone and emissions reductions have been over estimated. The cyclone may control some of the filterable particulate matter; though the 95% removal efficiency needs to be documented (Idahoan did provide cyclone removal efficiencies for the Vaculifts at 95%, but this source does not appear to be a Vaculift). Creamy Mash dryer $PM_{10}/PM_{2.5}$ emissions are currently estimated at 0.0165 lb/hr (with 95% control of condensable particulate matter). $PM_{10}/PM_{2.5}$ emissions should be closer to 0.33 lb/hr than to 0.0165 lb/hr. Process descriptions of the dryers would be helpful.	IFL agrees with IDEQ's default assumption that the cyclones and baghouses provide insignificant control of condensable emissions. The creamy mash dryer is expected to have lower levels of condensable particulate matter than the referenced dryer test on which the emission rate is based. The creamy mash dryer takes dried potato flakes, coats them with oil and re-dries them. The heat input source to the dryer is steam from the boilers and not direct-fired natural gas. Because the product has already been dried once and the unit is not combusting natural gas, IFL is expecting lower levels of condensable emissions than shown in the referenced Gem State test. The level of condensable emissions has been set to 50% of total PM. The emission inventory has been updated to account for this approach.

Plant Exhaust Emissions Changes Idahoan is shutting down two existing Bin Dryers. The bin dryers emissions exit the building through the Plant Exhaust System. The Bin Dryer emissions were previously modeled combined with emissions from 3 air makeup units (AMU). Total PM_{10} emissions modeled were 0.2475 lb/hr, a portion of which are emissions from the Bin Dryers and portion of which was from the AMUs. Current $PM_{10}/PM_{2.5}$ emission estimates from the 3 existing AMUs are 0.08 lb/hr. The previously modeled PM_{10} emission rate for the Bin Dryers combined was then 0.2475 lb/hr – 0.08 lb/hr = 0.1675 lb/hr. For the provided significant impact analysis PM_{10} emissions reductions for the bin dryers shutdown is only 0.095 lb/hr. It appears that greater emissions reductions may be credited (0.1675 vs. 0.095 lb/hr). PM_{10} is assumed to be equal to $PM_{2.5}$.	IFL agrees with IDEQ on the baseline for the calculation of emissions reductions and has updated both the emission inventory and model to reflect this.
Fire Pump Engine An emission inventory was not provided for the firewater pump engine that the modeling report references and that Leo Herbert mentioned on the phone 1/24/13. Ask the modeling group if this needs to be included in the modeling analysis.	The fire pump engine has been included in the emission inventory as well as the 1-hr NO_2 model. Due to the intermittent nature of the engine's operation, IDEQ provided a randomized, hourly emission rate file for use in modeling the impacts for 1-hr NO_2. The intermittent and infrequent nature of fire pump operation makes 24-hr and annual modeling of the emissions by conventional means overly conservative and unrealistic. Maintenance testing of the engine is scheduled for 1 hour every week.
Existing Sources Not Previously Modeled The provided emission inventory includes the following "existing sources" that are not included in the previous model: • 3 existing snifter vents • Creamy Mash Loading Station • Baghouse Flake Tank Rejects	The creamy mash loading station was mistakenly omitted from the model and has now been included in the currently submitted modeling demonstration. The baghouse flake tank rejects emissions should have been reduced to zero as was done for other sources which do not include outside vents.

Ask the modeling group if these need to be included in the modeling analysis.	During the 02/12/2013 meeting, IDEQ stated that the most recent compliance model could be updated to include the snifter vents that existed at the time but were not modeled. If that model still demonstrated compliance with the addition, then the current modeling analysis would not be required to include these existing snifter vents. The previous model has been modified to include the existing vents and still demonstrates compliance. This updated version of previous modeling is included with this submittal. The existing snifter vents were not included in the latest model.
Emission Reductions Boiler #1 CARB data gives $PM_{2.5}$ emission data as 97.6% of total particulate instead of 100% for low sulfur diesel (CARB 0.05% Sulfur). Emission reductions should be adjusted accordingly. DEQ can provide the emissions data so that Idahoan can document the emission estimate that is provided in the spreadsheet.	IFL agrees with this $PM_{2.5}/PM_{10}$ ratio and has adjusted the emission inventory and model to account for the change in emissions reductions based on the particle size data presented.
Additional modeling issues brought forth in 02/12/2013 meeting	
The elevation of boiler #1 was not consistent throughout modeling submittals.	In the latest submittal, the base elevation of Boiler #1 was adjusted to match the base elevation of the building in which it is located. Earlier submittals utilized AERMAP to calculate the elevation based on USGS terrain data.
The building vent height was modeled at 28 feet in the past but is now modeled at 27 feet.	The release height of the building vents has been updated to the original height of 27 feet.
Considering the proposed increases to stack heights for several emitting units, should reductions in stack temperature and/or velocity be considered?	IFL has considered the effects of an increased stack height on the temperature and velocity of those emission points. We believe that stack velocity will not be appreciably affected by the increase in stack height. Exhaust exit velocity is generally a calculated parameter based on stack diameter and an estimated volumetric flow rate provided either for actual or standard conditions. For a constant stack diameter, exhaust exit velocity is directly proportional to the volumetric flow rate. Assuming the exhaust gas acts essentially as an ideal gas, the

	volumetric flow rate is directly proportional to absolute temperature. As the gas cools, the volumetric flow rate decreases by the same proportion as the temperature expressed in absolute units. It is important that the proportionality is to an absolute scale temperature when determining the decrease in flow rate relative to a decrease in temperature. For example, the hottest exhaust stream of the four stacks that will be raised is 160°F. Assuming the additional stack height allows a decrease of 20°F (an unlikely assumption as explained below), the proportional temperature decrease in Fahrenheit is 12.5%. But in Kelvin, it is only a 3.2% decrease. It is also instructive to consider factors that would influence the amount of cooling that might be expected for an exhaust stack. Three primary factors are residence time, mixing, and temperature gradients. • Residence Time – The greatest increase in stack height will be 30 feet for the Flaker #4 stack. At the originally modeled exit velocity of 26.5 ft/sec, the exhaust would traverse the additional 30 feet in 1.13 seconds. This would provide very little time for cooling. • Mixing – Except for the Snifter #4 vent stack, the raised stacks will be at least four feet in diameter. Even if the exhaust streams in these stacks did experience some cooling at the stack wall, cooling of the bulk stream would take significant additional time unless the stream was very turbulent. But the stacks will be straight and turbulent flow will be minimal. • Temperature Gradients – Convective heat transfer rates are proportional to the temperature difference driving the transfer, in

	this case the exhaust gas and the inner wall of the exhaust stack. Modeled exhaust temperatures in the four raised stacks are relatively low, ranging from about 90° to 160° F. On average, these temperatures will be relatively close to ambient temperatures resulting in small temperature gradients. Note also that AERMOD analyses assume exhaust temperature is constant in all cases.[1] This is one of the many accepted inherent approximations in the model. These factors taken together tend toward a conclusion that temperature change in the exhaust streams due to increased stack heights will be minimal and that, as a result, exit velocity decreases will be minimal. Nevertheless, IFL has, for the current modeling analyses, reduced exhaust temperatures for the four raised stacks by approximately 10-20°F each. This will generally result in overestimated impacts.

Updates to the Emission Inventory

The emission inventory for this project was updated as a result of questions and concerns brought forth by IDEQ. These changes include the consideration of condensable emissions when calculating emissions for those units controlled by baghouses and cyclones and updates to the basis for emissions reductions based on past modeling. Direct responses to the issues brought up by IDEQ have been provided above.

Additional changes to the emission inventory have been made as a result of a review of the sources for emission factors used in the emission inventory. The original emission factors were generally based on the highest measured values from historical representative emission tests. These emission factors were all derived from tests performed by one particular emission testing company (Spidell) and were consistently and considerably higher than all other testing company results. For example, a single source was tested at the Idahoan Foods Lewisville facility by Spidell and then eight

[1] The one exception to this rule is if a modeler sets an unheated exhaust stream temperature equal to absolute zero, the model will assign the exhaust temperature equal to the ambient temperature for each modeled hour.

months later by a different testing company. Spidell's results in this case were 300% higher than the other company's results. Similar levels of discrepancy have been observed across similar source types that have been tested by Spidell and by other testing companies. Table 1 contains a comparison of these emission testing results. As a result of this information, IFL has re-evaluated the emission factors chosen in the original emission inventory and updated them based on measurements from testing companies other than Spidell. Table 2 presents the new emission factors used in the analysis.

Table 1: Analysis of Potato Processing Sources Emissions by Test Company

Emission Source	Spidell Factor	Non-Spidell Factor
Flakers	3.9	0.7
Fluid Bed Dryer	2.3	0.4
Snifter Vents	0.5	0.02

Table 2: Revised Potato Processing Sources Emission Rates

Emission Source	Previous Emission Factor (lb/ton)	Current Emission Factor (lb/ton)	Emission Rate Basis
Flakers	4.1	1.4	200% of non-Spidell emission factor
Fluid Bed Dryer	1.2	0.6	150% of non-Spidell emission factor
Snifter Vents	1	0.5	50% of Spidell factor with assumed 50% condensable emission portion

Updates to the 2008 Particulate Model

In response to concerns about the existing snifter vents not being included in past modeling demonstrations, Bison has updated that past model provided by IDEQ on 02/12/2013 to include the existing snifter vents.

Table 3 lists the parameters for the existing snifter vents entered into the updated 2008 modeling demonstration.

Table 3: Existing Snifter Vent Model Parameters

Model Parameter	Snifter Vent #1	Snifter Vent #2	Snifter Vent #3	Parameter Basis
Model ID	SNIFTER1	SNIFTER2	SNIFTER3	N/A
Emission Rate (lb/hr)	0.22	0.22	0.41	See EI
Stack Height (ft)	34.66	29	34.66	Measured Value
Stack Diameter (inches)	7.75"	8.375"	8.375"	Measured Value
Exit Temperature (°F)	108	106	91	Measured Value
Exit Flow Rate (acfm)	1548	904	1205	Measured Value
Base Elevation	1444.53	1444.57	1444.74	Set equal to the associated flaker stack elevation

In addition to the inclusion of the three snifter vents, the following changes were made to the baseline model:

- The header of the .SFC meteorological input file was changed from 06341 to 11059 in order for AERMOD to accept the data processed using a past version of AERMET. This change was discussed with and verbally agreed upon by Cheryl Robinson of IDEQ.
- The pollutant name was changed from PMTEN to PM10 in order for AERMOD to calculate the proper statistical form of the NAAQS.
- The flaker exhaust velocities were updated from 39.7 m/s to 12.2 m/s to account for an error which was discussed in the Statement of Basis and later corrected.

The results of the updated modeling indicated that if the existing snifter vents had been included in past modeling, the model would still have shown compliance. As a result, the three existing snifter vents will not be included in the model analysis associated with the modification application.

Table 4: Updated 2008 Baseline Modeling Results for PM_{10}, 24-hour Average

Modeling Scenario	Peak Modeled Concentration (µg/m^3)	Background Concentration (µg/m^3)	Total Ambient Concentration (µg/m^3)
Without Snifter Vents	54	73	127
Including Snifter Vents	59	73	132

Updates to Current Model – PM Model

Updates to the previously submitted $PM_{10}/PM_{2.5}$ model include the changes in the emission inventory as described above, as well as stack temperature modifications

implemented to alleviate concerns related to potential reductions in temperature due to stack height increases. Table 5 presents the original and updated stack temperatures.

Table 5: Stack Temperature Modifications

Emission Source	Original Temperature (K)	Revised Temperature (K)
Fluid Bed Dryer #1	344	331.5
Fluid Bed Dryer #2	344	331.5
Flaker #4	316	305
Snifter Vent #4	305	300

The creamy mash product transfer raw baghouse was previously omitted from the model and has now been included as an emitting unit with parameters as listed in Table 6.

Table 6: Creamy Mash Product Transfer Feed Baghouse

Model Parameter	Creamy Mash Product Transfer Feed Baghouse	Parameter Basis
Model ID	CM_RAW	N/A
PM 2.5/PM10 Emission Rate (lb/hr)	0.009	See EI
Release Type	HORIZONTAL	Source Vents Horizontally
Stack Height (ft)	40'	Actual Release Height
Stack Diameter (inches)	6"	Actual Stack Diameter
Exit Temperature (°F)	85	Estimated Exhaust Temperature
Exit Flow Rate (acfm)	1050	Manufacturer Data

Updates to Previously Submitted Model – NO_2 Model

Updates to the previously submitted NO_2 model included the changes in stack temperature related to stack height increases as described above, as well as the inclusion of the fire pump engine. Modeling of the fire pump engine was based on running one hour per week for engine testing. This was implemented into the model using a randomized emissions file provided by IDEQ. Modeling parameters for the fire pump engine are listed in Table 7.

Table 7: Fire Pump Engine Modeled Parameters

Model Parameter	Fire Pump Engine	Parameter Basis
Model ID	FPENG	N/A
NO_2/NOx Ratio	0.2	San Joaquin Valley APCD Guidance
NOx Emission Rate (lb/hr)	0.22	NSPS IIII Limitation,
Stack Height (ft)	34.66	Measured Value
Stack Diameter (inches)	7.75"	Manufacturer Data, Attached
Exit Temperature (°F)	108	Manufacturer Data, Attached
Exit Flow Rate (acfm)	1548	Manufacturer Data, Attached

Updated Modeling Results

Table 8 and Table 9 present the results of the updated modeling analyses for $PM_{2.5}$, PM_{10} and NO_2. As shown in the tables, the ambient air quality impacts of this project are shown to be under the significance or NAAQS levels for the pollutants modeled.

Table 8: Air Quality Significance Levels and Modeling Results

Pollutant	Average	Met Data	Modeling Significance Level ($\mu g/m^3$)	Modeled Impact Level ($\mu g/m^3$)	Additional Model Analysis Yes/No
PM_{10}	24-hr	2000-2004	5	0.85	No
PM_{10}	Annual	2000-2004	1	0.00	No
$PM_{2.5}$	24-hr	2000-2004	1.2	0.84	No
$PM_{2.5}$	Annual	2000-2004	0.3	0.00	No

Table 9: Air Quality Ambient Standards and Modeling Results

Pollutant	Averaging Period	Total Ambient Impacts	Background Concentration ($\mu g/m^3$)	Total NAAQS Concentration ($\mu g/m^3$)	NAAQS ($\mu g/m^3$)
NO_2	1-HR	141.33	N/A[2]	141.33	188
NO_2	Annual	44.25	N/A[1]	44.25	100

[2] Hour-of-day background concentrations were provided by IDEQ and utilized within the model for 1-hr and annual NO_2 modeling. The total ambient background concentrations include these numbers.

Other Additional Information

As required by IDEQ, a form FRA and accompanying regulatory applicability analyses have been completed for the fire pump engine in order to address the applicability of 40 CFR 60, Subpart IIII and 40 CFR 63 Subpart ZZZZ to the engine. These forms and analyses are included with this submittal under Attachment C. Manufacturer data for the fire pump engine is included in Attachment B.

The revised electronic emission inventory and modeling files will be uploaded to the IDEQ FTP site as "Idahoan Foods 3-28-2013 Attachment D.zip."

Please call me at 406-442-5768 if you have any questions about this air quality impact analysis or supporting materials.

Sincerely,
BISON ENGINEERING, INC.

Derek Fleming
Project Engineer

Attachment A: Emission Inventory
Attachment B: Fire Pump Manufacturer Data
Attachment C: Form FRA – Fire Pump Engine
Attachment D: Electronic Modeling Files and Emission Inventory – Uploaded to IDEQ FTP site as "Idahoan Foods 3-28-2013 Attachment D.zip"

cc: Leo Herbert – Idahoan Foods, LLC
Cheryl Robinson - IDEQ

ATTACHMENT A: EMISSION INVENTORY

Emissions Unit	$PM_{2.5}$ [a]		PM_{10}		SO_2		NOx		CO		VOC	
	lb/hr	T/yr	lb/hr	T/yr	lb/hr	T/yr	lb/hr	T/yr	lb/hr	T/yr	lb/hr	T/yr
Boiler No. 1	5.1	22.3	5.1	22.3	31.9	93.9	13.5	52.9	10.3	45.3	0.3	1.5
Boiler No. 2	0.4	1.8	0.4	1.8	0.02	0.1	4	17.5	4.5	19.6	0.15	0.6
Bin Dryers (2)	0.10	0.42	0.1	0.42	0.004	0.02	0.95	4.14	1.06	4.64	0.03	0.15
Dryer, Proctor and Schwartz, belt type; combined emissions dryers Nos. 1-3 (steam heated)	2.48	10.81	2.48	10.81	---	---	---	---	---	---	---	---
Dryer, Flaker/Drum type, Nos. 1-3	5.88	25.80	5.88	25.8	---	---	---	---	---	---	---	---
Air Makeup Units (3)	0.2	0.67	0.2	0.67	0.007	0.03	1.51	6.57	1.68	7.36	0.05	0.24
Bag Room Vaculift, Canline Vaculift,	0.08	0.35	0.08	0.35	---	---	---	---	---	---	---	---
Flaker Line 1 & 2 Vaculift	0.17	0.73	0.17	0.73	---	---	---	---	---	---	---	---
Flaker Line 3 Vaculift	0.14	0.63	0.14	0.63	---	---	---	---	---	---	---	---
Totals	14.55	63.51	14.55	63.51	31.93	94.05	19.96	81.11	17.54	76.9	0.53	2.49

Taken from the SOB for the PTC issued on 5/9/2008.

Source ID	Source	$PM_{2.5}$	PM_{10}	SO_2	NOx	CO	VOC	CO_2e
		T/yr	T/yr	T/yr	T/yr	T/yr	T/yr	T/yr
1	Boiler No.1 (NG)	1.98	1.98	0.16	26.03	21.87	1.43E+00	31,568
2	Boiler No.2 (NG)	0.86	0.86	0.07	11.38	9.56	6.26E-01	13,683
3, 4, 5, & 6	Four Flakers (Type 1, 2, 3, & 3)/Drum dryers (steam heated)	15.33	15.33					
7	Flaker Line 1 & 2 Vaculift	2.26E-03	2.26E-03					
8	Flaker line 3 Vaculift	2.15E-03	2.15E-03					
9	Flaker line 4 Vaculift & Baghouse	1.97E-03	1.97E-03					
10	Air Makeup Unit #1 (Waste Plant)	0.08	0.08	0.01	1.07	0.89	5.86E-02	1,281
11	Air Makeup Unit #2 (Flake Room)	0.08	0.08	0.01	1.07	0.89	5.86E-02	1,281
12	Air Makeup Unit #3 (Bag Room)	0.16	0.16	0.01	2.13	1.79	1.17E-01	2,562
13	Air Makeup Unit #4 (Warehouse)	0.21	0.21	0.02	2.81	2.36	1.55E-01	2,819
~~14~~	Baghouse, Day Tank A, Real Line	0.00E+00	0.00E+00					
~~15~~	Baghouse, Day Tank B, Real Line	0.00E+00	0.00E+00					
~~16~~	Baghouse Product Transfer to Real Line #1	0.00E+00	0.00E+00					
~~17~~	Baghouse Product Transfer to Real Line #2	0.00E+00	0.00E+00					
~~18~~	Baghouse for finish product from Real Line #1	0.00E+00	0.00E+00					
~~19~~	Real Line A Tote Loading Station	0.00E+00	0.00E+00					
14 (old 20)	Creamy Mash Loading Station	3.94E-02	3.94E-02					
~~21~~	Baghouse Finished Product Transfer, Creamy Mash	0.00E+00	0.00E+00					
15 (old 22)	Baghouse Exhaust Dust Collector System	3.94E-05	6.75E-10					
16 (old 23)	Real Line #1 fluidized bed dryer (natural gas-fired)	4.94	4.94	0.03	4.26	3.58	2.34E-01	5,125
17 (old 24)	Real Line #2 fluidized bed dryer (natural gas-fired)	4.94	4.94	0.03	4.26	3.58	2.34E-01	5,125
18 (old 25)	Cream mash dryer (steam heated) with cyclone	7.59E-01	7.59E-01					
19 (old 26)	Baghouse Flake Tank Rejects	0.00E+00	0.00E+00					
20	Snifter Vent, Flaker/drum #1	9.42E-01	9.42E-01					
21	Snifter Vent, Flaker/drum #2	9.42E-01	9.42E-01					
22	Snifter Vent, Flaker/drum #3	1.80E+00	1.80E+00					
23	Snifter Vent, Flaker/drum #4	1.80E+00	1.80E+00					
24	Fire Pump Engine	5.21E-03	5.21E-03	0.000157	0.10	0.09	3.96E-02	17
Total		**29.40**	**29.40**	**0.32**	**53.00**	**44.52**	**2.92**	**63,461**

GHG EMISSIONS

Calculation Method- Tier 1

$CO_2 = 1x10^{-3} * Fuel * HHV * EF$

NG Emission Factors

CO_2	53.02	kg/MMBtu	40 CFR 98 Table C-1
CH_4	0.001	kg/MMBtu	40 CFR 98 Table C-2
N_2O	0.0001	kg/MMBtu	40 CFR 98 Table C-2

Diesel Emission Factors

CO_2	73.96	lb/MMBtu	40 CFR 98 Table C-1
CH_4	0.003	kg/MMBtu	40 CFR 98 Table C-2
N_2O	0.0006	kg/MMBtu	40 CFR 98 Table C-2

High Heating Value

NG HHV	1.028E-03	MMBtu/scf	40 CFR 98 Table C-1
#2 Fuel Oil	1.380E-01	MMBtu/gal	40 CFR 98 Table C-1

Global Warming Potentials

CO_2	1	40 CFR 98 Appendix Table A
CH_4	21	40 CFR 98 Appendix Table A
N_2O	310	40 CFR 98 Appendix Table A

Source ID No.	Combustion Source	Capacity (MMBtu/hr)	Fuel	Annual operting hours	Throughput (scf/yr)	CO_2 (metric ton/yr)	CH_4 (metric ton/yr)	N_2O (metric ton/yr)	CO_2e (metric ton/yr)	CO_2e (ton/yr)
1	Boiler No.1 - NG	61.6	Nat. Gas	8760	524,918,287.9	28,610	0.54	0.05	28,638.5	31,568
2	Boiler No.2 - NG	26.7	Nat. Gas	8760	227,521,400.8	12,401	0.23	0.02	12,413.1	13,683
10	Air Makeup Unit #1 (Waste Plant)	2.5	Nat. Gas	8760	21,303,501.9	1,161	0.02	0.00	1,162.3	1,281
11	Air Makeup Unit #2 (Flake Room)	2.5	Nat. Gas	8760	21,303,501.9	1,161	0.02	0.00	1,162.3	1,281
12	Air Makeup Unit #3 (Bag Room)	5	Nat. Gas	8760	42,607,003.9	2,322	0.04	0.00	2,324.6	2,562
13	Air Makeup Unit #4 (Warehouse)	5.5	Nat. Gas	8760	46,867,704.3	2,555	0.05	0.00	2,557.0	2,819
16	Fluidized bed dryer Real #1	10	Nat. Gas	8760	85,214,007.8	4,645	0.09	0.01	4,649.1	5,125
17	Fluidized bed dryer Real #2	10	Nat. Gas	8760	85,214,007.8	4,645	0.09	0.01	4,649.1	5,125
24	Fire Pump Engine	2.1	Diesel	100	N/A	15	6.17E-04	1.23E-04	15.2	17
GHG TOTAL										**63,461**

Idahoan Foods, Inc. - Idaho Falls P-2012-0020 PROJ 61031

Emissions increase from new equipment

	$PM_{2.5}$		PM_{10}		NOx		SOx		CO		VOC		Lead	
Description	lb/hr	T/yr	lb/hr	T/yr	lb/hr	T/yr	lb/hr	T/yr	lb/hr	T/yr	lb/hr	T/yr	lb/hr	T/yr
New Air Makeup Unit #4 (Warehouse)	4.88E-02	0.21	4.88E-02	0.21	0.64	2.81	0.00	0.02	0.54	2.36	0.04	0.15	3.21E-06	1.41E-05
New dryers (Flaker No.4, two FBDs, and one mash dryer)	3.58	17.46	3.58	17.46	1.95	8.52	0.01	0.05	1.63	7.16	0.11	0.47	9.73E-06	4.26E-05
New Material Transfer Equipment	4.50E-04	1.97E-03	4.50E-04	1.97E-03	0.00	0.00	0.00	0.00	0.00	0.00	0.00	0.00	0.00	0.00
Fire Pump Engine	1.04E-01	5.21E-03	1.04E-01	5.21E-03	2.08	0.10	0.00	0.00	1.81	0.09	0.79	0.04	0.00	0.00
TOTAL	3.63	17.68	3.63	17.68	2.59	11.33	0.02	0.07	2.17	9.52	0.14	0.62	1.29E-05	5.67E-05

Emissions decrease from the removing equipment[1]

	$PM_{2.5}$		PM_{10}		NOx		SOx		CO		VOC		Lead	
Description	lb/hr	T/yr	lb/hr	T/yr	lb/hr	T/yr	lb/hr	T/yr	lb/hr	T/yr	lb/hr	T/yr	lb/hr	T/yr
Plant exhaust emission reductions	0.174	0.760	0.174	0.760	0.95	4.14	0.00	0.02	1.06	4.64	0.03	0.15	ND	ND
Dryer, Proctor and Schwartz, belt type; combined emissions dryers Nos. 1-3	2.480	10.810	2.480	10.810									ND	ND
Remove fuel oil from Boiler No.1 [2]	4.526	19.786	4.648	20.322	7.56	26.87	31.86	93.74	5.31	23.43	0.00	0.00	ND	ND
Installing Baghouses on flaker lines 1,2 vaculift	0.165	0.725	0.165	0.725										
Installing Baghouses on flaker lines 3 vaculift	0.144	0.629	0.144	0.629										
TOTAL	7.488	32.710	7.611	33.245	8.51	31.01	31.87	93.76	6.37	28.07	0.03	0.15	ND	ND

[1] Emissions rates from this table were taken from SOB for the 2008 PTC.

[2] The emissions rates permitted in the 2008 PTC minus the emissions rates due to burning natural gas in Boiler No. 1.

Net Emission Changes

	$PM_{2.5}$		PM_{10}		NOx		SOx		CO		VOC		Lead	
Pollutants	lb/hr	T/yr	lb/hr	T/yr	lb/hr	T/yr	lb/hr	T/yr	lb/hr	T/yr	lb/hr	T/yr	lb/hr	T/yr
Emission Changes	-3.86	-15.03	-3.98	-15.57	-5.92	-19.67	-31.85	-93.70	-4.19	-18.55	0.11	0.47	ND	ND

	$PM_{2.5}$	PM_{10}	SO_2 *	Nox*	CO	VOC
	T/yr	T/yr	T/yr	T/yr	T/yr	T/yr
Post-project PTE	29.40	29.40	0.32	53.00	44.52	2.92
Pre-project PTE	63.51	63.51	94.05	81.11	76.9	2.49
Net Emission Changes	-34.11	-34.11	-93.73	-28.11	-32.38	0.43

* This table should not be used because the calculation for natural gas combustion are based on different calcualtion methods for pre-project PTE and post-project PTE.

NG Emission Factors

NOx	100	lb/10^6 scf	AP-42, Table 1.4-1, 1998
CO	84	lb/10^6 scf	AP-42, Table 1.4-1, 1998
PM_{10}	7.6	lb/10^6 scf	AP-42, Table 1.4-2, 1998
SOx	0.6	lb/10^6 scf	AP-42, Table 1.4-2, 1998
VOC	5.5	lb/10^6 scf	AP-42, Table 1.4-2, 1998
Lead	0.0005	lb/10^6 scf	AP-42, Table 1.4-2, 1998

NG heating value	1,028	MMBtu/10^6 scf	40 CFR 98 Table C-1
No.2 fuel oil heating value	138	MMBtu/10^3gal	40 CFR 98 Table C-1

Source ID No.		Description	Capacity (MMBtu/hr)	Throughput (10^3 gal/hr) or (10^6 scf/hr)	Hour/yr	$PM/PM_{10}/PM_{2.5}$ Emissions (lb/hr)[1]	$PM/PM_{10}/PM_{2.5}$ Emissions (ton/yr)	NOx Emissions (lb/hr)	NOx Emissions (ton/yr)	SOx Emissions (lb/hr)	SOx Emissions (ton/yr)	CO Emissions (lb/hr)	CO Emissions (ton/yr)	VOC Emissions (lb/hr)	VOC Emissions (ton/yr)	Lead Emissions (lb/hr)	Lead Emissions (ton/yr)
1	existing	Boiler No.1 (NG)	61.1	5.9436E-02	8760	0.45	1.98	5.94	26.03	3.57E-02	0.16	4.99	21.87	3.27E-01	1.43E+00	2.97E-05	1.30E-04
2	existing	Boiler No.2 (NG)	26.7	2.5973E-02	8760	0.20	0.86	2.60	11.38	1.56E-02	0.07	2.18	9.56	1.43E-01	6.26E-01	1.30E-05	5.69E-05
10	existing	Air Makeup Unit #1 (Waste Plant)	2.5	2.4319E-03	8760	0.018	0.08	0.24	1.07	1.46E-03	0.01	0.20	0.89	1.34E-02	5.86E-02	1.22E-06	5.33E-06
11	existing	Air Makeup Unit #2 (Flake Room)	2.5	2.4319E-03	8760	0.018	0.08	0.24	1.07	1.46E-03	0.01	0.20	0.89	1.34E-02	5.86E-02	1.22E-06	5.33E-06
12	existing	Air Makeup Unit #3 (Bag Room)	5	4.8638E-03	8760	0.037	0.16	0.49	2.13	2.92E-03	0.01	0.41	1.79	2.68E-02	1.17E-01	2.43E-06	1.07E-05
13	new	Air Makeup Unit #4 (Warehouse)	6.6	6.4202E-03	8760	0.05	0.21	0.64	2.81	3.85E-03	0.02	0.54	2.36	3.53E-02	1.55E-01	3.21E-06	1.41E-05
16 (old 23)	new	Real Line #1 fluidized bed dryer (natural gas-fired)	10	9.7276E-03	8760	--- [2]	--- [2]	0.97	4.26	5.84E-03	0.03	0.82	3.58	5.35E-02	2.34E-01	4.86E-06	2.13E-05
17 (old 24)	new	Real Line #2 fluidized bed dryer (natural gas-fired)	10	9.7276E-03	8760	--- [2]	--- [2]	0.97	4.26	5.84E-03	0.03	0.82	3.58	5.35E-02	2.34E-01	4.86E-06	2.13E-05
Total			124.4	**1.21E-01**													
Total from two new natural gas-fired FDBs						---	---	1.95	8.52	0.01	0.05	1.63	7.16	0.11	0.47	9.73E-06	4.26E-05

[1] Assume $PM=PM_{10} = PM_{2.5}$

[2] It has been counted under "Dryers".

Source ID number	Product transfer	Status	Throughput (T/hr)	Throughput PM < 10 um (T/hr)	Annual operating hours hr/yr	Control Efficiency	Control Efficiency	Post Baghouse Condensable PM Ratio, %	PM2.5, lb/hr controlled, using control efficiency	PM2.5, tpy controlled, using control efficiency	PM_{10} lb/hr controlled using control efficiency	PM_{10} T/yr, controlled use control efficiency
*old 14	Baghouse, Day Tank A, Real Line	new	3.75	0.01125	8760		99.9%	50%	0.00E+00	0.00E+00	0.00E+00	0.00E+00
*old 15	Baghouse, Day Tank B, Real Line	new	3.75	0.01125	8760		99.9%	50%	0.00E+00	0.00E+00	0.00E+00	0.00E+00
19 (old 26)	Baghouse Flake Tank Rejects	existing	2.43	0.00729	8760	95.00%	99.9%	50%	0.00E+00	0.00E+00	0.00E+00	0.00E+00
7	Flaker Line 1 & 2 Vaculift	existing	0.86	0.00258	8760	95.00%	99.90%	50%	5.16E-04	2.26E-03	5.16E-04	2.26E-03
8	Flaker line 3 Vaculift	existing	0.82	0.00246	8760	95.00%	99.90%	50%	4.92E-04	2.15E-03	4.92E-04	2.15E-03
9	Flaker line 4 Vaculift & Baghouse	new	0.75	0.00225	8760	95%	99.9%	50%	4.50E-04	1.97E-03	4.50E-04	1.97E-03
*old 16	Baghouse Product Transfer to Real Line #1	new	1.88	0.00564	8760		99.9%	50%	0.00E+00	0.00E+00	0.00E+00	0.00E+00
*old 17	Baghouse Product Transfer to Real Line #2	new	1.88	0.00564	8760		99.9%	50%	0.00E+00	0.00E+00	0.00E+00	0.00E+00
*old 18	Baghouse for finish product from Real Line #1	new	1.88	0.00564	8760		99.9%	50%	0.00E+00	0.00E+00	0.00E+00	0.00E+00
*old 19	Real Line A Tote Loading Station*	new	1.88	0.00564	8760		99.9%	50%	0.00E+00	0.00E+00	0.00E+00	0.00E+00
14 (old 20)	Creamy Mash Loading Station (Product Transfer Raw, Creamy Mash)	new	0.75	0.00225	8760		99.9%	50%	9.00E-03	3.94E-02	9.00E-03	3.94E-02
* old 21	Baghouse Finished Product Transfer, Creamy Mash	new	0.75	0.00225	8760		99.9%	50%	0.00E+00	0.00E+00	0.00E+00	0.00E+00
15 (old 22)	Baghouse Exhaust Dust Collector System	existing	0.00075	2.25E-06	8760		99.9%	50%	9.00E-06	3.94E-05	9.00E-06	6.75E-10
Total from the new equipment									4.50E-04	1.97E-03	4.50E-04	1.97E-03
				0.000225	90.000%	0.94905						

Notes from applicant's EI submitted on May 31, 2012: fraction of product that is PM for normal Flake

0.003

~~Creamy mash is oil coated allowing 0 PM emissions.~~

* According to applicant's 9/27/2012 email, these units are re-engineered. The air flows from the baghouses are sent back to the units and are self-contained.

PM/PM10/PM2.5 Emissions from dryers

Source ID number	Status	Sources	Production rate (T/hr, output)	PM/PM_{10} Emissions Factor (EF, lb PM/T output)	Annual operating hours	Control Efficiency	Condensable PM Ratio, %	$PM_{2.5}$ Emission lb/hr	$PM_{2.5}$ Emission lb/day	$PM_{2.5}$ Emission Ton/yr	PM_{10} Emission lb/hr	PM_{10} Emission lb/day	PM_{10} Emission Ton/yr	EF Reference and notes
3	existing	Flaker/Drum dryer type #1 (steam heated)	0.43 Max	1.4	8760	0	---	0.60	14.45	2.64	0.60	14.45	2.64	
4	existing	Flaker/Drum dryer type #2 (steam heated)	0.43 Max	1.4	8760	0	---	0.60	14.45	2.64	0.60	14.45	2.64	
5	existing	Flaker/Drum dryer type #3 (steam heated)	0.82 Max	1.4	8760	0	---	1.15	27.55	5.03	1.15	27.55	5.03	
6	new	Flaker/Drum dryer type #4 (steam heated)	0.82 Max	1.4	8760	0	---	1.15	27.55	5.03	1.15	27.55	5.03	
3-6		Four flakers combined (2.5 T/hr combined):	2.5 four flakers combined total	1.4	8760	0%	---	3.50	84.00	15.33	3.50	84.00	15.33	Emission rate based on 200% of the Average Non-spidell testing factors
20	existing	Flaker/Drum dryer type #1 (steam heated), Snifter Fan Exhaust	0.43 Max	0.5	8760	0	---	0.22	5.16	0.94	0.22	5.16	0.94	
21	existing	Flaker/Drum dryer type #2 (steam heated), Snifter Fan Exhaust	0.43 Max	0.5	8760	0	---	0.22	5.16	0.94	0.22	5.16	0.94	
22	existing	Flaker/Drum dryer type #3 (steam heated), Snifter Fan Exhaust	0.82 Max	0.5	8760	0	---	0.41	9.84	1.80	0.41	9.84	1.80	
23	new	Flaker/Drum dryer type #4 (steam heated), Snifter Fan Exhaust	0.82 Max	0.5	8760	0	---	0.41	9.84	1.80	0.41	9.84	1.80	Emission factor based on the 3/12/2004 testing of Snifter no. 2 at the Nonpareil facility. The rate includes both condensables and filterable emissions, although the source test was for filterable emissions only. Other Spidell testing results are significantly higher than those performed by other testing companies, so the emission factor used is condered to be more then adequete to account for potential emission from the snifter vents.
16 (old 23)	new	Real Line #1 fluidized bed dryer (natural gas-fired)	1.88	0.6	8760	95%	---	1.13	27.07	4.94	1.13	27.07	4.94	0.4 lb/T product is the average of the 12/1/2005 test of fluidized bed dryer 92 line 4 cyclone at Idahoan Lewisville facility by Avogadro Group and the …. Test at the the …. facility A safety factor 0f 1.5 was applied to the average emission factor to account for any variations between processes that may occur, resulting in an emission factor of 0.6 lb/ton. Spidell testing on similar units is not considered accurate and therefore will not be considered.
17 (old 24)	new	Real Line #2 fluidized bed dryer (natural gas-fired)	1.88	0.6	8760	95%	---	1.13	27.07	4.94	1.13	27.07	4.94	
18 (old 25)	new	Cream mash dryer (steam heated) with cyclone	0.75	0.44	8760	95%	50.00%	0.17	4.16	0.76	1.73E-01	4.16	7.59E-01	9/21/2011 P_{M10} and $PM_{2.5}$ test on Bubble sheet dryer (mash dryer) at Gem State from TS source test log. Gem State Dryer does not have control device. A 50% level of condensable emissions has been assumed for this dryer. The dryer is not expected to be at the same level as the dryer at the Gem State facility as the product entering the creamy mash dryer has already been dried once, at which point it is coated in oil and re-dried to end up with the creamy mash product. Also, the heat source for the creamy mash dryer is steam from the boiler and is not a direct fired unit, resulting in a lower level of condensables.
Total from new dryers								3.58	85.85	17.46	3.58	85.85	17.46	

Diesel Engine Emission Factors

NOx	3	g/bhp-hr	40 CFR 60 Subpart IIII Tier 3 Emission Standard, NMHC+NOx
CO	2.6	g/bhp-hr	40 CFR 60 Subpart IIII Tier 3 Emission Standard
PM_{10}	0.15	g/bhp-hr	40 CFR 60 Subpart Tier 3 IIII Emission Standard
SOx	0.6	lb/10^6 scf	SO2 Calculations[b]
VOC	2.51E-03	lb/bhp-h	AP-42 3.3-1
Lead	0.0005	lb/10^6 scf	AP-42, Table 1.4-2, 1998

Inputs			**SO2 Calculations**		
Engine Mechanical Power Out[a]	315	hp	Liquid Fuel (No. 2 Fuel Oil)		
Fuel Flow	104.85	lbs/hr	S % by weight	0.000015	ULSD
Fuel Flowa	15	gal/hr @ 100%	Fuel feed	104.85	lb/hr
Fuel Heat Content	137000	Btu/gal	S	0.00157275	lb/hr
Fuel Density	6.99	lb/gal	S	4.91484E-05	mol/hr
Heat Input Rate	2.055	MMBtu/hr	SO2 mol wt	64	lb/lb-mols
Testing and Maintenance Hour	100	hours	SO2 ER	0.0031455	lb/hr

Source ID No.		Description	Capacity (HP)	Throughput (gal/hr)	Hour/yr	$PM/PM_{10}/PM_{2.5}$ Emissions (lb/hr)[1]	$PM/PM_{10}/PM_{2.5}$ Emissions (ton/yr)	NOx Emissions (lb/hr)	NOx Emissions (ton/yr)	SOx Emissions (lb/hr)	SOx Emissions (ton/yr)	CO Emissions (lb/hr)	CO Emissions (ton/yr)	VOC Emissions (lb/hr)	VOC Emissions (ton/yr)
24	New	Fire Pump Engine	315	15.00	100	0.10	0.01	2.08	0.10	3.1E-03	1.6E-04	1.81	0.09	7.92E-01	3.96E-02

Notes

a. Manufacturer's specifications

b. SO2 is calculated by fuel sulfur content, not provided by vendor.

NG Emission Factors

NOx	100	lb/10^6 sc	AP-42, Table 1.4-1, 1998
CO	84	lb/10^6 sc	AP-42, Table 1.4-1, 1998
PM-10	7.6	lb/10^6 sc	AP-42, Table 1.4-2, 1998
SOx	0.6	lb/10^6 sc	AP-42, Table 1.4-2, 1998
VOC	5.5	lb/10^6 sc	AP-42, Table 1.4-2, 1998
Lead	0.0005	lb/10^6 sc	AP-42, Table 1.4-2, 1998

Source ID No.	Description	Capacity (MMBtu/hr)	Throughput (10^3 gal/hr) or (10^6 scf/hr)	Hour/yr	$PM_{2.5}$ Emissions (lb/hr)[1]	$PM_{2.5}$ Emissions (ton/yr)	PM/PM_{10} Emissions (lb/hr)[1]	PM/PM_{10} Emissions (ton/yr)	NOx Emissions (lb/hr)	NOx Emissions (ton/yr)	SOx Emissions (lb/hr)	SOx Emissions (ton/yr)	CO Emissions (lb/hr)	CO Emissions (ton/yr)	VOC Emissions (lb/hr)	VOC Emissions (ton/yr)	Lead Emissions (lb/hr)	Lead Emissions (ton/yr)
1	Boiler No.1 (NG)	61.1	5.9436E-02	8760	4.52E-01	1.98	4.52E-01	1.98	5.94	26.03	3.57E-02	0.16	4.99	21.87	0.33	1.43	3.0E-05	1.30E-04
1	Boiler No.1 (No.2 fuel oil)[2]	61.1	4.4275E-01		4.98	21.76	5.10	22.30	13.50	52.90	31.9	93.90	10.3	45.30	0.30	1.50	ND	ND
Boiler No.1 emissions decrease by removing No.2 fuel oil					4.53	19.79	4.65	20.32	7.56	26.87	31.86	93.74	5.31	23.43	-0.03	0.07	ND	ND

[1]PM2.5/PM10 ratio of 97.6% applied based on CARB data

[2] Taken from SOB for the 2008 PTC except for lead

ATTACHMENT B: FIRE PUMP MANUFACTURER DATA

SUBMITTAL DATA
DEEPWELL DIESEL PUMP
1500 GPM @ 125 PSI BOOST
3-D FIRE PROTECTION
IDAHOAN FIRE WELLS PROJECT

AURORA FIRE PUMPS

SELECTION TABLES
60 HERTZ ELECTRIC/DIESEL
VERTICAL TURBINE

1500 GPM, 13FGH

TOTAL HEAD (FT. H20)	NUMBER OF STAGES	MAX. BHP REQUIRED	REQUIRED HP RATING UL LISTED & FM APPROVED 1770 RPM	APPROXIMATE SHIPPING WEIGHT PUMP ONLY (LBS.)	APPROXIMATE SHIPPING WEIGHT PER 5' SECTION COLUMN (LBS.)	BOWL SIZE (INCH)
226–240	4	124	125	1805	270	13FGH
241–250	4	131	125	1805	270	13FGH
251–260	4	137	125	1805	270	13FGH
261–270	4	143	125	1805	270	13FGH
271–280	4	150	150	1805	270	13FGH
281–290	4	156	150	1805	270	13FGH
291–300	4	163	150	1805	270	13FGH
	5	155	150	1960	270	13FGH
301–313	4	172	150	1805	270	13FGH
	5	164	150	1960	270	13FGH
314–328	5	172	150	1960	270	13FGH
329–340	5	180	200	1960	270	13FGH
341–350	5	187	200	1960	270	13FGH
351–360	5	193	200	1960	270	13FGH
361–370	5	200	200	1960	270	13FGH
	6	193	200	2110	270	13FGH
371–380	5	207	200	1960	270	13FGH
	6	199	200	2110	270	13FGH
381–390	5	215	200	1960	270	13FGH
	6	205	200	2110	270	13FGH
391–400	6	211	200	2110	270	13FGH
401–410	6	217	200	2110	270	13FGH
411–420	6	223	200	2110	270	13FGH
	7	216	200	2270	270	13FGH
421–430	6	230	200	2110	270	13FGH
	7	223	200	2270	270	13FGH
431–440	6	237	250	2110	270	13FGH
	7	230	200	2270	270	13FGH
441–450	6	244	250	2110	270	13FGH
	7	236	250	2270	270	13FGH
451–460	6	251	250	2110	270	13FGH
	7	243	250	2270	270	13FGH
461–470	6	258	250	2110	270	13FGH
	7	249	250	2270	270	13FGH
471–480	7	255	250	2270	270	13FGH
481–490	7	261	250	2270	270	13FGH
	8	253	250	2430	270	13FGH
491–500	7	268	250	2270	270	13FGH
	8	260	250	2430	270	13FGH
501–510	7	274	250	2270	270	13FGH
	8	266	250	2430	270	13FGH
511–520	7	281	250	2270	270	13FGH
	8	272	250	2430	270	13FGH
521–530	7	287	250	2270	270	13FGH
	8	279	250	2430	270	13FGH
531–544	7	297	300	2270	270	13FGH
	8	287	250	2430	270	13FGH
	9	281	250	2590	270	13FGH
545–555	8	293	300	2430	270	13FGH
	9	287	250	2590	270	13FGH
556–564	8	300	300	2430	270	13FGH
	9	294	300	2590	270	13FGH

© 2011 Pentair Pump Group, Inc.

AURORA FIRE PUMPS

DIESEL DRIVEN VERTICAL TURBINE

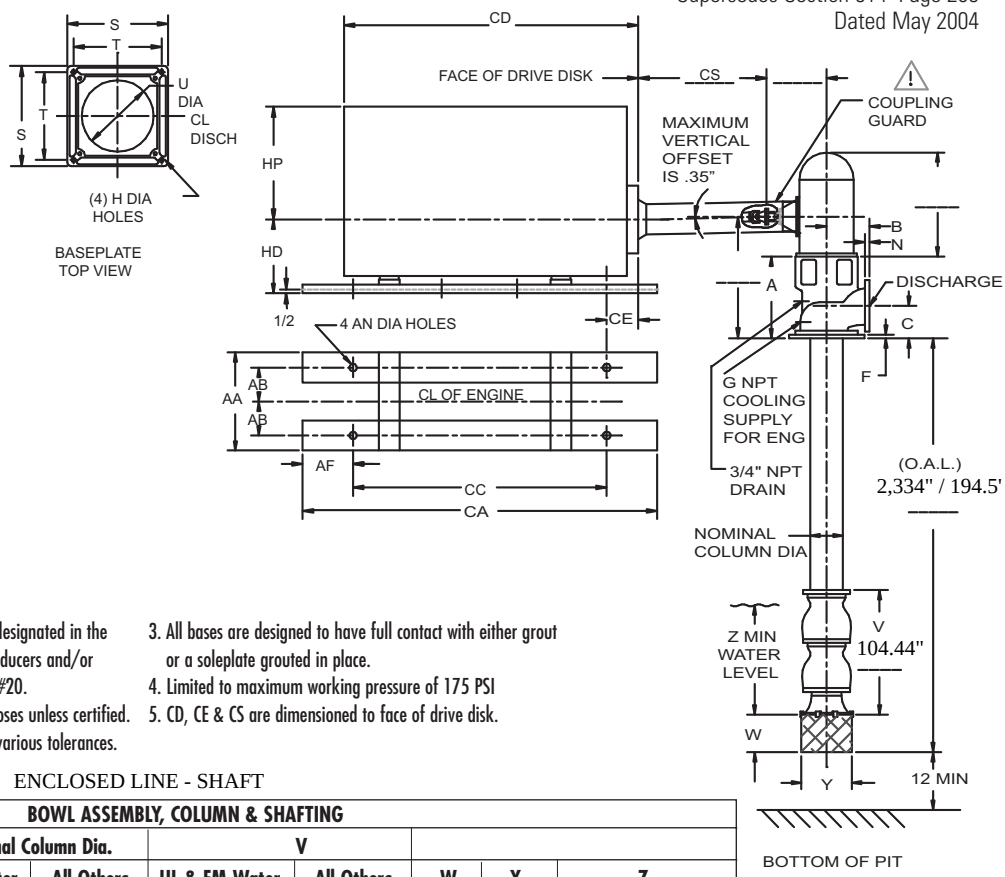

GEAR		
Mfg.	Ratio	Model
Randolph	1:1	G250

NOTES

1. Flange ratings are either 125# or 250# and will be designated in the certification block below for each order submittal. Reducers and/or increasers may be required to meet NFPA Pamphlet #20.
2. Not for construction, installation, or application purposes unless certified. Dimensions shown are typical and may vary due to various tolerances.
3. All bases are designed to have full contact with either grout or a soleplate grouted in place.
4. Limited to maximum working pressure of 175 PSI
5. CD, CE & CS are dimensioned to face of drive disk.

ENCLOSED LINE - SHAFT

BOWL ASSEMBLY, COLUMN & SHAFTING								
		Nominal Column Dia.		V				
Size & Model	# of Stages	UL & FM Water Lube Only	All Others	UL & FM Water Lube Only	All Others	W	Y	Z
13 FGH	~~4~~	8	10	61-13/16	65-1/4	11	13	34
	7 Total Stages			Add 13-1/16 for each additional stage over 4 stages				
15 FGH	3	10	12	54-1/16	57-7/16	13	14-3/4	34 - 2000 GPM 46 - 2500 GPM
	Total Stages			Add 14-1/2 for each additional stage over 3 stages				

DISCHARGE HEADS & BASEPLATES												
Size												
BD	DISCH	A	B	C	F	G	H	N	S	T	U	
16-1/2	8 SDC	23	11-3/8	10	1-1/2	1	7/8	1-3/16	24	21	17-1/8	(4)
16-1/2	8 LAD	23	11-3/8	10	1-1/2	1	7/8	1-3/16	24	21	17-1/8	
20	10 LAD	23	13-7/8	10-1/2	1-1/2	1	7/8	1-1/4	24	21	17-1/8	

8" Disch.

CLARKE JU6H DIESEL ENGINES YOUR ENGINE MODEL JU6H-UFAD98												
MODEL	AA	AB	AF	AN	CA	CB	CC	CD	CE	CS	HD	HP
JU6HUF30	32	15	5	1 x 2	46	N/A	36	45.9	.88	15.2	20.35	45.8
JU6HUF50	32	15	5	1 x 2	46	N/A	36	45.9	.88	15.2	20.35	45.8
JU6HUF60	32	15	5	1 x 2	46	N/A	36	48	.88	15.2	20.35	45.8

Customer: 3-D FIRE PROTECTION / NICKERSON COMPANY, INC.		P.O.#:		Dwg.#
Job Name: IDAHOAN FIRE WELLS		☒ UL ☒ FM ☐ CUL		Flange Rating: ☐ 125# ☒ 250#
Model: 13FGH	# Stages: 7	GPM: 1,500	PSI: 125 PSI	Max. Lift: 180 FT
Engine Mfg.: CLARKE	Engine Model: JU6H-UFAD98	RPM: 1,760	HP: 315	
Certified By:		Date:		

© 2011 Pentair Pump Group, Inc.

AURORA® Pentair Water

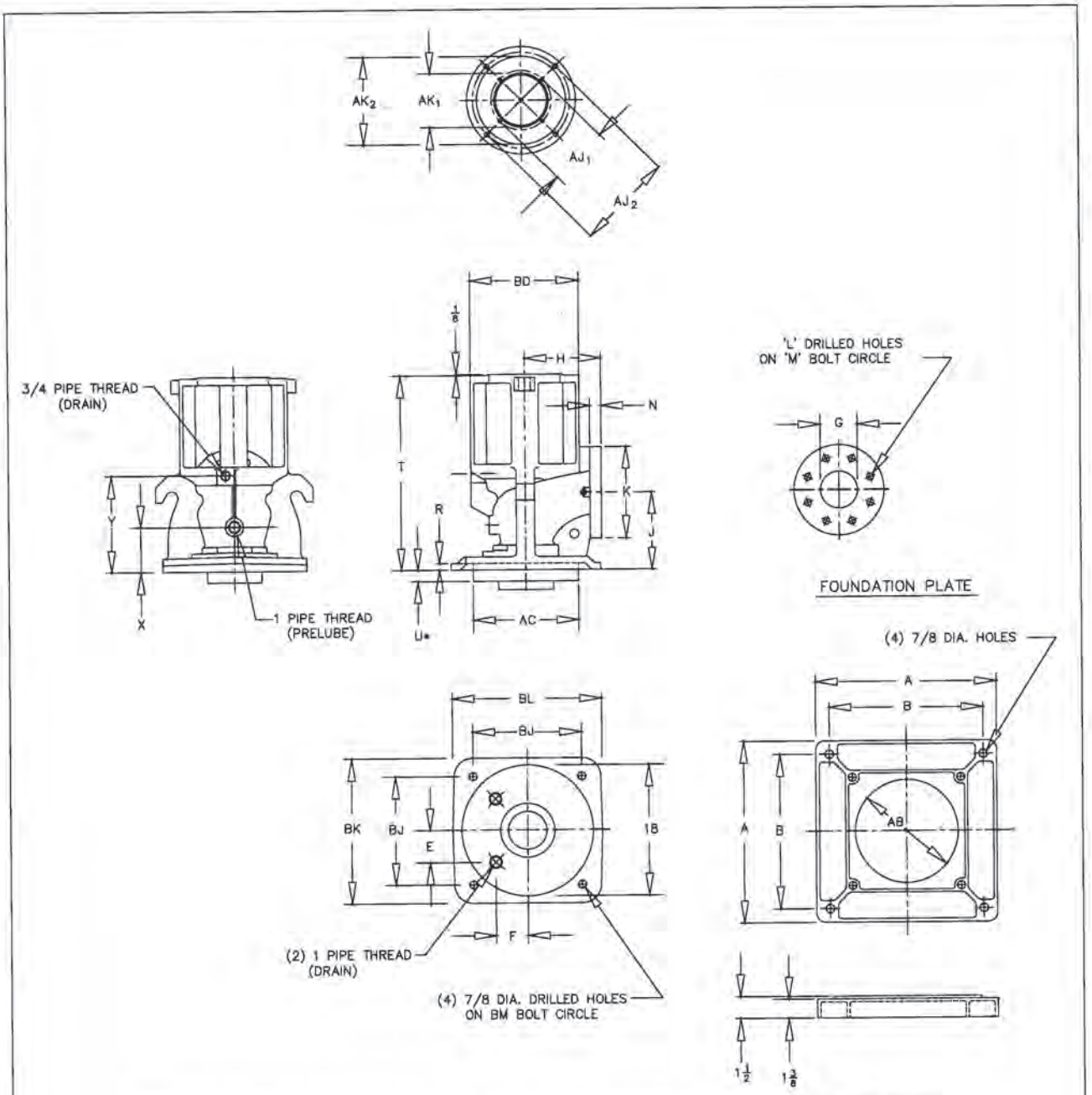

SIZE	FLANGE SIZE	A	B	E	F	G	H	J	K	L	M	N	R	T	U	X	Y	AB	AC	AJ_1	AK_1
16 1/2 X 6	6	24	21	3 3/8	5 3/4	6 1/8	10 1/4	8 1/2	11 1/8	(8) 7/8	9 1/2	1 1/8	7/8	21 1/2	1 1/4*	5	11 1/8	17 1/8	14 3/4	9 1/8	8 1/4
16 1/2 X 8	8	24	21	3 3/8	5 3/4	8 1/8	11 3/8	8 5/8	13 5/8	(8) 7/8	11 3/4	1 1/4	7/8	21 1/2	1 1/4*	5	11 1/8	17 1/8	14 3/4	9 1/8	8 1/4
20 X 10	10	24	21	3 3/8	5 3/4	10 1/8	13 7/8	9	16 1/8	(12) 1	14 1/4	1 1/4	7/8	21 1/2	1 1/4*	4 3/8	11 1/8	17 1/8	14 3/4	NA	8 1/4

SIZE	AJ_2	AK_2	BD	BJ	BK	BL	BM
16 1/2 X 6	14 3/4	13 1/2	16 1/2	16 3/4	20	20 1/2	23 3/4
16 1/2 X 8	14 3/4	13 1/2	16 1/2	16 3/4	20	20 1/2	23 3/4
20 X 10	14 3/4	13 1/2	20	16 3/4	20	20 1/2	23 3/4

OPTIONAL 250 LB. FLANGES	FLANGE SIZE	K	L	M	N
	6	12 5/8	(12) 7/8	10 5/8	3/4
	8	15 1/8	(12) 1**	13	1 3/4
	10	17 5/8	(16) 1/8	15 1/4	2

*U=3" WITH 10" COLUMN AND 9 3/4" WITH 12" COLUMN
** BOTTOM 2 HOLES ARE TAPPED 7/8 – 9 UNC THROUGH

Layne/Verti-Line
Pentair Water

TYPE "LAD" SURFACE HEAD

DWG. NO. 1100DM002 | REV

CLARKE®

FIRE PUMP ENGINES

MODELS

JU6H-UFADM8 JU6H-UFADMG JU6H-UFAD58 JU6H-UFADNG JU6H-UFADN0 JU6H-UFADP0 JU6H-UFADP8 JU6H-UFADQ0 JU6H-UFAD88 JU6H-UFADR0 JU6H-UFADR8 JU6H-UFADS8 JU6H-UFADS0 JU6H-UFADT0 JU6H-UFADW8 JU6H-UFADX8 JU6H-UFAD98

FM-UL-cUL APPROVED RATINGS BHP/*KW*

JU6H MODEL ♦	RATED SPEED 1760		2100		2350		2400		US-EPA (NSPS) Available Until ●
UFADM8	175	*131*							*No Expiration*
UFADMG			175	*131*	175	*131*			*No Expiration*
UFAD58	183	*137*							*No Expiration*
UFADNG	190	*142*	181	*135*	183	*137*	183	*137*	*No Expiration*
UFADN0	197	*147*	197	*147*	200	*149*	200	*149*	*No Expiration*
UFADP0	220	*164*	209	*156*	211	*157*	211	*157*	*No Expiration*
UFADP8	220	*164*							*No Expiration*
UFADQ0			224	*167*	226	*169*	226	*169*	*No Expiration*
UFAD88	237	*177*							*No Expiration*
UFADR0			238	*177.5*	240	*179*	240	*179*	*No Expiration*
UFADR8	250	*187*							*No Expiration*
UFADS8	260	*194*							*No Expiration*
UFADS0			260	*194*	268	*200*	268	*200*	*No Expiration*
UFADT0	229	*171*	274	*204*	275	*205*	275	*205*	*No Expiration*
UFADW8	282	*211*							*No Expiration*
UFADX8	305	*227.5*							*No Expiration*
UFAD98	315	*235*							*No Expiration*

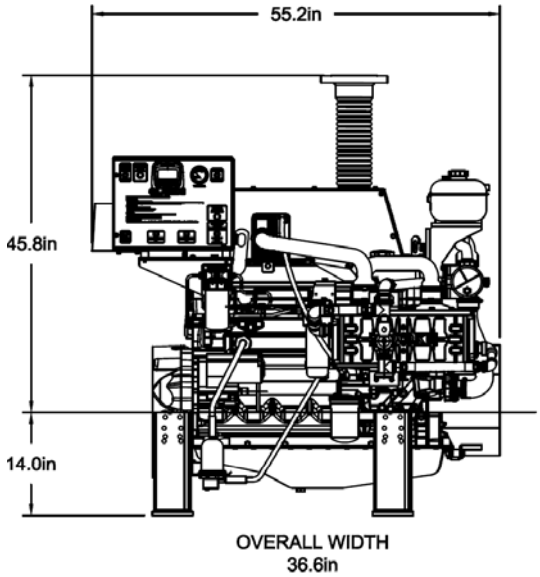

● USA EPA (NSPS) Tier 3 Emissions Certified Off-Road (40 CFR Part 89) and NSPS Stationary (40 CFR Part 60 Sub Part IIII). Meet EU Stage IIIA emission levels.

♦ All Models available for Export

SPECIFICATIONS

ITEM	JU6H MODELS M8	MG	58	NG	N0	P8	88	P0	Q0	R0	S0	T0	R8	S8	W8	X8	98
Number of Cylinders	6																
Aspiration	TRWA																
Rotation*	CW																
Weight – lb (kg)	1747 (791)																
Compression Ratio	19.0:1							17.0:1									
Displacement – cu. in. (L)	415 (6.8)																
Engine Type	4 Stroke Cycle – Inline Construction																
Bore & Stroke – in. (mm)	4.19 x 5.00 (106 x 127)																
Installation Drawing	D628																
Wiring Diagram AC	C07591																
Wiring Diagram DC	C071367, C071360, C071361							C071368, C071360, C071761									
Engine Series	John Deere 6068 Series Power Tech E							John Deere 6068 Series Power Tech Plus									
Speed Interpolation	N/A																

Abbreviations: CW – Clockwise TRWA – Turbocharged with Raw Water Aftercooling N/A - Not Available

*Rotation viewed from Heat Exchanger / Front of engine

CERTIFIED POWER RATING

- Each engine is factory tested to verify power and performance.
- FM-UL power ratings are shown at specific speeds, Clarke engines can be applied at a single rated RPM setting ± 50 RPM.

ENGINE RATINGS BASELINES

- Engines are to be used for stationary emergency standby fire pump service only. Engines are to be tested in accordance with NFPA 25.
- Engines are rated at standard SAE conditions of 29.61 in. (752.1 mm) Hg barometer and 77°F (25°C) inlet air temperature [approximates 300 ft. (91.4 m) above sea level] by the testing laboratory (see SAE Standard J 1349).
- A deduction of 3 percent from engine horsepower rating at standard SAE conditions shall be made for diesel engines for each 1000 ft. (305 m) altitude above 300 ft. (91.4 m)
- A deduction of 1 percent from engine horsepower rating as corrected to standard SAE conditions shall be made for diesel engines for every 10°F (5.6°C) above 77°F (25°C) ambient temperature.

c UL us

Meets NFPA 20 Requirements

FM APPROVED

MODELS

JU6H-UFADM8
JU6H-UFADMG
JU6H-UFADK0
JU6H-UFAD58
JU6H-UFADNG
JU6H-UFADN0
JU6H-UFADP0
JU6H-UFADP8
JU6H-UFADQ0
JU6H-UFAD88
JU6H-UFADR0
JU6H-UFADR8
JU6H-UFADS8
JU6H-UFADS0
JU6H-UFADT0
JU6H-UFADW8
JU6H-UFADX8
JU6H-UFAD98

ENGINE EQUIPMENT

EQUIPMENT	STANDARD	OPTIONAL
Air Cleaner	Direct Mounted, Washable, Indoor Service with Drip Shield	Disposable, Drip Proof, Indoor Service Outdoor Type, Single or Two Stage
Alternator	12V-DC, 42 Amps with Poly-Vee Belt and Guard	24V-DC, 40 Amps with Poly-Vee Belt and Guard
Exhaust Protection	Metal Guards on Manifolds and Turbocharger	
Coupling	Bare Flywheel	UL Listed Driveshaft and Guard, JU6H-UFAD58/NG/ADMG/ADM8/K0/N0/Q0/R0-CDS30-S1; JU6H-UFADP8/P0/T0/88/R8/S8/S0/W8/X8/98- CDS50-SC at 1760/2100 RPM only
Electronic Control Module	12V-DC, Energized to Stop, Primary ECM always Powered on	24V-DC, Energized to Stop, Primary ECM always Powered on
Exhaust Flex Connection*	Stainless Steel Flex, 150# ANSI Flanged Connection, 5" for JU6H-UFAD58/M8/MG/K0/NG/N0/P8/88; Stainless Steel Flex, 150# ANSI Flanged Connection, 6" for JU6H-UFADP0/Q0/R0/S0/T0/R8/S8/W8/X8/98	Stainless Steel Flex, 150# ANSI Flanged Connection, 6" for JU6H-UFAD58/M8/MG/K0/NG/N0/P8/88; Stainless Steel Flex, 150# ANSI Flanged Connection, 8" for JU6H-UFADP0/Q0/R0/S0/T0/R8/S8/W8/X8/98
Flywheel Housing	SAE #3	
Flywheel Power Take Off	11.5" SAE Industrial Flywheel Connection	
Fuel Connections	Fire Resistant, Flexible, USA Coast Guard Approved, Supply and Return Lines	Stainless Steel, Braided, cUL Listed, Supply and Return Lines
Fuel Filter	Primary Filter with Priming Pump	
Fuel Injection System	High Pressure Common Rail	
Engine Heater	115V-AC, 1360 Watt	230V-AC, 1360 Watt
Governor, Speed	Dual Electronic Control Modules	
Heat Exchanger	Tube and Shell Type, 60 PSI (4 BAR), NPT(F) Connections – Sea/Salt Water Compatible	
Instrument Panel	Multimeter to Display English and Metric, Tachometer, Hourmeter, Water Temperature, Oil Pressure and One (1) Voltmeter with Toggle Switch, Front Opening	
Junction Box	Integral with Instrument Panel; For DC Wiring Interconnection to Engine Controller	
Lube Oil Cooler	Engine Water Cooled, Plate Type	
Lube Oil Filter	Full Flow with By-Pass Valve	
Lube Oil Pump	Gear Driven, Gear Type	
Manual Start Control	On Instrument Panel with Control Position Warning Light	
Overspeed Control	Electronic, Factory Set, Not Field Adjustable	
Raw Water Solenoid Operation	Automatic from Fire Pump Controller and from Engine Instrument Panel	
Run – Stop Control	On Instrument Panel with Control Position Warning Light	
Starters	Two (2) 12V-DC	Two (2) 24V-DC
Throttle Control	Adjustable Speed Control by Increase/Decrease Button, Tamper Proof in Instrument Panel	
Water Pump	Centrifugal Type, Poly-Vee Belt Drive with Guard	

Abbreviations : DC – Direct Current, AC – Alternating Current, SAE – Society of Automotive Engineers, NPT(F) – National Pipe Tapered Thread (Female), ANSI – American National Standards Institute

*JU6H-UFADP8/P0/Q0/R0/S0/T0/R8/S8/W8/X8/98 – All provided with orifice plate mounted in flex exhaust.

Note: Engine Controller needs 2 additional signals: Injector Failure, Alternate ECM Selected

MODEL NOMENCLATURE: (10 Digit Models)

JU6H - UFADR0

- John Deere Base Engine
- 350 Series
- 6 Cylinders
- Heat Exchanger Cooled
- UL Listed
- FM Approved
- Built in USA
- EPA Tier 3 Certified
- Power Curve Number

CLARKE®

CLARKE Fire Protection Products, Inc.
3133 E. Kemper Rd., Cincinnati, Ohio 45241
United States of America
Tel +1-513-475-FIRE(3473) Fax +1-513-771-0726
www.clarkefire.com

CLARKE UK, Ltd.
Grange Works, Lomond Rd., Coatbridge, ML5-2NN
United Kingdom
Tel +44-1236-429946 Fax +44-1236-427274
www.clarkefire.com

C133421 revM
08MAY12

Specifications and information contained in this brochure subject to change without notice.

CLARKE
Fire Protection Products, Inc.

JU6H-UFAD98
INSTALLATION & OPERATION DATA (I&O Data)
USA Produced

Basic Engine Description

Engine Manufacturer	John Deere Co.
Ignition Type	Compression (Diesel)
Number of Cylinders	6
Bore and Stroke - in (mm)	4.19 (106) X 5 (127)
Displacement - in³ (L)	415 (6.8)
Compression Ratio	17.0:1
Valves per cylinder	
Intake	2
Exhaust	2
Combustion System	Direct Injection
Engine Type	In-Line, 4 Stroke Cycle
Fuel Management Control	Electronic, High Pressure Common Rail
Firing Order (CW Rotation)	1-5-3-6-2-4
Aspiration	Turbocharged
Charge Air Cooling Type	Raw Water
Rotation, viewed from front of engine, Clockwise (CW)	Standard
Engine Crankcase Vent System	Open
Installation Drawing	D628
Weight - lb (kg)	1747 (792)

Power Rating	**1760**
Nameplate Power - HP (kW)	315 (235)

Cooling System - [C051386]	**1760**
Engine Coolant Heat - Btu/sec (kW)	101.5 (107)
Engine Radiated Heat - Btu/sec (kW)	71 (74.9)
Heat Exchanger Minimum Flow	
60°F (15°C) Raw H_20 - gal/min (L/min)	32 (121)
95°F (35°C) Raw H_20 - gal/min (L/min)	43 (163)
Heat Exchanger Maximum Cooling Raw Water	
Inlet Pressure - psi (bar)	60 (4.1)
Flow - gal/min (L/min)	40 (151)
Typical Engine H_20 Operating Temp - °F (°C)[1]	180 (82.2) - 195 (90.6)
Thermostat	
Start to Open - °F (°C)	180 (82.2)
Fully Opened - °F (°C)	203 (95)
Engine Coolant Capacity - qt (L)	22.2 (21)
Coolant Pressure Cap - lb/in² (kPa)	15 (103)
Maximum Engine Coolant Temperature - °F (°C)	230 (110)
Minimum Engine Coolant Temperature - °F (°C)	160 (71.1)
High Coolant Temp Alarm Switch - °F (°C)[2]	235 (113) - 241 (116)

Electric System - DC	**Standard**		**Optional**	
System Voltage (Nominal)	12		24	
Battery Capacity for Ambients Above 32°F (0°C)				
Voltage (Nominal)	12	[C07633]	24	[C07633]
Qty. Per Battery Bank	1		2	
SAE size per J537	8D		8D	
CCA @ 0°F (-18°C)	1400		1400	
Reserve Capacity - Minutes	430		430	
Battery Cable Circuit, Max Resistance - ohm	0.0012		0.0012	
Battery Cable Minimum Size				
0-120 in. Circuit Length[3]	00		00	
121-160 in. Circuit Length[3]	000		000	
161-200 in. Circuit Length[3]	0000		0000	
Charging Alternator Maximum Output - Amp,	40	[C071363]	55	[C071365]
Starter Cranking Amps, Rolling - @60°F (15°C)	440	[RE69704/RE70404]	250	[C07819/C07820]

NOTE: This engine is intended for indoor installation or in a weatherproof enclosure. [1]Engine H_2O temperature is dependent on raw water temperature and flow. [2]High Coolant Switch threshold varies with engine load. [3]Positive and Negative Cables Combined Length.

CLARKE
Fire Protection Products, Inc.

JU6H-UFAD98
INSTALLATION & OPERATION DATA (I&O Data)
USA Produced

Exhaust System	**1760**
Exhaust Flow - ft.³/min (m³/min)	1400 (39.6)
Exhaust Temperature - °F (°C)	961 (516)
Maximum Allowable Back Pressure - in H_20 (kPa)	30 (7.5)
Minimum Exhaust Pipe Dia. - in (mm)[4]	6 (152)

Fuel System	**1760**
Fuel Consumption - gal/hr (L/hr)	15 (56.8)
Fuel Return - gal/hr (L/hr)	21.3 (80.6)
Fuel Supply - gal/hr (L/hr)	36.3 (137)
Fuel Pressure - lb/in² (kPa)	3 (20.7) - 6 (41.4)
Minimum Line Size - Supply - in.	.50 Schedule 40 Steel Pipe
Pipe Outer Diameter - in (mm)	0.848 (21.5)
Minimum Line Size - Return - in.	.375 Schedule 40 Steel Pipe
Pipe Outer Diameter - in (mm)	0.675 (17.1)
Maximum Allowable Fuel Pump Suction Lift with clean Filter - in H_20 (mH_20)	80 (2)
Maximum Allowable Fuel Head above Fuel pump, Supply or Return - ft (m)	6.6 (2)
Fuel Filter Micron Size	2 (Secondary)

Heater System	**Standard**	**Optional**
Engine Coolant Heater		
Wattage (Nominal)	1360	1360
Voltage - AC, 1 Phase	115 (+5% -10%)	230 (+5%, -10%)
Part Number	[C123640]	[C123644]

Air System	**1760**	
Combustion Air Flow - ft.³/min (m³/min)	547 (15.5)	
Air Cleaner	**Standard**	**Optional**
Part Number	[C03244]	[C03327]
Type	Indoor Service Only, with Shield	Canister, Single-Stage
Cleaning method	Washable	Disposable
Air Intake Restriction Maximum Limit		
Dirty Air Cleaner - in H_20 (kPa)	14 (3.5)	10 (2.5)
Clean Air Cleaner - in H_20 (kPa)	7 (1.7)	5 (1.2)
Maximum Allowable Temperature (Air To Engine Inlet) - °F (°C)[5]	130 (54.4)	

Lubrication System	
Oil Pressure - normal - lb/in² (kPa)	40 (276) - 60 (414)
Low Oil Pressure Alarm Switch - lb/in² (kPa)[6]	30 (207) to 35 (241)
In Pan Oil Temperature - °F (°C)	220 (104) - 245 (118)
Total Oil Capacity with Filter - qt (L)	34.3 (32.5)

Lube Oil Heater	**Optional**	**Optional**
Wattage (Nominal)	150	150
Voltage	120V (+5%, -10%)	240V (+5%, -10%)
Part Number	C04430	C04431

Performance	**1760**
BMEP - lb/in² (kPa)	342 (2360)
Piston Speed - ft/min (m/min)	1467 (447)
Mechanical Noise - dB(A) @ 1m	C133381
Power Curve	C132618

[4]Based on Nominal System. Back pressure flow analysis must be done to assure maximum allowable back pressure is not exceeded. (Note: minimum exhaust Pipe diameter is based on: 15 feet of pipe, one 90° elbow, and a silencer pressure drop no greater than one half of the maximum allowable back pressure.) [5]Review for horsepower derate if ambient air entering engine exceeds 77°F (25°C). [6]Low Oil Pressure Switch threshold varies w/engine speed. [ ] indicates component reference part number.

JU4H & JU6H ENGINE MODELS
ENGINE MATERIALS AND CONSTRUCTION

Air Cleaner
Type……..……. ..Indoor Usage Only
Oiled Fabric Pleats
Material…….……. Surgical Cotton
Aluminum Mesh

Air Cleaner - Optional
Type……Canister
Material……Pleated Paper
Housing……..……Enclosed

Camshaft
Material……Cast Iron
Chill Hardened
Location……..……In Block
Drive……..Gear, Spur
Type of Cam……..…... Ground

Charge Air Cooler (JU6H-60,62,68,74,84, ADK0, AD58, ADNG, ADN0, ADQ0, ADR0, AAQ8, AARG, ADP8, ADP0, ADT0, AD88, ADR8, AD98, ADS0, ADW8, ADX8, AD98 only)
Type……Raw Water Cooled

Materials (in contact with raw water)
Tubes…… …… 90/10 CU/NI
Headers …… 36500 Muntz
Covers …… 83600 Red Brass
Plumbing …… 316 Stainless Steel/ Brass
90/10 Silicone

Coolant Pump
Type……Centrifugal
Drive…… …… Poly Vee Belt

Coolant Thermostat
Type……Non Blocking
Qty……1

Connecting Rod
Type……I-Beam Taper
Material……Forged Steel Alloy

Crank Pin Bearings
Type……Precision Half Shell
Number……1 Pair Per Cylinder
Material……Wear-Guard

Crankshaft
Material……Forged Steel
Type of Balance……Dynamic

Cylinder Block
Type……One Piece with
Non-Siamese Cylinders
Material……Annealed Gray Iron

Cylinder Head
Type…….. …… Slab 2 Valve
Material…… Annealed Gray Iron

Cylinder Liners
Type…….. …… Centrifugal Cast, Wet Liner
Material…….…… Alloy Iron Plateau, Honed

Valves
Type…….. ……Poppet
Arrangement…… …..Overhead Valve
Number/Cylinder……1 intake
1 exhaust
Operating Mechanism…..Mechanical Rocker Arm
Type of Lifter……..Large Head
Valve Seat Insert……Replaceable

Fuel Pump
Type……Diaphragm
Drive…… Cam Lobe

Heat Exchanger (USA)
Type……Tube & Shell
Materials
Tube& Headers…… Copper
Shell……Copper
Electrode……Zinc

Heat Exchanger (UK)
Type……Tube & Bundle
Materials
Tube& Headers…… Copper
Shell…… Aluminum

Injection Pump
Type……Rotary
Drive…… Gear

Lubrication Cooler
Type……Plate

Lubrication Pump
Type……Gear
Drive…… Gear

Main Bearings
Type……Precision Half Shells
Material……Steel Backed-Aluminum Lined

Piston
Type and Material…… Aluminum Alloy with Reinforced
Top Ring Groove
Cooling…… Oil Jet Spray

Piston Pin
Type……Full Floating - Offset

Piston Rings
Number/Piston……3
Top…… Keystone Barrel Faced -
Plasma Coated
Second…… Tapered Cast Iron
Third……Double Rail Type
w/Expander Spring

CLARKE

www.clarkefire.com **Fire Protection Products**

JU6H-UFAD98

FIRE PUMP DRIVER

NOISE DATA

Mechanical Engine Noise *

RPM	BHP	OVERALL dB(A)	Octave Band 31.5 Hz dB(A)	63 Hz dB(A)	125 Hz dB(A)	250 Hz dB(A)	500 Hz dB(A)	1k Hz dB(A)	2k Hz dB(A)	4k Hz dB(A)	8k Hz dB(A)	16k Hz dB(A)
1760	315	109.2	67.0	69.2	82.6	89.2	97.1	99.7	104.9	103.4	101.7	101.7

Raw Exhaust Engine Noise **

RPM	BHP	OVERALL dB(A)	Octave Band 31.5 Hz dB(A)	63 Hz dB(A)	125 Hz dB(A)	250 Hz dB(A)	500 Hz dB(A)	1k Hz dB(A)	2k Hz dB(A)	4k Hz dB(A)	8k Hz dB(A)	16k Hz dB(A)
1760	315	112.1		101.8	106.2	100.9	103.1	102.7	109.4	103.6	92.3	85.8

** Values above are provided at 3.3ft (1m) from engine block and do **not** include the raw exhaust noise.*

*** Values above are provided at 23ft (7m), 90° horizontal, from a vertically directed engine exhaust outlet with a 24" straight pipe attachment and does not include mechanical engine noise.*

The above data reflects values for a typical engine of this model, speed and power in a free-field environment.

Installation specifics such as background noise level and amplification of noise levels from reflecting off of surrounding objects, will affect the overall noise levels observed. As a result of this, Clarke makes no guarantees to the above levels in an actual installation.

Rating Specific Emissions Data - John Deere Power Systems

JOHN DEERE

Nameplate Rating Information	
Clarke Model	JU6H-UFAD98
Power Rating (BHP / kW)	315 / 235
Certified Speed (RPM)	1760

Rating Data		
Rating	6068HFC48A	
Certified Power (kW)	235	
Rated Speed	1760	
Vehicle Model Number	Clarke Fire Pump	
Units	g/kW-hr	g/hp-hr
NOx	3.6	2.7
HC	0.1	0.1
NOx + HC	3.7	2.8
Pm	0.07	0.06
CO	0.6	0.4

Certificate Data	
Engine Model Year	2012
EPA Family Name	CJDXL13.5103
EPA JD Name	650HAA
EPA Certificate Number	CJDXL13.5103-020
CARB Executive Order	Not Applicable
Parent of Family	6135HF485A
Units	g/kW-hr
NOx	3.3
HC	0.1
NOx + HC	3.4
Pm	0.10
CO	0.6

* The emission data listed is measured from a laboratory test engine according to the test procedures of 40 CFR 89 or 40 CFR 1039, as applicable. The test engine is intended to represent nominal production hardware, and we do not guarantee that every production engine will have identical test results. The family parent data represents multiple ratings and this data may have been collected at a different engine speed and load. Emission results may vary due to engine manufacturing tolerances, engine operating conditions, fuels used, or other conditions beyond our control.

This information is property of Deere & Company. It is provided solely for the purpose of obtaining certification or permits of Deere powered equipment. Unauthorized distribution of this information is prohibited

ATTACHMENT C: FORM FRA – FIRE PUMP ENGINE

DEQ AIR QUALITY PROGRAM
1410 N. Hilton, Boise, ID 83706
For assistance, call the
Air Permit Hotline – 1-877-5PERMIT

AIR PERMIT APPLICATION

Revision 6
10/7/09

For each box in the table below, CTRL+click on the blue underlined text for instructions and information.

IDENTIFICATION	
1. Company Name:	2. Facility Name:
Idahoan Foods, LLC	Idaho Falls Facility
3. Brief Project Description:	Replacing three proctors with two fluid bed dryers and adding a drum dryer

APPLICABILITY DETERMINATION	
4. List applicable subparts of the New Source Performance Standards (NSPS) (40 CFR part 60). Examples of NSPS affected emissions units include internal combustion engines, boilers, turbines, etc. The applicant must thoroughly review the list of affected emissions units.	List of applicable subpart(s): 40 CFR Part 60 Subpart IIII ☐ Not Applicable
5. List applicable subpart(s) of the National Emission Standards for Hazardous Air Pollutants (NESHAP) found in 40 CFR part 61 and 40 CFR part 63. Examples of affected emission units include solvent cleaning operations, industrial cooling towers, paint stripping and miscellaneous surface coating. EPA has a web page dedicated to NESHAP that should be useful to applicants.	List of applicable subpart(s): 40 CFR Part 63 Subpart ZZZZ ☐ Not Applicable
6. For each subpart identified above, conduct a complete a regulatory analysis using the instructions and referencing the example provided on the following pages. **Note** - Regulatory reviews must be submitted with sufficient detail so that DEQ can verify applicability and document in legal terms why the regulation applies. Regulatory reviews that are submitted with insufficient detail will be determined incomplete.	☑ A detailed regulatory review is provided (Follow instructions and example). ☐ DEQ has already been provided a detailed regulatory review. Give a reference to the document including the date.

IF YOU ARE UNSURE HOW TO ANSWER ANY OF THESE QUESTIONS, CALL THE AIR PERMIT HOTLINE AT 1-877-5PERMIT

It is emphasized that it is the applicant's responsibility to satisfy all technical and regulatory requirements, and that DEQ will help the applicant understand what those requirements are prior to the application being submitted but that DEQ will not perform the required technical or regulatory analysis on the applicant's behalf.

Instructions for Form FRA

.

Item 4 & 5. It is important that facilities review the most recent federal regulations when submitting their permit application to DEQ. Current federal regulations can be found at the following Web site: http://ecfr.gpoaccess.gov/cgi/t/text/text-idx?&c=ecfr&tpl=/ecfrbrowse/Title40/40tab_02.tpl.

Item 6. For each applicable subpart identified under items 4-5 conduct a complete regulatory analysis. The facility must follow the procedure given below or obtain permission from DEQ to provide the necessary information using an alternative procedure:

1. Retrieve a TEXT or PDF copy of the applicable federal regulation subpart(s) online at http://www.gpoaccess.gov/cfr/retrieve.html

2. Copy and paste the regulation(s) into your DEQ air permit application.

3. Highlight or underline sections in the regulation(s) that are applicable to the source(s).

4. Under each section of the subpart, explain why the source is subject to the section, or why the source is not subject to the section. When providing the explanation use a different font than the regulation (i.e***. bold, italic***) so that it is easy for the reader to determine the text that the applicant has provided. An example NSPS regulatory analysis is attached. The applicant must provide all necessary information needed to determine applicability. If information is lacking or the analysis is incomplete the application will be determined incomplete.

   EPA provides a web site dedicated to NSPS/NESHAP applicability determinations that may be useful to applicants. Follow this link to the applicability determination index Clean Air Act Applicability Determination Index - Compliance Monitoring - EPA. Another useful source of information is the preamble to the regulation which is published in the Federal Register on the date the regulation was promulgated. Federal Registers may be found online at Federal Register: Main Page. The date the regulation was published in the Federal Register is included in the footnotes of the regulation.

5. DEQ will assist in identifying the applicable requirements that the applicant must include in the application but will not perform the required technical or regulatory analysis on the applicant's behalf. Applicants should contact the Air Quality Permit Hotline (1-877-573-7648) to discuss NSPS/NESHAP regulatory analysis requirements or to schedule a meeting.

6. It also benefits facilities to document a non-applicability determination on federal air regulations which appear to apply to the facility but actually do not. A non-applicability determination will avoid future confusion and expedite the air permit application review. If you conduct an applicability determination and find that your activity is not NSPS or NESHAP affected facility an analysis should be submitted using the methods described above.

7. **It is not sufficient to simply provide a copy of the NSPS or NESHAP. The applicant must address each section of the regulation as described above and as shown in the example that is provided.**

EXAMPLE OF A NSPS REGULATORY ANALYSIS

[Title 40, Volume 6]
[Revised as of July 1, 2008]
From the U.S. Government Printing Office via GPO Access
[CITE: 40CFR60]

TITLE 40--PROTECTION OF ENVIRONMENT

CHAPTER I--ENVIRONMENTAL PROTECTION AGENCY (CONTINUED)

PART 60_STANDARDS OF PERFORMANCE FOR NEW STATIONARY SOURCES--
Table of Contents

Subpart H_Standards of Performance for Sulfuric Acid Plants

Sec.60.80 Applicability and designation of affected facility.

(a) The provisions of this subpart are applicable to each sulfuric acid production unit, which is the affected facility.
(b) Any facility under paragraph (a) of this section that commences construction or modification after August 17, 1971, is subject to the requirements of this subpart.

ACME Chemicals, Inc. is proposing to construct after August 17, 1971 a sulfuric acid plant which burns elemental sulfur as defined by 40 CFR 60.81(a). ACME is therefore affected by this subpart.

(Be sure to use the terms of the regulation to describe applicability; usually applicability is determined based on a specific date, definition of an affected facility, and rated input capacity. All of the applicability criteria must be addressed by the applicant.)

Note - if a determination of non-applicability is being submitted it is not necessary to address the remaining non-applicable regulatory sections. Be sure to provide the applicability determination in terms of the regulation (i.e. construction/modification date, rated input capacity, definition of affected facility).

Sec.60.81 Definitions.

As used in this subpart, all terms not defined herein shall have the meaning given them in the Act and in subpart A of this part.
(a) Sulfuric acid production unit means any facility producing sulfuric acid by the contact process by burning elemental sulfur, alkylation acid, hydrogen sulfide, organic sulfides and mercaptans, or acid sludge, but does not include facilities where conversion to sulfuric acid is utilized primarily as a means of preventing emissions to the atmosphere of sulfur dioxide or other sulfur compounds.
(b) Acid mist means sulfuric acid mist, as measured by Method 8 of appendix A to this part or an equivalent or alternative method.

ACME Chemicals, Inc. has read and understands these definitions and used them in providing this regulatory analysis.

Sec.60.82 Standard for sulfur dioxide.

(a) On and after the date on which the performance test required to be conducted by Sec.60.8 is completed, no owner or operator subject to the provisions of this subpart shall cause to be discharged into the atmosphere from any affected facility any gases which contain sulfur dioxide in excess of 2 kg per metric ton of acid produced (4 lb per ton), the production being expressed as 100 percent H2/SO4/.

ACME Chemicals, Inc. is subject to this standard and has provided a documented emission inventory (or manufacturer guarantee) which shows compliance.

Sec.60.83 Standard for acid mist.

(a) On and after the date on which the performance test required to be conducted by Sec.60.8 is completed, no owner or operator subject to the provisions of this subpart shall cause to be discharged into the atmosphere from any affected facility any gases which:

(1) Contain acid mist, expressed as H2/SO4/, in excess of 0.075 kg per metric ton of acid produced (0.15 lb per ton), the production being expressed as 100 percent H2/SO4/.

ACME Chemicals, Inc. is subject to this standard and has provided a documented emission inventory (or manufacturer guarantee) which shows compliance.

(2) Exhibit 10 percent opacity, or greater.

ACME Chemicals, Inc. understands that this will become a permit condition and has supplied a manufacturer guarantee that the sulfuric acid plant will comply with this standard.

Sec.60.84 Emission monitoring.

(a) A continuous monitoring system for the measurement of sulfur dioxide shall be installed, calibrated, maintained, and operated by the owner or operator. The pollutant gas used to prepare calibration gas mixtures under Performance Specification 2 and for calibration checks under Sec.60.13(d), shall be sulfur dioxide (SO2/). Method 8 shall be used for conducting monitoring system performance evaluations under Sec.60.13(c) except that only the sulfur dioxide portion of the Method 8 results shall be used. The span value shall be set at 1000 ppm of sulfur dioxide.

(b) The owner or operator shall establish a conversion factor for the purpose of converting monitoring data into units of the applicable standard (kg/metric ton, lb/ton). The conversion factor shall be determined, as a minimum, three times daily by measuring the concentration of sulfur dioxide entering the converter using suitable methods (e.g., the Reich test, National Air Pollution Control Administration Publication No. 999-AP-13) and calculating the appropriate conversion factor for each eight-hour period as follows:

CF=k[(1.000-0.015r)/(r-s)]

where:

CF=conversion factor (kg/metric ton per ppm, lb/ton per ppm).
k=constant derived from material balance. For determining CF in metric units, k=0.0653. For determining CF in English units, k=0.1306.
r=percentage of sulfur dioxide by volume entering the gas converter. Appropriate corrections must be made for air injection plants subject to the Administrator's approval.
s=percentage of sulfur dioxide by volume in the emissions to the atmosphere determined by the continuous monitoring system required under paragraph (a) of this section.

(c) The owner or operator shall record all conversion factors and values under paragraph (b) of this section from which they were computed (i.e., CF, r, and s).

ACME Chemicals, Inc. is not proposing to utilize Sections 60.84(a)-(c)listed above to monitor emissions. Instead ACME Chemicals is utilizing 40 CFR 60.84(d) listed below to monitor emissions of sulfur dioxide.

(d) Alternatively, a source that processes elemental sulfur or an ore that contains elemental sulfur and uses air to supply oxygen may use the following continuous emission monitoring approach and calculation procedures in determining SO2/ emission rates in terms of the standard. This procedure is not required, but is an alternative that would alleviate problems encountered in the measurement of gas velocities or production rate. Continuous emission monitoring systems for measuring SO2/, O2/, and CO2/ (if required) shall be installed, calibrated, maintained, and operated by the owner or operator and subjected to the certification procedures in Performance Specifications 2 and 3. The calibration procedure and span value for the SO2/ monitor shall be as specified in paragraph (b) of this section. The span value for CO2/ (if required) shall be 10 percent and for O2/ shall be 20.9 percent (air). A conversion factor based on process rate data is not necessary. Calculate the SO2/ emission rate as follows:

Es/=(Cs/ S)/[0.265-(0.126 %O2/)-(A
%CO2/)]

where:

Es/=emission rate of SO2/, kg/metric ton (lb/ton) of 100 percent of H2/SO4/ produced.
Cs/=concentration of SO2/, kg/dscm (lb/dscf).
S=acid production rate factor, 368 dscm/metric ton (11,800 dscf/ton) of 100 percent H2/SO4/ produced.
%O2/=oxygen concentration, percent dry basis.
A=auxiliary fuel factor,
=0.00 for no fuel.
=0.0226 for methane.
=0.0217 for natural gas.
=0.0196 for propane.
=0.0172 for No 2 oil.
=0.0161 for No 6 oil.
=0.0148 for coal.
=0.0126 for coke.
%CO2/= carbon dioxide concentration, percent dry basis.

Note: It is necessary in some cases to convert measured concentration units to other units for these calculations:

Use the following table for such conversions:

From--	To--	Multiply by--
g/scm.....	kg/scm.....	10-3
mg/scm.....	kg/scm.....	10-6
ppm (SO2).....	kg/scm.....	2.660x10-6
ppm (SO2).....	lb/scf.....	1.660x10-7

ACME Chemicals, Inc. has elected to use the monitoring requirements of the preceding section.

(e) For the purpose of reports under Sec.60.7(c), periods of excess emissions shall be all three-hour periods (or the arithmetic average of three consecutive one-hour periods) during which the integrated average sulfur dioxide emissions exceed the applicable standards under Sec.60.82.

ACME acknowledges that this section applies to the sulfuric acid plant.

Sec.60.85 Test methods and procedures.

(a) In conducting the performance tests required in Sec.60.8, the owner or operator shall use as reference methods and procedures the test methods in appendix A of this part or other methods and procedures as specified in this section, except as provided in Sec.60.8(b). Acceptable alternative methods and procedures are given in paragraph (c) of this section.

(b) The owner or operator shall determine compliance with the SO2/ acid mist, and visible emission standards in Sec. Sec. 60.82 and 60.83 as follows:

(1) The emission rate (E) of acid mist or SO2/ shall be computed for each run using the following equation:

E=(CQsd/)/(PK)

where:

E=emission rate of acid mist or SO2/ kg/metric ton (lb/ton) of 100 percent H2/SO4/ produced.
C=concentration of acid mist or SO2/, g/dscm (lb/dscf).
Qsd/=volumetric flow rate of the effluent gas, dscm/hr (dscf/hr).
P=production rate of 100 percent H2/SO4/, metric ton/hr (ton/hr).
K=conversion factor, 1000 g/kg (1.0 lb/lb).

(2) Method 8 shall be used to determine the acid mist and SO2/ concentrations (C's) and the volumetric flow rate (Qsd/) of the effluent gas. The moisture content may be considered to be zero. The sampling time and sample volume for each run shall be at least 60 minutes and 1.15 dscm (40.6 dscf).

(3) Suitable methods shall be used to determine the production rate (P) of 100 percent H2/SO4/ for each run. Material balance over the production system shall be used to confirm the production rate.

(4) Method 9 and the procedures in Sec.60.11 shall be used to determine opacity.

(c) The owner or operator may use the following as alternatives to

the reference methods and procedures specified in this section:

(1) If a source processes elemental sulfur or an ore that contains elemental sulfur and uses air to supply oxygen, the following procedure may be used instead of determining the volumetric flow rate and production rate:

(i) The integrated technique of Method 3 is used to determine the O2/ concentration and, if required, CO2/ concentration.

(ii) The SO2/ or acid mist emission rate is calculated as described in Sec.60.84(d), substituting the acid mist concentration for Cs/ as appropriate.

ACME Chemicals, Inc. acknowledges that performance tests shall be conducted as specified above.

Subpart ZZZZ—National Emissions Standards for Hazardous Air Pollutants for Stationary Reciprocating Internal Combustion Engines

Contents

WHAT THIS SUBPART COVERS

§ 63.6580 What is the purpose of subpart ZZZZ?
§ 63.6585 Am I subject to this subpart?
§ 63.6590 What parts of my plant does this subpart cover?
§ 63.6595 When do I have to comply with this subpart?

EMISSION AND OPERATING LIMITATIONS

§ 63.6600 What emission limitations and operating limitations must I meet if I own or operate a stationary RICE with a site rating of more than 500 brake HP located at a major source of HAP emissions?
§ 63.6601 What emission limitations must I meet if I own or operate a new or reconstructed 4SLB stationary RICE with a site rating of greater than or equal to 250 brake HP and less than or equal to 500 brake HP located at a major source of HAP emissions?
§ 63.6602 What emission limitations must I meet if I own or operate an existing stationary RICE with a site rating of equal to or less than 500 brake HP located at a major source of HAP emissions?
§ 63.6603 What emission limitations and operating limitations must I meet if I own or operate an existing stationary RICE located at an area source of HAP emissions?
§ 63.6604 What fuel requirements must I meet if I own or operate an existing stationary CI RICE?

GENERAL COMPLIANCE REQUIREMENTS

§ 63.6605 What are my general requirements for complying with this subpart?

TESTING AND INITIAL COMPLIANCE REQUIREMENTS

§ 63.6610 By what date must I conduct the initial performance tests or other initial compliance demonstrations if I own or operate a stationary RICE with a site rating of more than 500 brake HP located at a major source of HAP emissions?
§ 63.6611 By what date must I conduct the initial performance tests or other initial compliance demonstrations if I own or operate a new or reconstructed 4SLB SI stationary RICE with a site rating of greater than or equal to 250 and less than or equal to 500 brake HP located at a major source of HAP emissions?
§ 63.6612 By what date must I conduct the initial performance tests or other initial compliance demonstrations if I own or operate an existing stationary RICE with a site rating of less than or equal to 500 brake HP located at a major source of HAP emissions or an existing stationary RICE located at an area source of HAP emissions?
§ 63.6615 When must I conduct subsequent performance tests?
§ 63.6620 What performance tests and other procedures must I use?
§ 63.6625 What are my monitoring, installation, collection, operation, and maintenance requirements?
§ 63.6630 How do I demonstrate initial compliance with the emission limitations and operating limitations?

CONTINUOUS COMPLIANCE REQUIREMENTS

§ 63.6635 How do I monitor and collect data to demonstrate continuous compliance?
§ 63.6640 How do I demonstrate continuous compliance with the emission limitations and operating limitations?

NOTIFICATIONS, REPORTS, AND RECORDS

§ 63.6645 What notifications must I submit and when?
§ 63.6650 What reports must I submit and when?
§ 63.6655 What records must I keep?
§ 63.6660 In what form and how long must I keep my records?

OTHER REQUIREMENTS AND INFORMATION

§ 63.6665 What parts of the General Provisions apply to me?
§ 63.6670 Who implements and enforces this subpart?
§ 63.6675 What definitions apply to this subpart?
Table 1 a to Subpart ZZZZ of Part 63—Emission Limitations for Existing, New, and Reconstructed Spark Ignition, 4SRB Stationary RICE > 500 HP Located at a Major Source of HAP Emissions
Table 1 b to Subpart ZZZZ of Part 63—Operating Limitations for Existing, New, and Reconstructed Spark Ignition 4SRB Stationary RICE >500 HP Located at a Major Source of HAP Emissions and Existing Spark Ignition 4SRB Stationary RICE >500 HP Located at an Area Source of HAP Emissions
Table 2 a to Subpart ZZZZ of Part 63—Emission Limitations for New and Reconstructed 2SLB and Compression Ignition Stationary RICE >500 HP and New and Reconstructed 4SLB Stationary RICE ≥250 HP Located at a Major Source of HAP Emissions
Table 2 b to Subpart ZZZZ of Part 63— Operating Limitations for New and Reconstructed 2SLB and Compression Ignition Stationary RICE >500 HP Located at a Major Source of HAP Emissions, New and Reconstructed 4SLB Stationary RICE ≥250 HP Located at a Major Source of HAP Emissions, Existing Compression Ignition Stationary RICE >500 HP, and Existing 4SLB Stationary RICE >500 HP Located at an Area Source of HAP Emissions
Table 2 c to Subpart ZZZZ of Part 63—Requirements for Existing Compression Ignition Stationary RICE Located at a Major Source of HAP Emissions and Existing Spark Ignition Stationary RICE ≤ 500 HP Located at a Major Source of HAP Emissions
Table 2 d to Subpart ZZZZ of Part 63—Requirements for Existing Stationary RICE Located at Area Sources of HAP Emissions
Table 3 to Subpart ZZZZ of Part 63—Subsequent Performance Tests
Table 4 to Subpart ZZZZ of Part 63—Requirements for Performance Tests
Table 5 to Subpart ZZZZ of Part 63—Initial Compliance With Emission Limitations and Operating Limitations
Table 6 to Subpart ZZZZ of Part 63—Continuous Compliance With Emission Limitations, Operating Limitations, Work Practices, and Management Practices
Table 7 to Subpart ZZZZ of Part 63—Requirements for Reports
Table 8 to Subpart ZZZZ of Part 63—Applicability of General Provisions to Subpart ZZZZ.
Appendix A to Subpart ZZZZ of Part 63—XXX

SOURCE: 69 FR 33506, June 15, 2004, unless otherwise noted.

Back to Top

What This Subpart Covers

Back to Top

§ 63.6580 What is the purpose of subpart ZZZZ?

Subpart ZZZZ establishes national emission limitations and operating limitations for hazardous air pollutants (HAP) emitted from stationary reciprocating internal combustion engines (RICE) located at major and area sources of HAP emissions. This subpart also establishes requirements to demonstrate initial and continuous compliance with the emission limitations and operating limitations.

[73 FR 3603, Jan. 18, 2008]

Back to Top

§ 63.6585 Am I subject to this subpart?

Link to an amendment published at 78 FR 6700, January 30, 2013.

You are subject to this subpart if you own or operate a stationary RICE at a major or area source of HAP emissions, except if the stationary RICE is being tested at a stationary RICE test cell/stand.

(a) A stationary RICE is any internal combustion engine which uses reciprocating motion to convert heat energy into mechanical work and which is not mobile. Stationary RICE differ from mobile RICE in that a stationary RICE is not a non-road engine as defined at 40 CFR 1068.30, and is not used to propel a motor vehicle or a vehicle used solely for competition.

(b) A major source of HAP emissions is a plant site that emits or has the potential to emit any single HAP at a rate of 10 tons (9.07 megagrams) or more per year or any combination of HAP at a rate of 25 tons (22.68 megagrams) or more per year, except that for oil and gas production facilities, a major source of HAP emissions is determined for each surface site.

(c) An area source of HAP emissions is a source that is not a major source.

(d) If you are an owner or operator of an area source subject to this subpart, your status as an entity subject to a standard or other requirements under this subpart does not subject you to the obligation to obtain a permit under 40 CFR part 70 or 71, provided you are not required to obtain a permit under 40 CFR 70.3(a) or 40 CFR 71.3(a) for a reason other than your status as an area source under this subpart. Notwithstanding the previous sentence, you must continue to comply with the provisions of this subpart as applicable.

(e) If you are an owner or operator of a stationary RICE used for national security purposes, you may be eligible to request an exemption from the requirements of this subpart as described in 40 CFR part 1068, subpart C.

[69 FR 33506, June 15, 2004, as amended at 73 FR 3603, Jan. 18, 2008]

Idahoan Foods' (IFL) Idaho Falls Facility is an area source of HAP emissions. IFL operates one stationary RICE engine which is subject to the requirements of this subpart. As an area source, IFL is not required to obtain a part 70 or part 71 permit as a result of being subject to this rule.

Back to Top

§ 63.6590 What parts of my plant does this subpart cover?

Link to an amendment published at 78 FR 6700, January 30, 2013.

This subpart applies to each affected source.

(a) *Affected source.* An affected source is any existing, new, or reconstructed stationary RICE located at a major or area source of HAP emissions, excluding stationary RICE being tested at a stationary RICE test cell/stand.

(1) *Existing stationary RICE.*

(i) For stationary RICE with a site rating of more than 500 brake horsepower (HP) located at a major source of HAP emissions, a stationary RICE is existing if you commenced construction or reconstruction of the stationary RICE before December 19, 2002.

(ii) For stationary RICE with a site rating of less than or equal to 500 brake HP located at a major source of HAP emissions, a stationary RICE is existing if you commenced construction or reconstruction of the stationary RICE before June 12, 2006.

(iii) For stationary RICE located at an area source of HAP emissions, a stationary RICE is existing if you commenced construction or reconstruction of the stationary RICE before June 12, 2006.

(iv) A change in ownership of an existing stationary RICE does not make that stationary RICE a new or reconstructed stationary RICE.

(2) *New stationary RICE.* (i) A stationary RICE with a site rating of more than 500 brake HP located at a major source of HAP emissions is new if you commenced construction of the stationary RICE on or after December 19, 2002.

(ii) A stationary RICE with a site rating of equal to or less than 500 brake HP located at a major source of HAP emissions is new if you commenced construction of the stationary RICE on or after June 12, 2006.

(iii) A stationary RICE located at an area source of HAP emissions is new if you commenced construction of the stationary RICE on or after June 12, 2006.

(3) *Reconstructed stationary RICE.* (i) A stationary RICE with a site rating of more than 500 brake HP located at a major source of HAP emissions is reconstructed if you meet the definition of reconstruction in § 63.2 and reconstruction is commenced on or after December 19, 2002.

(ii) A stationary RICE with a site rating of equal to or less than 500 brake HP located at a major source of HAP emissions is reconstructed if you meet the definition of reconstruction in § 63.2 and reconstruction is commenced on or after June 12, 2006.

(iii) A stationary RICE located at an area source of HAP emissions is reconstructed if you meet the definition of reconstruction in § 63.2 and reconstruction is commenced on or after June 12, 2006.

(b) *Stationary RICE subject to limited requirements.* (1) An affected source which meets either of the criteria in paragraphs (b)(1)(i) through (ii) of this section does not have to meet the requirements of this subpart and of subpart A of this part except for the initial notification requirements of § 63.6645(f).

(i) The stationary RICE is a new or reconstructed emergency stationary RICE with a site rating of more than 500 brake HP located at a major source of HAP emissions.

(ii) The stationary RICE is a new or reconstructed limited use stationary RICE with a site rating of more than 500 brake HP located at a major source of HAP emissions.

(2) A new or reconstructed stationary RICE with a site rating of more than 500 brake HP located at a major source of HAP emissions which combusts landfill or digester gas equivalent to 10 percent or more of the gross heat input on an annual basis must meet the initial notification requirements of § 63.6645(f) and the requirements of §§ 63.6625(c), 63.6650(g), and 63.6655(c). These stationary RICE do not have to meet the emission limitations and operating limitations of this subpart.

(3) The following stationary RICE do not have to meet the requirements of this subpart and of subpart A of this part, including initial notification requirements:

(i) Existing spark ignition 2 stroke lean burn (2SLB) stationary RICE with a site rating of more than 500 brake HP located at a major source of HAP emissions;

(ii) Existing spark ignition 4 stroke lean burn (4SLB) stationary RICE with a site rating of more than 500 brake HP located at a major source of HAP emissions;

(iii) Existing emergency stationary RICE with a site rating of more than 500 brake HP located at a major source of HAP emissions;

(iv) Existing limited use stationary RICE with a site rating of more than 500 brake HP located at a major source of HAP emissions;

(v) Existing stationary RICE with a site rating of more than 500 brake HP located at a major source of HAP emissions that combusts landfill gas or digester gas equivalent to 10 percent or more of the gross heat input on an annual basis;

(vi) Existing residential emergency stationary RICE located at an area source of HAP emissions;

(vii) Existing commercial emergency stationary RICE located at an area source of HAP emissions; or

(viii) Existing institutional emergency stationary RICE located at an area source of HAP emissions.

(c) *Stationary RICE subject to Regulations under 40 CFR Part 60.* An affected source that meets any of the criteria in paragraphs (c)(1) through (7) of this section must meet the requirements of this part by meeting the requirements of 40 CFR part 60 subpart IIII, for compression ignition engines or 40 CFR part 60 subpart JJJJ, for spark ignition engines. No further requirements apply for such engines under this part.

(1) A new or reconstructed stationary RICE located at an area source;

The RICE engine located at IFL's Idaho Falls facility meets the definition or a new or reconstructed station RICE located at an area source. As such, the engine is subject to the requirements of 40 CFR part 60 subpart IIII. IFL has analyzed and will comply with these requirements. No further requirements under Subpart ZZZZ apply.

(2) A new or reconstructed 2SLB stationary RICE with a site rating of less than or equal to 500 brake HP located at a major source of HAP emissions;

(3) A new or reconstructed 4SLB stationary RICE with a site rating of less than 250 brake HP located at a major source of HAP emissions;

(4) A new or reconstructed spark ignition 4 stroke rich burn (4SRB) stationary RICE with a site rating of less than or equal to 500 brake HP located at a major source of HAP emissions;

(5) A new or reconstructed stationary RICE with a site rating of less than or equal to 500 brake HP located at a major source of HAP emissions which combusts landfill or digester gas equivalent to 10 percent or more of the gross heat input on an annual basis;

(6) A new or reconstructed emergency or limited use stationary RICE with a site rating of less than or equal to 500 brake HP located at a major source of HAP emissions;

(7) A new or reconstructed compression ignition (CI) stationary RICE with a site rating of less than or equal to 500 brake HP located at a major source of HAP emissions.

[69 FR 33506, June 15, 2004, as amended at 73 FR 3604, Jan. 18, 2008; 75 FR 9674, Mar. 3, 2010; 75 FR 37733, June 30, 2010; 75 FR 51588, Aug. 20, 2010]

Back to Top

e evaluation of each CPMS in accordance with your site-specific monitoring plan.

(c) If you are operating a new or reconstructed stationary RICE which fires landfill gas or digester gas equivalent to 10 percent or more of the gross heat input on an annual basis, you must monitor and record your fuel usage daily with separate fuel meters to measure the volumetric flow rate of each fuel. In addition, you must operate your stationary RICE in a manner which reasonably minimizes HAP emissions.

(d) If you are operating a new or reconstructed emergency 4SLB stationary RICE with a site rating of greater than or equal to 250 and less than or equal to 500 brake HP located at a major source of HAP emissions, you must install a non-resettable hour meter prior to the startup of the engine.

(e) If you own or operate any of the following stationary RICE, you must operate and maintain the stationary RICE and after-treatment control device (if any) according to the manufacturer's emission-related written instructions or develop your own maintenance plan which must provide to the extent practicable for the maintenance and operation of the engine in a manner consistent with good air pollution control practice for minimizing emissions:

(1) An existing stationary RICE with a site rating of less than 100 HP located at a major source of HAP emissions;

(2) An existing emergency or black start stationary RICE with a site rating of less than or equal to 500 HP located at a major source of HAP emissions;

(3) An existing emergency or black start stationary RICE located at an area source of HAP emissions;

(4) An existing non-emergency, non-black start stationary CI RICE with a site rating less than or equal to 300 HP located at an area source of HAP emissions;

(5) An existing non-emergency, non-black start 2SLB stationary RICE located at an area source of HAP emissions;

(6) An existing non-emergency, non-black start landfill or digester gas stationary RICE located at an area source of HAP emissions;

(7) An existing non-emergency, non-black start 4SLB stationary RICE with a site rating less than or equal to 500 HP located at an area source of HAP emissions;

(8) An existing non-emergency, non-black start 4SRB stationary RICE with a site rating less than or equal to 500 HP located at an area source of HAP emissions;

(9) An existing, non-emergency, non-black start 4SLB stationary RICE with a site rating greater than 500 HP located at an area source of HAP emissions that is operated 24 hours or less per calendar year; and

(10) An existing, non-emergency, non-black start 4SRB stationary RICE with a site rating greater than 500 HP located at an area source of HAP emissions that is operated 24 hours or less per calendar year.

(f) If you own or operate an existing emergency stationary RICE with a site rating of less than or equal to 500 brake HP located at a major source of HAP emissions or an existing emergency stationary RICE located at an area source of HAP emissions, you must install a non-resettable hour meter if one is not already installed.

(g) If you own or operate an existing non-emergency, non-black start CI engine greater than or equal to 300 HP that is not equipped with a closed crankcase ventilation system, you must comply with either paragraph (g)(1) or paragraph (g)(2) of this section. Owners and operators must follow the manufacturer's specified maintenance requirements for operating and maintaining the open or closed crankcase ventilation systems and replacing the crankcase filters, or can request the Administrator to approve different maintenance requirements that are as protective as manufacturer requirements. Existing CI engines located at area sources in areas of Alaska not accessible by the FAHS do not have to meet the requirements of paragraph (g) of this section.

(1) Install a closed crankcase ventilation system that prevents crankcase emissions from being emitted to the atmosphere, or

(2) Install an open crankcase filtration emission control system that reduces emissions from the crankcase by filtering the exhaust stream to remove oil mist, particulates, and metals.

(h) If you operate a new, reconstructed, or existing stationary engine, you must minimize the engine's time spent at idle during startup and minimize the engine's startup time to a period needed for appropriate and safe loading of the engine, not to exceed 30 minutes, after which time the emission standards applicable to all times other than startup in Tables 1a, 2a, 2c, and 2d to this subpart apply.

(i) If you own or operate a stationary CI engine that is subject to the work, operation or management practices in items 1 or 2 of Table 2c to this subpart or in items 1 or 4 of Table 2d to this subpart, you have the option of utilizing an oil analysis program in order to extend the specified oil change requirement in Tables 2c and 2d to this subpart. The oil analysis must be performed at the same frequency specified for changing the oil in Table 2c or 2d to this subpart. The analysis program must at a minimum analyze the following three parameters: Total Base Number, viscosity, and percent water content. The condemning limits for these parameters are as follows: Total Base Number is less than 30 percent of the Total Base Number of the oil when new; viscosity of the oil has changed by more than 20 percent from the viscosity of the oil when new; or percent water content (by volume) is greater than 0.5. If all of these condemning limits are not exceeded, the engine owner or operator is not required to change the oil. If any of the limits are exceeded, the engine owner or operator must change the oil within 2 days of receiving the results of the analysis; if the engine is not in operation when the results of the analysis are received, the engine owner or operator must change the oil within 2 days or before commencing operation, whichever is later. The owner or operator must keep records of the parameters that are analyzed as part of the program, the results of the analysis, and the oil changes for the engine. The analysis program must be part of the maintenance plan for the engine.

(j) If you own or operate a stationary SI engine that is subject to the work, operation or management practices in items 6, 7, or 8 of Table 2c to this subpart or in items 5, 6, 7, 9, or 11 of Table 2d to this subpart, you have the option of utilizing an oil analysis program in order to extend the specified oil change requirement in Tables 2c and 2d to this subpart. The oil analysis must be performed at the same frequency specified for changing the oil in Table 2c or 2d to this subpart. The analysis program must at a minimum analyze the following three parameters: Total Acid Number, viscosity, and percent water content. The condemning limits for these parameters are as follows: Total Acid Number increases by more than 3.0 milligrams of potassium hydroxide (KOH) per gram from Total Acid Number of the oil when new; viscosity of the oil has changed by more than 20 percent from the viscosity of the oil when new; or percent water content (by volume) is greater than 0.5. If all of these condemning limits are not exceeded, the engine owner or operator is not required to change the oil. If any of the limits are exceeded, the engine owner or operator must change the oil within 2 days of receiving the results of the analysis; if the engine is not in operation when the results of the analysis are received, the engine owner or operator must change the oil within 2 days or before commencing operation, whichever is later. The owner or operator must keep records of the parameters that are analyzed as part of the program, the results of the analysis, and the oil changes for the engine. The analysis program must be part of the maintenance plan for the engine.

[69 FR 33506, June 15, 2004, as amended at 73 FR 3606, Jan. 18, 2008; 75 FR 9676, Mar. 3, 2010; 75 FR 51589, Aug. 20, 2010; 76 FR 12866, Mar. 9, 2011]

Back to Top

§ 63.6675 What definitions apply to this subpart?

Link to an amendment published at 78 FR 6706, January 30, 2013.

Terms used in this subpart are defined in the Clean Air Act (CAA); in 40 CFR 63.2, the General Provisions of this part; and in this section as follows:

Area source means any stationary source of HAP that is not a major source as defined in part 63.

Associated equipment as used in this subpart and as referred to in section 112(n)(4) of the CAA, means equipment associated with an oil or natural gas exploration or production well, and includes all equipment from the well bore to the point of custody transfer, except glycol dehydration units, storage vessels with potential for flash emissions, combustion turbines, and stationary RICE.

Black start engine means an engine whose only purpose is to start up a combustion turbine.

CAA means the Clean Air Act (42 U.S.C. 7401 *et seq.,* as amended by Public Law 101-549, 104 Stat. 2399).

Commercial emergency stationary RICE means an emergency stationary RICE used in commercial establishments such as office buildings, hotels, stores, telecommunications facilities, restaurants, financial institutions such as banks, doctor's offices, and sports and performing arts facilities.

Compression ignition means relating to a type of stationary internal combustion engine that is not a spark ignition engine.

Custody transfer means the transfer of hydrocarbon liquids or natural gas: After processing and/or treatment in the producing operations, or from storage vessels or automatic transfer facilities or other such equipment, including product loading racks, to pipelines or any other forms of transportation. For the purposes of this subpart, the point at which such liquids or natural gas enters a natural gas processing plant is a point of custody transfer.

Deviation means any instance in which an affected source subject to this subpart, or an owner or operator of such a source:

(1) Fails to meet any requirement or obligation established by this subpart, including but not limited to any emission limitation or operating limitation;

(2) Fails to meet any term or condition that is adopted to implement an applicable requirement in this subpart and that is included in the operating permit for any affected source required to obtain such a permit; or

(3) Fails to meet any emission limitation or operating limitation in this subpart during malfunction, regardless or whether or not such failure is permitted by this subpart.

(4) Fails to satisfy the general duty to minimize emissions established by § 63.6(e)(1)(i).

Diesel engine means any stationary RICE in which a high boiling point liquid fuel injected into the combustion chamber ignites when the air charge has been compressed to a temperature sufficiently high for auto-ignition. This process is also known as compression ignition.

Diesel fuel means any liquid obtained from the distillation of petroleum with a boiling point of approximately 150 to 360 degrees Celsius. One commonly used form is fuel oil number 2. Diesel fuel also includes any non-distillate fuel with comparable physical and chemical properties (*e.g.* biodiesel) that is suitable for use in compression ignition engines.

Digester gas means any gaseous by-product of wastewater treatment typically formed through the anaerobic decomposition of organic waste materials and composed principally of methane and CO_2 .

Dual-fuel engine means any stationary RICE in which a liquid fuel (typically diesel fuel) is used for compression ignition and gaseous fuel (typically natural gas) is used as the primary fuel.

Emergency stationary RICE means any stationary internal combustion engine whose operation is limited to emergency situations and required testing and maintenance. Examples include stationary RICE used to produce power for critical networks or equipment (including power supplied to portions of a facility) when electric power from the local utility (or the normal power source, if the facility runs on its own power production) is interrupted, or stationary RICE used to pump water in the case of fire or flood, *etc.* Stationary RICE used for peak shaving are not considered emergency stationary RICE. Stationary RICE used to supply power to an electric grid or that supply non-emergency power as part of a financial arrangement with another entity are not considered to be emergency engines, except as permitted under § 63.6640(f). All emergency stationary RICE must comply with the requirements specified in § 63.6640(f) in order to be considered emergency stationary RICE. If the engine does not comply with the requirements specified in § 63.6640(f), then it is not considered to be an emergency stationary RICE under this subpart.

Engine startup means the time from initial start until applied load and engine and associated equipment reaches steady state or normal operation. For stationary engine with catalytic controls, engine startup means the time from initial start until applied load and engine and associated equipment, including the catalyst, reaches steady state or normal operation.

Four-stroke engine means any type of engine which completes the power cycle in two crankshaft revolutions, with intake and compression strokes in the first revolution and power and exhaust strokes in the second revolution.

Gaseous fuel means a material used for combustion which is in the gaseous state at standard atmospheric temperature and pressure conditions.

Gasoline means any fuel sold in any State for use in motor vehicles and motor vehicle engines, or nonroad or stationary engines, and commonly or commercially known or sold as gasoline.

Glycol dehydration unit means a device in which a liquid glycol (including, but not limited to, ethylene glycol, diethylene glycol, or triethylene glycol) absorbent directly contacts a natural gas stream and absorbs water in a contact tower or absorption column (absorber). The glycol contacts and absorbs water vapor and other gas stream constituents from the natural gas and becomes “rich” glycol. This glycol is then regenerated in the glycol dehydration unit reboiler. The “lean” glycol is then recycled.

Hazardous air pollutants (HAP) means any air pollutants listed in or pursuant to section 112(b) of the CAA.

Institutional emergency stationary RICE means an emergency stationary RICE used in institutional establishments such as medical centers, nursing homes, research centers, institutions of higher education, correctional facilities, elementary and secondary schools, libraries, religious establishments, police stations, and fire stations.

ISO standard day conditions means 288 degrees Kelvin (15 degrees Celsius), 60 percent relative humidity and 101.3 kilopascals pressure.

Landfill gas means a gaseous by-product of the land application of municipal refuse typically formed through the anaerobic decomposition of waste materials and composed principally of methane and CO_2 .

Lean burn engine means any two-stroke or four-stroke spark ignited engine that does not meet the definition of a rich burn engine.

Limited use stationary RICE means any stationary RICE that operates less than 100 hours per year.

Liquefied petroleum gas means any liquefied hydrocarbon gas obtained as a by-product in petroleum refining of natural gas production.

Liquid fuel means any fuel in liquid form at standard temperature and pressure, including but not limited to diesel, residual/crude oil, kerosene/naphtha (jet fuel), and gasoline.

Major Source, as used in this subpart, shall have the same meaning as in § 63.2, except that:

(1) Emissions from any oil or gas exploration or production well (with its associated equipment (as defined in this section)) and emissions from any pipeline compressor station or pump station shall not be aggregated with emissions from other similar units, to determine whether such emission points or stations are major sources, even when emission points are in a contiguous area or under common control;

(2) For oil and gas production facilities, emissions from processes, operations, or equipment that are not part of the same oil and gas production facility, as defined in § 63.1271 of subpart HHH of this part, shall not be aggregated;

(3) For production field facilities, only HAP emissions from glycol dehydration units, storage vessel with the potential for flash emissions, combustion turbines and reciprocating internal combustion engines shall be aggregated for a major source determination; and

(4) Emissions from processes, operations, and equipment that are not part of the same natural gas transmission and storage facility, as defined in § 63.1271 of subpart HHH of this part, shall not be aggregated.

Malfunction means any sudden, infrequent, and not reasonably preventable failure of air pollution control equipment, process equipment, or a process to operate in a normal or usual manner which causes, or has the potential to cause, the emission limitations in an applicable standard to be exceeded. Failures that are caused in part by poor maintenance or careless operation are not malfunctions.

Natural gas means a naturally occurring mixture of hydrocarbon and non-hydrocarbon gases found in geologic formations beneath the Earth's surface, of which the principal constituent is methane. Natural gas may be field or pipeline quality.

Non-selective catalytic reduction (NSCR) means an add-on catalytic nitrogen oxides (NO_x) control device for rich burn engines that, in a two-step reaction, promotes the conversion of excess oxygen, NO_x , CO, and volatile organic compounds (VOC) into CO_2 , nitrogen, and water.

Oil and gas production facility as used in this subpart means any grouping of equipment where hydrocarbon liquids are processed, upgraded (*i.e.,* remove impurities or other constituents to meet contract specifications), or stored prior to the point of custody transfer; or where natural gas is processed, upgraded, or stored prior to entering the natural gas transmission and storage source category. For purposes of a major source determination, facility (including a building, structure, or installation) means oil and natural gas production and processing equipment that is located within the boundaries of an individual surface site as defined in this section. Equipment that is part of a facility will typically be located within close proximity to other equipment located at the same facility. Pieces of production equipment or groupings of equipment located on different oil and gas leases, mineral fee tracts, lease tracts, subsurface or surface unit areas, surface fee tracts, surface lease tracts, or separate surface sites, whether or not connected by a road, waterway, power line or pipeline, shall not be considered part of the same facility. Examples of facilities in the oil and natural gas production source category include, but are not limited to, well sites, satellite tank batteries, central tank batteries, a compressor station that transports natural gas to a natural gas processing plant, and natural gas processing plants.

Oxidation catalyst means an add-on catalytic control device that controls CO and VOC by oxidation.

Peaking unit or engine means any standby engine intended for use during periods of high demand that are not emergencies.

Percent load means the fractional power of an engine compared to its maximum manufacturer's design capacity at engine site conditions. Percent load may range between 0 percent to above 100 percent.

Potential to emit means the maximum capacity of a stationary source to emit a pollutant under its physical and operational design. Any physical or operational limitation on the capacity of the stationary source to emit a pollutant, including air pollution control equipment and restrictions on hours of operation or on the type or amount of material combusted, stored, or processed, shall be treated as part of its design if the limitation or the effect it would have on emissions is federally enforceable. For oil and natural gas production facilities subject to subpart HH of this part, the potential to emit provisions in § 63.760(a) may be used. For natural gas transmission and storage facilities subject to subpart HHH of this part, the maximum annual facility gas throughput for storage facilities may be determined according to § 63.1270(a)(1) and the maximum annual throughput for transmission facilities may be determined according to § 63.1270(a)(2).

Production field facility means those oil and gas production facilities located prior to the point of custody transfer.

Production well means any hole drilled in the earth from which crude oil, condensate, or field natural gas is extracted.

Propane means a colorless gas derived from petroleum and natural gas, with the molecular structure $C_3 H_8$.

Residential emergency stationary RICE means an emergency stationary RICE used in residential establishments such as homes or apartment buildings.

Responsible official means responsible official as defined in 40 CFR 70.2.

Rich burn engine means any four-stroke spark ignited engine where the manufacturer's recommended operating air/fuel ratio divided by the stoichiometric air/fuel ratio at full load conditions is less than or equal to 1.1. Engines originally manufactured as rich burn engines, but modified prior to December 19, 2002 with passive emission control technology for NO_x (such as pre-combustion chambers) will be considered lean burn engines. Also, existing engines where there are no

manufacturer's recommendations regarding air/fuel ratio will be considered a rich burn engine if the excess oxygen content of the exhaust at full load conditions is less than or equal to 2 percent.

Site-rated HP means the maximum manufacturer's design capacity at engine site conditions.

Spark ignition means relating to either: A gasoline-fueled engine; or any other type of engine with a spark plug (or other sparking device) and with operating characteristics significantly similar to the theoretical Otto combustion cycle. Spark ignition engines usually use a throttle to regulate intake air flow to control power during normal operation. Dual-fuel engines in which a liquid fuel (typically diesel fuel) is used for CI and gaseous fuel (typically natural gas) is used as the primary fuel at an annual average ratio of less than 2 parts diesel fuel to 100 parts total fuel on an energy equivalent basis are spark ignition engines.

Stationary reciprocating internal combustion engine (RICE) means any reciprocating internal combustion engine which uses reciprocating motion to convert heat energy into mechanical work and which is not mobile. Stationary RICE differ from mobile RICE in that a stationary RICE is not a non-road engine as defined at 40 CFR 1068.30, and is not used to propel a motor vehicle or a vehicle used solely for competition.

Stationary RICE test cell/stand means an engine test cell/stand, as defined in subpart PPPPP of this part, that tests stationary RICE.

Stoichiometric means the theoretical air-to-fuel ratio required for complete combustion.

Storage vessel with the potential for flash emissions means any storage vessel that contains a hydrocarbon liquid with a stock tank gas-to-oil ratio equal to or greater than 0.31 cubic meters per liter and an American Petroleum Institute gravity equal to or greater than 40 degrees and an actual annual average hydrocarbon liquid throughput equal to or greater than 79,500 liters per day. Flash emissions occur when dissolved hydrocarbons in the fluid evolve from solution when the fluid pressure is reduced.

Subpart means 40 CFR part 63, subpart ZZZZ.

Surface site means any combination of one or more graded pad sites, gravel pad sites, foundations, platforms, or the immediate physical location upon which equipment is physically affixed.

Two-stroke engine means a type of engine which completes the power cycle in single crankshaft revolution by combining the intake and compression operations into one stroke and the power and exhaust operations into a second stroke. This system requires auxiliary scavenging and inherently runs lean of stoichiometric.

[69 FR 33506, June 15, 2004, as amended at 71 FR 20467, Apr. 20, 2006; 73 FR 3607, Jan. 18, 2008; 75 FR 9679, Mar. 3, 2010; 75 FR 51592, Aug. 20, 2010; 76 FR 12867, Mar. 9, 2011]

IFL has read and understands the definitions presented in this subpart as they apply to IFL facility equipment and operations.

Subpart IIII—Standards of Performance for Stationary Compression Ignition Internal Combustion Engines

Contents

WHAT THIS SUBPART COVERS

§ 60.4200 Am I subject to this subpart?

EMISSION STANDARDS FOR MANUFACTURERS

§ 60.4201 What emission standards must I meet for non-emergency engines if I am a stationary CI internal combustion engine manufacturer?
§ 60.4202 What emission standards must I meet for emergency engines if I am a stationary CI internal combustion engine manufacturer?
§ 60.4203 How long must my engines meet the emission standards if I am a manufacturer of stationary CI internal combustion engines?

EMISSION STANDARDS FOR OWNERS AND OPERATORS

§ 60.4204 What emission standards must I meet for non-emergency engines if I am an owner or operator of a stationary CI internal combustion engine?
§ 60.4205 What emission standards must I meet for emergency engines if I am an owner or operator of a stationary CI internal combustion engine?
§ 60.4206 How long must I meet the emission standards if I am an owner or operator of a stationary CI internal combustion engine?

FUEL REQUIREMENTS FOR OWNERS AND OPERATORS

§ 60.4207 What fuel requirements must I meet if I am an owner or operator of a stationary CI internal combustion engine subject to this subpart?

OTHER REQUIREMENTS FOR OWNERS AND OPERATORS

§ 60.4208 What is the deadline for importing or installing stationary CI ICE produced in previous model years?
§ 60.4209 What are the monitoring requirements if I am an owner or operator of a stationary CI internal combustion engine?

COMPLIANCE REQUIREMENTS

§ 60.4210 What are my compliance requirements if I am a stationary CI internal combustion engine manufacturer?
§ 60.4211 What are my compliance requirements if I am an owner or operator of a stationary CI internal combustion engine?

TESTING REQUIREMENTS FOR OWNERS AND OPERATORS

§ 60.4212 What test methods and other procedures must I use if I am an owner or operator of a stationary CI internal combustion engine with a displacement of less than 30 liters per cylinder?
§ 60.4213 What test methods and other procedures must I use if I am an owner or operator of a stationary CI internal combustion engine with a displacement of greater than or equal to 30 liters per cylinder?

NOTIFICATION, REPORTS, AND RECORDS FOR OWNERS AND OPERATORS

§ 60.4214 What are my notification, reporting, and recordkeeping requirements if

SPECIAL REQUIREMENTS

§ 60.4215 What requirements must I meet for engines used in Guam, American Samoa, or the Commonwealth of the Northern Mariana Islands?
§ 60.4216 What requirements must I meet for engines used in Alaska?
§ 60.4217 What emission standards must I meet if I am an owner or operator of a stationary internal combustion engine using special fuels?

GENERAL PROVISIONS

§ 60.4218 What parts of the General Provisions apply to me?
§ 60.4219 What definitions apply to this subpart?
Table 1 to Subpart IIII of Part 60—Emission Standards for Stationary Pre-2007 Model Year Engines With a Displacement of <10 Liters per Cylinder and 2007-2010 Model Year Engines >2,237 KW (3,000 HP) and With a Displacement of <10 Liters per Cylinder
Table 2 to Subpart IIII of Part 60—Emission Standards for 2008 Model Year and Later Emergency Stationary CI ICE <37 KW (50 HP) With a Displacement of <10 Liters per Cylinder
Table 3 to Subpart IIII of Part 60—Certification Requirements for Stationary Fire Pump Engines
Table 4 to Subpart IIII of Part 60—Emission Standards for Stationary Fire Pump Engines

Table 5 to Subpart IIII of Part 60—Labeling and Recordkeeping Requirements for New Stationary Emergency Engines
Table 6 to Subpart IIII of Part 60—Optional 3-Mode Test Cycle for Stationary Fire Pump Engines
Table 7 to Subpart IIII of Part 60—Requirements for Performance Tests for Stationary CI ICE With a Displacement of ≥30 Liters per Cylinder
Table 8 to Subpart IIII of Part 60—Applicability of General Provisions to Subpart IIII

SOURCE: 71 FR 39172, July 11, 2006, unless otherwise noted.

Back to Top

What This Subpart Covers

Back to Top

§ 60.4200 Am I subject to this subpart?

(a) The provisions of this subpart are applicable to manufacturers, owners, and operators of stationary compression ignition (CI) internal combustion engines (ICE) and other persons as specified in paragraphs (a)(1) through (4) of this section. For the purposes of this subpart, the date that construction commences is the date the engine is ordered by the owner or operator.

(1) Manufacturers of stationary CI ICE with a displacement of less than 30 liters per cylinder where the model year is:

(i) 2007 or later, for engines that are not fire pump engines;

(ii) The model year listed in Table 3 to this subpart or later model year, for fire pump engines.

(2) Owners and operators of stationary CI ICE that commence construction after July 11, 2005, where the stationary CI ICE are:

(i) Manufactured after April 1, 2006, and are not fire pump engines, or

(ii) Manufactured as a certified National Fire Protection Association (NFPA) fire pump engine after July 1, 2006.

(3) Owners and operators of any stationary CI ICE that are modified or reconstructed after July 11, 2005 and any person that modifies or reconstructs any stationary CI ICE after July 11, 2005.

(4) The provisions of § 60.4208 of this subpart are applicable to all owners and operators of stationary CI ICE that commence construction after July 11, 2005.

(b) The provisions of this subpart are not applicable to stationary CI ICE being tested at a stationary CI ICE test cell/stand.

(c) If you are an owner or operator of an area source subject to this subpart, you are exempt from the obligation to obtain a permit under 40 CFR part 70 or 40 CFR part 71, provided you are not required to obtain a permit under 40 CFR 70.3(a) or 40 CFR 71.3(a) for a reason other than your status as an area source under this subpart. Notwithstanding the previous sentence, you must continue to comply with the provisions of this subpart applicable to area sources.

(d) Stationary CI ICE may be eligible for exemption from the requirements of this subpart as described in 40 CFR part 1068, subpart C (or the exemptions described in 40 CFR part 89, subpart J and 40 CFR part 94, subpart J, for engines that would need to be certified to standards in those parts), except that owners and operators, as well as manufacturers, may be eligible to request an exemption for national security.

(e) Owners and operators of facilities with CI ICE that are acting as temporary replacement units and that are located at a stationary source for less than 1 year and that have been properly certified as meeting the standards that would be applicable to such engine under the appropriate nonroad engine provisions, are not required to meet any other provisions under this subpart with regard to such engines.

[71 FR 39172, July 11, 2006, as amended at 76 FR 37967, June 28, 2011]

Idahoan Foods, LLC (IFL) is considered an owner/operator of a stationary CI ICE as defined 60.4219 which is a certified NFPA fire pump engine and was manufactured after July 1, 2006. IFL is therefore subject to this subpart.

Emission Standards for Manufacturers

Back to Top

§ 60.4201 What emission standards must I meet for non-emergency engines if I am a stationary CI internal combustion engine manufacturer?

(a) Stationary CI internal combustion engine manufacturers must certify their 2007 model year and later non-emergency stationary CI ICE with a maximum engine power less than or equal to 2,237 kilowatt (KW) (3,000 horsepower (HP)) and a displacement of less than 10 liters per cylinder to the certification emission standards for new nonroad CI engines in 40 CFR 89.112, 40 CFR 89.113, 40 CFR 1039.101, 40 CFR 1039.102, 40 CFR 1039.104, 40 CFR 1039.105, 40 CFR 1039.107, and 40 CFR 1039.115, as applicable, for all pollutants, for the same model year and maximum engine power.

(b) Stationary CI internal combustion engine manufacturers must certify their 2007 through 2010 model year non-emergency stationary CI ICE with a maximum engine power greater than 2,237 KW (3,000 HP) and a displacement of less than 10 liters per cylinder to the emission standards in table 1 to this subpart, for all pollutants, for the same maximum engine power.

(c) Stationary CI internal combustion engine manufacturers must certify their 2011 model year and later non-emergency stationary CI ICE with a maximum engine power greater than 2,237 KW (3,000 HP) and a displacement of less than 10 liters per cylinder to the certification emission standards for new nonroad CI engines in 40 CFR 1039.101, 40 CFR 1039.102, 40 CFR 1039.104, 40 CFR 1039.105, 40 CFR 1039.107, and 40 CFR 1039.115, as applicable, for all pollutants, for the same maximum engine power.

(d) Stationary CI internal combustion engine manufacturers must certify the following non-emergency stationary CI ICE to the certification emission standards for new marine CI engines in 40 CFR 94.8, as applicable, for all pollutants, for the same displacement and maximum engine power:

(1) Their 2007 model year through 2012 non-emergency stationary CI ICE with a displacement of greater than or equal to 10 liters per cylinder and less than 30 liters per cylinder;

(2) Their 2013 model year non-emergency stationary CI ICE with a maximum engine power greater than or equal to 3,700 KW (4,958 HP) and a displacement of greater than or equal to 10 liters per cylinder and less than 15 liters per cylinder; and

(3) Their 2013 model year non-emergency stationary CI ICE with a displacement of greater than or equal to 15 liters per cylinder and less than 30 liters per cylinder.

(e) Stationary CI internal combustion engine manufacturers must certify the following non-emergency stationary CI ICE to the certification emission standards and other requirements for new marine CI engines in 40 CFR 1042.101, 40 CFR 1042.107, 40 CFR 1042.110, 40 CFR 1042.115, 40 CFR 1042.120, and 40 CFR 1042.145, as applicable, for all pollutants, for the same displacement and maximum engine power:

(1) Their 2013 model year non-emergency stationary CI ICE with a maximum engine power less than 3,700 KW (4,958 HP) and a displacement of greater than or equal to 10 liters per cylinder and less than 15 liters per cylinder; and

(2) Their 2014 model year and later non-emergency stationary CI ICE with a displacement of greater than or equal to 10 liters per cylinder and less than 30 liters per cylinder.

(f) Notwithstanding the requirements in paragraphs (a) through (c) of this section, stationary non-emergency CI ICE identified in paragraphs (a) and (c) may be certified to the provisions of 40 CFR part 94 or, if Table 1 to 40 CFR 1042.1 identifies 40 CFR part 1042 as being applicable, 40 CFR part 1042, if the engines will be used solely in either or both of the following locations:

(1) Areas of Alaska not accessible by the Federal Aid Highway System (FAHS); and

(2) Marine offshore installations.

(g) Notwithstanding the requirements in paragraphs (a) through (f) of this section, stationary CI internal combustion engine manufacturers are not required to certify reconstructed engines; however manufacturers may elect to do so. The reconstructed

engine must be certified to the emission standards specified in paragraphs (a) through (e) of this section that are applicable to the model year, maximum engine power, and displacement of the reconstructed stationary CI ICE.

[71 FR 39172, July 11, 2006, as amended at 76 FR 37967, June 28, 2011]

IFL is not an engine manufacturer and is therefore not subject to this section.

Back to Top

§ 60.4202 What emission standards must I meet for emergency engines if I am a stationary CI internal combustion engine manufacturer?

(a) Stationary CI internal combustion engine manufacturers must certify their 2007 model year and later emergency stationary CI ICE with a maximum engine power less than or equal to 2,237 KW (3,000 HP) and a displacement of less than 10 liters per cylinder that are not fire pump engines to the emission standards specified in paragraphs (a)(1) through (2) of this section.

(1) For engines with a maximum engine power less than 37 KW (50 HP):

(i) The certification emission standards for new nonroad CI engines for the same model year and maximum engine power in 40 CFR 89.112 and 40 CFR 89.113 for all pollutants for model year 2007 engines, and

(ii) The certification emission standards for new nonroad CI engines in 40 CFR 1039.104, 40 CFR 1039.105, 40 CFR 1039.107, 40 CFR 1039.115, and table 2 to this subpart, for 2008 model year and later engines.

(2) For engines with a maximum engine power greater than or equal to 37 KW (50 HP), the certification emission standards for new nonroad CI engines for the same model year and maximum engine power in 40 CFR 89.112 and 40 CFR 89.113 for all pollutants beginning in model year 2007.

(b) Stationary CI internal combustion engine manufacturers must certify their 2007 model year and later emergency stationary CI ICE with a maximum engine power greater than 2,237 KW (3,000 HP) and a displacement of less than 10 liters per cylinder that are not fire pump engines to the emission standards specified in paragraphs (b)(1) through (2) of this section.

(1) For 2007 through 2010 model years, the emission standards in table 1 to this subpart, for all pollutants, for the same maximum engine power.

(2) For 2011 model year and later, the certification emission standards for new nonroad CI engines for engines of the same model year and maximum engine power in 40 CFR 89.112 and 40 CFR 89.113 for all pollutants.

(c) [Reserved]

(d) Beginning with the model years in table 3 to this subpart, stationary CI internal combustion engine manufacturers must certify their fire pump stationary CI ICE to the emission standards in table 4 to this subpart, for all pollutants, for the same model year and NFPA nameplate power.

(e) Stationary CI internal combustion engine manufacturers must certify the following emergency stationary CI ICE that are not fire pump engines to the certification emission standards for new marine CI engines in 40 CFR 94.8, as applicable, for all pollutants, for the same displacement and maximum engine power:

(1) Their 2007 model year through 2012 emergency stationary CI ICE with a displacement of greater than or equal to 10 liters per cylinder and less than 30 liters per cylinder;

(2) Their 2013 model year and later emergency stationary CI ICE with a maximum engine power greater than or equal to 3,700 KW (4,958 HP) and a displacement of greater than or equal to 10 liters per cylinder and less than 15 liters per cylinder;

(3) Their 2013 model year emergency stationary CI ICE with a displacement of greater than or equal to 15 liters per cylinder and less than 30 liters per cylinder; and

(4) Their 2014 model year and later emergency stationary CI ICE with a maximum engine power greater than or equal to 2,000 KW (2,682 HP) and a displacement of greater than or equal to 15 liters per cylinder and less than 30 liters per cylinder.

(f) Stationary CI internal combustion engine manufacturers must certify the following emergency stationary CI ICE to the certification emission standards and other requirements applicable to Tier 3 new marine CI engines in 40 CFR 1042.101, 40 CFR 1042.107, 40 CFR 1042.115, 40 CFR 1042.120, and 40 CFR 1042.145, for all pollutants, for the same displacement and maximum engine power:

(1) Their 2013 model year and later emergency stationary CI ICE with a maximum engine power less than 3,700 KW (4,958 HP) and a displacement of greater than or equal to 10 liters per cylinder and less than 15 liters per cylinder; and

(2) Their 2014 model year and later emergency stationary CI ICE with a maximum engine power less than 2,000 KW (2,682 HP) and a displacement of greater than or equal to 15 liters per cylinder and less than 30 liters per cylinder.

(g) Notwithstanding the requirements in paragraphs (a) through (d) of this section, stationary emergency CI internal combustion engines identified in paragraphs (a) and (c) may be certified to the provisions of 40 CFR part 94 or, if Table 2 to 40 CFR 1042.101 identifies Tier 3 standards as being applicable, the requirements applicable to Tier 3 engines in 40 CFR part 1042, if the engines will be used solely in either or both of the following locations:

(1) Areas of Alaska not accessible by the FAHS; and

(2) Marine offshore installations.

(h) Notwithstanding the requirements in paragraphs (a) through (f) of this section, stationary CI internal combustion engine manufacturers are not required to certify reconstructed engines; however manufacturers may elect to do so. The reconstructed engine must be certified to the emission standards specified in paragraphs (a) through (f) of this section that are applicable to the model year, maximum engine power and displacement of the reconstructed emergency stationary CI ICE.

[71 FR 39172, July 11, 2006, as amended at 76 FR 37968, June 28, 2011]

IFL is not an engine manufacturer and is therefore not subject to this section. Back to Top

§ 60.4203 How long must my engines meet the emission standards if I am a manufacturer of stationary CI internal combustion engines?

Engines manufactured by stationary CI internal combustion engine manufacturers must meet the emission standards as required in §§ 60.4201 and 60.4202 during the certified emissions life of the engines.

[76 FR 37968, June 28, 2011]

IFL is not an engine manufacturer and is therefore not subject to this section.

Back to Top

Emission Standards for Owners and Operators

Back to Top

§ 60.4204 What emission standards must I meet for non-emergency engines if I am an owner or operator of a stationary CI internal combustion engine?

(a) Owners and operators of pre-2007 model year non-emergency stationary CI ICE with a displacement of less than 10 liters per cylinder must comply with the emission standards in table 1 to this subpart. Owners and operators of pre-2007 model year non-emergency stationary CI ICE with a displacement of greater than or equal to 10 liters per cylinder and less than 30 liters per cylinder must comply with the emission standards in 40 CFR 94.8(a)(1).

(b) Owners and operators of 2007 model year and later non-emergency stationary CI ICE with a displacement of less than 30 liters per cylinder must comply with the emission standards for new CI engines in § 60.4201 for their 2007 model year and later stationary CI ICE, as applicable.

(c) Owners and operators of non-emergency stationary CI engines with a displacement of greater than or equal to 30 liters per cylinder must meet the following requirements:

(1) For engines installed prior to January 1, 2012, limit the emissions of NO_x in the stationary CI internal combustion engine exhaust to the following:

(i) 17.0 grams per kilowatt-hour (g/KW-hr) (12.7 grams per horsepower-hr (g/HP-hr)) when maximum engine speed is less than 130 revolutions per minute (rpm);

(ii) $45 \cdot n^{-0.2}$ g/KW-hr ($34 \cdot n^{-0.2}$ g/HP-hr) when maximum engine speed is 130 or more but less than 2,000 rpm, where n is maximum engine speed; and

(iii) 9.8 g/KW-hr (7.3 g/HP-hr) when maximum engine speed is 2,000 rpm or more.

(2) For engines installed on or after January 1, 2012 and before January 1, 2016, limit the emissions of NO_x in the stationary CI internal combustion engine exhaust to the following:

(i) 14.4 g/KW-hr (10.7 g/HP-hr) when maximum engine speed is less than 130 rpm;

(ii) $44 \cdot n^{-0.23}$ g/KW-hr ($33 \cdot n^{-0.23}$ g/HP-hr) when maximum engine speed is greater than or equal to 130 but less than 2,000 rpm and where n is maximum engine speed; and

(iii) 7.7 g/KW-hr (5.7 g/HP-hr) when maximum engine speed is greater than or equal to 2,000 rpm.

(3) For engines installed on or after January 1, 2016, limit the emissions of NO_x in the stationary CI internal combustion engine exhaust to the following:

(i) 3.4 g/KW-hr (2.5 g/HP-hr) when maximum engine speed is less than 130 rpm;

(ii) $9.0 \cdot n^{-0.20}$ g/KW-hr ($6.7 \cdot n^{-0.20}$ g/HP-hr) where n (maximum engine speed) is 130 or more but less than 2,000 rpm; and

(iii) 2.0 g/KW-hr (1.5 g/HP-hr) where maximum engine speed is greater than or equal to 2,000 rpm.

(4) Reduce particulate matter (PM) emissions by 60 percent or more, or limit the emissions of PM in the stationary CI internal combustion engine exhaust to 0.15 g/KW-hr (0.11 g/HP-hr).

(d) Owners and operators of non-emergency stationary CI ICE with a displacement of less than 30 liters per cylinder who conduct performance tests in-use must meet the not-to-exceed (NTE) standards as indicated in § 60.4212.

(e) Owners and operators of any modified or reconstructed non-emergency stationary CI ICE subject to this subpart must meet the emission standards applicable to the model year, maximum engine power, and displacement of the modified or reconstructed non-emergency stationary CI ICE that are specified in paragraphs (a) through (d) of this section.

[71 FR 39172, July 11, 2006, as amended at 76 FR 37968, June 28, 2011]

IFL's fire pump engine meets the definition of an emergency stationary CI ICE under 60.and is therefore not subject to any of the requirements of 60.4219.

Back to Top

§ 60.4205 What emission standards must I meet for emergency engines if I am an owner or operator of a stationary CI internal combustion engine?

(a) Owners and operators of pre-2007 model year emergency stationary CI ICE with a displacement of less than 10 liters per cylinder that are not fire pump engines must comply with the emission standards in Table 1 to this subpart. Owners and operators of pre-2007 model year emergency stationary CI ICE with a displacement of greater than or equal to 10 liters per cylinder and less than 30 liters per cylinder that are not fire pump engines must comply with the emission standards in 40 CFR 94.8(a)(1).

(b) Owners and operators of 2007 model year and later emergency stationary CI ICE with a displacement of less than 30 liters per cylinder that are not fire pump engines must comply with the emission standards for new nonroad CI engines in § 60.4202, for all pollutants, for the same model year and maximum engine power for their 2007 model year and later emergency stationary CI ICE.

(c) Owners and operators of fire pump engines with a displacement of less than 30 liters per cylinder must comply with the emission standards in table 4 to this subpart, for all pollutants.

(d) Owners and operators of emergency stationary CI engines with a displacement of greater than or equal to 30 liters per cylinder must meet the requirements in this section.

(1) For engines installed prior to January 1, 2012, limit the emissions of NO_x in the stationary CI internal combustion engine exhaust to the following:

(i) 17.0 g/KW-hr (12.7 g/HP-hr) when maximum engine speed is less than 130 rpm;

(ii) $45 \cdot n^{-0.2}$ g/KW-hr ($34 \cdot n^{-0.2}$ g/HP-hr) when maximum engine speed is 130 or more but less than 2,000 rpm, where n is maximum engine speed; and

(iii) 9.8 g/kW-hr (7.3 g/HP-hr) when maximum engine speed is 2,000 rpm or more.

(2) For engines installed on or after January 1, 2012, limit the emissions of NO_x in the stationary CI internal combustion engine exhaust to the following:

(i) 14.4 g/KW-hr (10.7 g/HP-hr) when maximum engine speed is less than 130 rpm;

(ii) $44 \cdot n^{-0.23}$ g/KW-hr ($33 \cdot n^{-0.23}$ g/HP-hr) when maximum engine speed is greater than or equal to 130 but less than 2,000 rpm and where n is maximum engine speed; and

(iii) 7.7 g/KW-hr (5.7 g/HP-hr) when maximum engine speed is greater than or equal to 2,000 rpm.

(3) Limit the emissions of PM in the stationary CI internal combustion engine exhaust to 0.40 g/KW-hr (0.30 g/HP-hr).

(e) Owners and operators of emergency stationary CI ICE with a displacement of less than 30 liters per cylinder who conduct performance tests in-use must meet the NTE standards as indicated in § 60.4212.

(f) Owners and operators of any modified or reconstructed emergency stationary CI ICE subject to this subpart must meet the emission standards applicable to the model year, maximum engine power, and displacement of the modified or reconstructed CI ICE that are specified in paragraphs (a) through (e) of this section.

[71 FR 39172, July 11, 2006, as amended at 76 FR 37969, June 28, 2011]

IFL operates an engine that meets the definition of an emergency stationary CI ICE which is a fire pump, with displacement of less than 30 liters per cylinder. As such, it is required to meet the emission standards in Table 4 of this subpart. IFL has complied with this requirement by purchasing an engine certified to meet those standards.

Back to Top

§ 60.4206 How long must I meet the emission standards if I am an owner or operator of a stationary CI internal combustion engine?

Owners and operators of stationary CI ICE must operate and maintain stationary CI ICE that achieve the emission standards as required in §§ 60.4204 and 60.4205 over the entire life of the engine.

[76 FR 37969, June 28, 2011]

IFL is required to meet the emission standards as defined in 60.4205 and will meet those emission standards for the entire life of the engine.

Back to Top

Fuel Requirements for Owners and Operators

Back to Top

§ 60.4207 What fuel requirements must I meet if I am an owner or operator of a stationary CI internal combustion engine subject to this subpart?

Link to an amendment published at 78 FR 6695, Jan. 30, 2013.

(a) Beginning October 1, 2007, owners and operators of stationary CI ICE subject to this subpart that use diesel fuel must use diesel fuel that meets the requirements of 40 CFR 80.510(a).

(b) Beginning October 1, 2010, owners and operators of stationary CI ICE subject to this subpart with a displacement of less than 30 liters per cylinder that use diesel fuel must purchase only diesel fuel that meets the requirements of 40 CFR 80.510(b) for nonroad diesel fuel.

(c) [Reserved]

(d) Beginning June 1, 2012, owners and operators of stationary CI ICE subject to this subpart with a displacement of greater than or equal to 30 liters per cylinder are no longer subject to the requirements of paragraph (a) of this section, and must use fuel that meets a maximum per-gallon sulfur content of 1,000 parts per million (ppm).

(e) Stationary CI ICE that have a national security exemption under § 60.4200(d) are also exempt from the fuel requirements in this section.

[71 FR 39172, July 11, 2006, as amended at 76 FR 37969, June 28, 2011]

IFL is subject to and will comply with the diesel fuel requirements highlighted above. IFL will comply with the requirements by purchasing and using only fuel that meets the standards of 40 CFR 80.510(b). Title 40 CFR 80.510(b) requires fuel to contain no more than 15 ppm sulfur and has a maximum cetane index of less than 40 or has a maximum aromatic content of 35 volume percent.

Back to Top

Other Requirements for Owners and Operators

Back to Top

§ 60.4208 What is the deadline for importing or installing stationary CI ICE produced in previous model years?

(a) After December 31, 2008, owners and operators may not install stationary CI ICE (excluding fire pump engines) that do not meet the applicable requirements for 2007 model year engines.

(b) After December 31, 2009, owners and operators may not install stationary CI ICE with a maximum engine power of less than 19 KW (25 HP) (excluding fire pump engines) that do not meet the applicable requirements for 2008 model year engines.

(c) After December 31, 2014, owners and operators may not install non-emergency stationary CI ICE with a maximum engine power of greater than or equal to 19 KW (25 HP) and less than 56 KW (75 HP) that do not meet the applicable requirements for 2013 model year non-emergency engines.

(d) After December 31, 2013, owners and operators may not install non-emergency stationary CI ICE with a maximum engine power of greater than or equal to 56 KW (75 HP) and less than 130 KW (175 HP) that do not meet the applicable requirements for 2012 model year non-emergency engines.

(e) After December 31, 2012, owners and operators may not install non-emergency stationary CI ICE with a maximum engine power of greater than or equal to 130 KW (175 HP), including those above 560 KW (750 HP), that do not meet the applicable requirements for 2011 model year non-emergency engines.

(f) After December 31, 2016, owners and operators may not install non-emergency stationary CI ICE with a maximum engine power of greater than or equal to 560 KW (750 HP) that do not meet the applicable requirements for 2015 model year non-emergency engines.

(g) After December 31, 2018, owners and operators may not install non-emergency stationary CI ICE with a maximum engine power greater than or equal to 600 KW (804 HP) and less than 2,000 KW (2,680 HP) and a displacement of greater than or equal to 10 liters per cylinder and less than 30 liters per cylinder that do not meet the applicable requirements for 2017 model year non-emergency engines.

(h) In addition to the requirements specified in §§ 60.4201, 60.4202, 60.4204, and 60.4205, it is prohibited to import stationary CI ICE with a displacement of less than 30 liters per cylinder that do not meet the applicable requirements specified in paragraphs (a) through (g) of this section after the dates specified in paragraphs (a) through (g) of this section.

(i) The requirements of this section do not apply to owners or operators of stationary CI ICE that have been modified, reconstructed, and do not apply to engines that were removed from one existing location and reinstalled at a new location.

The fire pump engine at IFL is not directly subject to the requirements of 40.4208, but IFL will not violate any of the requirements of this section.

[71 FR 39172, July 11, 2006, as amended at 76 FR 37969, June 28, 2011]

Back to Top

§ 60.4209 What are the monitoring requirements if I am an owner or operator of a stationary CI internal combustion engine?

If you are an owner or operator, you must meet the monitoring requirements of this section. In addition, you must also meet the monitoring requirements specified in § 60.4211.

(a) If you are an owner or operator of an emergency stationary CI internal combustion engine that does not meet the standards applicable to non-emergency engines, you must install a non-resettable hour meter prior to startup of the engine.

(b) If you are an owner or operator of a stationary CI internal combustion engine equipped with a diesel particulate filter to comply with the emission standards in § 60.4204, the diesel particulate filter must be installed with a backpressure monitor that notifies the owner or operator when the high backpressure limit of the engine is approached.

[71 FR 39172, July 11, 2006, as amended at 76 FR 37969, June 28, 2011]

IFL is subject to the requirement to install a non-resettable hour meter and has complied with this requirement by having a non-resettable hour meter installed on the engine.

Back to Top

Compliance Requirements

Back to Top

§ 60.4210 What are my compliance requirements if I am a stationary CI internal combustion engine manufacturer?

(a) Stationary CI internal combustion engine manufacturers must certify their stationary CI ICE with a displacement of less than 10 liters per cylinder to the emission standards specified in § 60.4201(a) through (c) and § 60.4202(a), (b) and (d) using the certification procedures required in 40 CFR part 89, subpart B, or 40 CFR part 1039, subpart C, as applicable, and must test their engines as specified in those parts. For the purposes of this subpart, engines certified to the standards in table 1 to this subpart shall be subject to the same requirements as engines certified to the standards in 40 CFR part 89. For the purposes of this subpart, engines certified to the standards in table 4 to this subpart shall be subject to the same requirements as engines certified to the standards in 40 CFR part 89, except that engines with NFPA nameplate power of less than 37 KW (50 HP) certified to model year 2011 or later standards shall be subject to the same requirements as engines certified to the standards in 40 CFR part 1039.

(b) Stationary CI internal combustion engine manufacturers must certify their stationary CI ICE with a displacement of greater than or equal to 10 liters per cylinder and less than 30 liters per cylinder to the emission standards specified in § 60.4201(d) and (e) and § 60.4202(e) and (f) using the certification procedures required in 40 CFR part 94, subpart C, or 40 CFR part 1042, subpart C, as applicable, and must test their engines as specified in 40 CFR part 94 or 1042, as applicable.

(c) Stationary CI internal combustion engine manufacturers must meet the requirements of 40 CFR 1039.120, 1039.125, 1039.130, and 1039.135, and 40 CFR part 1068 for engines that are certified to the emission standards in 40 CFR part 1039. Stationary CI internal combustion engine manufacturers must meet the corresponding provisions of 40 CFR part 89, 40 CFR part 94 or 40 CFR part 1042 for engines that would be covered by that part if they were nonroad (including marine) engines. Labels on such engines must refer to stationary engines, rather than or in addition to nonroad or marine engines, as appropriate. Stationary CI internal combustion engine manufacturers must label their engines according to paragraphs (c)(1) through (3) of this section.

(1) Stationary CI internal combustion engines manufactured from January 1, 2006 to March 31, 2006 (January 1, 2006 to June 30, 2006 for fire pump engines), other than those that are part of certified engine families under the nonroad CI engine regulations, must be labeled according to 40 CFR 1039.20.

(2) Stationary CI internal combustion engines manufactured from April 1, 2006 to December 31, 2006 (or, for fire pump engines, July 1, 2006 to December 31 of the year preceding the year listed in table 3 to this subpart) must be labeled according to paragraphs (c)(2)(i) through (iii) of this section:

(i) Stationary CI internal combustion engines that are part of certified engine families under the nonroad regulations must meet the labeling requirements for nonroad CI engines, but do not have to meet the labeling requirements in 40 CFR 1039.20.

(ii) Stationary CI internal combustion engines that meet Tier 1 requirements (or requirements for fire pumps) under this subpart, but do not meet the requirements applicable to nonroad CI engines must be labeled according to 40 CFR 1039.20. The engine manufacturer may add language to the label clarifying that the engine meets Tier 1 requirements (or requirements for fire pumps) of this subpart.

(iii) Stationary CI internal combustion engines manufactured after April 1, 2006 that do not meet Tier 1 requirements of this subpart, or fire pumps engines manufactured after July 1, 2006 that do not meet the requirements for fire pumps under this subpart, may not be used in the U.S. If any such engines are manufactured in the U.S. after April 1, 2006 (July 1, 2006 for fire pump engines), they must be exported or must be brought into compliance with the appropriate standards prior to initial operation. The export provisions of 40 CFR 1068.230 would apply to engines for export and the manufacturers must label such engines according to 40 CFR 1068.230.

(3) Stationary CI internal combustion engines manufactured after January 1, 2007 (for fire pump engines, after January 1 of the year listed in table 3 to this subpart, as applicable) must be labeled according to paragraphs (c)(3)(i) through (iii) of this section.

(i) Stationary CI internal combustion engines that meet the requirements of this subpart and the corresponding requirements for nonroad (including marine) engines of the same model year and HP must be labeled according to the provisions in 40 CFR parts 89, 94, 1039 or 1042, as appropriate.

(ii) Stationary CI internal combustion engines that meet the requirements of this subpart, but are not certified to the standards applicable to nonroad (including marine) engines of the same model year and HP must be labeled according to the provisions in 40 CFR parts 89, 94, 1039 or 1042, as appropriate, but the words “stationary” must be included instead of “nonroad” or “marine” on the label. In addition, such engines must be labeled according to 40 CFR 1039.20.

(iii) Stationary CI internal combustion engines that do not meet the requirements of this subpart must be labeled according to 40 CFR 1068.230 and must be exported under the provisions of 40 CFR 1068.230.

(d) An engine manufacturer certifying an engine family or families to standards under this subpart that are identical to standards applicable under 40 CFR parts 89, 94, 1039 or 1042 for that model year may certify any such family that contains both nonroad (including marine) and stationary engines as a single engine family and/or may include any such family containing stationary engines in the averaging, banking and trading provisions applicable for such engines under those parts.

(e) Manufacturers of engine families discussed in paragraph (d) of this section may meet the labeling requirements referred to in paragraph (c) of this section for stationary CI ICE by either adding a separate label containing the information required in paragraph (c) of this section or by adding the words “and stationary” after the word “nonroad” or “marine,” as appropriate, to the label.

(f) Starting with the model years shown in table 5 to this subpart, stationary CI internal combustion engine manufacturers must add a permanent label stating that the engine is for stationary emergency use only to each new emergency stationary CI internal combustion engine greater than or equal to 19 KW (25 HP) that meets all the emission standards for emergency engines in § 60.4202 but does not meet all the emission standards for non-emergency engines in § 60.4201. The label must be added according to the labeling requirements specified in 40 CFR 1039.135(b). Engine manufacturers must specify in the owner's manual that operation of emergency engines is limited to emergency operations and required maintenance and testing.

(g) Manufacturers of fire pump engines may use the test cycle in table 6 to this subpart for testing fire pump engines and may test at the NFPA certified nameplate HP, provided that the engine is labeled as “Fire Pump Applications Only”.

(h) Engine manufacturers, including importers, may introduce into commerce uncertified engines or engines certified to earlier standards that were manufactured before the new or changed standards took effect until inventories are depleted, as long as such engines are part of normal inventory. For example, if the engine manufacturers' normal industry practice is to keep on hand a one-month supply of engines based on its projected sales, and a new tier of standards starts to apply for the 2009 model year, the engine manufacturer may manufacture engines based on the normal inventory requirements late in the 2008 model year, and sell those engines for installation. The engine manufacturer may not circumvent the provisions of §§ 60.4201 or 60.4202 by stockpiling engines that are built before new or changed standards take effect. Stockpiling of such engines beyond normal industry practice is a violation of this subpart.

(i) The replacement engine provisions of 40 CFR 89.1003(b)(7), 40 CFR 94.1103(b)(3), 40 CFR 94.1103(b)(4) and 40 CFR 1068.240 are applicable to stationary CI engines replacing existing equipment that is less than 15 years old.

IFL is not an engine manufacturer and is therefore not subject to this section.

[71 FR 39172, July 11, 2006, as amended at 76 FR 37969, June 28, 2011]

Back to Top

§ 60.4211 What are my compliance requirements if I am an owner or operator of a stationary CI internal combustion engine?

Link to an amendment published at 78 FR 6695, Jan. 30, 2013.

(a) If you are an owner or operator and must comply with the emission standards specified in this subpart, you must do all of the following, except as permitted under paragraph (g) of this section:

(1) Operate and maintain the stationary CI internal combustion engine and control device according to the manufacturer's emission-related written instructions;

(2) Change only those emission-related settings that are permitted by the manufacturer; and

(3) Meet the requirements of 40 CFR parts 89, 94 and/or 1068, as they apply to you.

IFL must comply with the emission standards of 40 CFR 60.4205(b) and will follow all requirements and instructions for the fire pump engine as required by the manufacturer.

(b) If you are an owner or operator of a pre-2007 model year stationary CI internal combustion engine and must comply with the emission standards specified in §§ 60.4204(a) or 60.4205(a), or if you are an owner or operator of a CI fire pump engine that is manufactured prior to the model years in table 3 to this subpart and must comply with the emission standards specified in § 60.4205(c), you must demonstrate compliance according to one of the methods specified in paragraphs (b)(1) through (5) of this section.

(1) Purchasing an engine certified according to 40 CFR part 89 or 40 CFR part 94, as applicable, for the same model year and maximum engine power. The engine must be installed and configured according to the manufacturer's specifications.

(2) Keeping records of performance test results for each pollutant for a test conducted on a similar engine. The test must have been conducted using the same methods specified in this subpart and these methods must have been followed correctly.

(3) Keeping records of engine manufacturer data indicating compliance with the standards.

(4) Keeping records of control device vendor data indicating compliance with the standards.

(5) Conducting an initial performance test to demonstrate compliance with the emission standards according to the requirements specified in § 60.4212, as applicable.

(c) If you are an owner or operator of a 2007 model year and later stationary CI internal combustion engine and must comply with the emission standards specified in § 60.4204(b) or § 60.4205(b), or if you are an owner or operator of a CI fire pump engine that is manufactured during or after the model year that applies to your fire pump engine power rating in table 3 to this subpart and must comply with the emission standards specified in § 60.4205(c), you must comply by purchasing an engine certified to the emission standards in § 60.4204(b), or § 60.4205(b) or (c), as applicable, for the same model year and maximum (or in the case of fire pumps, NFPA nameplate) engine power. The engine must be installed and configured according to the manufacturer's emission-related specifications, except as permitted in paragraph (g) of this section.

IFL has purchased a fire pump engine certified to meet the emission standards provided in 60.4205(b). IFL will install, configure and operate the fire pump engine according to the manufacturer's emission-related specifications.

(d) If you are an owner or operator and must comply with the emission standards specified in § 60.4204(c) or § 60.4205(d), you must demonstrate compliance according to the requirements specified in paragraphs (d)(1) through (3) of this section.

(1) Conducting an initial performance test to demonstrate initial compliance with the emission standards as specified in § 60.4213.

(2) Establishing operating parameters to be monitored continuously to ensure the stationary internal combustion engine continues to meet the emission standards. The owner or operator must petition the Administrator for approval of operating parameters to be monitored continuously. The petition must include the information described in paragraphs (d)(2)(i) through (v) of this section.

(i) Identification of the specific parameters you propose to monitor continuously;

(ii) A discussion of the relationship between these parameters and NO_x and PM emissions, identifying how the emissions of these pollutants change with changes in these parameters, and how limitations on these parameters will serve to limit NO_x and PM emissions;

(iii) A discussion of how you will establish the upper and/or lower values for these parameters which will establish the limits on these parameters in the operating limitations;

(iv) A discussion identifying the methods and the instruments you will use to monitor these parameters, as well as the relative accuracy and precision of these methods and instruments; and

(v) A discussion identifying the frequency and methods for recalibrating the instruments you will use for monitoring these parameters.

(3) For non-emergency engines with a displacement of greater than or equal to 30 liters per cylinder, conducting annual performance tests to demonstrate continuous compliance with the emission standards as specified in § 60.4213.

(e) If you are an owner or operator of a modified or reconstructed stationary CI internal combustion engine and must comply with the emission standards specified in § 60.4204(e) or § 60.4205(f), you must demonstrate compliance according to one of the methods specified in paragraphs (e)(1) or (2) of this section.

(1) Purchasing, or otherwise owning or operating, an engine certified to the emission standards in § 60.4204(e) or § 60.4205(f), as applicable.

(2) Conducting a performance test to demonstrate initial compliance with the emission standards according to the requirements specified in § 60.4212 or § 60.4213, as appropriate. The test must be conducted within 60 days after the engine commences operation after the modification or reconstruction.

(f) Emergency stationary ICE may be operated for the purpose of maintenance checks and readiness testing, provided that the tests are recommended by Federal, State or local government, the manufacturer, the vendor, or the insurance company associated with the engine. Maintenance checks and readiness testing of such units is limited to 100 hours per year. There is no time limit on the use of emergency stationary ICE in emergency situations. The owner or operator may petition the Administrator for approval of additional hours to be used for maintenance checks and readiness testing, but a petition is not required if the owner or operator maintains records indicating that Federal, State, or local standards require maintenance and testing of emergency ICE beyond 100 hours per year. Emergency stationary ICE may operate up to 50 hours per year in non-emergency situations, but those 50 hours are counted towards the 100 hours per year provided for maintenance and testing. The 50 hours per year for non-emergency situations cannot be used for peak shaving or to generate income for a facility to supply power to an electric grid or otherwise supply non-emergency power as part of a financial arrangement with another entity. For owners and operators of emergency engines, any operation other than emergency operation, maintenance and testing, and operation in non-emergency situations for 50 hours per year, as permitted in this section, is prohibited.

IFL's fire pump engine is considered an emergency engine and is subject to the operational limitations as described in the paragraph above. IFL will not exceed the limitations as listed and will track the hours of operation of the fire pump in order to ensure compliance with these requirements.

(g) If you do not install, configure, operate, and maintain your engine and control device according to the manufacturer's emission-related written instructions, or you change emission-related settings in a way that is not permitted by the manufacturer, you must demonstrate compliance as follows:

(1) If you are an owner or operator of a stationary CI internal combustion engine with maximum engine power less than 100 HP, you must keep a maintenance plan and records of conducted maintenance to demonstrate compliance and must, to the extent practicable, maintain and operate the engine in a manner consistent with good air pollution control practice for minimizing emissions. In addition, if you do not install and configure the engine and control device according to the manufacturer's emission-related written instructions, or you change the emission-related settings in a way that is not permitted by the manufacturer, you must conduct an initial performance test to demonstrate compliance with the applicable emission standards within 1 year of such action.

(2) If you are an owner or operator of a stationary CI internal combustion engine greater than or equal to 100 HP and less than or equal to 500 HP, you must keep a maintenance plan and records of conducted maintenance and must, to the extent practicable, maintain and operate the engine in a manner consistent with good air pollution control practice for minimizing emissions. In addition, you must conduct an initial performance test to demonstrate compliance with the applicable emission standards within 1 year of startup, or within 1 year after an engine and control device is no longer installed, configured, operated, and maintained in accordance with the manufacturer's emission-related written instructions, or within 1 year after you change emission-related settings in a way that is not permitted by the manufacturer.

(3) If you are an owner or operator of a stationary CI internal combustion engine greater than 500 HP, you must keep a maintenance plan and records of conducted maintenance and must, to the extent practicable, maintain and operate the engine in a manner consistent with good air pollution control practice for minimizing emissions. In addition, you must conduct an initial performance test to demonstrate compliance with the applicable emission standards within 1 year of startup, or within 1 year after an engine and control device is no longer installed, configured, operated, and maintained in accordance with the manufacturer's emission-related written instructions, or within 1 year after you change emission-related settings in a way that is not permitted by the manufacturer. You must conduct subsequent performance testing every 8,760 hours of engine operation or 3 years, whichever comes first, thereafter to demonstrate compliance with the applicable emission standards.

[71 FR 39172, July 11, 2006, as amended at 76 FR 37970, June 28, 2011]

Back to Top

Testing Requirements for Owners and Operators

Back to Top

§ 60.4212 What test methods and other procedures must I use if I am an owner or operator of a stationary CI internal combustion engine with a displacement of less than 30 liters per cylinder?

Owners and operators of stationary CI ICE with a displacement of less than 30 liters per cylinder who conduct performance tests pursuant to this subpart must do so according to paragraphs (a) through (e) of this section.

(a) The performance test must be conducted according to the in-use testing procedures in 40 CFR part 1039, subpart F, for stationary CI ICE with a displacement of less than 10 liters per cylinder, and according to 40 CFR part 1042, subpart F, for stationary CI ICE with a displacement of greater than or equal to 10 liters per cylinder and less than 30 liters per cylinder.

(b) Exhaust emissions from stationary CI ICE that are complying with the emission standards for new CI engines in 40 CFR part 1039 must not exceed the not-to-exceed (NTE) standards for the same model year and maximum engine power as required in 40 CFR 1039.101(e) and 40 CFR 1039.102(g)(1), except as specified in 40 CFR 1039.104(d). This requirement starts when NTE requirements take effect for nonroad diesel engines under 40 CFR part 1039.

(c) Exhaust emissions from stationary CI ICE that are complying with the emission standards for new CI engines in 40 CFR 89.112 or 40 CFR 94.8, as applicable, must not exceed the NTE numerical requirements, rounded to the same number of decimal places as the applicable standard in 40 CFR 89.112 or 40 CFR 94.8, as applicable, determined from the following equation:

$$\text{NTE requirement for each pollutant} = (1.25) \times (\text{STD}) \qquad \text{(Eq. 1)}$$

Where:

STD = The standard specified for that pollutant in 40 CFR 89.112 or 40 CFR 94.8, as applicable.

Alternatively, stationary CI ICE that are complying with the emission standards for new CI engines in 40 CFR 89.112 or 40 CFR 94.8 may follow the testing procedures specified in § 60.4213 of this subpart, as appropriate.

(d) Exhaust emissions from stationary CI ICE that are complying with the emission standards for pre-2007 model year engines in § 60.4204(a), § 60.4205(a), or § 60.4205(c) must not exceed the NTE numerical requirements, rounded to the same number of decimal places as the applicable standard in § 60.4204(a), § 60.4205(a), or § 60.4205(c), determined from the equation in paragraph (c) of this section.

Where:

STD = The standard specified for that pollutant in § 60.4204(a), § 60.4205(a), or § 60.4205(c).

Alternatively, stationary CI ICE that are complying with the emission standards for pre-2007 model year engines in § 60.4204(a), § 60.4205(a), or § 60.4205(c) may follow the testing procedures specified in § 60.4213, as appropriate.

(e) Exhaust emissions from stationary CI ICE that are complying with the emission standards for new CI engines in 40 CFR part 1042 must not exceed the NTE standards for the same model year and maximum engine power as required in 40 CFR 1042.101(c).

Performance testing is not required on IFL's fire pump engine. The requirements of performance testing are not applicable.

[71 FR 39172, July 11, 2006, as amended at 76 FR 37971, June 28, 2011]

Back to Top

§ 60.4213 What test methods and other procedures must I use if I am an owner or operator of a stationary CI internal combustion engine with a displacement of greater than or equal to 30 liters per cylinder?

Owners and operators of stationary CI ICE with a displacement of greater than or equal to 30 liters per cylinder must conduct performance tests according to paragraphs (a) through (f) of this section.

(a) Each performance test must be conducted according to the requirements in § 60.8 and under the specific conditions that this subpart specifies in table 7. The test must be conducted within 10 percent of 100 percent peak (or the highest achievable) load.

(b) You may not conduct performance tests during periods of startup, shutdown, or malfunction, as specified in § 60.8(c).

(c) You must conduct three separate test runs for each performance test required in this section, as specified in § 60.8(f). Each test run must last at least 1 hour.

(d) To determine compliance with the percent reduction requirement, you must follow the requirements as specified in paragraphs (d)(1) through (3) of this section.

(1) You must use Equation 2 of this section to determine compliance with the percent reduction requirement:

$$\frac{C_i - C_o}{C_i} \times 100 = R \qquad \text{(Eq. 2)}$$

Where:

C_i = concentration of NO_x or PM at the control device inlet,

C_o = concentration of NO_x or PM at the control device outlet, and

R = percent reduction of NO_x or PM emissions.

(2) You must normalize the NO_x or PM concentrations at the inlet and outlet of the control device to a dry basis and to 15 percent oxygen (O_2) using Equation 3 of this section, or an equivalent percent carbon dioxide (CO_2) using the procedures described in paragraph (d)(3) of this section.

$$C_{adj} = C_d \frac{5.9}{20.9 - \% O_2} \qquad \text{(Eq. 3)}$$

Where:

C_{adj} = Calculated NO_x or PM concentration adjusted to 15 percent O_2 .

C_d = Measured concentration of NO_x or PM, uncorrected.

5.9 = 20.9 percent O_2 –15 percent O_2 , the defined O_2 correction value, percent.

$\%O_2$ = Measured O_2 concentration, dry basis, percent.

(3) If pollutant concentrations are to be corrected to 15 percent O_2 and CO_2 concentration is measured in lieu of O_2concentration measurement, a CO_2 correction factor is needed. Calculate the CO_2 correction factor as described in paragraphs (d)(3)(i) through (iii) of this section.

(i) Calculate the fuel-specific F_o value for the fuel burned during the test using values obtained from Method 19, Section 5.2, and the following equation:

$$F_o = \frac{0.209 F_d}{F_c} \qquad \text{(Eq. 4)}$$

Where:

F_o = Fuel factor based on the ratio of O_2 volume to the ultimate CO_2 volume produced by the fuel at zero percent excess air.

0.209 = Fraction of air that is O_2 , percent/100.

F_d = Ratio of the volume of dry effluent gas to the gross calorific value of the fuel from Method 19, dsm^3 /J (dscf/10^6 Btu).

F_c = Ratio of the volume of CO_2 produced to the gross calorific value of the fuel from Method 19, dsm^3 /J (dscf/10^6 Btu).

(ii) Calculate the CO_2 correction factor for correcting measurement data to 15 percent O_2 , as follows:

$$X_{CO_2} = \frac{5.9}{F_o} \qquad \text{(Eq. 5)}$$

Where:

X_{CO2} = CO_2 correction factor, percent.

5.9 = 20.9 percent O_2 –15 percent O_2 , the defined O_2 correction value, percent.

(iii) Calculate the NO_x and PM gas concentrations adjusted to 15 percent O_2 using CO_2 as follows:

$$C_{adj} = C_d \frac{X_{CO_2}}{\%CO_2} \qquad \text{(Eq. 6)}$$

Where:

C_{adj} = Calculated NO_x or PM concentration adjusted to 15 percent O_2 .

C_d = Measured concentration of NO_x or PM, uncorrected.

$\%CO_2$ = Measured CO_2 concentration, dry basis, percent.

(e) To determine compliance with the NO_x mass per unit output emission limitation, convert the concentration of NO_x in the engine exhaust using Equation 7 of this section:

$$ER = \frac{C_d \times 1.912 \times 10^{-3} \times Q \times T}{\text{KW-hour}} \qquad \text{(Eq. 7)}$$

Where:

ER = Emission rate in grams per KW-hour.

C_d = Measured NO_x concentration in ppm.

1.912×10^{-3} = Conversion constant for ppm NO_x to grams per standard cubic meter at 25 degrees Celsius.

Q = Stack gas volumetric flow rate, in standard cubic meter per hour.

T = Time of test run, in hours.

KW-hour = Brake work of the engine, in KW-hour.

(f) To determine compliance with the PM mass per unit output emission limitation, convert the concentration of PM in the engine exhaust using Equation 8 of this section:

$$ER = \frac{C_{adj} \times Q \times T}{\text{KW-hour}} \qquad \text{(Eq. 8)}$$

Where:

ER = Emission rate in grams per KW-hour.

C_{adj} = Calculated PM concentration in grams per standard cubic meter.

Q = Stack gas volumetric flow rate, in standard cubic meter per hour.

T = Time of test run, in hours.

KW-hour = Energy output of the engine, in KW.

[71 FR 39172, July 11, 2006, as amended at 76 FR 37971, June 28, 2011]

Back to Top

Performance testing is not required on IFL's fire pump engine. The requirements of performance testing are not applicable.

Notification, Reports, and Records for Owners and Operators

Back to Top

§ 60.4214 What are my notification, reporting, and recordkeeping requirements if

Link to an amendment published at 78 FR 6696, Jan. 30, 2013.

(a) Owners and operators of non-emergency stationary CI ICE that are greater than 2,237 KW (3,000 HP), or have a displacement of greater than or equal to 10 liters per cylinder, or are pre-2007 model year engines that are greater than 130 KW (175 HP) and not certified, must meet the requirements of paragraphs (a)(1) and (2) of this section.

(1) Submit an initial notification as required in § 60.7(a)(1). The notification must include the information in paragraphs (a)(1)(i) through (v) of this section.

(i) Name and address of the owner or operator;

(ii) The address of the affected source;

(iii) Engine information including make, model, engine family, serial number, model year, maximum engine power, and engine displacement;

(iv) Emission control equipment; and

(v) Fuel used.

(2) Keep records of the information in paragraphs (a)(2)(i) through (iv) of this section.

(i) All notifications submitted to comply with this subpart and all documentation supporting any notification.

(ii) Maintenance conducted on the engine.

(iii) If the stationary CI internal combustion is a certified engine, documentation from the manufacturer that the engine is certified to meet the emission standards.

(iv) If the stationary CI internal combustion is not a certified engine, documentation that the engine meets the emission standards.

(b) If the stationary CI internal combustion engine is an emergency stationary internal combustion engine, the owner or operator is not required to submit an initial notification. Starting with the model years in table 5 to this subpart, if the emergency engine does not meet the standards applicable to non-emergency engines in the applicable model year, the owner or operator must keep records of the operation of the engine in emergency and non-emergency service that are recorded through the non-resettable hour meter. The owner must record the time of operation of the engine and the reason the engine was in operation during that time.

(c) If the stationary CI internal combustion engine is equipped with a diesel particulate filter, the owner or operator must keep records of any corrective action taken after the backpressure monitor has notified the owner or operator that the high backpressure limit of the engine is approached.

IFL's fire pump engine is classified as an emergency stationary internal combustion engine. As stated in 60.4214(b) above, IFL is not required to submit an initial notification. IFL will keep records of the both the time of and reason for operation of the fire pump engine in both emergency and non-emergency service that are recorded through the non-resettable hour meter installed on the engine.

Back to Top

Special Requirements

Back to Top

§ 60.4215 What requirements must I meet for engines used in Guam, American Samoa, or the Commonwealth of the Northern Mariana Islands?

(a) Stationary CI ICE with a displacement of less than 30 liters per cylinder that are used in Guam, American Samoa, or the Commonwealth of the Northern Mariana Islands are required to meet the applicable emission standards in §§ 60.4202 and 60.4205.

(b) Stationary CI ICE that are used in Guam, American Samoa, or the Commonwealth of the Northern Mariana Islands are not required to meet the fuel requirements in § 60.4207.

(c) Stationary CI ICE with a displacement of greater than or equal to 30 liters per cylinder that are used in Guam, American Samoa, or the Commonwealth of the Northern Mariana Islands are required to meet the following emission standards:

(1) For engines installed prior to January 1, 2012, limit the emissions of NO_x in the stationary CI internal combustion engine exhaust to the following:

(i) 17.0 g/KW-hr (12.7 g/HP-hr) when maximum engine speed is less than 130 rpm;

(ii) $45 \cdot n^{-0.2}$ g/KW-hr ($34 \cdot n^{-0.2}$ g/HP-hr) when maximum engine speed is 130 or more but less than 2,000 rpm, where n is maximum engine speed; and

(iii) 9.8 g/KW-hr (7.3 g/HP-hr) when maximum engine speed is 2,000 rpm or more.

(2) For engines installed on or after January 1, 2012, limit the emissions of NO_x in the stationary CI internal combustion engine exhaust to the following:

(i) 14.4 g/KW-hr (10.7 g/HP-hr) when maximum engine speed is less than 130 rpm;

(ii) $44 \cdot n^{-0.23}$ g/KW-hr ($33 \cdot n^{-0.23}$ g/HP-hr) when maximum engine speed is greater than or equal to 130 but less than 2,000 rpm and where n is maximum engine speed; and

(iii) 7.7 g/KW-hr (5.7 g/HP-hr) when maximum engine speed is greater than or equal to 2,000 rpm.

(3) Limit the emissions of PM in the stationary CI internal combustion engine exhaust to 0.40 g/KW-hr (0.30 g/HP-hr).

[71 FR 39172, July 11, 2006, as amended at 76 FR 37971, June 28, 2011]

IFL does not own or operate any engines in the areas listed above. This section does not apply.

Back to Top

§ 60.4216 What requirements must I meet for engines used in Alaska?

(a) Prior to December 1, 2010, owners and operators of stationary CI ICE with a displacement of less than 30 liters per cylinder located in areas of Alaska not accessible by the FAHS should refer to 40 CFR part 69 to determine the diesel fuel requirements applicable to such engines.

(b) Except as indicated in paragraph (c) of this section, manufacturers, owners and operators of stationary CI ICE with a displacement of less than 10 liters per cylinder located in areas of Alaska not accessible by the FAHS may meet the requirements of this subpart by manufacturing and installing engines meeting the requirements of 40 CFR parts 94 or 1042, as appropriate, rather than the otherwise applicable requirements of 40 CFR parts 89 and 1039, as indicated in sections §§ 60.4201(f) and 60.4202(g) of this subpart.

(c) Manufacturers, owners and operators of stationary CI ICE that are located in areas of Alaska not accessible by the FAHS may choose to meet the applicable emission standards for emergency engines in § 60.4202 and § 60.4205, and not those for non-emergency engines in § 60.4201 and § 60.4204, except that for 2014 model year and later non-emergency CI ICE, the owner or operator of any such engine that was not certified as meeting Tier 4 PM standards, must meet the applicable requirements for PM in § 60.4201 and § 60.4204 or install a PM emission control device that achieves PM emission reductions of 85 percent, or 60 percent for engines with a displacement of greater than or equal to 30 liters per cylinder, compared to engine-out emissions.

(d) The provisions of § 60.4207 do not apply to owners and operators of pre-2014 model year stationary CI ICE subject to this subpart that are located in areas of Alaska not accessible by the FAHS.

(e) The provisions of § 60.4208(a) do not apply to owners and operators of stationary CI ICE subject to this subpart that are located in areas of Alaska not accessible by the FAHS until after December 31, 2009.

(f) The provisions of this section and § 60.4207 do not prevent owners and operators of stationary CI ICE subject to this subpart that are located in areas of Alaska not accessible by the FAHS from using fuels mixed with used lubricating oil, in volumes of up to 1.75 percent of the total fuel. The sulfur content of the used lubricating oil must be less than 200 parts per million. The used lubricating oil must meet the on-specification levels and properties for used oil in 40 CFR 279.11.

IFL does not own or operate any engines in the area listed above. This section does not apply.

[76 FR 37971, June 28, 2011]

Back to Top

§ 60.4217 What emission standards must I meet if I am an owner or operator of a stationary internal combustion engine using special fuels?

Owners and operators of stationary CI ICE that do not use diesel fuel may petition the Administrator for approval of alternative emission standards, if they can demonstrate that they use a fuel that is not the fuel on which the manufacturer of the engine certified the engine and that the engine cannot meet the applicable standards required in § 60.4204 or § 60.4205 using such fuels and that use of such fuel is appropriate and reasonably necessary, considering cost, energy, technical feasibility, human health and environmental, and other factors, for the operation of the engine.

[76 FR 37972, June 28, 2011]

IFL will not be using special fuels. This section does not apply.

Back to Top

General Provisions

Back to Top

§ 60.4218 What parts of the General Provisions apply to me?

Table 8 to this subpart shows which parts of the General Provisions in §§ 60.1 through 60.19 apply to you.

IFL understands that sections of the general provisions of Part 60 apply to them as listed in Table 8. IFL will comply with any requirements listed in these sections.

DEFINITIONS

Back to Top

§ 60.4219 What definitions apply to this subpart?

Link to an amendment published at 78 FR 6696, Jan. 30, 2013.

As used in this subpart, all terms not defined herein shall have the meaning given them in the CAA and in subpart A of this part.

Certified emissions life means the period during which the engine is designed to properly function in terms of reliability and fuel consumption, without being remanufactured, specified as a number of hours of operation or calendar years, whichever comes first. The values for certified emissions life for stationary CI ICE with a displacement of less than 10 liters per cylinder are given in 40 CFR 1039.101(g). The values for certified emissions life for stationary CI ICE with a displacement of greater than or equal to 10 liters per cylinder and less than 30 liters per cylinder are given in 40 CFR 94.9(a).

Combustion turbine means all equipment, including but not limited to the turbine, the fuel, air, lubrication and exhaust gas systems, control systems (except emissions control equipment), and any ancillary components and sub-components comprising any simple cycle combustion turbine, any regenerative/recuperative cycle combustion turbine, the combustion turbine portion of any cogeneration cycle combustion system, or the combustion turbine portion of any combined cycle steam/electric generating system.

Compression ignition means relating to a type of stationary internal combustion engine that is not a spark ignition engine.

Date of manufacture means one of the following things:

(1) For freshly manufactured engines and modified engines, date of manufacture means the date the engine is originally produced.

(2) For reconstructed engines, date of manufacture means the date the engine was originally produced, except as specified in paragraph (3) of this definition.

(3) Reconstructed engines are assigned a new date of manufacture if the fixed capital cost of the new and refurbished components exceeds 75 percent of the fixed capital cost of a comparable entirely new facility. An engine that is produced from a previously used engine block does not retain the date of manufacture of the engine in which the engine block was previously used if the engine is produced using all new components except for the engine block. In these cases, the date of manufacture is the date of reconstruction or the date the new engine is produced.

Diesel fuel means any liquid obtained from the distillation of petroleum with a boiling point of approximately 150 to 360 degrees Celsius. One commonly used form is number 2 distillate oil.

Diesel particulate filter means an emission control technology that reduces PM emissions by trapping the particles in a flow filter substrate and periodically removes the collected particles by either physical action or by oxidizing (burning off) the particles in a process called regeneration.

Emergency stationary internal combustion engine means any stationary internal combustion engine whose operation is limited to emergency situations and required testing and maintenance. Examples include stationary ICE used to produce power for critical networks or equipment (including power supplied to portions of a facility) when electric power from the local utility (or the normal power source, if the facility runs on its own power production) is interrupted, or stationary ICE used to pump water in the case of fire or flood, etc. Stationary CI ICE used to supply power to an electric grid or that supply power as part of a financial arrangement with another entity are not considered to be emergency engines.

Engine manufacturer means the manufacturer of the engine. See the definition of “manufacturer” in this section.

Fire pump engine means an emergency stationary internal combustion engine certified to NFPA requirements that is used to provide power to pump water for fire suppression or protection.

Freshly manufactured engine means an engine that has not been placed into service. An engine becomes freshly manufactured when it is originally produced.

Installed means the engine is placed and secured at the location where it is intended to be operated.

Manufacturer has the meaning given in section 216(1) of the Act. In general, this term includes any person who manufactures a stationary engine for sale in the United States or otherwise introduces a new stationary engine into commerce in the United States. This includes importers who import stationary engines for sale or resale.

Maximum engine power means maximum engine power as defined in 40 CFR 1039.801.

Model year means the calendar year in which an engine is manufactured (see “date of manufacture”), except as follows:

(1) Model year means the annual new model production period of the engine manufacturer in which an engine is manufactured (see “date of manufacture”), if the annual new model production period is different than the calendar year and includes January 1 of the calendar year for which the model year is named. It may not begin before January 2 of the previous calendar year and it must end by December 31 of the named calendar year.

(2) For an engine that is converted to a stationary engine after being placed into service as a nonroad or other non-stationary engine, model year means the calendar year or new model production period in which the engine was manufactured (see “date of manufacture”).

Other internal combustion engine means any internal combustion engine, except combustion turbines, which is not a reciprocating internal combustion engine or rotary internal combustion engine.

Reciprocating internal combustion engine means any internal combustion engine which uses reciprocating motion to convert heat energy into mechanical work.

Rotary internal combustion engine means any internal combustion engine which uses rotary motion to convert heat energy into mechanical work.

Spark ignition means relating to a gasoline, natural gas, or liquefied petroleum gas fueled engine or any other type of engine with a spark plug (or other sparking device) and with operating characteristics significantly similar to the theoretical Otto combustion

cycle. Spark ignition engines usually use a throttle to regulate intake air flow to control power during normal operation. Dual-fuel engines in which a liquid fuel (typically diesel fuel) is used for CI and gaseous fuel (typically natural gas) is used as the primary fuel at an annual average ratio of less than 2 parts diesel fuel to 100 parts total fuel on an energy equivalent basis are spark ignition engines.

Stationary internal combustion engine means any internal combustion engine, except combustion turbines, that converts heat energy into mechanical work and is not mobile. Stationary ICE differ from mobile ICE in that a stationary internal combustion engine is not a nonroad engine as defined at 40 CFR 1068.30 (excluding paragraph (2)(ii) of that definition), and is not used to propel a motor vehicle, aircraft, or a vehicle used solely for competition. Stationary ICE include reciprocating ICE, rotary ICE, and other ICE, except combustion turbines.

Subpart means 40 CFR part 60, subpart IIII.

[71 FR 39172, July 11, 2006, as amended at 76 FR 37972, June 28, 2011]

IFL has read and understands these definitions and used them in providing this regulatory analysis.

Back to Top

Table 1 to Subpart IIII of Part 60—Emission Standards for Stationary Pre-2007 Model Year Engines With a Displacement of <10 Liters per Cylinder and 2007-2010 Model Year Engines >2,237 KW (3,000 HP) and With a Displacement of <10 Liters per Cylinder

[As stated in §§ 60.4201(b), 60.4202(b), 60.4204(a), and 60.4205(a), you must comply with the following emission standards]

Maximum engine power	Emission standards for stationary pre-2007 model year engines with a displacement of <10 liters per cylinder and 2007-2010 model year engines >2,237 KW (3,000 HP) and with a displacement of <10 liters per cylinder in g/KW-hr (g/HP-hr)				
	NMHC + NO_X	HC	NO_X	CO	PM
KW<8 (HP<11)	10.5 (7.8)			8.0 (6.0)	1.0 (0.75)
8≤KW<19 (11≤HP<25)	9.5 (7.1)			6.6 (4.9)	0.80 (0.60)
19≤KW<37 (25≤HP<50)	9.5 (7.1)			5.5 (4.1)	0.80 (0.60)
37≤KW<56 (50≤HP<75)			9.2 (6.9)		
56≤KW<75 (75≤HP<100)			9.2 (6.9)		
75≤KW<130 (100≤HP<175)			9.2 (6.9)		
130≤KW<225 (175≤HP<300)		1.3 (1.0)	9.2 (6.9)	11.4 (8.5)	0.54 (0.40)
225≤KW<450 (300≤HP<600)		1.3 (1.0)	9.2 (6.9)	11.4 (8.5)	0.54 (0.40)
450≤KW≤560 (600≤HP≤750)		1.3 (1.0)	9.2 (6.9)	11.4 (8.5)	0.54 (0.40)
KW>560 (HP>750)		1.3 (1.0)	9.2 (6.9)	11.4 (8.5)	0.54 (0.40)

IFL's fire pump engine was manufactured after 2010. Table 1 does not apply.

Back to Top

Table 2 to Subpart IIII of Part 60—Emission Standards for 2008 Model Year and Later Emergency Stationary CI ICE <37 KW (50 HP) With a Displacement of <10 Liters per Cylinder

[As stated in § 60.4202(a)(1), you must comply with the following emission standards]

Engine power	Emission standards for 2008 model year and later emergency stationary CI ICE <37 KW (50 HP) with a displacement of <10 liters per cylinder in g/KW-hr (g/HP-hr)			
	Model year(s)	NO_X+ NMHC	CO	PM
KW<8 (HP<11)	2008+	7.5 (5.6)	8.0 (6.0)	0.40 (0.30)
8≤KW<19 (11≤HP<25)	2008+	7.5 (5.6)	6.6 (4.9)	0.40 (0.30)
19≤KW<37 (25≤HP<50)	2008+	7.5 (5.6)	5.5 (4.1)	0.30 (0.22)

IFL's fire pump engine size is greater than 50 HP. Table 2 does not apply.

Back to Top

Table 3 to Subpart IIII of Part 60—Certification Requirements for Stationary Fire Pump Engines

As stated in § 60.4202(d), you must certify new stationary fire pump engines beginning with the following model years:

Engine power	Starting model year engine manufacturers must certify new stationary fire pump engines according to § 60.4202(d)[1]
KW<75 (HP<100)	2011
75≤KW<130 (100≤HP<175)	2010
130≤KW≤560 (175≤HP≤750)	2009
KW>560 (HP>750)	2008

[1]Manufacturers of fire pump stationary CI ICE with a maximum engine power greater than or equal to 37 kW (50 HP) and less than 450 KW (600 HP) and a rated speed of greater than 2,650 revolutions per minute (rpm) are not required to certify such engines until three model years following the model year indicated in this Table 3 for engines in the applicable engine power category.

[71 FR 39172, July 11, 2006, as amended at 76 FR 37972, June 28, 2011]

IFL has purchased a fire pump engine which was manufactured after 2009 and has been certified according to 60.4202(d).

Back to Top

Table 4 to Subpart IIII of Part 60—Emission Standards for Stationary Fire Pump Engines

[As stated in §§ 60.4202(d) and 60.4205(c), you must comply with the following emission standards for stationary fire pump engines]

Maximum engine power	Model year(s)	NMHC + NO_X	CO	PM
KW<8 (HP<11)	2010 and earlier	10.5 (7.8)	8.0 (6.0)	1.0 (0.75)
	2011+	7.5 (5.6)		0.40 (0.30)
8≤KW<19 (11≤HP<25)	2010 and earlier	9.5 (7.1)	6.6 (4.9)	0.80 (0.60)
	2011+	7.5 (5.6)		0.40 (0.30)
19≤KW<37 (25≤HP<50)	2010 and earlier	9.5 (7.1)	5.5 (4.1)	0.80 (0.60)
	2011+	7.5 (5.6)		0.30 (0.22)
37≤KW<56 (50≤HP<75)	2010 and earlier	10.5 (7.8)	5.0 (3.7)	0.80 (0.60)
	2011+ [1]	4.7 (3.5)		0.40 (0.30)
56≤KW<75 (75≤HP<100)	2010 and earlier	10.5 (7.8)	5.0 (3.7)	0.80 (0.60)
	2011+ [1]	4.7 (3.5)		0.40 (0.30)
75≤KW<130 (100≤HP<175)	2009 and earlier	10.5 (7.8)	5.0 (3.7)	0.80 (0.60)
	2010+ [2]	4.0 (3.0)		0.30 (0.22)
130≤KW<225 (175≤HP<300)	2008 and earlier	10.5 (7.8)	3.5 (2.6)	0.54 (0.40)
	2009+ [3]	4.0 (3.0)		0.20 (0.15)
225≤KW<450 (300≤HP<600)	2008 and earlier	10.5 (7.8)	3.5 (2.6)	0.54 (0.40)
	2009+ [3]	4.0 (3.0)		0.20 (0.15)
450≤KW≤560 (600≤HP≤750)	2008 and earlier	10.5 (7.8)	3.5 (2.6)	0.54 (0.40)
	2009+	4.0 (3.0)		0.20 (0.15)
KW>560 (HP>750)	2007 and earlier	10.5 (7.8)	3.5 (2.6)	0.54 (0.40)
	2008+	6.4 (4.8)		0.20 (0.15)

[1] For model years 2011-2013, manufacturers, owners and operators of fire pump stationary CI ICE in this engine power category with a rated speed of greater than 2,650 revolutions per minute (rpm) may comply with the emission limitations for 2010 model year engines.

[2] For model years 2010-2012, manufacturers, owners and operators of fire pump stationary CI ICE in this engine power category with a rated speed of greater than 2,650 rpm may comply with the emission limitations for 2009 model year engines.

[3] In model years 2009-2011, manufacturers of fire pump stationary CI ICE in this engine power category with a rated speed of greater than 2,650 rpm may comply with the emission limitations for 2008 model year engines.

IFL is required to meet the emission limitations highlighted above. The fire pump engine at IFL has been certified to meet the applicable emission limitations of Table 4 above. IFL has complied with these emission limitations by purchasing a fire pump engine certified to meet these limits.

Back to Top

Table 5 to Subpart IIII of Part 60—Labeling and Recordkeeping Requirements for New Stationary Emergency Engines

[You must comply with the labeling requirements in § 60.4210(f) and the recordkeeping requirements in § 60.4214(b) for new emergency stationary CI ICE beginning in the following model years:]

Engine power	Starting model year
19≤KW<56 (25≤HP<75)	2013
56≤KW<130 (75≤HP<175)	2012
KW≥130 (HP≥175)	2011

Table 5 applies to manufacturer engine certification and does not apply to IFL.

Back to Top

Table 6 to Subpart IIII of Part 60—Optional 3-Mode Test Cycle for Stationary Fire Pump Engines

[As stated in § 60.4210(g), manufacturers of fire pump engines may use the following test cycle for testing fire pump engines:]

Mode No.	Engine speed [1]	Torque (percent) [2]	Weighting factors
1	Rated	100	0.30
2	Rated	75	0.50
3	Rated	50	0.20

[1] Engine speed: ±2 percent of point.

[2] Torque: NFPA certified nameplate HP for 100 percent point. All points should be ±2 percent of engine percent load value.

Table 6 applies to manufacturer engine certification and does not apply to IFL.

Back to Top

Table 7 to Subpart IIII of Part 60—Requirements for Performance Tests for Stationary CI ICE With a Displacement of ≥30 Liters per Cylinder

[As stated in § 60.4213, you must comply with the following requirements for performance tests for stationary CI ICE with a displacement of ≥30 liters per cylinder:]

For each	Complying with the requirement to	You must	Using	According to the following requirements
1. Stationary CI internal combustion	a. Reduce NO_Xemissions by 90 percent or more	i. Select the sampling port location and the number of traverse	(1) Method 1 or 1A of 40 CFR part 60, appendix A	(a) Sampling sites must be located at the inlet and outlet of the control device.

engine with a displacement of≥ 30 liters per cylinder		points;		
		ii. Measure O_2at the inlet and outlet of the control device;	(2) Method 3, 3A, or 3B of 40 CFR part 60, appendix A	(b) Measurements to determine O_2concentration must be made at the same time as the measurements for NO_Xconcentration.
		iii. If necessary, measure moisture content at the inlet and outlet of the control device; and,	(3) Method 4 of 40 CFR part 60, appendix A, Method 320 of 40 CFR part 63, appendix A, or ASTM D 6348-03 (incorporated by reference, see § 60.17)	(c) Measurements to determine moisture content must be made at the same time as the measurements for NO_Xconcentration.
		iv. Measure NO_Xat the inlet and outlet of the control device	(4) Method 7E of 40 CFR part 60, appendix A, Method 320 of 40 CFR part 63, appendix A, or ASTM D 6348-03 (incorporated by reference, see § 60.17)	(d) NO_Xconcentration must be at 15 percent O_2, dry basis. Results of this test consist of the average of the three 1-hour or longer runs.
	b. Limit the concentration of NO_Xin the stationary CI internal combustion engine exhaust.	i. Select the sampling port location and the number of traverse points;	(1) Method 1 or 1A of 40 CFR part 60, appendix A	(a) If using a control device, the sampling site must be located at the outlet of the control device.
		ii. Determine the O_2concentration of the stationary internal combustion engine exhaust at the sampling port location; and,	(2) Method 3, 3A, or 3B of 40 CFR part 60, appendix A	(b) Measurements to determine O_2concentration must be made at the same time as the measurement for NO_Xconcentration.
		iii. If necessary, measure moisture content of the stationary internal combustion engine exhaust at the sampling port location; and,	(3) Method 4 of 40 CFR part 60, appendix A, Method 320 of 40 CFR part 63, appendix A, or ASTM D 6348-03 (incorporated by reference, see § 60.17)	(c) Measurements to determine moisture content must be made at the same time as the measurement for NO_Xconcentration.
		iv. Measure NO_Xat the exhaust of the stationary internal combustion engine	(4) Method 7E of 40 CFR part 60, appendix A, Method 320 of 40 CFR part 63, appendix A, or ASTM D 6348-03 (incorporated by reference, see § 60.17)	(d) NO_Xconcentration must be at 15 percent O_2, dry basis. Results of this test consist of the average of the three 1-hour or longer runs.

	c. Reduce PM emissions by 60 percent or more	i. Select the sampling port location and the number of traverse points;	(1) Method 1 or 1A of 40 CFR part 60, appendix A	(a) Sampling sites must be located at the inlet and outlet of the control device.
		ii. Measure O_2at the inlet and outlet of the control device;	(2) Method 3, 3A, or 3B of 40 CFR part 60, appendix A	(b) Measurements to determine O_2concentration must be made at the same time as the measurements for PM concentration.
		iii. If necessary, measure moisture content at the inlet and outlet of the control device; and	(3) Method 4 of 40 CFR part 60, appendix A	(c) Measurements to determine and moisture content must be made at the same time as the measurements for PM concentration.
		iv. Measure PM at the inlet and outlet of the control device	(4) Method 5 of 40 CFR part 60, appendix A	(d) PM concentration must be at 15 percent O_2, dry basis. Results of this test consist of the average of the three 1-hour or longer runs.
	d. Limit the concentration of PM in the stationary CI internal combustion engine exhaust	i. Select the sampling port location and the number of traverse points;	(1) Method 1 or 1A of 40 CFR part 60, appendix A	(a) If using a control device, the sampling site must be located at the outlet of the control device.
		ii. Determine the O_2concentration of the stationary internal combustion engine exhaust at the sampling port location; and	(2) Method 3, 3A, or 3B of 40 CFR part 60, appendix A	(b) Measurements to determine O_2concentration must be made at the same time as the measurements for PM concentration.
		iii. If necessary, measure moisture content of the stationary internal combustion engine exhaust at the sampling port location; and	(3) Method 4 of 40 CFR part 60, appendix A	(c) Measurements to determine moisture content must be made at the same time as the measurements for PM concentration.
		iv. Measure PM at the exhaust of the stationary internal combustion engine	(4) Method 5 of 40 CFR part 60, appendix A	(d) PM concentration must be at 15 percent O_2, dry basis. Results of this test consist of the average of the three 1-hour or longer runs.

IFL is not required to perform performance tests; Table 7 does not apply.

Back to Top

Table 8 to Subpart IIII of Part 60—Applicability of General Provisions to Subpart IIII

[As stated in § 60.4218, you must comply with the following applicable General Provisions:]

General Provisions citation	Subject of citation	Applies to subpart	Explanation
§ 60.1	General applicability of the General Provisions	Yes	
§ 60.2	Definitions	Yes	Additional terms defined in § 60.4219.
§ 60.3	Units and abbreviations	Yes	
§ 60.4	Address	Yes	
§ 60.5	Determination of construction or modification	Yes	
§ 60.6	Review of plans	Yes	
§ 60.7	Notification and Recordkeeping	Yes	Except that § 60.7 only applies as specified in § 60.4214(a).
§ 60.8	Performance tests	Yes	Except that § 60.8 only applies to stationary CI ICE with a displacement of (≥30 liters per cylinder and engines that are not certified.
§ 60.9	Availability of information	Yes	
§ 60.10	State Authority	Yes	
§ 60.11	Compliance with standards and maintenance requirements	No	Requirements are specified in subpart IIII.
§ 60.12	Circumvention	Yes	
§ 60.13	Monitoring requirements	Yes	Except that § 60.13 only applies to stationary CI ICE with a displacement of (≥30 liters per cylinder.
§ 60.14	Modification	Yes	
§ 60.15	Reconstruction	Yes	
§ 60.16	Priority list	Yes	
§ 60.17	Incorporations by reference	Yes	
§ 60.18	General control device requirements	No	
§ 60.19	General notification and reporting requirements	Yes	

IFL is required to maintain compliance with the highlighted conditions shown in Table 8 above.

Back to Top

For questions or comments regarding e-CFR editorial content, features, or design, email ecfr@nara.gov.
For questions concerning e-CFR programming and delivery issues, email webteam@gpo.gov.

BISON
ENGINEERING, INC.

1400 11TH AVENUE • HELENA, MT 59601 • 406-442-5768
FAX: 406-449-6653 • E-MAIL: bison@bison-eng.com • www.bison-eng.com

October 1, 2012

RECEIVED
OCT 02 2012
DEPARTMENT OF ENVIRONMENTAL QUALITY
STATE A.Q. PROGRAM

Shawnee Chen
Idaho Dept. of Environmental Quality
Air Quality Division
1410 N. Hilton
Boise, ID 83706

Dear Ms. Chen:

RE: Air Quality Impact Analysis for Idahoan Foods, LLC (Facility ID No. 019-00038, Permit No. T2-2009.0027)

On behalf of Idahoan Foods, LLC (IFL), Bison Engineering, Inc. (Bison) is pleased to submit this updated air quality impact analysis in association with the requested modification to PTC and Tier II Operating Permit No. T2-2009.0027 previously submitted by IFL. The permit regulates and authorizes operations at IFL's Idaho Falls facility located near Idaho Falls, ID.

This analysis serves to update a previously submitted analysis based upon emission inventory and facility changes brought to light during project review by the Idaho Department of Environmental Quality (IDEQ).

Please call me at 406-442-5768 if you have any questions about this air quality impact analysis or supporting materials.

Sincerely,
BISON ENGINEERING, INC.

Derek Fleming
Staff Engineer

Attachment

cc: Leo Herbert – Idahoan Foods, LLC
Cheryl Robinson - IDEQ

RECEIVED
OCT 02 2012
DEPARTMENT OF ENVIRONMENTAL QUALITY
STATE A Q PROGRAM

UPDATED AERMOD MODELING REPORT IDAHOAN FOODS, LLC

Presented to:
Idaho Department of Environmental Quality
Boise, Idaho

For:
Idahoan Foods, LLC
P.O. Box 130
Lewisville, ID 83431

Prepared by:
Bison Engineering, Inc.
1400 11th Avenue
Helena, MT 59601
(406) 442-5768

October 1, 2012

TABLE OF CONTENTS

1.0 INTRODUCTION AND PURPOSE 1
1.1 General Overview 1
1.2 Project Overview 1
1.3 Applicable Regulations and Requirements 1
2.0 MODEL DESCRIPTION AND JUSTIFICATION 3
3.0 EMISSIONS AND SOURCE DATA 5
3.1 Emission Inventory Changes 5
3.2 Inconsequential Source Analysis 5
3.3 Pollutants of Concern 6
3.4 Building Parameters and Facility Layout 6
3.5 Source Locations and Parameters 8
3.5.1 Fluid Bed Dryers 10
3.5.2 Boiler #1 10
3.5.3 Drum Dryer / Flaker 10
3.5.4 Air Makeup Units 10
3.5.5 Bin Dryers 1 and 2 10
3.5.6 Proctor and Schwartz Belt Dryers 11
3.5.7 Product Transfer Sources 11
4.0 AMBIENT AIR BOUNDARY 12
5.0 RECEPTOR NETWORK 14
6.0 ELEVATION DATA 15
7.0 METEOROLOGICAL DATA 16
8.0 LAND-USE CLASSIFICATION 17
9.0 BACKGROUND CONCENTRATION 18
10.0 EVALUATION OF COMPLIANCE WITH STANDARDS 19
10.1 Modeling Threshold Analysis: Phase 1 19
10.2 SIL Modeling Analysis: Phase 2 19
11.0 ELECTRONIC FILE DESCRIPTIONS 21

LIST OF TABLES

Table 3-1: Emission Inventory Summary Table 5
Table 3-2: Comparison of $PM_{2.5}$ Emission Sources 6
Table 3-3: Emission Increases Compared to Modeling Emission Thresholds 6
Table 3-4: Building Parameters 7
Table 3-5: Emitting Unit Numbering 8
Table 10-1: Air Quality Significance Levels and Modeling Results 19

LIST OF FIGURES

Figure 3-1: Facility Building Layout 7
Figure 3-2: Facility Layout Detail of Plant Buildings 9
Figure 4-1: Ambient Air Boundary Location 13
Figure 8-1: Imagery for Determining Land Use Classifications 17

LIST OF APPENDICES

Appendix A: Emission Inventory and Modeling Parameter Tables
Appendix B: TAPs Analysis
Appendix C: Fluid Bed Dryer Manufacturer Data
Appendix D: Facility Layout Drawing
Appendix E: Electronic Modeling Files

1.0 INTRODUCTION AND PURPOSE

1.1 General Overview

Bison Engineering, Inc. (Bison), on behalf of Idahoan Foods, LLC (IFL), is submitting this ambient air quality analysis for the proposed modifications to IFL's existing potato processing plant located approximately 2.5 miles north of Idaho Falls (Facility ID No. 019-00038). The facility processes fresh potatoes into dehydrated potato products which include flakes, slices and dices. The area surrounding the plant consists largely of agricultural land with some residential areas nearby, specifically to the south and east of the facility.

A previous modeling analysis was submitted on August 30, 2012. This submittal serves to address ambient air quality impacts associated with multiple changes to the emission inventory and parameters submitted in the previously submitted analysis.

Changes in the emission inventory were prompted during project review conducted by the Idaho Department of Environmental Quality (IDEQ). Updates to the emission inventory based upon IDEQ review resulted in increases in particulate emissions for the fluid bed dryers, which increased emissions above modeling threshold levels. Also, upon further review of the project, IFL determined that several of the material handling sources previously included in the emission inventory will not be vented to the atmosphere and will have no emissions.

All of these updates have been reflected in this updated ambient air quality analysis.

1.2 Project Overview

IFL is proposing to install two new fluid bed dryers, an additional air makeup unit (AMU), one additional drum dryer/flaker and several material handling sources with baghouses/cyclones. The two new fluid bed dryers are being installed to replace the three permitted belt dryers, which will be removed from the facility.

In addition to the installation of new equipment, IFL is proposing to cease fuel oil combustion in Boiler #1.

A comparison of all emissions increases to modeling thresholds is presented in Table A-3 in Appendix A. An inventory of toxic air pollutants (TAPs) and comparison of emission rates with TAPs modeling thresholds are presented in Appendix B.

1.3 Applicable Regulations and Requirements

Idaho Air Rules Sections 203 and 403 state that a permit to construct or Tier II operating permit will not be granted unless the applicant demonstrates to the Idaho Department of Environmental Quality (IDEQ) that the new source/modification will not cause or significantly contribute to the violation of any air quality standard. In addition IFL must

demonstrate compliance with Idaho Air Rules Section 161, which provides ambient air requirements for Toxic Air Pollutants (TAPs).

The purpose of this report and associated ambient air quality analysis is to provide IDEQ with information and justification regarding the procedures that were used to conduct the required air quality analyses, as well as present the results of the air quality analyses performed to satisfy the requirements discussed above.

2.0 MODEL DESCRIPTION AND JUSTIFICATION

The model selected for the analysis is AERMOD as recommended by *State of Idaho Guideline for Performing Air Quality Impact Analyses*. The following discussion further explains the features of AERMOD, AERMET, and AERMAP. AERMET and AERMAP are preprocessors for AERMOD.

AERMOD is a steady-state plume dispersion model for the assessment of pollutant concentrations from a variety of sources. AERMOD simulates transport and dispersion from multiple sources based on an updated characterization of the atmospheric boundary layer. Sources may be located in rural or urban areas and receptors may be located in simple or complex terrain. AERMOD accounts for building wake effects and plume downwash. Sequential meteorological data is processed to estimate concentrations for averaging times from one hour to one year. AERMOD is appropriate for point, volume, and/or area sources; for surface, near-surface, and elevated releases; for rural or urban areas; for simple and complex terrain; for transport distances over which steady-state assumptions are appropriate (up to 50 km); and for continuous toxic air emissions. AERMOD's regulatory default option includes the use of terrain elevation data, stack-tip downwash, and sequential date checking. The regulatory option does not employ pollutant half-life or decay options except in the case of an urban source of sulfur dioxide where a four-hour half-life is applied.

AERMOD is designed to accept input data prepared by two specific pre-processor programs, AERMET and AERMAP. AERMET processes meteorological data available from the National Climatic Data Center (NCDC). AERMAP processes digital elevation data available from several different sources.

AERMET is designed to accept National Weather Service (NWS) 1-hour surface observations, NWS twice-daily upper air soundings, and data from on-site meteorological measurement systems. These data are processed in three steps. The first step extracts data from the archive data files and performs various quality assessment checks. The second step merges all available data (both NWS and on-site). These merged data are stored together in a single file. The third step reads the merged meteorological data and estimates the boundary layer parameters needed by AERMOD. AERMET writes two files for input to AERMOD: a file of hourly boundary layer parameter estimates and a file of multiple-level (when the data are available) observations of wind speed and direction, temperature, and standard deviation of the fluctuating components of the wind direction.

AERMAP processes terrain elevation data available from the U.S. Geological Survey (USGS). The data are available in three distinct formats. There is the Digital Elevation Model (DEM) format which follows the old USGS "Blue Book" standard. There is the newer Spatial Data Transfer Standard (SDTS) which formats the DEM and other associated data in metadata form. Finally there is the National Elevation Dataset (NED) which is constantly updated and is available in several formats for importing into widely used commercial software packages. NED was used in this application.

AERMAP first determines the base elevation at each receptor and source. For complex terrain situations, AERMOD captures the essential physics of dispersion in complex terrain and needs elevation data that convey the features of the surrounding terrain. In response to this need, AERMAP searches for the terrain height and location that has the greatest influence on dispersion for each individual receptor. This height is then referred to as the hill height scale. Both the base elevation and hill height scale data are produced by AERMAP as a file or files which can be directly accessed by AERMOD.

The most current EPA-accepted AERMOD version with the standard regulatory default options was used for the air quality impact analysis. IDEQ prepared and ran AERMET for the meteorological data set for the AERMOD analyses. For this application, the source code for the AERMOD modeling system is provided by BEE-Line Software.

3.0 EMISSIONS AND SOURCE DATA

3.1 Emission Inventory Changes

The permit modification application submitted to IDEQ detailed the modifications made to the facility. IFL is proposing to modify the facility's PTC/Tier II permit as follows:

1. Install two new fluid bed dryers,
2. Install one new air makeup unit,
3. Install one new drum dryer/flaker,
4. Install several new material handling sources and vacuum lifts,
5. Cease fuel oil combustion,
6. Remove two existing bin dryers,
7. Remove three existing belt dryers,
8. Remove one existing vacuum lift.

Emission rates for new sources were taken from the emissions calculated by IDEQ during the review of this project. The current permitted emission rates used to calculate the changes in emissions were taken from the rates listed in the Tier II Operating Permit and Permit to Construct No. T2-2007.0116. A summary of the emission inventory is presented in Table 3-1.

Table 3-1: Emission Inventory Summary Table

Emission Scenario	$PM_{2.5}$[a]/PM_{10}		SO_2		NOx		VOC		CO	
	lb/hr	T/yr	lb/hr	T/yr	lb/hr	T/yr	lb/hr	T/yr	lb/hr	T/yr
Current Permitted	14.55	63.51	14.55	63.51	31.93	94.05	19.96	78.80	0.53	2.48
Proposed	16.52	72.40	16.52	72.40	0.08	0.35	9.41	58.65	0.67	2.86
Net Change	1.97	8.89	1.97	8.89	-31.85	-93.70	-6.03	-20.15	0.13	0.38
Emission Increases Only	11.33	49.85	11.33	49.85	0.01	0.06	2.48	10.86	0.30	0.98

[a]$PM_{2.5}$ emissions are assumed to be equal to PM_{10} emissions

Detailed tables of emission rates are presented in Appendix A. Table A-1 presents the facility's current potential to emit. Table A-2 presents the proposed potential to emit. Table A-3 presents the increase/decrease in emissions.

3.2 Inconsequential Source Analysis

The $PM_{2.5}$ emission source listed in Table 3-2 below has been determined to be inconsequential as discussed in Sections 6.3.1 and 6.3.2 of the *Guideline for Performing Air Quality Impact Analyses*. These sources each have emission rates that are between two and five orders of magnitude less than the two larger sources of PM_{10}/$PM_{2.5}$ emissions. The sum of the inconsequential sources is at least three orders of magnitude less than either of the other two sources' emissions rates. Based on the

wide disparity among the emissions rate of these sources, Bison proposes that these sources be considered inconsequential for this demonstration.

Table 3-2: Comparison of $PM_{2.5}$ Emission Sources

Emission Unit	Emission Rate (lb/hr)	Emission Rate (tpy)
Baghouse Exhaust Dust Collector Emissions	1.03E-10	4.50E-10
Total Other Particulate Emissions	16.31	71.46

3.3 Pollutants of Concern

Table 3-3 presents the total increase in emissions (without accounting for emissions reductions) associated with this project, and compares these increases to the Level I and Level II modeling thresholds. Comparison with these thresholds shows that the PM_{10}, $PM_{2.5}$ and NOx emissions exceed Level I thresholds for both the lb/hr and tpy emissions rates of three of these, and exceed the Level II threshold for the lb/hr emission rate of NOx as well as both the tpy threshold for PM_{10} and $PM_{2.5}$. Modeling was performed for compliance with both the 1-hr and annual basis for NOx and the 24-hr and annual basis for PM_{10} and $PM_{2.5}$. Please see Table A-4 in Appendix A for detailed information regarding emissions increases.

Table 3-3: Emission Increases Compared to Modeling Emission Thresholds

Emission Scenario	$PM_{2.5}$		PM_{10}		SO_2		NOx		VOC		CO	
	lb/hr	T/yr	lb/hr	T/yr	lb/hr	T/yr	lb/hr	T/yr	lb/hr	T/yr	lb/hr	T/yr
Increase Associated with Modification	11.33	49.85	11.33	49.85	0.01	0.06	2.48	10.86	0.30	0.98	2.08	9.13
Level I Thresholds	0.054	0.35	0.22	---	0.21	1.2	0.2	1.2	---	---	15	---
Level II Thresholds	0.63	4.1	2.6	---	2.5	14	2.4	14	---	---	175	---
Exceeds Level I Thresholds?	Yes	Yes	Yes	No	No	No	Yes	Yes	No	No	No	No
Exceeds Level II Thresholds?	Yes	Yes	Yes	No	No	No	Yes	No	No	No	No	No

3.4 Building Parameters and Facility Layout

Building parameters were obtained from facility records maintained by IFL. Geospatial locations of all building and emissions points are based on comparison of plant layout drawings with overhead satellite imagery.

Table 3-4 provides the building parameters, which can be referenced to the facility layout provided in Figure 3-1 through the building codes displayed over each building.

For buildings with sloped roofs, the peak height of the building was used in the modeling analysis.

Table 3-4: Building Parameters

Building Code	Building Length (ft)	Building Width (ft)	Building Height (ft)	Building Elevation (m)
BLDG1-1	51'	198'	22'	1444.99
BLDG1-2	39'	17'	22'	1444.99
BLDG2	180'	180'	27'	1445.61
BLDG3-1	230'	115'	27'	1445.5
BLDG3-2	70'	79'	27'	1445.5
BLDG3-3	31'	18.5'	27'	1445.5
BLDG3-4	35'	14'	27'	1445.5
BLDG4-1	351'	60'	27'	1446.09
BLDG4-2	49'	49'	27'	1446.09
BLDG5	347'	251'	22'	1449.39

Figure 3-1: Facility Building Layout

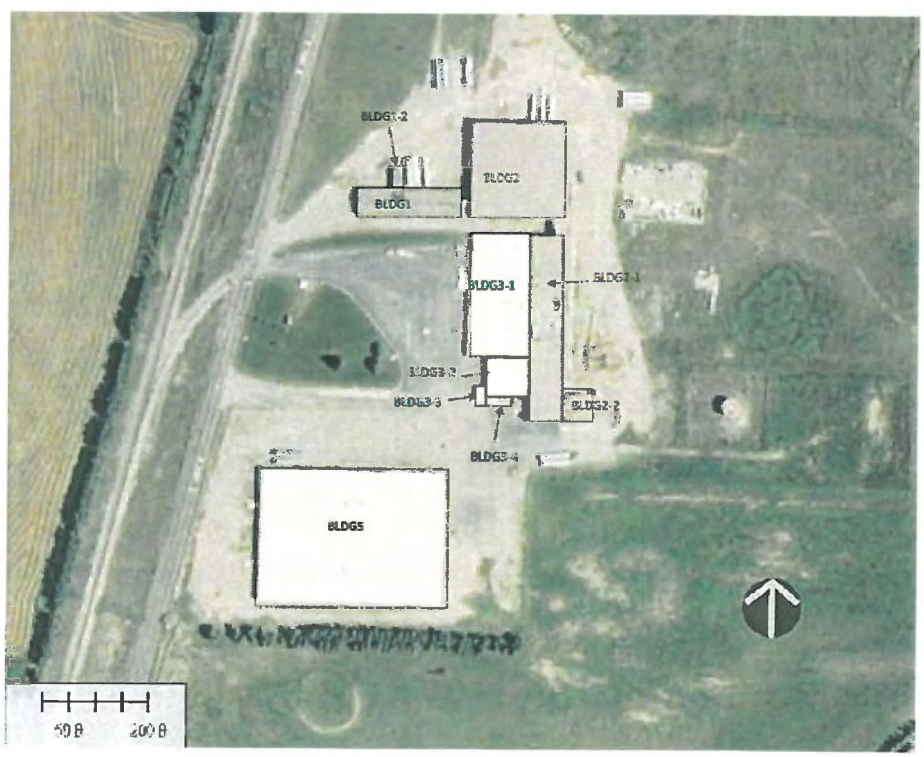

3.5 Source Locations and Parameters

Table A-4 of Appendix A presents the source parameters that were used for the sources being modeled. Source emissions rates are the same as described in Table A-3, which reflect the increases and decreases in PTE for emissions sources. Emission sources with decreases in PTE were modeled as negative emissions rates. Stack locations were determined from plant drawings provided by IFL. Figure 3-2 shows the process buildings (BLDG3 and BLDG4) with the emitting unit locations which were used to place the emitting units in the model. Further description and justification of the source parameters used are detailed below. A scaled facility layout drawing is included in Appendix D of this report. Table 3-5 lists the emitting units by number for cross-referencing with Figure 3-2.

Table 3-5: Emitting Unit Numbering

1	Boiler #1
2	Boiler #2
3	Flaker/ Drum Dryer #1
4	Flaker/ Drum Dryer #2
5	Flaker/ Drum Dryer #3
6	Flaker/ Drum Dryer #4
7	Flaker Line 1 & 2 Vaculift
8	Flake Line 3 Vaculift
9	Flaker Line 4 Vaculift and Baghouse
10	Air Makeup Unit #1
11	Air Makeup Unit #2
12	Air Makeup Unit #3
13	Air Makeup Unit #4
14	Product Transfer Raw Baghouse
15	Dust Collect System Exhaust Baghouse
16	Fluid Bed Dyer #1
17	Fluid Bed Dryer #2
18	Creamy Mash Exhaust Cyclone
19	Bag Room Packaging Cyclone

Figure 3-2: Facility Layout Detail of Plant Buildings

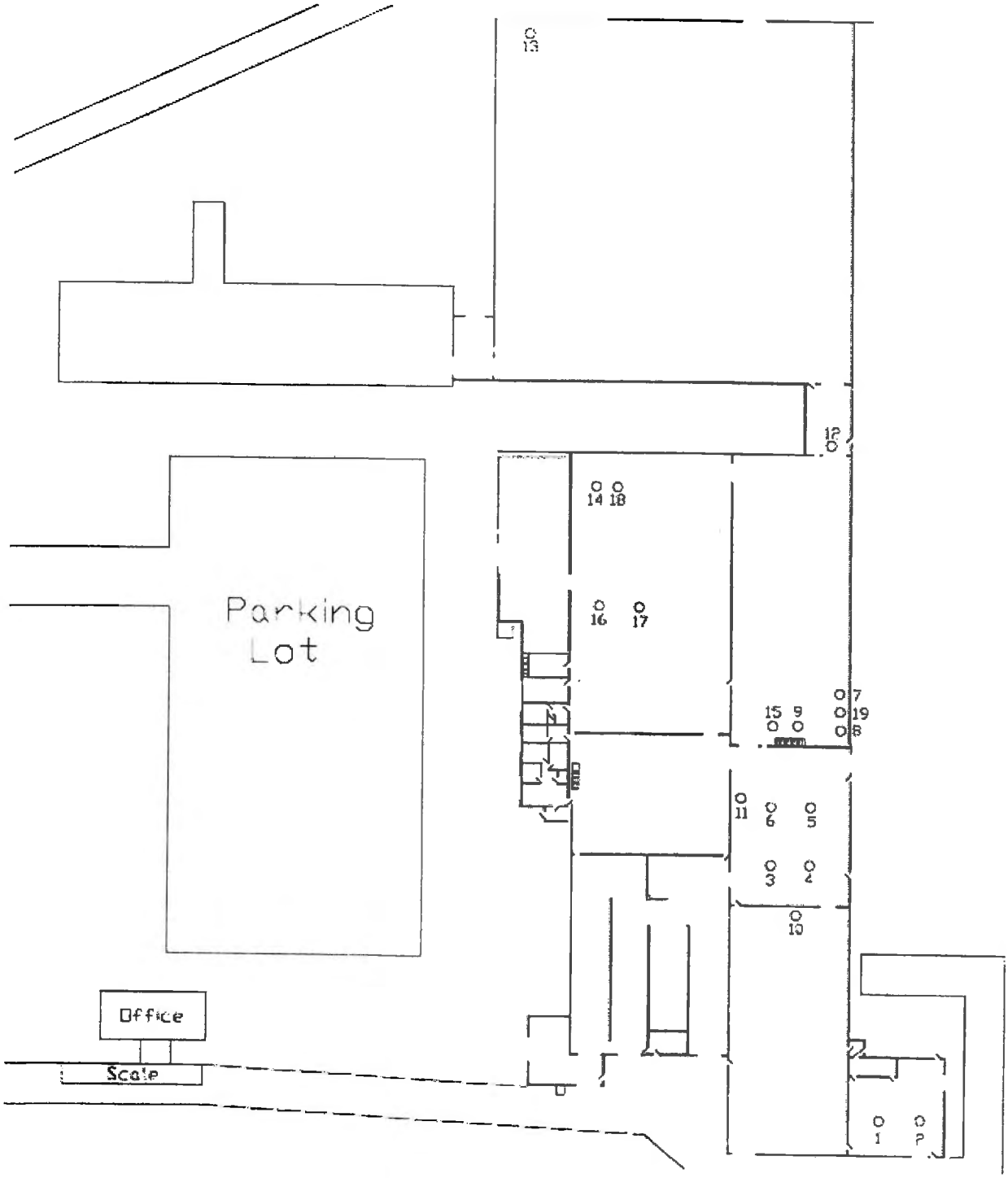

3.5.1 Fluid Bed Dryers

The two fluid bed dryers will be in the same location as the existing belt dryers, where there is an existing cutaway in the concrete roof for the exhaust stacks. The two fluid bed dryers share identical stack parameters, which include vertical releases without rain caps. Source parameters are presented in Table A-4 of Appendix A and information provided by the manufacturer of the fluid bed dryers is attached in Appendix C.

3.5.2 Boiler #1

IFL is removing the permit condition which allows them to burn fuel oil in the #1 Boiler. Burning only natural gas in the boiler reduces emissions from all criteria pollutants substantially. The subsequent reduction in NOx emissions has been modeled as a negative emission rate. Stack parameters for this emitting unit are based on historical parameters used in the ambient air quality analyses. These parameters have been deemed representative by IFL.

3.5.3 Drum Dryer / Flaker

IFL is installing one new drum dryer / flaker, which will result in increased PM_{10} and $PM_{2.5}$ emissions. Stack parameters for this emitting unit are based on information provided by the manufacturer. These modeled parameters are similar to those historically used for the three existing units.

3.5.4 Air Makeup Units

The three existing air makeup units have been included in this model along with the proposed new air makeup unit to accurately reflect the location of these units. These units exhaust horizontally and IDEQ guidance for the modeling of horizontal release sources was followed, with sources modeled at their actual location, release heights and temperature, and the stack diameters and exhaust velocities set to 0.001 m and 0.001 m/s, respectively. Using these values prevents the model from including the effects of momentum plume rise and stack tip downwash. Stack parameters for this emitting unit are based on historical parameters used in the ambient air quality analyses. These parameters have been deemed representative by IFL.

3.5.5 Bin Dryers 1 and 2

Bin dryers 1 and 2 in the current permit are proposed to be removed from the facility and they have been included in the model with negative emissions rates to reflect the decrease in emissions associated with the removal. These dryers exhaust through the plant exhaust system and have a horizontal release. Because the plant exhaust system consists of three release points, the emissions from these units have been split equally between the three locations. IDEQ guidance for the modeling of horizontal release sources was followed, with sources modeled at their actual location, release heights and temperature, and the stack diameters and exhaust velocities set to 0.001 m and

0.001 m/s, respectively. Stack parameters for this emitting unit are based on historical parameters used in the ambient air quality analyses. These parameters have been deemed representative by IFL.

3.5.6 Proctor and Schwartz Belt Dryers

The Proctor and Schwartz Belt Dryers are proposed to be removed from the facility and they have been included in the model with negative emissions rates to reflect the decrease in emissions associated with the removal. These sources are located in the same area as the new fluid bed dryers will be installed. Stack parameters for this emitting unit are based on historical parameters used in the ambient air quality analyses. These parameters have been deemed representative by IFL.

3.5.7 Product Transfer Sources

The product transfer sources modeled include the flaker line 4 vaculift and baghouse, raw product transfer baghouse, the creamy mash cyclone exhaust and the canline vaculift. The product transfer sources included in the model were each modeled as horizontal sources. IDEQ guidance for the modeling of horizontal release sources was followed, with sources modeled at their actual location, release heights and temperature, and the stack diameters and exhaust velocities set to 0.001 m and 0.001 m/s, respectively.

4.0 AMBIENT AIR BOUNDARY

The ambient air boundary has been determined through an analysis following the four step criteria listed in the *Guideline for Performing Ambient Air Quality Impacts*. The ambient air quality boundary is shown in Figure 4-1 and was determined through the analyses that follow.

Facility Control

Facility control is maintained at the facility by fencing that outlines the facility on the north, south and west sides. This fencing prevents public access to the facility from these directions. In addition to the fencing, the facility's property is bordered by the Snake River on the east side of the property. The river acts as a barrier, restricting public access to the facility. The public is not allowed access to this industrial facility beyond the high water mark of the river. The modeling boundary has been set within the line of trees that are located near the eastern edge of the property boundary. These trees prevent IFL employees from having a clear view of that property border, and have the potential to hamper them from preventing public access to the facility.

Facility Business

The public is not invited to this facility as part of normal business operations. The ambient air boundary does not require adjustment based on this criterion.

Right-of-Way Access

There are no public roads, streams, rivers or any other public rights-of-way that intersect the facility property. There may be public access associated with the Snake River on the east side of the property, with public access up to the high water mark of the river. This was taken into account when determining the ambient air boundary along the east side of the property.

Leased Property

IFL does not lease any portion of the property within the selected ambient air boundaries to another industry, business or individual. Also, IFL owns and is not leasing the property within the ambient air boundary. The ambient air boundary does not require adjustment based on this criterion.

Figure 4-1 shows satellite imagery demonstrating the ambient air boundary of the facility, created as discussed in the previous sections.

Figure 4-1: Ambient Air Boundary Location

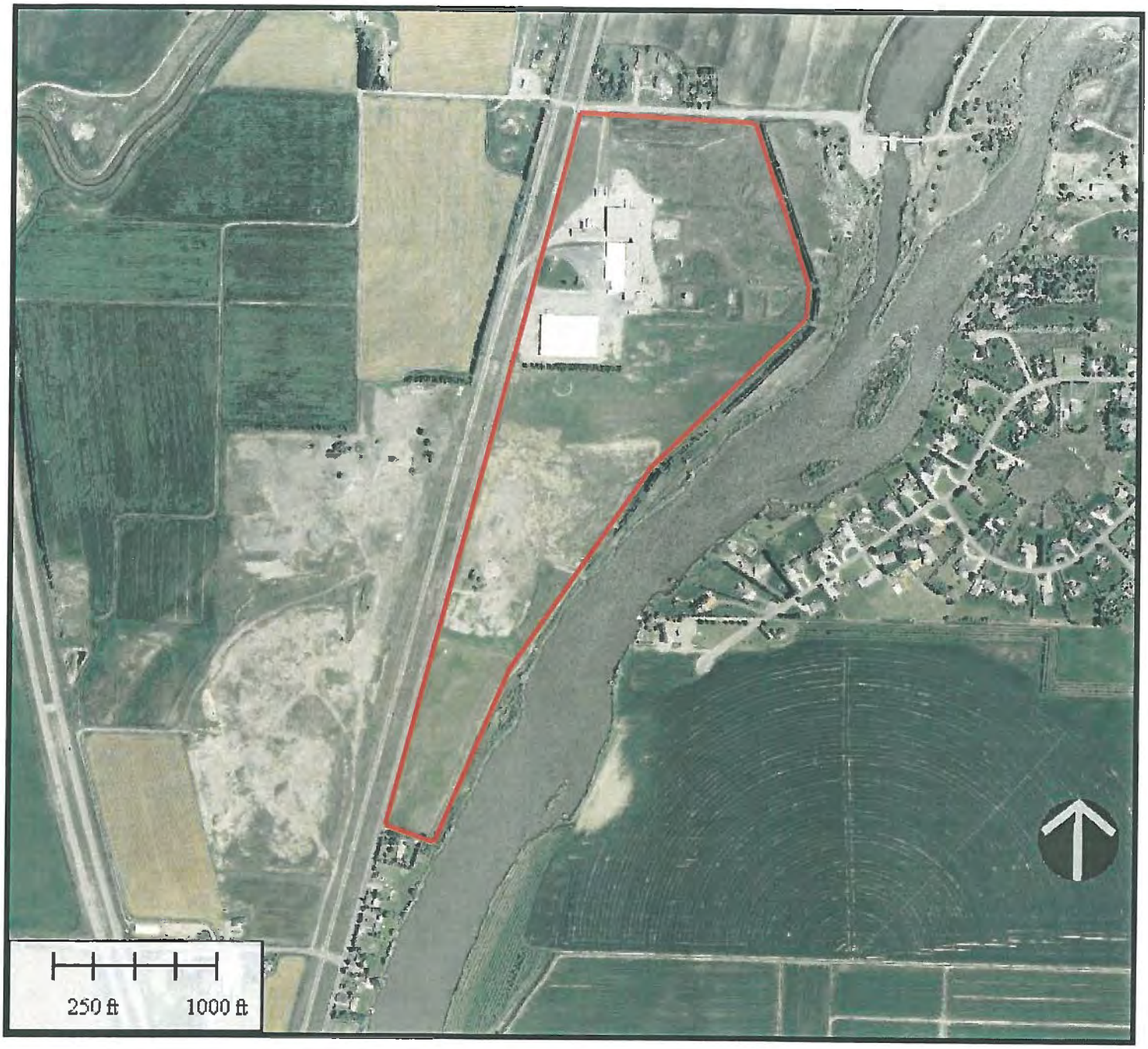

5.0 RECEPTOR NETWORK

The initial receptor grid for significant impact modeling was set up as follows:

- 50m spacing along property boundary,
- 100m spacing from property boundary to 1 km,
- 250m spacing from 1 km to 3 km,
- 500m spacing from 3 km to 10 km.

No additional receptors were required beyond 10 km, as peak impacts were not located on the outer boundary of receptors.

Initial modeling did not indicate any receptor values were approaching the significant impact levels. Based on these results, it was determined that additional "hot spot" receptors were not necessary for this demonstration.

6.0 ELEVATION DATA

Elevations of sources, buildings and receptors were determined by the AERMAP program using the USGS National Elevation Dataset (NED) files. The reference projection was NAD 83 in the Universal Transverse Mercator (UTM) grid system. The extent of NED data used was based on utilizing the "Calculate Domain" function within BEEST. This function looks outward beyond those receptors and sources and determines the extent of terrain data which would be used by AERMAP. The resultant list of 7.5 minute DEM files was used to define the extent of 1/3 arcsecond NED data required by AERMOD to calculate the required elevations.

AERMAP and NED data files used in the modeling analyses have been included on the attached CD.

7.0 METEOROLOGICAL DATA

Representative meteorological data for the years of 2000 through 2004 has been provided by IDEQ. While the data has been processed by IDEQ using a prior version of AERMET, both IDEQ and Bison consider it accurate and sufficient for use in this project.

8.0 LAND-USE CLASSIFICATION

The methodology prescribed for determining land use in Appendix D of the *Guideline for Performing Air Quality Impact Analyses* was utilized for this demonstration. Figure 8-1 displays the satellite imagery within a radius of 3 kilometers of the facility. Based on observations of satellite imagery, it is apparent the land use of greater than 50% of the area within the 3 km radius of the facility consists of type A2 and A3 land usage. The residential areas to the southeast of the facility constitute a significant portion of the land use within 3 km of the facility. This dictates that the "Rural" land use option should be specified in the AERMOD model.

Figure 8-1: Imagery for Determining Land Use Classifications

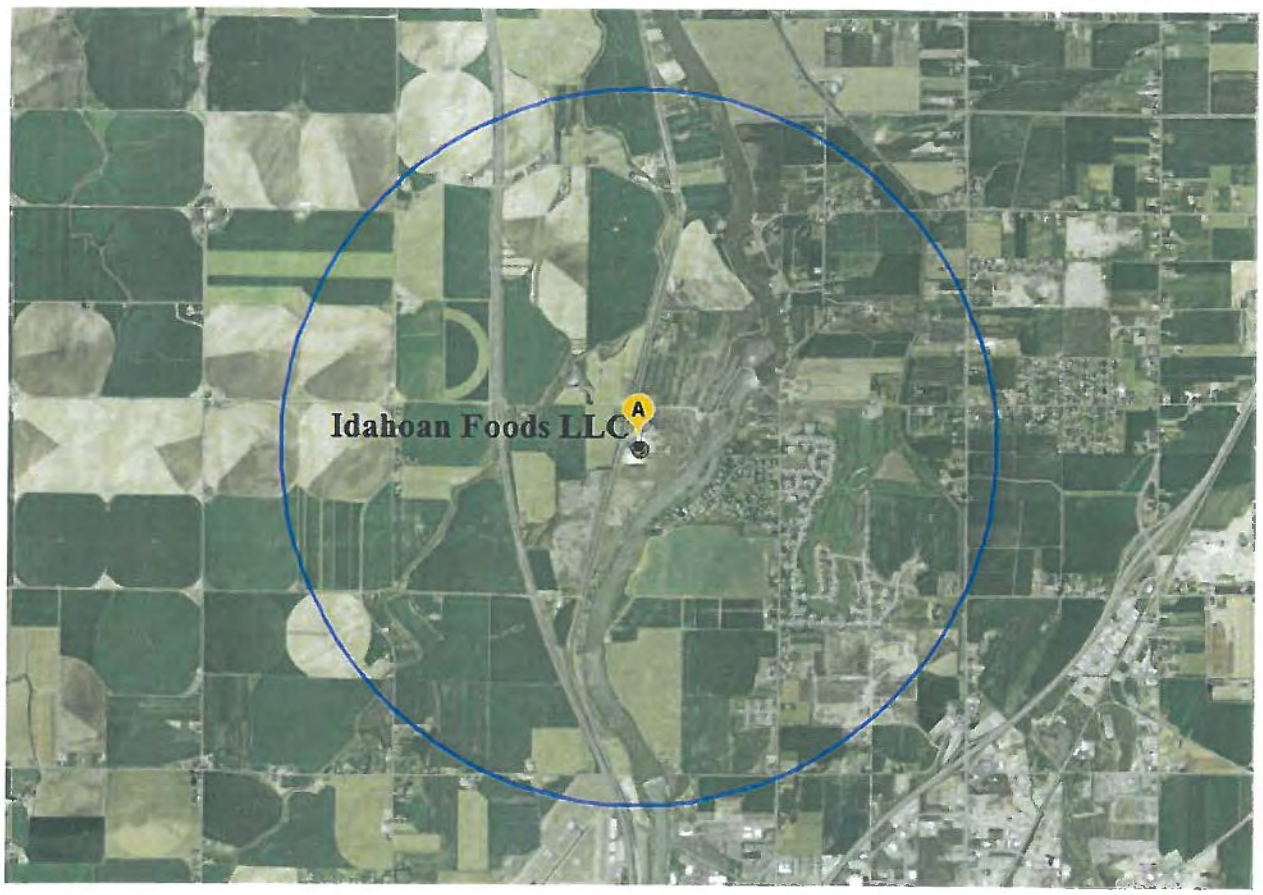

9.0 BACKGROUND CONCENTRATION

None of the modeled receptor impacts exceeds the significant impact levels for PM_{10}, $PM_{2.5}$ or NO_2 modeling. Because of this, the use background concentration was not necessary in this demonstration.

10.0 EVALUATION OF COMPLIANCE WITH STANDARDS

10.1 Modeling Threshold Analysis: Phase 1

Criteria pollutant emissions from the proposed generators were compared to the published modeling thresholds in *Guideline for Performing Ambient Air Quality Impact Analyses*. Toxic air pollutants were compared to the significant emission rates located in Idaho Air Rules Sections 585 and 596. Section 3.3 of this report details the process in which all criteria and toxic air pollutants with the exception of $PM_{2.5}$, PM_{10} and NO_x were excluded from modeling of ambient air quality impacts.

NO_2/NO_x was evaluated for both the 1-hour and annual averaging periods in the Significant Impact level (SIL) Modeling Analysis in Phase 2.

10.2 SIL Modeling Analysis: Phase 2

SILs were identified for the $PM_{2.5}$, PM_{10} and NO_x emissions and the averaging periods for which ambient air quality standards are defined. This includes 24-hour and annual for both $PM_{2.5}$ and PM_{10} as well as 1-hour and annual standards for NO_2.

Table 10-1 shows the peak modeled impacts resulting from the proposed project and compares them to the SILs. Complete model input and output data files are included on the DVD in Appendix D.

Table 10-1: Air Quality Significance Levels and Modeling Results

Pollutant	Average	Met Data	Modeling Significance Level ($\mu g/m^3$)	Modeled Impact Level ($\mu g/m^3$)	Additional Model Analysis Yes/No
NO_2	1-HR	2000-2004	7.547	x	No
NO_x	Annual	2000-2004	1	x	No
PM10	24-hr	2000-2004	5	0.998	No
PM10	Annual	2000-2004	1	0.005	No
PM2.5	24-hr	2000-2004	1.2	0.998	No
PM2.5	Annual	2000-2004	0.3	0.005	No

Comparison of the NO_2 1-hr ambient standard with the ambient air quality impacts of the facility was based on the highest hourly value each year for each receptor averaged over five years. The highest of these average peak values is compared to the NO_2 1-hr SIL. The NO2POST program from Oris Solutions was utilized to calculate this value. For comparison of impacts with annual standards, the highest modeled annual impact of the five years is compared to the annual NO_x SIL.

Comparison of the PM_{10} and $PM_{2.5}$ ambient standards with the ambient air quality impacts of the facility was based on the highest modeled impact for each averaging period during any year modeled in the five year period.

Project-related emissions result in peak impacts below any of the SILs to which emissions were being compared. Consequently, the proposed facility modifications have demonstrated that they would not result in a significant impact. Therefore, no further modeling analysis is required.

Model input and output files are included on the DVD attached to this submittal in Appendix E.

11.0 ELECTRONIC FILE DESCRIPTIONS

File Description	File Name
Significant Impact Level	Located in Submittal\SIL\BPIP Building Downwash BPIP_IFL.PIP BPIP_IFL.PRW BPIP_IFL.SO BPIP_IFL.SUM BPIP_IFL.TAB Located in Submittal\SIL\ IFL NO2 Model.BST IFL NO2 Model_20**_NO2.BND IFL NO2 Model_20**_NO2.DTA IFL NO2 Model_20**_NO2.GRF IFL NO2 Model_20**_NO2.LST IFL NO2 Model_20**_NO2.RUN IFL NO2 Model_20**_NO2.SUM NO2_POST_RESULTS.txt NO2_POST_RESULTS.grf IFL PM Model.BST IFL PM Model_20**_PM.BND IFL PM Model_20**_PM.DTA IFL PM Model_20**_PM.GRF IFL PM Model_20**_PM.LST IFL PM Model_20**_PM.RUN IFL PM Model_20**_PM.SUM
Meteorological Data Files	Located in Submittal\AERMET Located in Submittal\AERMET IDFROB.20**.PFL IDFROB.20**.SFC
Digital Terrain Files NED 1/3 GeoTIFF	**Located in Submittal\AERMAP** AERMAP Files MAPPARAMS.txt MAPDETAIL IFL_AERMAP.MAP IFL_AERMAP.Mot IFL_AERMAP.rcf IFL_AERMAP.Rmp IFL_AERMAP.srf

	Submittal\AERMAP\NED 01173475 02935989 14909936 15461997 16342165 26232664 30387537 33232387 41829568 46108324 55990607 59457300 65945336 76607963 79140764 90202023 Note: File names are assigned by USGS download job not descriptive of area downloaded.

APPENDIX A: EMISSION INVENTORY AND MODELING PARAMETER TABLES

Table A-1: Pre-Project Potential to Emit for NSR Regulated Pollutants

Emissions Unit	$PM_{2.5}$[a]		PM_{10}		SO2		NOX		VOC		CO	
	lb/hr	T/yr	lb/hr	T/yr	lb/hr	T/yr	lb/hr	T/yr	lb/hr	T/yr	lb/hr	T/yr
Boiler No. 1	5.10	22.30	5.10	22.30	31.90	93.90	13.50	52.90	0.30	1.50	10.30	45.30
Boiler No. 2	0.40	1.80	0.40	1.80	0.02	0.10	0.02	17.50	0.15	0.60	4.50	19.60
Bin Dryers (2)	0.10	0.42	0.10	0.42	0.00	0.02	0.95	4.14	0.03	0.15	1.06	4.64
Dryer, Proctor and Schwartz, Belt Type: Combined Emissions Dryers Nos. 1-3	2.48	10.81	2.48	10.81	0.00	0.00	0.00	0.00	0.00	0.00	0.00	0.00
Dryer Flaker/Drum Type, Nos. 1-3	5.88	25.80	5.88	25.80	0.00	0.00	0.00	0.00	0.00	0.00	0.00	0.00
Air Makeup Units (3)	0.20	0.67	0.20	0.67	0.01	0.03	0.97	4.26	0.05	0.23	0.82	3.58
Bag Room Vaculift, Can Line Vaculift	0.08	0.35	0.08	0.35	0.00	0.00	0.00	0.00	0.00	0.00	0.00	0.00
Flaker Lines 1 & 2 Vaculift	0.17	0.73	0.17	0.73	0.00	0.00	0.00	0.00	0.00	0.00	0.00	0.00
Flaker Line 3 Vaculift	0.14	0.63	0.14	0.63	0.00	0.00	0.00	0.00	0.00	0.00	0.00	0.00
Totals	14.55	63.51	14.55	63.51	31.93	94.05	19.96	78.80	0.53	2.48	17.54	73.12

[a]PM2.5 emissions were not speciated out from PM10 emissions. To be conservative, they are assumed to be 100% of PM10 emissions.

Table A-2: Post-Project Potential to Emit for NSR Regulated Pollutants

Emissions Unit	$PM_{2.5}$[a]		PM_{10}		SO2		NOX		VOC		CO	
	lb/hr	T/yr	lb/hr	T/yr	lb/hr	T/yr	lb/hr	T/yr	lb/hr	T/yr	lb/hr	T/yr
Boiler No. 1	0.45	1.98	0.45	1.98	3.65E-02	0.16	5.94	26.03	0.33	1.43	4.99	21.87
Boiler No. 2	4.00E-01	1.80	4.00E-01	1.80	2.00E-02	1.00E-01	0.02	17.50	0.15	0.60	4.50	19.60
Bin Dryers (2)[b]	0.00	0.00	0.00	0.00	0.00	0.00	0.00	0.00	0.00	0.00	0.00	0.00
Dryer, Proctor and Schwartz, Belt Type: Combined Emissions Dryers Nos. 1-3[b]	0.00	0.00	0.00	0.00	0.00	0.00	0.00	0.00	0.00	0.00	0.00	0.00
Dryer Flaker/Drum Type, Nos. 1-4	1.03E+01	44.90	1.03E+01	44.90	0.00	0.00	0.00	0.00	0.00	0.00	0.00	0.00
Air Makeup Units (4)	0.11	0.50	0.11	0.50	9.13E-03	4.00E-02	1.51	6.60	8.29E-02	0.36	1.27	5.55
Bag Room Vaculift, Can Line Vaculift[b]	0.00	0.00	0.00	0.00	0.00	0.00	0.00	0.00	0.00	0.00	0.00	0.00
Flaker Lines 1 & 2 Vaculift	5.16E-01	2.26E+00	5.16E-01	2.26E+00	0.00	0.00	0.00	0.00	0.00	0.00	0.00	0.00
Flaker Lines 3 Vaculift	2.47E-01	1.08E+00	2.47E-01	1.08E+00	0.00	0.00	0.00	0.00	0.00	0.00	0.00	0.00
Flaker line 4 Vaculift & Baghouse		9.86E-04		9.86E-04								
Dryer, Fluid Bed: Combined Emissions Real Lines 1-2	4.51	19.76	4.51	19.76	1.14E-02	5.00E-02	1.95	8.52	0.11	0.47	1.63	7.16
Baghouse Product Transfer Raw	1.13E-02	0.05	1.13E-02	0.05	0.00	0.00	0.00	0.00	0.00	0.00	0.00	0.00
Baghouse Exhaust Dust Collector System	1.03E-10	4.50E-10	1.03E-10	4.50E-10	0.00	0.00	0.00	0.00	0.00	0.00	0.00	0.00
Baghouse Finished Product Transfer, Creamy Mash	4.50E-03	1.97E-02	4.50E-03	1.97E-02	0.00	0.00	0.00	0.00	0.00	0.00	0.00	0.00
Bag Room Packaging	1.13E-02	4.94E-02	1.13E-02	4.94E-02	0.00	0.00	0.00	0.00	0.00	0.00	0.00	0.00
Totals	16.52	72.40	16.52	72.40	0.08	0.35	9.41	58.65	0.67	2.86	12.39	54.18

[a]PM2.5 emissions were not speciated out from PM10 emissions. To be conservative, they are assumed to be 100% of PM10 emissions.

[b]Emitting unit will be removed from the facility.

[c]Emitting unit is a proposed new unit at the facility

Table A-3: Change in Emission Rates from Pre-project to Post-project[a]

Emissions Unit	$PM_{2.5}$[a]		PM_{10}		SO2		NOX		VOC		CO	
	lb/hr	T/yr	lb/hr	T/yr	lb/hr	T/yr	lb/hr	T/yr	lb/hr	T/yr	lb/hr	T/yr
Boiler No. 1	-4.65	-20.32	-4.65	-20.32	-3.19E+01	-93.74	-7.56	-26.87	0.03	-0.07	-5.31	-23.43
Boiler No. 2	0.00E+00	0.00E+00	0.00E+00	0.00E+00	0.00E+00	0.00E+00	0.00	0.00	0.00	0.00	0.00	0.00
Bin Dryers (2)b	-0.10	-0.42	-0.10	-0.42	0.00	-0.02	-0.95	-4.14	-0.03	-0.15	-1.06	-4.64
Dryer, Proctor and Schwartz, Belt Type: Combined Emissions Dryers Nos. 1-3b	-2.48	-10.81	-2.48	-10.81	0.00	0.00	0.00	0.00	0.00	0.00	0.00	0.00
Dryer Flaker/Drum Type, Nos. 1-4	4.37	19.10	4.37	19.10	0.00	0.00	0.00	0.00	0.00	0.00	0.00	0.00
Air Makeup Units (4)	-0.09	-0.17	-0.09	-0.17	2.13E-03	1.00E-02	0.53	2.34	2.95E-02	0.13	0.45	1.97
Bag Room Vaculift, Can Line Vaculiftb	-0.08	-0.35	-0.08	-0.35	0.00	0.00	0.00	0.00	0.00	0.00	0.00	0.00
Flaker Lines 1 & 2 Vaculift	0.35	1.53	0.35	1.53	0.00	0.00	0.00	0.00	0.00	0.00	0.00	0.00
Flaker Lines 3 Vaculift	0.11	0.45	0.11	0.45	0.00	0.00	0.00	0.00	0.00	0.00	0.00	0.00
Flaker line 4 Vaculift & Baghouse	0.00	0.00	0.00	0.00	0.00	0.00	0.00	0.00	0.00	0.00	0.00	0.00
Dryer, Fluid Bed: Combined Emissions Real Lines 1-2	4.51	19.76	4.51	19.76	1.14E-02	5.00E-02	1.95	8.52	0.11	0.47	1.63	7.16
Baghouse Product Transfer Raw	1.13E-02	0.05	1.13E-02	0.05	0.00	0.00	0.00	0.00	0.00	0.00	0.00	0.00
Baghouse Exhaust Dust Collector System	1.03E-10	4.50E-10	1.03E-10	4.50E-10	0.00	0.00	0.00	0.00	0.00	0.00	0.00	0.00
Baghouse Finished Product Transfer, Creamy Mash	4.50E-03	1.97E-02	4.50E-03	1.97E-02	0.00	0.00	0.00	0.00	0.00	0.00	0.00	0.00
Bag Room Packaging	1.13E-02	4.94E-02	1.13E-02	4.94E-02	0.00	0.00	0.00	0.00	0.00	0.00	0.00	0.00
Totals Net Change	1.97	8.89	1.97	8.89	-31.85	-93.70	-6.03	-20.15	0.13	0.38	-4.28	-18.94
Total Increase Only	11.33	49.85	11.33	49.85	0.01	0.06	2.48	10.86	0.30	0.98	2.08	9.13
Level I Thresholds	0.054	0.35	0.22	---	0.21	1.2	0.2	1.2	---	---	15	---
Level II Thresholds	0.63	4.1	2.6	---	2.5	14	2.4	14	---	---	175	---
Over Level I Threshold?	Yes	Yes	Yes	No	No	No	Yes	Yes	No	No	No	No
Over Level II Threshold?	Yes	Yes	Yes	No	No	No	Yes	No	No	No	No	No

[a]PM2.5 emissions were not speciated out from PM10 emissions. To be conservative, they are assumed to be 100% of PM10 emissions.

[b]Emitting unit will be removed from the facility.

[c]Emitting unit is a proposed new unit at the facility

Table A-4: Emitting Unit Modeling Parameters

Parameter	Emitting Unit																	
	Boiler No.1 (NG)	Flaker 4	Flaker Line 4 Vaculift & Baghouse	Plant Exhaust 1	Plant Exhaust 2	Plant Exhaust 3	Air Makeup Unit 1	Air Makeup Unit 2	Air Makeup Unit 3	Air Makeup Unit 4	Product Transfer, Raw	Baghouse Finished Product Transfer, Creamy Mash	Real Line #1 Fluidized Bed Dryer (natural gas-fired)	Real Line #2 Fluidized Bed Dryer (natural gas-fired)	Belt Dryer 1	Belt Dryer 2	Belt Dryer 3	Can Line Vaculift
Model Identifier	BOILER1	FLAKER4	FL_4	PLANT1	PLANT2	PLANT3	AMU1	AMU2	AMU3	AMU4	CM_TLS	FP_CM	FLUIDBED1	FLUIDBED2	PROCT_1	PROCT_2	PROCT_3	CL_VAC
Emission Rate (g/s)	-0.58	0.32	0.00	0.00	0.00	0.00	0.00	0.00	0.00	0.01	0.00	0.00	0.28	0.28	-0.10	-0.10	-0.10	-0.01
Stack Height (m)	11.90	12.80	12.80	8.23	8.23	8.23	8.23	8.23	8.23	8.23	10.97	7.93	12.80	12.80	8.53	8.53	8.53	8.53
Stack Diameter (m)	1.040	1.219	0.001	0.001	0.001	0.001	0.001	0.001	0.001	0.001	0.001	0.001	1.280	1.280	0.001	0.001	0.001	0.001
Exit Temperature (K)	472.0	316.5	316.5	313.7	313.7	313.7	313.7	313.7	313.7	313.7	302.6	302.6	344.3	344.3	355.0	355.0	355.0	0.0
Exit Velocity (m/s)	8.44	8.08	0.00	0.00	0.00	0.00	0.00	0.00	0.00	0.00	0.00	0.00	18.66	18.66	0.00	0.00	0.00	0.00
Easting (X)	414634	414620	414624	414594	414601	414607	414622	414614	414628	414584	414581	414584	414598	414603	414596	414601	414606	414617
Northing (Y)	4822443	4822490	4822500	4822521	4822521	4822521	4822476	4822493	4822546	4822607	4822542	4822542	4822507	4822507	4822506	4822506	4822506	4822517
Base Elevation (m)	1446.0	1445.6	1445.9	1442.0	1442.0	1442.0	1445.2	1445.7	1446.3	1445.8	1445.8	1445.5	1446.0	1446.0	1445.9	1446.0	1446.0	1446.1

APPENDIX B: TAPS ANALYSIS

Idahoan Foods, LLC

Toxic Air Pollutants and HAPs Summary Information

CAS#	CAS# (No Hyphens)	Toxic Air Pollutant	Maximum Emission Rate (lbs/hr)	Maximum Emission Rate (tpy)	Idaho Air Quality Rules Emission Rate Threshold	Below IDAPA Section 585 or 586 Criteria	Level of Regulatory Concern	Below Level of Regulatory Concern?	HAP	PAH/POM[b]
71-55-6	71556	1,1,1-Trichloroethane (aka Methly Chloroform)	-6.5E-05	-2.9E-04	127	Yes	12.7	Yes	Yes	No
91-57-6	91576	2-Methylnaphthalene	0.0000	0.0000					Yes	No[d]
56-49-5	56495	3-Methylchloranthrene	0.0000	0.0000					Yes	No[d]
		7,12-Dimethylbenz(a)anthracene	0.0000	0.0000					Yes	No[d]
83-32-9	83329	Acenaphthene	0.0000	0.0000					Yes	No[d]
208-96-8	208968	Acenaphthylene	0.0000	0.0000	-	Yes	0.00E+00	Yes	No	No
120-12-7	120127	Anthracene	0.0000	0.0000					Yes	No[d]
71-43-2	71432	Benzene	0.0000	0.0002	8.00E-04	Yes	0.00008	Yes	Yes	No
56-55-3	56553	Benz(a)anthracene[b]	0.0000	0.0000	9.10E-05	Yes	0.0000091	Yes	Yes	Yes
205-99-2, 205-82-3	205992, 205823	Benzo(b,k)fluoranthene[b]	0.0000	0.0000	9.10E-05	Yes	0.0000091	Yes	Yes	Yes
191-24-2	191242	Benzo(g,h,i)perylene	0.0000	0.0000					Yes	No[d]
50-32-8	50328	Benzo(a)pyrene[b]	0.0000	0.0000	9.10E-05	Yes	0.0000091	Yes	Yes	Yes
106-97-8	106378	Butane	0.1059	0.4637					No	No
7440-47-3	7440473	chromium III (particulate)	-4.94E-05	-2.16E-04	0.033	Yes	0.0033	Yes	Yes	No
218-01-9	218019	Chrysene[b]	-5.66E-07	-2.48E-06	9.10E-05	Yes	0.0000091	Yes	Yes	Yes
53-70-3	53703	Dibenzo(a,h) anthracene[b]	0.0000	0.0000	9.10E-05	Yes	0.0000091	Yes	Yes	Yes
25321-22-6	25321226	Dichlorobenzene	0.0001	0.0003	0.00E+00	Yes	0	Yes	Yes	No
74-84-0	74840	Ethane	0.1363	0.6845					No	No
86-73-7	86737	Fluorene	0.0000	0.0000				Yes	Yes	No[d]
50-00-0	50000	Formaldehyde	-5.32E-03	-0.0233	9.10E-04	Yes	0.000051	Yes	Yes	No
193-39-5	193395	Indo(1,2,3-cd)pyrene[b]	0.0000	0.0000	9.10E-05	Yes	0.0000091	Yes	Yes	Yes
3268-87-9	3268879	OCDD[c]	0.0000	0.0000	1.50E-10	Yes	NA	Yes	No	No
110-54-3	110543	n-hexane	0.0907	0.3975	12	Yes	1.2	Yes	Yes	No
91-20-3	91203	Naphthalene	-0.0003	-0.0012	3.33	Yes	0.333	Yes	Yes	No
109-66-0	109660	Pentane	0.1311	0.5741	118	Yes	11.8	Yes	No	No
85-01-8	85018	Phenanthrene	0.0000	0.0000					Yes	No[d]
74-98-6	74986	Propane	0.0907	0.3533					No	No
129-00-0	129000	Pyrene	0.0000	0.0000					Yes	No[d]
108-88-3	108883	Toluene	-0.0015	-0.0067	25	Yes	2.5	Yes	Yes	No
1330-20-7	1330207	Xylene	0.0000	-0.0001	29	Yes	2.9	Yes	Yes	No
7440-38-2	7440382	Arsenic (As)	-1.50E-04	-6.57E-04	1.50E-06	Yes	1.50E-07	Yes	Yes	No
7440-39-3	7440393	Barium (Ba)	2.22E-04	9.72E-04	3.30E-02	Yes	3.30E-03	Yes	No	No
7440-41-7	7440417	Beryllium (Be)	-1.19E-04	-5.21E-04	2.80E-05	Yes	2.80E-06	Yes	Yes	No
7440-43-9	7440439	Cadmium (Cd)	-6.45E-05	-2.83E-04	3.70E-06	Yes	3.70E-07	Yes	Yes	No
7440-48-4	7440484	Cobal (Co)	4.23E-06	1.85E-05	3E-03	Yes	3.30E-04	Yes	Yes	No
7440-50-8	7440508	Copper (Cu)	-1.97E-04	-8.64E-04	3E-02	Yes	1.30E-03	Yes	No	No
7439-96-5	7439965	Manganese (Mn)	-2.21E-04	-9.67E-04	7E-02	Yes	6.70E-03	Yes	Yes	No
7439-97-6	7439976	Mercury (Hg)[a]	1.15E-01	5.74E-05	2.9E+01	Yes	2.90E+00	Yes	Yes	No
7439-98-7	7439987	Molybdenum (Mo)	5.55E-05	2.43E-04	3E-01	Yes	3.33E-02	Yes	No	No
7440-02-0	7440020	Nickel (Ni)	-1.41E-05	-6.19E-05	3E-05	Yes	2.70E-06	Yes	Yes	No
7782-49-2	7782492	Selenium (Se)	-5.99E-04	-2.62E-03	1E-02	Yes	1.30E-03	Yes	Yes	No
7440-62-2	7440622	Vanadium (V)	1.16E-04	5.08E-04	3E-03	Yes	3.00E-04	Yes	No	No
7440-66-6	7440666	Zinc (Zn)	1.30E-03	5.70E-03	7E-01	Yes	6.67E-02	Yes	No	No

Total PAH/POMs

lbs/hr	-2.65E-06
Tons/year	-1.16E-05
IDAPA Threshold (lbs/hr)	0.000091
Meet Threshold	Yes

Total HAPs

lbs/hr	0.20
Tons/year	0.36
Below 25 tpy total:	Yes
Max Single HAP:	Xylene
Max Single HAP Emission	0.40
Meet Less than 10 tpy for any single HAP?	Yes

Notes

[a] Hg standard is in lbs/year.

PAH/POM for comparison to emission threshold in IDAPA 58.01.01.585. Polycyclic Organic Matter (POM) is considered as one TAP comprised of: benzo(a)anthracene, benzo(b)fluoranthene, benzo(k)fluoranthene, dibenzo(a,h)anthracene, chrysene,
[b] Indeno(1,2,3-cd)pyrene, benzo(a)pyrene. The total is compared to benzo(a)pyrene.
[c] Used emission level of 2,3,7,8, -TCDD for screening.
[d] Not equivalent to listed PAH/POM mixtures in IDAPA 58.01.01.586

Idahoan Foods, LLC
Fuel Oil Combustion - HAPs and TAPs

Hours of Operation: 8760

Building Heaters
AP-42 Chapter 1.3 Fuel Oil Combustion

Emitting Unit	Heat Rate (Btu/hr)	Heat Rate (mmBtu/hr)	Heat Rate (TBtu/hr)	Diesel Usage (gal/hr)[a]	Diesel Usage (10^3 gal/hr)[a]
Boiler #1 Fuel Oil Combustion	-40000000	-40.00	-4.00E-05	-275.9	-0.2759
Total:	-40000000	-40.00	-4.00E-05	-275.9	-0.2759

Speciated Organic Compounds from Diesel Combustion Emission Factors

CAS	Pollutant	Emission Factor	Source	Emissions (lbs/hr)	Emissions (tpy)	Listed in Table 88.1 of 586.1 of IDAPA	IDAPA Emission Limit (lb/hr)	Source Meet Emission Level?
71-43-2	Benzene	2.14E-04 lb/10^3 gal	Table 1.3-9	-5.9E-05	-7.6E-04	586	8.00E-04	Yes
100-41-4	Ethylbenzene	6.36E-05 lb/10^3 gal	Table 1.3-9	-1.8E-05	-7.7E-05	586	29	Yes
50-00-0	Formaldehyde	3.30E-04 lb/10^3 gal	Table 1.3-9	-9.1E-05	-4.0E-02	586	5.10E-04	Yes
91-20-3	Naphthalene	1.13E-04 lb/10^3 gal	Table 1.3-9	-3.1E-05	-1.4E-03	586	3.33	Yes
71-55-6	1,1,1-Trichloroethane (aka Methyl Chloroform)	3.19E-04 lb/10^3 gal	Table 1.3-9	-8.8E-05	-2.9E-04	586	127	Yes
108-88-3	Toluene	4.09E-04 lb/10^3 gal	Table 1.3-9	-1.1E-04	-7.5E-03	586	24	Yes
1330-20-7	o-Xylene	1.09E-04 lb/10^3 gal	Table 1.3-9	-3.0E-05	-1.3E-04	586	32	Yes
83-32-9	Acenaphthene*	2.71E-05 lb/10^3 gal	Table 1.3-9	-8.6E-06	-2.5E-05	No	-	NA
208-96-8	Acenaphthylene	2.53E-07 lb/10^3 gal	Table 1.3-9	-7.8E-08	-3.1E-07	No	-	NA
120-12-7	Anthracene*	1.25E-06 lb/10^3 gal	Table 1.3-9	-3.963E-07	-1.4741E-06	No	-	NA
56-55-3	Benz(a)anthracene*	4.01E-06 lb/10^3 gal	Table 1.3-9	-1.1E-06	-4.8E-06	586	9.10E-05	See POM/PAH Summary Below
205-99-2, 205-82-3	Benzo(b,k)fluoranthene*	1.48E-06 lb/10^3 gal	Table 1.3-9	-4.1E-07	-1.8E-07	586	9.10E-05	See POM/PAH Summary Below
191-24-2	Benzo(g,h,i)perylene*	2.81E-06 lb/10^3 gal	Table 1.3-9	-8.2344E-07	-2.7307E-06	No	-	NA
218-01-9	Chrysene*	2.36E-06 lb/10^3 gal	Table 1.3-9	-6.8E-07	-2.9E-06	586	9.10E-05	See POM/PAH Summary Below
53-70-3	Dibenz(a,h) anthracene*	1.67E-06 lb/10^3 gal	Table 1.3-9	-4.8E-07	-2.0E-06	586	9.10E-05	See POM/PAH Summary Below
206-44-0	Fluoranthene*	4.84E-06 lb/10^3 gal	Table 1.3-9	-1.3931E-06	-5.8450E-06	No	-	NA
86-73-7	Fluorene*	4.47E-06 lb/10^3 gal	Table 1.3-9	-1.2E-06	-5.4E-06	No	-	NA
193-39-5	Indo(1,2,3-cd)pyrene*	2.14E-06 lb/10^3 gal	Table 1.3-9	-6.9E-07	-2.9E-07	586	9.10E-05	See POM/PAH Summary Below
85-01-8	Phenanthrene*	1.65E-05 lb/10^3 gal	Table 1.3-9	-2.8667E-06	-1.2681E-05	No	-	NA
129-00-0	Pyrene*	4.55E-06 lb/10^3 gal	Table 1.3-9	-1.17241E-06	-3.13317E-06	No	-	NA
3268-87-9	OCDD*	3.10E-09 lb/10^3 gal	Table 1.3-9	-9.99172E-10	-3.74686E-09	586	1.60E-10	Yes

PAH or POM in listed in IDAPA 58.01.01.586.	Emissions (tpy)	Sum PAH Standard (lb/hr)	Source Meets PAH Standard?
	-3.1E-06	9.10E-05	Yes

Metals from Diesel Combustion Emission Factors

CAS	Pollutant	Emitted as Particulate or Gas	Emission Factor	Source	Emissions (lbs/hr)[a]	Emissions (tpy)	Listed in Table 586 of 586 of IDAPA	IDAPA Emission Level (lb/hr)[a]	Source Meet Emission Level?
7440-38-2	Arsenic (As)	Particulate[e]	4lb/TBtu	Table 1.3-10	-1.6E-04	-7.2E-04	586	1.[illegible]E-06	Yes
440-41-7	Beryllium (Be)	Particulate[e]	3lb/TBtu	Table 1.3-10	-1.2E-04	-5.3E-04	586	2.80E-05	Yes
7440-43-9	Cadmium (Cd)	Particulate[e]	3lb/TBtu	Table 1.3-10	-1.2E-04	-5.3E-04	586	3.70E-06	Yes
7440-47-3	Chromium (Cr)	Particulate[e]	3lb/TBtu	Table 1.3-10	-1.2E-04	-5.3E-04	586	8.[illegible]	Yes
7440-50-8	Copper (Cu)[f]	Particulate[e]	8lb/TBtu	Table 1.3-10	-2.4E-04	-1.1E-03	586	0.013	Yes
7439-92-1	Lead (Pb) - Accounted for with Criteria Pollutants	Particulate[e]	9lb/TBtu	Table 1.3-10	-2.8E-04	-1.2E-03	NA	NA	NA
7439-97-6	Mercury[g] (Hg)	Gas[e]	3lb/TBtu	Table 1.3-10	-1.2E-04	-5.3E-04	See note g.	25	Yes
7439-96-5	Manganese (Mn)	Particulate[e]	85lb/TBtu	Table 1.3-10	-2.4E-04	-1.1E-03	586	6.70E-02	Yes
7440-02-0	Nickel (Ni)	Particulate[e]	3lb/TBtu	Table 1.3-10	-1.2E-04	-5.3E-04	586	2.70E-03	Yes
7782-49-2	Selenium (Se)	Particulate[e]	15lb/TBtu	Table 1.3-10	-4.6E-04	-2.0E-03	586	1.30E-02	Yes
7440-66-6	Zinc (Zn)	Particulate[e]	4lb/TBtu	Table 1.3-10	-1.2E-04	-7.2E-04	586	6.67E-01	Yes

Notes:

[a] Calculated, based on fuel oil heat content of 145,000 Btu/gal
[b] PAH/POM for comparison to emission threshold in IDAPA 58.01.01.586.
[c] Used emission level of 2,3,7,8, -TCDD for screening.
[d] Hg standard in lbs/year for compliance with IDAPA 58.01.01.218 standard of 25 lbs/year.
[e] Per Table 4-11 of Report on Revisions to 5th Edition AP-42 Section 1.3 Fuel Oil Combustion, page 4-44.
[f] Based on copper boiling point of 2835 K.
[g] Based on selenium boiling point of 958 K.
[h] POM per AP-42.

Idahoan Foods, LLC

Natural Gas Combustion - HAPs and TAPs

Hours of Operation (Max): 8760
Fuel Type: Natural Gas
Natural Gas Heating Value (btu/scf): 1000 AP-42 Appendix A

Building Heaters
AP-42 Chapter 1.4 Natural Gas Combustion

Emissions Unit	Fuel Usage (scf/hr)	Fuel Usage (10^9 scf/hr)	Fuel Usage (10^9 scf/year)
Fluid Bed Dryers (2)	19350.00	0.01935	169.51
Air Makeup Unit	2418.00	0.00242	21.18
Drum Dryer	-9450.00	-0.00945	-82.78
Boiler #1 Natural Gas Use	33095.24	0.03310	289.71
Total:	50413.24	0.0504	441.62

Speciated Organic Compounds from Natural Gas Combustion Emission Factors

CAS #:	Pollutant	Natural Gas		Emissions (lbs/hr)	Emissions (tpy)	POM/PAH?	Listed HAP in Section 112(b) of Clean Air Act per AP-42 1.4	Listed per IDAPA 58.01.01.585	IDAPA 58.01.01.585 Emission Level (lbs/hr)	Meets IDAPA 58.01.01.585 Emission Level?	Listed per IDAPA 58.01.01.5 85	IDAPA 58.01.01.5 85 Emission Level (lbs/hr)	Meets IDAPA 58.01.01.5858 Emission Level?
91-57-6	2-Methylnaphthalene*	2.40E-05	lb/10^6 scf	1.2E-08	5.2E-08	AP-42	Yes	No		NA	No	NA	NA
56-49-5	3-Methylchloranthrene	1.80E-06	lb/10^6 scf	9.1E-09	4.0E-07	AP-42	Yes	No	-	NA	Yes	2.50E-06	Yes
	7,12-Dimethylbenz(a)anthracene*	1.60E-05	lb/10^6 scf	8.1E-07	3.5E-06	AP-42	Yes	No	-	NA	No		NA
83-32-9	Acenaphthene*	1.80E-06	lb/10^6 scf	9.1E-09	4.0E-07	AP-42	Yes	No	-	NA	No		NA
120-12-7	Anthracene*	2.40E-06	lb/10^6 scf	1.2E-07	5.2E-07	AP-42	Yes	No	-	NA	No		NA
56-55-3	Benz(a)anthracene*	1.80E-06	lb/10^6 scf	9.1E-09	4.0E-07	AP-42 and Idaho Rules	Yes	No	-	NA	Yes - PAH	8.10E-05	See POM/PAH Summary Below
71-43-2	Benzene	2.10E-03	lb/10^6 scf	1.1E-04	4.9E-04	No	Yes	No	-	NA	Yes	8.00E-04	Yes
50-32-8	Benzo(a)pyrene*	1.20E-06	lb/10^6 scf	6.0E-09	2.6E-07	AP-42 and Idaho Rules	Yes	No	-	NA	Yes	2.00E-06	Yes
205-99-2	Benzo(b)fluoranthene*	1.80E-06	lb/10^6 scf	9.1E-09	4.0E-07	AP-42 and Idaho Rules	Yes	No	-	NA	Yes - PAH	9.10E-05	See POM/PAH Summary Below
191-24-2	Benzo(g,h,i)perylene*	1.20E-06	lb/10^6 scf	6.0E-09	2.6E-07	AP-42	Yes	No	-	NA	No		NA
205-82-3	Benzo(k)fluoranthene	1.80E-06	lb/10^6 scf	9.1E-09	4.0E-07	AP-42 and Idaho Rules	Yes	No	-	NA	Yes - PAH	9.10E-05	See POM/PAH Summary Below
106-97-8	Butane	2.10E-03	lb/10^6 scf	1.1E-01	4.9E-01	No	No	No	-	NA	No		NA
218-01-9	Chrysene*	1.80E-06	lb/10^6 scf	9.1E-09	4.0E-07	AP-42 and Idaho Rules	Yes	No	-	NA	Yes - PAH	9.10E-05	See POM/PAH Summary Below
53-70-3	Dibenz(a,h)anthracene*	1.20E-06	lb/10^6 scf	6.0E-09	2.6E-07	AP-42 and Idaho Rules	Yes	No	-	NA	Yes - PAH	9.10E-05	See POM/PAH Summary Below
25321-22-6	Dichlorobenzene	1.20E-03	lb/10^6 scf	6.0E-06	2.6E-05	No	Yes	No	-	NA	No		NA
74-84-0	Ethane	3.10E+00	lb/10^6 scf	1.6E-01	6.8E-01	No	No	No	-	NA	No		NA
206-44-0	Fluoranthene*	3.00E-06	lb/10^6 scf	1.5E-08	6.6E-07	AP-42	Yes	No	-	NA	No		NA
86-73-7	Fluorene*	2.80E-06	lb/10^6 scf	1.4E-08	6.2E-07	AP-42	Yes	No	-	NA	No		NA
50-00-0	Formaldehyde	7.50E-02	lb/10^6 scf	3.8E-03	1.7E-02	No	Yes	No	-	NA	Yes	5.10E-04	No
110-54-3	Hexane	1.80E+00	lb/10^6 scf	9.1E-02	4.0E-01	No	Yes	Yes	13	Yes	No		NA
193-39-5	Indeno(1,2,3-cd)pyrene*	1.80E-06	lb/10^6 scf	9.1E-09	4.0E-07	AP-42 and Idaho Rules	Yes	No	-	NA	Yes - PAH	9.10E-05	See POM/PAH Summary Below
91-20-3	Naphthalene	6.10E-04	lb/10^6 scf	3.1E-07	1.3E-06	No	Yes	Yes	3.38	Yes	No		NA
109-66-0	Pentane	2.60E+00	lb/10^6 scf	1.3E-01	5.7E-01	No	No	Yes	115	Yes	No		NA
85-01-8	Phenanthrene*	1.70E-05	lb/10^6 scf	8.6E-08	3.8E-06	AP-42	Yes	No	-	NA	No		NA
74-98-6	Propane	1.6	lb/10^6 scf	8.1E-02	3.5E-01	No	No	No	-	NA	No		NA
129-00-0	Pyrene*	5.00E-06	lb/10^6 scf	2.5E-07	1.1E-06	AP-42	Yes	No	-	NA	No		NA
108-88-3	Toluene	3.40E-03	lb/10^6 scf	1.7E-04	7.5E-04	No	Yes	Yes	22	Yes	No		NA
				lbs/hr	Idaho PAH Standard (lb/hr)	Source Meets PAH Standard?							
			PAH or POM in listed in IDAPA 58.01.01.585.	5.7E-07	9.10E-05	Yes							

Idahoan Foods, LLC

Natural Gas Combustion - HAPs and TAPs

Metals from Natural Combustion Emission Factors

CAS #:	Pollutant	Natural Gas	Emissions (lbs/hr)	Emissions (lbs/year)	Emissions (tpy)	Listed HAP in Section 112(b) of Clean Air Act per AP-42 1.4	Listed per IDAPA 58.01.01.585	IDAPA 58.01.01.586 Emission Level (lbs/hr)	Meets IDAPA 58.01.01.585 Emission Level?	Listed per IDAPA 58.01.01.5 86	IDAPA 58.01.01.5 86 Emission Level (lbs/hr)	Meets IDAPA 58.01.01.5856 Emission Level?
7440-38-2	Arsenic	2.00E-04 lb/10^6 scf	1.0E-05	8.8E-02	4.4E-05	Yes	No		NA	Yes	1.50E-06	No
7440-39-3	Barium	4.40E-03 lb/10^6 scf	2.2E-04	1.9E+00	9.7E-04	No	Yes	0.033	Yes	No	-	NA
7440-41-7	Beryllium	1.20E-05 lb/10^6 scf	6.0E-07	5.3E-03	2.6E-06	Yes	No		NA	Yes	2.60E-05	Yes
7440-43-9	Cadmium	1.10E-03 lb/10^6 scf	5.5E-05	4.8E-01	2.4E-04	Yes	No		NA	Yes	3.70E-06	No
7440-47-3	Chromium	1.40E-03 lb/10^6 scf	7.1E-05	6.2E-01	3.1E-04	Yes	Yes	0.0033	Yes	No	-	NA
7440-48-4	Cobalt	8.40E-05 lb/10^6 scf	4.2E-06	3.7E-02	1.8E-05	Yes	Yes	0.0033	Yes	No	-	NA
7440-50-8	Copper	8.50E-04 lb/10^6 scf	4.3E-05	3.8E-01	1.9E-04	No	Yes	0.013	Yes	No	-	NA
7439-96-5	Manganese	3.80E-04 lb/10^6 scf	1.9E-05	1.7E-01	8.4E-05	Yes	Yes	0.067	Yes	No	-	NA
7439-97-6	Mercury[a]	2.60E-04 lb/10^6 scf	1.3E-05	1.1E-01	5.7E-06	Yes	No	-	NA	Yes[1]	25	Yes
7439-98-7	Molybdenum	1.10E-03 lb/10^6 scf	5.5E-05	4.8E-01	2.4E-04	No	Yes	0.333	Yes	No	-	NA
7440-02-0	Nickel	2.10E-03 lb/10^6 scf	1.1E-04	9.3E-01	4.6E-04	Yes	No	-	NA	Yes	2.7E-05	No
7782-49-2	Selenium	2.40E-05 lb/10^6 scf	1.2E-06	1.1E-02	5.3E-06	Yes	Yes	0.013	Yes	No	-	NA
7440-62-2	Vanadium	2.30E-03 lb/10^6 scf	1.2E-04	1.0E+00	5.1E-04	No	Yes	0.003	Yes	No	-	NA
7440-66-6	Zinc	2.90E-02 lb/10^6 scf	1.5E-03	1.3E+01	6.4E-03	No	Yes	0.667	Yes			

Notes

[a] Hg standard in lbs/year for compliance with IDAPA 58.01.01.215 standard of 25 lbs/year.

[b] POM per AP-42.

[c] PAH/POM for comparison to emission threshold in IDAPA 58.01.01.586.

APPENDIX C: FLUID BED DRYER MANUFACTURER DATA

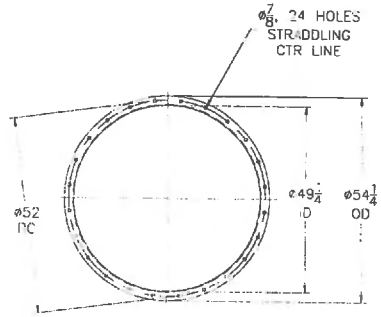

INLET FLANGE

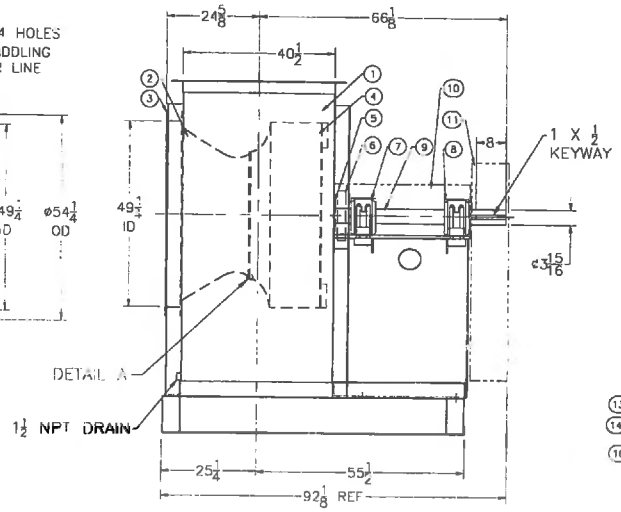

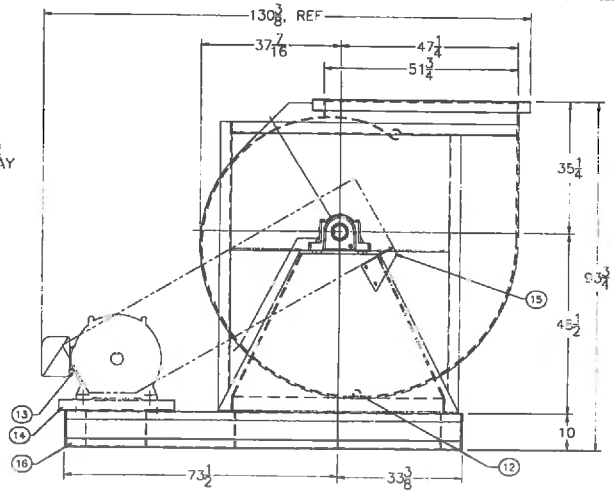

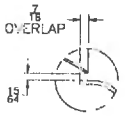

DETAIL A (NTS)

MIN. CLEARANCE FROM CONE TO CONE MEASURED AT BOTTOM CENTER LOCATION

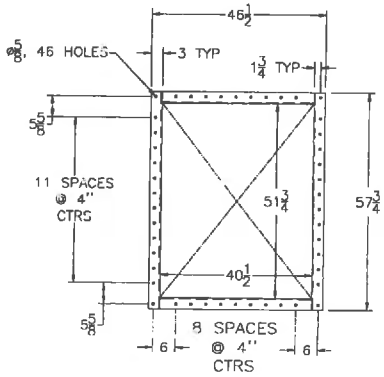

OUTLET FLANGE

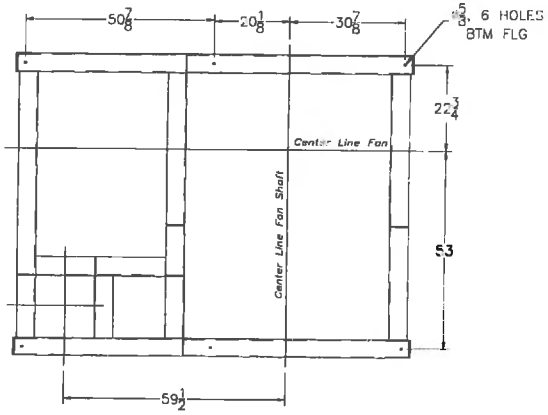

FOUNDATION PLAN

ACCESSORIES

- ACCESS DOOR, FLUSH, POSITION TBA (C/W BLACK NITRILE FOAM GASKET)
- BELT GUARD, SUPPLIED BY NB, MOUNTED BY NB
- COOLING WHEEL WITH GUARD- EXTENDED GREASE LINES, NYLON
- HOUSING DRAIN WITH PLUG, 1.5" DIA., ON INLET SIDE SHEET AT LOWEST POINT OF SCROLL
- MOTOR BASE, SLIDE- NAMEPLATE, STANDARD
- PUNCHED FLANGED INLET
- PUNCHED FLANGED OUTLET
- SHAFT AND BEARING GUARD (SUPPLIED AND MOUNTED BY NB)
- SHAFT SEAL – TYPE: GASKETED
- SPECIAL WELDING INSTRUCTIONS – ALL WELDS CONTINUOUS
- SPLIT HOUSING – TYPE: WEE
- UNITARY BASE
- PAINT SPECIFICATION
  SURFACE PREP: SSPC–SP1 & SP2 CLEANED SURFACES
  PRIMER: 1 COAT INTERGARD 251 EPOXY PRIMER
  FINISH: 1 COAT INTERGARD 345 HB EPOXY
  TOTAL DFT 6.5 MILS FINISH

NOTES

1)

ITEM	QTY	NAME	DESIGN / PART
16	1	UNITARY BASE	60689.02.2
15	1	BELT GUARD BRACKET	
14	1	SLIDE BASE	4441
13	1	MOTOR	4441
12	1	DRAIN	1.5NPT
11	1	BELT GUARD	60689.02.9
10	1	SHAFT & BEARING GUARD	60689.02.8
9	1	SHAFT	60689.02.7
8	1	DRIVE BEARING(FIX)	SAFD22522C3 X 3.9375
7	1	INBOARD BEARING(FLOAT)	SAFD2522C3X3.9375
6	1	COOLING WHEEL	4-2-1510- 3
5	1	SHAFT SEAL	39587
4	1	WHEEL	60689.02.5
3	1	INLET FLANGE	
2	1	INLET CONE	
1	1	HOUSING	60689.02.3

PARTS LIST

FAN DESCRIPTION

QUANTITY	DESIGN	SIZE	WIDTH	ARRANGEMENT	ROTATION	DISCHARGE	CLASS	MAX SPEED (RPM)	MAX ALLOW TEMP (F)	FAN WEIGHT (LBS)
2	5020	4900	110%	1	CCW	UB	4HD	1443	300	6500

FAN PERFORMANCE

CONDITION	FLOW (ACFM)	SP (IN.WG)	SPEED (RPM)	POWER (BHP)	TEMP (F)	ELEV (FT)	DENSITY (LB/CU.FT)	OUTLET VEL (FT/MIN)
OPERATING	51000	10	1221	100.8	130	4705	0.0567	3651

MOTOR INFORMATION

SUPPLIED BY: NB & MOUNTED BY: NB

HP	RPM	CURRENT	FRAME	TYPE	POSITION
[illegible]	[illegible]	[illegible]	[illegible]	[illegible]	[illegible]

DRIVE INFORMATION

SUPPLIED BY: NB & MOUNTED BY: NB

TYPE	MTR SHEAVE	MTR BUSHING	FAN SHEAVE	FAN BUSHING	QTY / BELT	C.D.
[illegible]	[illegible]	[illegible]	[illegible]	[illegible]	5V x1800	68.8

NO.	DESCRIPTION	DATE	BY
	REVISION		

CUSTOMER: Reyco Systems, Inc.

PROJECT: X00[illegible]

TAG NO.

NORTHERN BLOWER
901 Regent Ave. West, Winnipeg, Manitoba, Canada, R2C 2Z8
Telephone: (204) 222-4216, Telefax: (204) 222-7801

CERTIFIED FOR CONSTRUCTION PENDING CUSTOMER APPROVAL

TOLERANCE: +1/8

SCALE: TO SCALE

DRAWN BY: JC	DATE: 2012-05-28	REV. 0
CHECKED BY: BD	DATE: 2012-05-28	DRAWING NO.
APPROVED BY: HK	DATE: 2012-05-28	60689.02

C:\Users\Jeff\AppData\Local\Microsoft\Windows\Temporary Internet Files\Content.Outlook\SAUXL3XX\60689 02 (2).dwg, 8/15/2012 5:44:08 PM, Adobe PDF

From: Jeff Denkers [mailto:jeff@idahosteel.com]
Sent: Wednesday, August 15, 2012 5:46 PM
To: Leo Herbert
Cc: Todd Scott; 'Geri Hernandez'
Subject: Idahoan Dryer Discharge

Leo,

The following is the information per our discussion this afternoon.

Idaho Steel Products 54" x 260" Custom Built Agglomeration Dryer

Stack Information.

50" x 40" Rectangular discharge
Finished Floor to top of stack 447"
Discharge is 51,000 ft^3/min

The fan cut sheet is attached.

Please let us know if you have any questions.

Regards,

Jeff Denkers
Engineering Manager

IDAHOSTEEL
Food Processing Equipment

Ph: (208)522-1275
Fx: (208)522-6041
Cell (208)419-5181
Email: jeff@idahosteel.com

APPENDIX D: FACILITY LAYOUT DRAWING

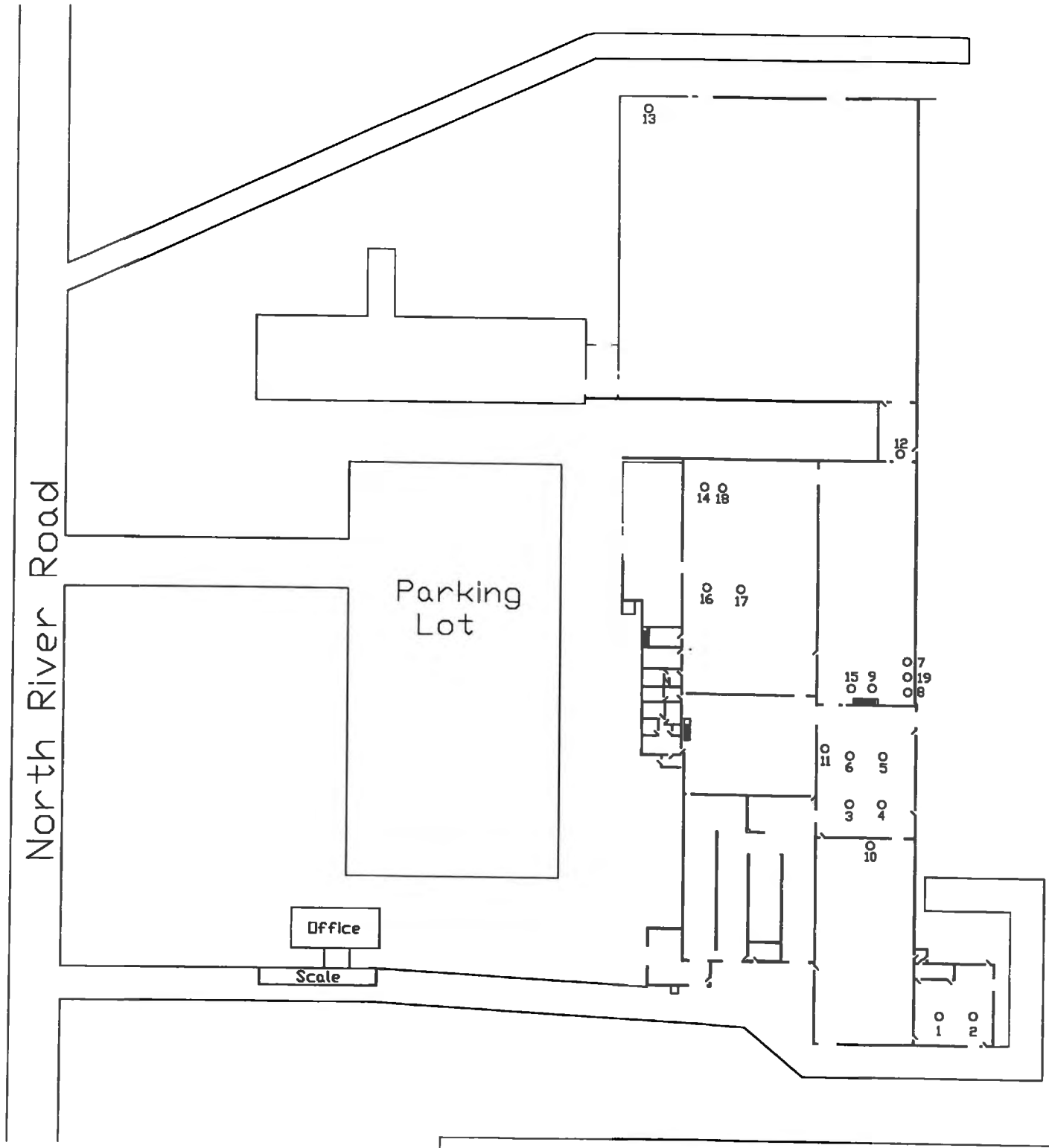

Scale (in feet)

0 50 100

Air Pollution Points
Idaho Falls Facility

DRAWN BY: Todd S.	DATE 9/20/12	idahoan NUMBER ONE POTATO PLACE LEWISVILLE, ID 83431-0130
Saved As: Idaho Falls Air Permit May.dwg		
SCALE None		SHEET 1 OF 1

APPENDIX E: ELECTRONIC MODELING FILES

Tessa Stevens

From: Shawnee Chen
Sent: Thursday, September 27, 2012 3:55 PM
To: Shawnee Chen
Cc: Cheryl Robinson
Subject: FW: Engineering changes - phone conversation (9-27-2012)
Attachments: 9-27-12 update.pdf

Follow Up Flag: Follow up
Flag Status: Flagged

Called Leo. He describe the process changes:

From source ID No. 14 to No. 19, No. 22, and No. 26, now they are self-contained. Air flows from the baghouses are sent back to the units.

He missed cyclone, bag room packaging. That is the existing system.

New Unit Number vs.	Old Unit Number
14	20
15	22
16	23
17	24
18	25
19	27

From: Leo Herbert [mailto:lherbert@idahoan.com]
Sent: Thursday, September 27, 2012 3:20 PM
To: Shawnee Chen; Cheryl Robinson
Subject: Engineering changes

Shawnee, we have re engineered the IF Facility.

Attached are the updated Regulated sources

I have passed this on to Bison Engineering to update the air model.

Leo Herbert
Corporate Environmental Manager
IDAHOAN FOODS
Idahoan Foods, LLC
208-754-8194
lherbert@Idahoan.com

Regulated Sources

Unit #	Title			
1	Boiler	# 1		Gas
2	Boiler	# 2		Gas
3	Dryer	Flaker/Drum Type	#1	
4	Dryer	Flaker/Drum Type	#2	
5	Dryer	Flaker/Drum Type	#3	
6	Dryer	Flaker/Drum Type	#4	
7	Vaculift	Flaker line 1&2		
8	Vaculift	Flaker line 3		
9	Vaculift	Flaker line 4 Vaculift & Bag House		
10	Air Makeup Unit	Waste Plant #1		Gas
11	Air Makeup Unit	Flaker Room #2		Gas
12	Air Makeup Unit	Bag Room #3		Gas
13	Air Makeup Unit	Warehouse #4		Gas
14	Bag house	Product Transfer Raw	Creamy Mash	
15	Bag house	Exhaust	Dust Collector System	
16	Cyclone	Burner/Exhaust, Fluid Bed Dryer	Real Line 1	Gas
17	Cyclone	Burner/Exhaust, Fluid Bed Dryer	Real Line 2	Gas
18	Cyclone	Exhaust	Creamy Mash	
19	Cyclone	Bag Room	Packaging	

DEQ AIR QUALITY PROGRAM
1410 N. Hilton, Boise, ID 83706
For assistance, call the
Air Permit Hotline – 1-877-5PERMIT

Emissions Unit - General **Form EU0**
Revision 4
08/28/08

Please see instructions on page 2 before filling out the form.

IDENTIFICATION

1. Company Name:	2. Facility Name:	3. Facility ID No:
Idahoan Foods, LLC	Idaho Falls Facility	019-00038

4. Brief Project Description: Replacing Three Proctors with 2 Fluid Bed Dryers and Adding a Drum Dryer

EMISSIONS UNIT (PROCESS) IDENTIFICATION & DESCRIPTION

5.	Emissions Unit (EU) Name:	BOILER # 1
6.	EU ID Number:	1
7.	EU Type:	☐ New Source ☐ Unpermitted Existing Source ☒ Modification to a Permitted Source -- Previous Permit #:T2-2009.0027 Date Issued: 5/9/2008
8.	Manufacturer:	CLEVER BROOKS
9.	Model:	WT200X-CN5
10..	Maximum Capacity:	61.6 MILLION BTU/HR
11.	Date of Construction:	1974
12.	Date of Modification (if any):	1981
13.	Is this a Controlled Emission Unit?	☒ No ☐ Yes If Yes, complete the following section. If No, go to line 22.

EMISSIONS CONTROL EQUIPMENT

14. Control Equipment Name and ID:

15. Date of Installation: 16. Date of Modification (if any):

17. Manufacturer and Model Number:

18. ID(s) of Emission Unit Controlled:

19. Is operating schedule different than emission units(s) involved? ☐ Yes ☐ No

20. Does the manufacturer guarantee the control efficiency of the control equipment? ☐ Yes ☐ No (If Yes, attach and label manufacturer guarantee)

	Pollutant Controlled					
	PM	PM10	SO_2	NOx	VOC	CO
Control Efficiency						

21. If manufacturer's data is not available, attach a separate sheet of paper to provide the control equipment design specifications and performance data to support the above mentioned control efficiency.

EMISSION UNIT OPERATING SCHEDULE (hours/day, hours/year, or other)

22.	Actual Operation:	8424
23.	Maximum Operation:	8760

REQUESTED LIMITS

24. Are you requesting any permit limits? ☐ Yes ☒ No (If Yes, indicate all that apply below)

- ☐ Operation Hour Limit(s):
- ☐ Production Limit(s):
- ☐ Material Usage Limit(s):
- ☐ Limits Based on Stack Testing: Please attach all relevant stack testing summary reports
- ☐ Other:

25. Rationale for Requesting the Limit(s):

Idahoan Foods, LLC Idaho Falls Facility P-2012.0020 PROJ 61031

Source ID No.	Sources	Control Equipment	Emission Point ID No.
1	Emissions Unit Name: Manufacturer: CLEVER BROOKS Model: WT200X-CN5 Burner Model: Axially Fired Manufacture Date: 1974 Heat input rating: 61.6 MMBtu/hr Max. production: NA T/hr Fuel: Natural Gas Fuel consumption: 59,553 scf/hr		Exit height: 26 ft Exit diameter: 3.42 ft Exit flow rate: 15,295 acfm Exit temperature: 390 °F

DEQ AIR QUALITY PROGRAM
1410 N. Hilton, Boise, ID 83706
For assistance, call the
Air Permit Hotline – 1-877-5PERMIT

Emissions Unit - General **Form EU0**
Revision 4
08/28/08

Please see instructions on page 2 before filling out the form.

IDENTIFICATION

1. Company Name:	2. Facility Name:	3. Facility ID No:
Idahoan Foods, LLC	Idaho Falls Facility	019-00038

4. Brief Project Description: Replacing Three Proctors with 2 Fluid Bed Dryers and Adding a Drum Dryer

EMISSIONS UNIT (PROCESS) IDENTIFICATION & DESCRIPTION

5.	Emissions Unit (EU) Name:	BOILER # 2
6.	EU ID Number:	2
7.	EU Type:	☐ New Source ☐ Unpermitted Existing Source ☒ Modification to a Permitted Source -- Previous Permit #:T2-2009.0027 Date Issued: 5/9/2008
8.	Manufacturer:	CLEVER BROOKS
9.	Model:	L34
10..	Maximum Capacity:	26.7 MILLION BTU/HR
11.	Date of Construction:	1968
12.	Date of Modification (if any):	1980
13.	Is this a Controlled Emission Unit?	☒ No ☐ Yes If Yes, complete the following section. If No, go to line 22.

EMISSIONS CONTROL EQUIPMENT

14. Control Equipment Name and ID:

15. Date of Installation: 16. Date of Modification (if any):

17. Manufacturer and Model Number:

18. ID(s) of Emission Unit Controlled:

19. Is operating schedule different than emission units(s) involved? ☐ Yes ☐ No

20. Does the manufacturer guarantee the control efficiency of the control equipment? ☐ Yes ☐ No (If Yes, attach and label manufacturer guarantee)

	Pollutant Controlled					
	PM	PM10	SO_2	NOx	VOC	CO
Control Efficiency						

21. If manufacturer's data is not available, attach a separate sheet of paper to provide the control equipment design specifications and performance data to support the above mentioned control efficiency.

EMISSION UNIT OPERATING SCHEDULE (hours/day, hours/year, or other)

22.	Actual Operation:	8424
23.	Maximum Operation:	8760

REQUESTED LIMITS

24. Are you requesting any permit limits? ☐ Yes ☒ No (If Yes, indicate all that apply below)

- ☐ Operation Hour Limit(s):
- ☐ Production Limit(s):
- ☐ Material Usage Limit(s):
- ☐ Limits Based on Stack Testing: Please attach all relevant stack testing summary reports
- ☐ Other:

25. Rationale for Requesting the Limit(s):

Idahoan Foods, LLC Idaho Falls Facility P-2012.0020 PROJ 61031

Source ID No.	Sources	Control Equipment	Emission Point ID No.
2	Emissions Unit Name: Manufacturer: CLEVER BROOKS Model: L34 Burner Model: Axially Fired Manufacture Date: 1968 Heat input rating: 26.7 MMBtu/hr Max. production: NA T/hr Fuel: Natural Gas Fuel consumption: 25,783 scf/hr		Exit height: 26 ft Exit diameter: 3.42 ft Exit flow rate: 9,193 acfm Exit temperature: 360 °F

DEQ AIR QUALITY PROGRAM
1410 N. Hilton, Boise, ID 83706
For assistance, call the
Air Permit Hotline – 1-877-5PERMIT

Emissions Unit - General **Form EU0**
Revision 4
08/28/08

Please see instructions on page 2 before filling out the form.

IDENTIFICATION

1. Company Name:	2. Facility Name:	3. Facility ID No:
Idahoan Foods, LLC	Idaho Falls Facility	019-00038

4. Brief Project Description: Replacing Three Proctors with 2 Fluid Bed Dryers and Adding a Drum Dryer

EMISSIONS UNIT (PROCESS) IDENTIFICATION & DESCRIPTION

5.	Emissions Unit (EU) Name:	DRYER, FLAKER/DRUM TYPE # 1
6.	EU ID Number:	3
7.	EU Type:	☐ New Source ☐ Unpermitted Existing Source ☒ Modification to a Permitted Source -- Previous Permit #:T2-2009.0027 Date Issued: 5/9/2008
8.	Manufacturer:	BLAW KNOX
9.	Model:	
10..	Maximum Capacity:	0.43 TONS /HR FLAKE PRODUCTION
11.	Date of Construction:	1974
12.	Date of Modification (if any):	N/A
13.	Is this a Controlled Emission Unit?	☒ No ☐ Yes If Yes, complete the following section. If No, go to line 22.

EMISSIONS CONTROL EQUIPMENT

14. Control Equipment Name and ID:

15. Date of Installation: 16. Date of Modification (if any):

17. Manufacturer and Model Number:

18. ID(s) of Emission Unit Controlled:

19. Is operating schedule different than emission units(s) involved? ☐ Yes ☐ No

20. Does the manufacturer guarantee the control efficiency of the control equipment? ☐ Yes ☐ No (If Yes, attach and label manufacturer guarantee)

	Pollutant Controlled					
	PM	PM10	SO_2	NOx	VOC	CO
Control Efficiency						

21. If manufacturer's data is not available, attach a separate sheet of paper to provide the control equipment design specifications and performance data to support the above mentioned control efficiency.

EMISSION UNIT OPERATING SCHEDULE (hours/day, hours/year, or other)

22.	Actual Operation:	8424
23.	Maximum Operation:	8760

REQUESTED LIMITS

24. Are you requesting any permit limits? ☐ Yes ☒ No (If Yes, indicate all that apply below)

☐ Operation Hour Limit(s):

☐ Production Limit(s):

☐ Material Usage Limit(s):

☐ Limits Based on Stack Testing: Please attach all relevant stack testing summary reports

☐ Other:

25. Rationale for Requesting the Limit(s):

Idahoan Foods, LLC Idaho Falls Facility P-2012.0020 PROJ 61031

Source ID No.	Sources	Control Equipment	Emission Point ID No.
3	Emissions Unit Name: Dryer Flaker/Drum Type #1 Manufacturer: Blaw Knox Model: 105 Burner Model: NA Manufacture Date: 1974 Heat input rating: NA MMBtu/hr Max. production: 2.5 T/hr, for all 4 Flakers combined. Fuel: NA Fuel consumption: NA gal/hr	Control Device Name: NA	Exit height: 37 ft Exit diameter: 4 ft Exit flow rate: 10,000 acfm Exit temperature: 110 °F

DEQ AIR QUALITY PROGRAM
1410 N. Hilton, Boise, ID 83706
For assistance, call the
Air Permit Hotline – 1-877-5PERMIT

Emissions Unit - General **Form EU0**
Revision 4
08/28/08

Please see instructions on page 2 before filling out the form.

IDENTIFICATION

1. Company Name:	2. Facility Name:	3. Facility ID No:
Idahoan Foods, LLC	Idaho Falls Facility	019-00038

4. Brief Project Description: Replacing Three Proctors with 2 Fluid Bed Dryers and Adding a Drum Dryer

EMISSIONS UNIT (PROCESS) IDENTIFICATION & DESCRIPTION

5.	Emissions Unit (EU) Name:	DRYER, FLAKER/DRUM TYPE # 2
6.	EU ID Number:	4
7.	EU Type:	☐ New Source ☐ Unpermitted Existing Source ☒ Modification to a Permitted Source -- Previous Permit #:T2-2009.0027 Date Issued: 5/9/2008
8.	Manufacturer:	BLAW KNOX
9.	Model:	
10..	Maximum Capacity:	0.43 TONS /HR FLAKE PRODUCTION
11.	Date of Construction:	1974
12.	Date of Modification (if any):	N/A
13.	Is this a Controlled Emission Unit?	☒ No ☐ Yes If Yes, complete the following section. If No, go to line 22.

EMISSIONS CONTROL EQUIPMENT

14. Control Equipment Name and ID:

15. Date of Installation: 16. Date of Modification (if any):

17. Manufacturer and Model Number:

18. ID(s) of Emission Unit Controlled:

19. Is operating schedule different than emission units(s) involved? ☐ Yes ☐ No

20. Does the manufacturer guarantee the control efficiency of the control equipment? ☐ Yes ☐ No (If Yes, attach and label manufacturer guarantee)

	Pollutant Controlled					
	PM	PM10	SO_2	NOx	VOC	CO
Control Efficiency						

21. If manufacturer's data is not available, attach a separate sheet of paper to provide the control equipment design specifications and performance data to support the above mentioned control efficiency.

EMISSION UNIT OPERATING SCHEDULE (hours/day, hours/year, or other)

22.	Actual Operation:	8424
23.	Maximum Operation:	8760

REQUESTED LIMITS

24. Are you requesting any permit limits? ☐ Yes ☒ No (If Yes, indicate all that apply below)

- ☐ Operation Hour Limit(s):
- ☐ Production Limit(s):
- ☐ Material Usage Limit(s):
- ☐ Limits Based on Stack Testing: Please attach all relevant stack testing summary reports
- ☐ Other:

25. Rationale for Requesting the Limit(s):

Idahoan Foods, LLC Idaho Falls Facility P-2012.0020 PROJ 61031

Source ID No.	Sources	Control Equipment	Emission Point ID No.
4	Emissions Unit Name: Dryer Flaker/Drum Type #2 Manufacturer: Blaw Knox Model: 105 Burner Model: NA Manufacture Date: 1974 Heat input rating: NA MMBtu/hr Max. production: 2.5 T/hr for all 4 flakers combined. Fuel: NA Fuel consumption: NA gal/hr	Control Device Name: NA	Exit height: 40 ft Exit diameter: 4 ft Exit flow rate: 10,000 acfm Exit temperature: 110 °F

DEQ AIR QUALITY PROGRAM
1410 N. Hilton, Boise, ID 83706
For assistance, call the
Air Permit Hotline – 1-877-5PERMIT

Emissions Unit - General **Form EU0**
Revision 4
08/28/08

Please see instructions on page 2 before filling out the form.

IDENTIFICATION

1. Company Name:	2. Facility Name:	3. Facility ID No:
Idahoan Foods, LLC	Idaho Falls Facility	019-00038

4. Brief Project Description: Replacing Three Proctors with 2 Fluid Bed Dryers and Adding a Drum Dryer

EMISSIONS UNIT (PROCESS) IDENTIFICATION & DESCRIPTION

5.	Emissions Unit (EU) Name:	DRYER, FLAKER/DRUM TYPE # 3
6.	EU ID Number:	5
7.	EU Type:	☐ New Source ☐ Unpermitted Existing Source ☒ Modification to a Permitted Source -- Previous Permit #:T2-2009.0027 Date Issued: 5/9/2008
8.	Manufacturer:	IDAHO STEEL
9.	Model:	
10..	Maximum Capacity:	0.82 TONS /HR FLAKE PRODUCTION
11.	Date of Construction:	2004
12.	Date of Modification (if any):	2011
13.	Is this a Controlled Emission Unit?	☒ No ☐ Yes If Yes, complete the following section. If No, go to line 22.

EMISSIONS CONTROL EQUIPMENT

14. Control Equipment Name and ID:

15. Date of Installation: 16. Date of Modification (if any):

17. Manufacturer and Model Number:

18. ID(s) of Emission Unit Controlled:

19. Is operating schedule different than emission units(s) involved? ☐ Yes ☐ No

20. Does the manufacturer guarantee the control efficiency of the control equipment? ☐ Yes ☐ No (If Yes, attach and label manufacturer guarantee)

	Pollutant Controlled					
	PM	PM10	SO_2	NOx	VOC	CO
Control Efficiency						

21. If manufacturer's data is not available, attach a separate sheet of paper to provide the control equipment design specifications and performance data to support the above mentioned control efficiency.

EMISSION UNIT OPERATING SCHEDULE (hours/day, hours/year, or other)

22.	Actual Operation:	8424
23.	Maximum Operation:	8760

REQUESTED LIMITS

24. Are you requesting any permit limits? ☐ Yes ☒ No (If Yes, indicate all that apply below)

- ☐ Operation Hour Limit(s):
- ☐ Production Limit(s):
- ☐ Material Usage Limit(s):
- ☐ Limits Based on Stack Testing: Please attach all relevant stack testing summary reports
- ☐ Other:

25. Rationale for Requesting the Limit(s):

Idahoan Foods, LLC Idaho Falls Facility P-2012.0020 PROJ 61031

Source ID No.	Sources	Control Equipment	Emission Point ID No.
5	Emissions Unit Name: Dryer Flaker/Drum Type #3 Manufacturer: Idaho Steel Model: 6X20-5 Roll Drum Burner Model: NA Manufacture Date: 2004 Heat input rating: NA MMBtu/hr Max. production: 2.5 T/hr for all 4 flakers combined. Fuel: NA Fuel consumption: NA gal/hr	Control Device Name: NA	Exit height: 41 ft Exit diameter: 4 ft Exit flow rate: 20,000 acfm Exit temperature: 110 °F

DEQ AIR QUALITY PROGRAM
1410 N. Hilton, Boise, ID 83706
For assistance, call the
Air Permit Hotline – 1-877-5PERMIT

Emissions Unit - General **Form EU0**
Revision 4
08/28/08

Please see instructions on page 2 before filling out the form.

IDENTIFICATION

1. Company Name:	2. Facility Name:	3. Facility ID No:
Idahoan Foods, LLC	Idaho Falls Facility	019-00038

4. Brief Project Description: Replacing Three Proctors with 2 Fluid Bed Dryers and Adding a Drum Dryer

EMISSIONS UNIT (PROCESS) IDENTIFICATION & DESCRIPTION

5.	Emissions Unit (EU) Name:	DRYER, FLAKER/DRUM TYPE # 4
6.	EU ID Number:	6
7.	EU Type:	☐ New Source ☐ Unpermitted Existing Source ☒ Modification to a Permitted Source -- Previous Permit #:T2-2009.0027 Date Issued: 5/9/2008
8.	Manufacturer:	IDAHO STEEL
9.	Model:	
10..	Maximum Capacity:	0.82 TONS /HR FLAKE PRODUCTION
11.	Date of Construction:	1985
12.	Date of Modification (if any):	2012
13.	Is this a Controlled Emission Unit?	☒ No ☐ Yes If Yes, complete the following section. If No, go to line 22.

EMISSIONS CONTROL EQUIPMENT

14. Control Equipment Name and ID:

15. Date of Installation: 16. Date of Modification (if any):

17. Manufacturer and Model Number:

18. ID(s) of Emission Unit Controlled:

19. Is operating schedule different than emission units(s) involved? ☐ Yes ☐ No

20. Does the manufacturer guarantee the control efficiency of the control equipment? ☐ Yes ☐ No (If Yes, attach and label manufacturer guarantee)

	Pollutant Controlled					
	PM	PM10	SO_2	NOx	VOC	CO
Control Efficiency						

21. If manufacturer's data is not available, attach a separate sheet of paper to provide the control equipment design specifications and performance data to support the above mentioned control efficiency.

EMISSION UNIT OPERATING SCHEDULE (hours/day, hours/year, or other)

22.	Actual Operation:	8424
23.	Maximum Operation:	8760

REQUESTED LIMITS

24. Are you requesting any permit limits? ☐ Yes ☒ No (If Yes, indicate all that apply below)

- ☐ Operation Hour Limit(s):
- ☐ Production Limit(s):
- ☐ Material Usage Limit(s):
- ☐ Limits Based on Stack Testing: Please attach all relevant stack testing summary reports
- ☐ Other:

25. Rationale for Requesting the Limit(s):

Idahoan Foods, LLC Idaho Falls Facility P-2012.0020 PROJ 61031

Source ID No.	Sources	Control Equipment	Emission Point ID No.
6	Emissions Unit Name: Dryer Flaker Drum Type #4 Manufacturer: Idaho Steel Model: 6X20 5 Roll Drum Burner Model: NA Manufacture Date: 1985 Heat input rating: NA MMBtu/hr Max. production: 2.5 T/hr for all 4 Flakers combined. Fuel: NA Fuel consumption: NA gal/hr	Control Device Name: NA	Exit height: 42 ft Exit diameter: 4 ft Exit flow rate: 20,000 acfm Exit temperature: 110 °F

DEQ AIR QUALITY PROGRAM
1410 N. Hilton, Boise, ID 83706
For assistance, call the
Air Permit Hotline – 1-877-5PERMIT

Emissions Unit - General **Form EU0**
Revision 4
08/28/08

Please see instructions on page 2 before filling out the form.

IDENTIFICATION

1. Company Name:	2. Facility Name:	3. Facility ID No:
Idahoan Foods, LLC	Idaho Falls Facility	019-00038

4. Brief Project Description: Replacing Three Proctors with 2 Fluid Bed Dryers and Adding a Drum Dryer

EMISSIONS UNIT (PROCESS) IDENTIFICATION & DESCRIPTION

5.	Emissions Unit (EU) Name:	FLAKER LINE 1&2 VACULIFT
6.	EU ID Number:	7
7.	EU Type:	☐ New Source ☐ Unpermitted Existing Source ☒ Modification to a Permitted Source -- Previous Permit #:T2-2009.0027 Date Issued: 5/9/2008
8.	Manufacturer:	VACULIFT
9.	Model:	N/A
10..	Maximum Capacity:	2.43 TONS /HR FLAKE PRODUCTION
11.	Date of Construction:	1981
12.	Date of Modification (if any):	
13.	Is this a Controlled Emission Unit?	☐ No ☒ Yes If Yes, complete the following section. If No, go to line 22.

EMISSIONS CONTROL EQUIPMENT

14. Control Equipment Name and ID:

15. Date of Installation: 1981 16. Date of Modification (if any):

17. Manufacturer and Model Number: VACULIFT

18. ID(s) of Emission Unit Controlled:

19. Is operating schedule different than emission units(s) involved? ☐ Yes ☒ No

20. Does the manufacturer guarantee the control efficiency of the control equipment? ☐ Yes ☒ No (If Yes, attach and label manufacturer guarantee)

	Pollutant Controlled					
	PM	PM10	SO_2	NOx	VOC	CO
Control Efficiency	95%	95%				

21. If manufacturer's data is not available, attach a separate sheet of paper to provide the control equipment design specifications and performance data to support the above mentioned control efficiency.

EMISSION UNIT OPERATING SCHEDULE (hours/day, hours/year, or other)

22.	Actual Operation:	8424
23.	Maximum Operation:	8760

REQUESTED LIMITS

24. Are you requesting any permit limits? ☐ Yes ☒ No (If Yes, indicate all that apply below)

- ☐ Operation Hour Limit(s):
- ☐ Production Limit(s):
- ☐ Material Usage Limit(s):
- ☐ Limits Based on Stack Testing: Please attach all relevant stack testing summary reports
- ☐ Other:

25. Rationale for Requesting the Limit(s):

Idahoan Foods, LLC Idaho Falls Facility P-2012.0020 PROJ 61031

Source ID No.	Sources	Control Equipment	Emission Point ID No.
7	Emissions Unit Name: Flaker lines 1 & 2 Vaculift Manufacturer: Vaculift Model: Burner Model: NA Manufacture Date: 1981 Heat input rating: NA MMBtu/hr Max. production: .86 T/hr Fuel: NA Fuel consumption: NA gal/hr	Control Device Name: Manufacturer: Vaculift Model: None Type: Cyclone Number of bags: NA Air to Cloth ratio: NA PM_{10} control efficiency: 95%	Exit height: 39 ft Exit diameter: .8 ft Exit flow rate: 1140 acfm Exit temperature: 110 °F

DEQ AIR QUALITY PROGRAM
1410 N. Hilton, Boise, ID 83706
For assistance, call the
Air Permit Hotline – 1-877-5PERMIT

Emissions Unit - General **Form EU0**
Revision 4
08/28/08

Please see instructions on page 2 before filling out the form.

IDENTIFICATION

1. Company Name:	2. Facility Name:	3. Facility ID No:
Idahoan Foods, LLC	Idaho Falls Facility	019-00038

4. Brief Project Description: Replacing Three Proctors with 2 Fluid Bed Dryers and Adding a Drum Dryer

EMISSIONS UNIT (PROCESS) IDENTIFICATION & DESCRIPTION

5.	Emissions Unit (EU) Name:	FLAKER LINE 3 VACULIFT
6.	EU ID Number:	8
7.	EU Type:	☐ New Source ☐ Unpermitted Existing Source ☒ Modification to a Permitted Source -- Previous Permit #:T2-2009.0027 Date Issued: 5/9/2008
8.	Manufacturer:	VACULIFT
9.	Model:	N/A
10..	Maximum Capacity:	0.82 TONS /HR FLAKE PRODUCTION
11.	Date of Construction:	1995
12.	Date of Modification (if any):	2004
13.	Is this a Controlled Emission Unit?	☒ No ☐ Yes If Yes, complete the following section. If No, go to line 22.

EMISSIONS CONTROL EQUIPMENT

14. Control Equipment Name and ID:

15. Date of Installation: 1995 16. Date of Modification (if any):

17. Manufacturer and Model Number: VACULIFT

18. ID(s) of Emission Unit Controlled:

19. Is operating schedule different than emission units(s) involved? ☐ Yes ☐ No

20. Does the manufacturer guarantee the control efficiency of the control equipment? ☐ Yes ☐ No (If Yes, attach and label manufacturer guarantee)

	Pollutant Controlled					
	PM	PM10	SO_2	NOx	VOC	CO
Control Efficiency	95%	95%				

21. If manufacturer's data is not available, attach a separate sheet of paper to provide the control equipment design specifications and performance data to support the above mentioned control efficiency.

EMISSION UNIT OPERATING SCHEDULE (hours/day, hours/year, or other)

22.	Actual Operation:	8424
23.	Maximum Operation:	8760

REQUESTED LIMITS

24. Are you requesting any permit limits? ☐ Yes ☒ No (If Yes, indicate all that apply below)

- ☐ Operation Hour Limit(s):
- ☐ Production Limit(s):
- ☐ Material Usage Limit(s):
- ☐ Limits Based on Stack Testing: Please attach all relevant stack testing summary reports
- ☐ Other:

25. Rationale for Requesting the Limit(s):

Idahoan Foods, LLC Idaho Falls Facility P-2012.0020 PROJ 61031

Source ID No.	Sources	Control Equipment	Emission Point ID No.
8	Emissions Unit Name: Flaker line 3 Vaculift Manufacturer: Vaculift Model: NA Burner Model: NA Manufacture Date: 1995 Heat input rating: NA MMBtu/hr Max. production: .82 T/hr Fuel: NA Fuel consumption: NA gal/hr	Control Device Name: Manufacturer: Vaculift Model: None Type: Cyclone Number of bags: NA Air to Cloth ratio: NA to 1 PM_{10} control efficiency: 95%	Exit height: 39 ft Exit diameter: .8 ft Exit flow rate: 990 acfm Exit temperature: 110 °F

DEQ AIR QUALITY PROGRAM
1410 N. Hilton, Boise, ID 83706
For assistance, call the
Air Permit Hotline – 1-877-5PERMIT

Emissions Unit - General **Form EU0**
Revision 4
08/28/08

Please see instructions on page 2 before filling out the form.

IDENTIFICATION

1. Company Name:	2. Facility Name:	3. Facility ID No:
Idahoan Foods, LLC	Idaho Falls Facility	019-00038

4. Brief Project Description: Replacing Three Proctors with 2 Fluid Bed Dryers and Adding a Drum Dryer

EMISSIONS UNIT (PROCESS) IDENTIFICATION & DESCRIPTION

5.	Emissions Unit (EU) Name:	FLAKER LINE 4 VACULIFT&BAGHOUSE
6.	EU ID Number:	9
7.	EU Type:	☐ New Source ☐ Unpermitted Existing Source ☒ Modification to a Permitted Source -- Previous Permit #:T2-2009.0027 Date Issued: 5/9/2008
8.	Manufacturer:	VACULIFT/SMME
9.	Model:	N/A
10..	Maximum Capacity:	0.82 TONS /HR FLAKE PRODUCTION
11.	Date of Construction:	1995
12.	Date of Modification (if any):	2012
13.	Is this a Controlled Emission Unit?	☒ No ☐ Yes If Yes, complete the following section. If No, go to line 22.

EMISSIONS CONTROL EQUIPMENT

14. Control Equipment Name and ID:

15. Date of Installation: 2012 16. Date of Modification (if any):

17. Manufacturer and Model Number:

18. ID(s) of Emission Unit Controlled:

19. Is operating schedule different than emission units(s) involved? ☐ Yes ☐ No

20. Does the manufacturer guarantee the control efficiency of the control equipment? ☐ Yes ☐ No (If Yes, attach and label manufacturer guarantee)

	Pollutant Controlled					
	PM	PM10	SO_2	NOx	VOC	CO
Control Efficiency	99.97%	99.97%				

21. If manufacturer's data is not available, attach a separate sheet of paper to provide the control equipment design specifications and performance data to support the above mentioned control efficiency.

EMISSION UNIT OPERATING SCHEDULE (hours/day, hours/year, or other)

22.	Actual Operation:	8424
23.	Maximum Operation:	8760

REQUESTED LIMITS

24. Are you requesting any permit limits? ☐ Yes ☒ No (If Yes, indicate all that apply below)

- ☐ Operation Hour Limit(s):
- ☐ Production Limit(s):
- ☐ Material Usage Limit(s):
- ☐ Limits Based on Stack Testing: Please attach all relevant stack testing summary reports
- ☐ Other:

25. Rationale for Requesting the Limit(s):

Idahoan Foods, LLC Idaho Falls Facility P-2012.0020 PROJ 61031

Source ID No.	Sources	Control Equipment	Emission Point ID No.
9	Emissions Unit Name: Flaker line 4 Vaculift & Bag House Manufacturer: Unknown Model: NA Burner Model: NA Manufacture Date: 2012 Heat input rating: NA MMBtu/hr Max. production: .75 T/hr Fuel: NA Fuel consumption: NA gal/hr	Control Device Name: Vaculift & Bag House Manufacturer: Vaculift/SMME Model: Unknown Type: Cyclone/Bag House Number of bags: 25 Air to Cloth ratio: 10 to 1 PM_{10} control efficiency: 99.97%	Exit height: 42 ft Exit diameter: .7 ft Exit flow rate: 1050 acfm Exit temperature: 110 °F

DEQ AIR QUALITY PROGRAM
1410 N. Hilton, Boise, ID 83706
For assistance, call the
Air Permit Hotline – 1-877-5PERMIT

Emissions Unit - General **Form EU0**
Revision 4
08/28/08

Please see instructions on page 2 before filling out the form.

IDENTIFICATION

1. Company Name:	2. Facility Name:	3. Facility ID No:
Idahoan Foods, LLC	Idaho Falls Facility	019-00038

4. Brief Project Description: Replacing Three Proctors with 2 Fluid Bed Dryers and Adding a Drum Dryer

EMISSIONS UNIT (PROCESS) IDENTIFICATION & DESCRIPTION

5.	Emissions Unit (EU) Name:	AIR MAKEUP UNIT #1 WASTE PLANT
6.	EU ID Number:	10
7.	EU Type:	☐ New Source ☐ Unpermitted Existing Source ☒ Modification to a Permitted Source -- Previous Permit #:T2-2009.0027 Date Issued: 5/9/2008
8.	Manufacturer:	UNKNOWN
9.	Model:	N/A
10..	Maximum Capacity:	2.5 Million BTU/HR
11.	Date of Construction:	1971
12.	Date of Modification (if any):	
13.	Is this a Controlled Emission Unit?	☒ No ☐ Yes If Yes, complete the following section. If No, go to line 22.

EMISSIONS CONTROL EQUIPMENT

14. Control Equipment Name and ID:

15. Date of Installation: 16. Date of Modification (if any):

17. Manufacturer and Model Number:

18. ID(s) of Emission Unit Controlled:

19. Is operating schedule different than emission units(s) involved? ☐ Yes ☐ No

20. Does the manufacturer guarantee the control efficiency of the control equipment? ☐ Yes ☐ No (If Yes, attach and label manufacturer guarantee)

	Pollutant Controlled					
	PM	PM10	SO_2	NOx	VOC	CO
Control Efficiency						

21. If manufacturer's data is not available, attach a separate sheet of paper to provide the control equipment design specifications and performance data to support the above mentioned control efficiency.

EMISSION UNIT OPERATING SCHEDULE (hours/day, hours/year, or other)

22.	Actual Operation:	8424
23.	Maximum Operation:	8760

REQUESTED LIMITS

24. Are you requesting any permit limits? ☐ Yes ☒ No (If Yes, indicate all that apply below)

- ☐ Operation Hour Limit(s):
- ☐ Production Limit(s):
- ☐ Material Usage Limit(s):
- ☐ Limits Based on Stack Testing: Please attach all relevant stack testing summary reports
- ☐ Other:

25. Rationale for Requesting the Limit(s):

Idahoan Foods, LLC Idaho Falls Facility P-2012.0020 PROJ 61031

Source ID No.	Sources	Control Equipment	Emission Point ID No.
10	Emissions Unit Name: Air Makeup Unit #1 Waste Plant Manufacturer: Idahoan Model: NA Burner Model: Unknown Manufacture Date: 1971 Heat input rating: 2.5 MMBtu/hr Max. production: NA T/hr Fuel: Natural Gas Fuel consumption: 2,418 scf/hr		

DEQ AIR QUALITY PROGRAM
1410 N. Hilton, Boise, ID 83706
For assistance, call the
Air Permit Hotline – 1-877-5PERMIT

Emissions Unit - General **Form EU0**
Revision 4
08/28/08

Please see instructions on page 2 before filling out the form.

IDENTIFICATION

1. Company Name:	2. Facility Name:	3. Facility ID No:
Idahoan Foods, LLC	Idaho Falls Facility	019-00038

4. Brief Project Description: Replacing Three Proctors with 2 Fluid Bed Dryers and Adding a Drum Dryer

EMISSIONS UNIT (PROCESS) IDENTIFICATION & DESCRIPTION

5.	Emissions Unit (EU) Name:	AIR MAKEUP UNIT #2 FLAKER ROOM
6.	EU ID Number:	11
7.	EU Type:	☐ New Source ☐ Unpermitted Existing Source ☒ Modification to a Permitted Source -- Previous Permit #:T2-2009.0027 Date Issued: 5/9/2008
8.	Manufacturer:	UNKNOWN
9.	Model:	N/A
10..	Maximum Capacity:	2.5 Million BTU/HR
11.	Date of Construction:	1971
12.	Date of Modification (if any):	
13.	Is this a Controlled Emission Unit?	☒ No ☐ Yes If Yes, complete the following section. If No, go to line 22.

EMISSIONS CONTROL EQUIPMENT

14. Control Equipment Name and ID:

15. Date of Installation: 16. Date of Modification (if any):

17. Manufacturer and Model Number:

18. ID(s) of Emission Unit Controlled:

19. Is operating schedule different than emission units(s) involved? ☐ Yes ☐ No

20. Does the manufacturer guarantee the control efficiency of the control equipment? ☐ Yes ☐ No (If Yes, attach and label manufacturer guarantee)

	Pollutant Controlled					
	PM	PM10	SO_2	NOx	VOC	CO
Control Efficiency						

21. If manufacturer's data is not available, attach a separate sheet of paper to provide the control equipment design specifications and performance data to support the above mentioned control efficiency.

EMISSION UNIT OPERATING SCHEDULE (hours/day, hours/year, or other)

22.	Actual Operation:	8424
23.	Maximum Operation:	8760

REQUESTED LIMITS

24. Are you requesting any permit limits? ☐ Yes ☒ No (If Yes, indicate all that apply below)

- ☐ Operation Hour Limit(s):
- ☐ Production Limit(s):
- ☐ Material Usage Limit(s):
- ☐ Limits Based on Stack Testing: Please attach all relevant stack testing summary reports
- ☐ Other:

25. Rationale for Requesting the Limit(s):

Idahoan Foods, LLC Idaho Falls Facility P-2012.0020 PROJ 61031

Source ID No.	Sources	Control Equipment	Emission Point ID No.
11	Emissions Unit Name: Air Makeup Unit #2 Flake room Manufacturer: King Model: 6225 MNHRB Burner Model: NA Manufacture Date: 1971 Heat input rating: 2.5 MMBtu/hr Max. production: NA T/hr Fuel: Natural Gas Fuel consumption: 2,418 scf/hr		

DEQ AIR QUALITY PROGRAM
1410 N. Hilton, Boise, ID 83706
For assistance, call the
Air Permit Hotline – 1-877-5PERMIT

Emissions Unit - General **Form EU0**
Revision 4
08/28/08

Please see instructions on page 2 before filling out the form.

IDENTIFICATION

1. Company Name:	2. Facility Name:	3. Facility ID No:
Idahoan Foods, LLC	Idaho Falls Facility	019-00038

4. Brief Project Description: Replacing Three Proctors with 2 Fluid Bed Dryers and Adding a Drum Dryer

EMISSIONS UNIT (PROCESS) IDENTIFICATION & DESCRIPTION

5.	Emissions Unit (EU) Name:	AIR MAKEUP UNIT #3 BAG ROOM
6.	EU ID Number:	12
7.	EU Type:	☐ New Source ☐ Unpermitted Existing Source ☒ Modification to a Permitted Source -- Previous Permit #:T2-2009.0027 Date Issued: 5/9/2008
8.	Manufacturer:	UNKNOWN
9.	Model:	N/A
10..	Maximum Capacity:	5 Million BTU/HR
11.	Date of Construction:	1971
12.	Date of Modification (if any):	
13.	Is this a Controlled Emission Unit?	☒ No ☐ Yes If Yes, complete the following section. If No, go to line 22.

EMISSIONS CONTROL EQUIPMENT

14. Control Equipment Name and ID:

15. Date of Installation: 16. Date of Modification (if any):

17. Manufacturer and Model Number:

18. ID(s) of Emission Unit Controlled:

19. Is operating schedule different than emission units(s) involved? ☐ Yes ☐ No

20. Does the manufacturer guarantee the control efficiency of the control equipment? ☐ Yes ☐ No (If Yes, attach and label manufacturer guarantee)

	Pollutant Controlled					
	PM	PM10	SO_2	NOx	VOC	CO
Control Efficiency						

21. If manufacturer's data is not available, attach a separate sheet of paper to provide the control equipment design specifications and performance data to support the above mentioned control efficiency.

EMISSION UNIT OPERATING SCHEDULE (hours/day, hours/year, or other)

22.	Actual Operation:	8424
23.	Maximum Operation:	8760

REQUESTED LIMITS

24. Are you requesting any permit limits? ☐ Yes ☒ No (If Yes, indicate all that apply below)

- ☐ Operation Hour Limit(s):
- ☐ Production Limit(s):
- ☐ Material Usage Limit(s):
- ☐ Limits Based on Stack Testing: Please attach all relevant stack testing summary reports
- ☐ Other:

25. Rationale for Requesting the Limit(s):

Idahoan Foods, LLC Idaho Falls Facility P-2012.0020 PROJ 61031

Source ID No.	Sources	Control Equipment	Emission Point ID No.
12	Emissions Unit Name: Air Makeup Unit #3 Bag Room Manufacturer: hartzell Model: 81-60-P3 Burner Model: NA Manufacture Date: 1971 Heat input rating: 5 MMBtu/hr Max. production: NA T/hr Fuel: Natural Gas Fuel consumption: 4,836 scf/hr		

DEQ AIR QUALITY PROGRAM
1410 N. Hilton, Boise, ID 83706
For assistance, call the
Air Permit Hotline – 1-877-5PERMIT

Emissions Unit - General **Form EU0**
Revision 4
08/28/08

Please see instructions on page 2 before filling out the form.

IDENTIFICATION

1. Company Name:	2. Facility Name:	3. Facility ID No:
Idahoan Foods, LLC	Idaho Falls Facility	019-00038

4. Brief Project Description: Replacing Three Proctors with 2 Fluid Bed Dryers and Adding a Drum Dryer

EMISSIONS UNIT (PROCESS) IDENTIFICATION & DESCRIPTION

5.	Emissions Unit (EU) Name:	AIR MAKEUP UNIT #4 WAREHOUSE
6.	EU ID Number:	13
7.	EU Type:	☒ New Source ☐ Unpermitted Existing Source ☐ Modification to a Permitted Source -- Previous Permit #:T2-2009.0027 Date Issued: 5/9/2008
8.	Manufacturer:	RAYCO
9.	Model:	GAS PAC 500
10..	Maximum Capacity:	5.5 MILLION BTU/HR
11.	Date of Construction:	2012
12.	Date of Modification (if any):	NA
13.	Is this a Controlled Emission Unit?	☒ No ☐ Yes If Yes, complete the following section. If No, go to line 22.

EMISSIONS CONTROL EQUIPMENT

14. Control Equipment Name and ID:

15. Date of Installation: 16. Date of Modification (if any):

17. Manufacturer and Model Number:

18. ID(s) of Emission Unit Controlled:

19. Is operating schedule different than emission units(s) involved? ☐ Yes ☐ No

20. Does the manufacturer guarantee the control efficiency of the control equipment? ☐ Yes ☐ No (If Yes, attach and label manufacturer guarantee)

	Pollutant Controlled					
	PM	PM10	SO_2	NOx	VOC	CO
Control Efficiency						

21. If manufacturer's data is not available, attach a separate sheet of paper to provide the control equipment design specifications and performance data to support the above mentioned control efficiency.

EMISSION UNIT OPERATING SCHEDULE (hours/day, hours/year, or other)

22.	Actual Operation:	8424
23.	Maximum Operation:	8760

REQUESTED LIMITS

24. Are you requesting any permit limits? ☐ Yes ☒ No (If Yes, indicate all that apply below)

☐ Operation Hour Limit(s):

☐ Production Limit(s):

☐ Material Usage Limit(s):

☐ Limits Based on Stack Testing: Please attach all relevant stack testing summary reports

☐ Other:

25. Rationale for Requesting the Limit(s):

Idahoan Foods, LLC Idaho Falls Facility P-2012.0020 PROJ 61031

Source ID No.	Sources	Control Equipment	Emission Point ID No.
13	Emissions Unit Name: Air Makeup Unit #4 Warehouse Manufacturer: REYCO Model: Gas Pac 500 Burner Model: Gas Pac 500 Manufacture Date: 2012 Heat input rating: 5.5 MMBtu/hr Max. production: NA T/hr Fuel: Natural Gas Fuel consumption: 7,250 scf/hr		

DEQ AIR QUALITY PROGRAM
1410 N. Hilton, Boise, ID 83706
For assistance, call the
Air Permit Hotline – 1-877-5PERMIT

Emissions Unit - General **Form EU0**
Revision 4
08/28/08

Please see instructions on page 2 before filling out the form.

IDENTIFICATION

1. Company Name:	2. Facility Name:	3. Facility ID No:
Idahoan Foods, LLC	Idaho Falls Facility	019-00038

4. Brief Project Description: Replacing Three Proctors with 2 Fluid Bed Dryers and Adding a Drum Dryer

EMISSIONS UNIT (PROCESS) IDENTIFICATION & DESCRIPTION

5.	Emissions Unit (EU) Name:	BAG HOUSE, PRODUCT TRANSFER RAW , CREAMY MASH
6.	EU ID Number:	14
7.	EU Type:	☒ New Source ☐ Unpermitted Existing Source ☐ Modification to a Permitted Source -- Previous Permit #:T2-2009.0027 Date Issued: 5/9/2008
8.	Manufacturer:	Joyeno
9.	Model:	Unknown
10..	Maximum Capacity:	.75 T/HR
11.	Date of Construction:	1985
12.	Date of Modification (if any):	2012
13.	Is this a Controlled Emission Unit?	☒ No ☐ Yes If Yes, complete the following section. If No, go to line 22.

EMISSIONS CONTROL EQUIPMENT

14. Control Equipment Name and ID:

15. Date of Installation: 1985 16. Date of Modification (if any):

17. Manufacturer and Model Number:

18. ID(s) of Emission Unit Controlled:

19. Is operating schedule different than emission units(s) involved? ☐ Yes ☐ No

20. Does the manufacturer guarantee the control efficiency of the control equipment? ☐ Yes ☐ No (If Yes, attach and label manufacturer guarantee)

	Pollutant Controlled					
	PM	PM10	SO_2	NOx	VOC	CO
Control Efficiency	99.97%	99.97%				

21. If manufacturer's data is not available, attach a separate sheet of paper to provide the control equipment design specifications and performance data to support the above mentioned control efficiency.

EMISSION UNIT OPERATING SCHEDULE (hours/day, hours/year, or other)

22.	Actual Operation:	8424
23.	Maximum Operation:	8760

REQUESTED LIMITS

24. Are you requesting any permit limits? ☐ Yes ☒ No (If Yes, indicate all that apply below)

☐ Operation Hour Limit(s):

☐ Production Limit(s):

☐ Material Usage Limit(s):

☐ Limits Based on Stack Testing: Please attach all relevant stack testing summary reports

☐ Other:

25. Rationale for Requesting the Limit(s):

Idahoan Foods, LLC Idaho Falls Facility P-2012.0020 PROJ 61031

Source ID No.	Sources	Control Equipment	Emission Point ID No.
14	Emissions Unit Name: Creamy Mash Loading Station Manufacturer: Joyeno Model: Unknown Burner Model: NA Manufacture Date: 1985 Heat input rating: MMBtu/hr Max. production: .75 T/hr Fuel: NA Fuel consumption: NA gal/hr	Control Device Name: Creamy Mash Loading Station Manufacturer: Joyeno Model: Unknown Type: Bag house Number of bags: 6 Air to Cloth ratio: 6 to 1 PM_{10} control efficiency: 99.97%	Exit height: 36 ft Exit diameter: 2.3 ft Exit flow rate: 1050 acfm Exit temperature: 85°F

DEQ AIR QUALITY PROGRAM
1410 N. Hilton, Boise, ID 83706
For assistance, call the
Air Permit Hotline – 1-877-5PERMIT

Emissions Unit - General **Form EU0**
Revision 4
08/28/08

Please see instructions on page 2 before filling out the form.

IDENTIFICATION

1. Company Name:	2. Facility Name:	3. Facility ID No:
Idahoan Foods, LLC	Idaho Falls Facility	019-00038

4. Brief Project Description: Replacing Three Proctors with 2 Fluid Bed Dryers and Adding a Drum Dryer

EMISSIONS UNIT (PROCESS) IDENTIFICATION & DESCRIPTION

5.	Emissions Unit (EU) Name:	BAG HOUSE, EXHAUST, DUST COLLECTOR SYSTEM
6.	EU ID Number:	15
7.	EU Type:	☒ New Source ☐ Unpermitted Existing Source ☐ Modification to a Permitted Source -- Previous Permit #:T2-2009.0027 Date Issued: 5/9/2008
8.	Manufacturer:	UNKNOWN
9.	Model:	UNKNOWN
10..	Maximum Capacity:	.0005 T/HR
11.	Date of Construction:	1985
12.	Date of Modification (if any):	2012
13.	Is this a Controlled Emission Unit?	☒ No ☐ Yes If Yes, complete the following section. If No, go to line 22.

EMISSIONS CONTROL EQUIPMENT

14. Control Equipment Name and ID:

15. Date of Installation: 1985 16. Date of Modification (if any):

17. Manufacturer and Model Number:

18. ID(s) of Emission Unit Controlled:

19. Is operating schedule different than emission units(s) involved? ☐ Yes ☐ No

20. Does the manufacturer guarantee the control efficiency of the control equipment? ☐ Yes ☐ No (If Yes, attach and label manufacturer guarantee)

	Pollutant Controlled					
	PM	PM10	SO_2	NOx	VOC	CO
Control Efficiency	99.97%	99.97%				

21. If manufacturer's data is not available, attach a separate sheet of paper to provide the control equipment design specifications and performance data to support the above mentioned control efficiency.

EMISSION UNIT OPERATING SCHEDULE (hours/day, hours/year, or other)

22.	Actual Operation:	8424
23.	Maximum Operation:	8760

REQUESTED LIMITS

24. Are you requesting any permit limits? ☐ Yes ☒ No (If Yes, indicate all that apply below)

- ☐ Operation Hour Limit(s):
- ☐ Production Limit(s):
- ☐ Material Usage Limit(s):
- ☐ Limits Based on Stack Testing: Please attach all relevant stack testing summary reports
- ☐ Other:

25. Rationale for Requesting the Limit(s):

Idahoan Foods, LLC Idaho Falls Facility P-2012.0020 PROJ 61031

Source ID No.	Sources	Control Equipment	Emission Point ID No.
15	Emissions Unit Name: Bag House Exhaust Dust Collector System Manufacturer: Unknown Model: Unknown Burner Model: NA Manufacture Date: 1985 Heat input rating: NA MMBtu/hr Max. production: .0005 T/hr Fuel: NA Fuel consumption: NA gal/hr	Control Device Name: Bag House Exhaust Dust Collector System Manufacturer: Unknown Model: Unknown Type: Bag House Number of bags: Unknown Air to Cloth ratio: Unknown to 1 PM_{10} control efficiency: 99.97%	Exit height: 40 ft Exit diameter: .7 ft Exit flow rate: 1050 acfm Exit temperature: 85 °F

DEQ AIR QUALITY PROGRAM
1410 N. Hilton, Boise, ID 83706
For assistance, call the
Air Permit Hotline – 1-877-5PERMIT

Emissions Unit - General **Form EU0**
Revision 4
08/28/08

Please see instructions on page 2 before filling out the form.

IDENTIFICATION

1. Company Name:	2. Facility Name:	3. Facility ID No:
Idahoan Foods, LLC	Idaho Falls Facility	019-00038

4. Brief Project Description: Replacing Three Proctors with 2 Fluid Bed Dryers and Adding a Drum Dryer

EMISSIONS UNIT (PROCESS) IDENTIFICATION & DESCRIPTION

5.	Emissions Unit (EU) Name:	CYCLONE, BURNER/EXHAUST, FLUID BED DRYER, REAL #1
6.	EU ID Number:	16
7.	EU Type:	☒ New Source ☐ Unpermitted Existing Source ☐ Modification to a Permitted Source -- Previous Permit #:T2-2009.0027 Date Issued: 5/9/2008
8.	Manufacturer:	ECLIPSE (BURNER) / IDAHO STEEL (CYCLONE)
9.	Model:	TAG1000 / HCYCLONE
10..	Maximum Capacity:	10 MBTU/HR / 1.88 T/HR
11.	Date of Construction:	2012
12.	Date of Modification (if any):	NA
13.	Is this a Controlled Emission Unit?	☒ No ☐ Yes If Yes, complete the following section. If No, go to line 22.

EMISSIONS CONTROL EQUIPMENT

14. Control Equipment Name and ID:

15. Date of Installation: 2012 16. Date of Modification (if any):

17. Manufacturer and Model Number:

18. ID(s) of Emission Unit Controlled:

19. Is operating schedule different than emission units(s) involved? ☐ Yes ☐ No

20. Does the manufacturer guarantee the control efficiency of the control equipment? ☐ Yes ☐ No (If Yes, attach and label manufacturer guarantee)

	Pollutant Controlled					
	PM	PM10	SO_2	NOx	VOC	CO
Control Efficiency	98%	98%				

21. If manufacturer's data is not available, attach a separate sheet of paper to provide the control equipment design specifications and performance data to support the above mentioned control efficiency.

EMISSION UNIT OPERATING SCHEDULE (hours/day, hours/year, or other)

22.	Actual Operation:	8424
23.	Maximum Operation:	8760

REQUESTED LIMITS

24. Are you requesting any permit limits? ☐ Yes ☒ No (If Yes, indicate all that apply below)

- ☐ Operation Hour Limit(s):
- ☐ Production Limit(s):
- ☐ Material Usage Limit(s):
- ☐ Limits Based on Stack Testing: Please attach all relevant stack testing summary reports
- ☐ Other:

25. Rationale for Requesting the Limit(s):

Idahoan Foods, LLC Idaho Falls Facility P-2012.0020 PROJ 61031

Source ID No.	Sources	Control Equipment	Emission Point ID No.
16	Emissions Unit Name: Cyclone, Burner/Exhaust, Fluid Bed Dryer, Real #1 Manufacturer: Eclipse (Burner)/Idaho Steel (cyclone) Model: TAG 1000/Hcyclone Burner Model: TAG 1000 Manufacture Date: 2012/2012 Heat input rating: 10 MMBtu/hr Max. production: 1.88 T/hr Fuel: Natural Gas Fuel consumption: 9675scf/hr	Control Device Name: Cyclone, Burner/Exhaust, Fluid Bed Dryer, Real #1 Manufacturer: Idaho Steel Inc. Model: H Type: Cyclone Number of bags: NA Air to Cloth ratio: NA PM_{10} control efficiency: 98%	Exit height: 42 ft Exit diameter: 4.2 ft Exit flow rate: 51,000acfm Exit temperature: 160 °F

DEQ AIR QUALITY PROGRAM
1410 N. Hilton, Boise, ID 83706
For assistance, call the
Air Permit Hotline – 1-877-5PERMIT

Emissions Unit - General **Form EU0**
Revision 4
08/28/08

Please see instructions on page 2 before filling out the form.

IDENTIFICATION

1. Company Name:	2. Facility Name:	3. Facility ID No:
Idahoan Foods, LLC	Idaho Falls Facility	019-00038

4. Brief Project Description: Replacing Three Proctors with 2 Fluid Bed Dryers and Adding a Drum Dryer

EMISSIONS UNIT (PROCESS) IDENTIFICATION & DESCRIPTION

5.	Emissions Unit (EU) Name:	CYCLONE, BURNER/EXHAUST, FLUID BED DRYER, REAL #2
6.	EU ID Number:	17
7.	EU Type:	☒ New Source ☐ Unpermitted Existing Source ☐ Modification to a Permitted Source -- Previous Permit #:T2-2009.0027 Date Issued: 5/9/2008
8.	Manufacturer:	ECLIPS (BURNER) / IDAHO STEEL (CYCLONE)
9.	Model:	TAG 1000 / HCYCLONE
10..	Maximum Capacity:	10 MBTU/Hr / 1.88 T/Hr
11.	Date of Construction:	2012
12.	Date of Modification (if any):	NA
13.	Is this a Controlled Emission Unit?	☒ No ☐ Yes If Yes, complete the following section. If No, go to line 22.

EMISSIONS CONTROL EQUIPMENT

14. Control Equipment Name and ID:

15. Date of Installation: 2012 16. Date of Modification (if any):

17. Manufacturer and Model Number:

18. ID(s) of Emission Unit Controlled:

19. Is operating schedule different than emission units(s) involved? ☐ Yes ☐ No

20. Does the manufacturer guarantee the control efficiency of the control equipment? ☐ Yes ☐ No (If Yes, attach and label manufacturer guarantee)

	Pollutant Controlled					
	PM	PM10	SO_2	NOx	VOC	CO
Control Efficiency	98%	98%				

21. If manufacturer's data is not available, attach a separate sheet of paper to provide the control equipment design specifications and performance data to support the above mentioned control efficiency.

EMISSION UNIT OPERATING SCHEDULE (hours/day, hours/year, or other)

22.	Actual Operation:	8424
23.	Maximum Operation:	8760

REQUESTED LIMITS

24. Are you requesting any permit limits? ☐ Yes ☒ No (If Yes, indicate all that apply below)

- ☐ Operation Hour Limit(s):
- ☐ Production Limit(s):
- ☐ Material Usage Limit(s):
- ☐ Limits Based on Stack Testing: Please attach all relevant stack testing summary reports
- ☐ Other:

25. Rationale for Requesting the Limit(s):

Idahoan Foods, LLC Idaho Falls Facility P-2012.0020 PROJ 61031

Source ID No.	Sources	Control Equipment	Emission Point ID No.
17	Emissions Unit Name: Cyclone Burner/Exhaust Fluid Bed Dryer, Real #2 Manufacturer: Eclipse (Burner)/ Idaho Steel (Cyclone) Model: TAG 1000/Hcyclone Burner Model: TAG 1000 Manufacture Date: 2012/2012 Heat input rating: 10 MMBtu/hr Max. production: 1.88 T/hr Fuel: Natural Gas Fuel consumption: 9675 scf/hr	Control Device Name: Cyclone Burner/Exhaust Fluid Bed Dryer, Real #2 Manufacturer: : Idaho Steel Model: H Type: Cyclone Number of bags: NA Air to Cloth ratio: NA PM_{10} control efficiency: 98%	Exit height: 42 ft Exit diameter: 4.2 ft Exit flow rate: 51,000acfm Exit temperature: 160 °F

DEQ AIR QUALITY PROGRAM
1410 N. Hilton, Boise, ID 83706
For assistance, call the
Air Permit Hotline – 1-877-5PERMIT

Emissions Unit - General **Form EU0**
Revision 4
08/28/08

Please see instructions on page 2 before filling out the form.

IDENTIFICATION

1. Company Name:	2. Facility Name:	3. Facility ID No:
Idahoan Foods, LLC	Idaho Falls Facility	019-00038

4. Brief Project Description: Replacing Three Proctors with 2 Fluid Bed Dryers and Adding a Drum Dryer

EMISSIONS UNIT (PROCESS) IDENTIFICATION & DESCRIPTION

5.	Emissions Unit (EU) Name:	CYCLONE, EXHAUST, CREAMY MASH
6.	EU ID Number:	18
7.	EU Type:	☒ New Source ☐ Unpermitted Existing Source ☐ Modification to a Permitted Source -- Previous Permit #:T2-2009.0027 Date Issued: 5/9/2008
8.	Manufacturer:	WELLIVER
9.	Model:	6082D1
10..	Maximum Capacity:	.75 T/HR
11.	Date of Construction:	1985
12.	Date of Modification (if any):	2012
13.	Is this a Controlled Emission Unit?	☒ No ☐ Yes If Yes, complete the following section. If No, go to line 22.

EMISSIONS CONTROL EQUIPMENT

14. Control Equipment Name and ID:

15. Date of Installation: 1985 16. Date of Modification (if any):

17. Manufacturer and Model Number:

18. ID(s) of Emission Unit Controlled:

19. Is operating schedule different than emission units(s) involved? ☐ Yes ☐ No

20. Does the manufacturer guarantee the control efficiency of the control equipment? ☐ Yes ☐ No (If Yes, attach and label manufacturer guarantee)

	Pollutant Controlled					
	PM	PM10	SO_2	NOx	VOC	CO
Control Efficiency	98%	98%				

21. If manufacturer's data is not available, attach a separate sheet of paper to provide the control equipment design specifications and performance data to support the above mentioned control efficiency.

EMISSION UNIT OPERATING SCHEDULE (hours/day, hours/year, or other)

22.	Actual Operation:	8424
23.	Maximum Operation:	8760

REQUESTED LIMITS

24. Are you requesting any permit limits? ☐ Yes ☒ No (If Yes, indicate all that apply below)

- ☐ Operation Hour Limit(s):
- ☐ Production Limit(s):
- ☐ Material Usage Limit(s):
- ☐ Limits Based on Stack Testing: Please attach all relevant stack testing summary reports
- ☐ Other:

25. Rationale for Requesting the Limit(s):

Idahoan Foods, LLC Idaho Falls Facility P-2012.0020 PROJ 61031

Source ID No.	Sources	Control Equipment	Emission Point ID No.
18	Emissions Unit Name: Cyclone Exhaust Creamy Mash Manufacturer: Welliver Model: 6082D1 Burner Model: NA Manufacture Date: 1985 Heat input rating: NA MMBtu/hr Max. production: .75 T/hr Fuel: Steam Fuel consumption: 0 gal/hr	Control Device Name: Cyclone Exhaust Creamy Mash Manufacturer: Welliver Model: 6082D1 Type: Cyclone Number of bags: NA Air to Cloth ratio: NA PM_{10} control efficiency: 98%	Exit height: 26 ft Exit diameter: 2.7 ft Exit flow rate: 12000 acfm Exit temperature: 160 °F

DEQ AIR QUALITY PROGRAM
1410 N. Hilton, Boise, ID 83706
For assistance, call the
Air Permit Hotline – 1-877-5PERMIT

Emissions Unit - General **Form EU0**
Revision 4
08/28/08

Please see instructions on page 2 before filling out the form.

IDENTIFICATION

1. Company Name:	2. Facility Name:	3. Facility ID No:
Idahoan Foods, LLC	Idaho Falls Facility	019-00038

4. Brief Project Description: Replacing Three Proctors with 2 Fluid Bed Dryers and Adding a Drum Dryer

EMISSIONS UNIT (PROCESS) IDENTIFICATION & DESCRIPTION

5. Emissions Unit (EU) Name:	FLAKER LINE 1&2 VACULIFT
6. EU ID Number:	19
7. EU Type:	☐ New Source ☐ Unpermitted Existing Source ☒ Modification to a Permitted Source -- Previous Permit #:T2-2009.0027 Date Issued: 5/9/2008
8. Manufacturer:	VACULIFT
9. Model:	N/A
10.. Maximum Capacity:	2.43 TONS /HR FLAKE PRODUCTION
11. Date of Construction:	1981
12. Date of Modification (if any):	
13. Is this a Controlled Emission Unit?	☐ No ☒ Yes If Yes, complete the following section. If No, go to line 22.

EMISSIONS CONTROL EQUIPMENT

14. Control Equipment Name and ID:	
15. Date of Installation:	1981 16. Date of Modification (if any):
17. Manufacturer and Model Number:	VACULIFT
18. ID(s) of Emission Unit Controlled:	
19. Is operating schedule different than emission units(s) involved?	☐ Yes ☒ No
20. Does the manufacturer guarantee the control efficiency of the control equipment?	☐ Yes ☒ No (If Yes, attach and label manufacturer guarantee)

	Pollutant Controlled					
	PM	PM10	SO_2	NOx	VOC	CO
Control Efficiency	95%	95%				

21. If manufacturer's data is not available, attach a separate sheet of paper to provide the control equipment design specifications and performance data to support the above mentioned control efficiency.

EMISSION UNIT OPERATING SCHEDULE (hours/day, hours/year, or other)

22. Actual Operation:	8424
23. Maximum Operation:	8760

REQUESTED LIMITS

24. Are you requesting any permit limits? ☐ Yes ☒ No (If Yes, indicate all that apply below)

- ☐ Operation Hour Limit(s):
- ☐ Production Limit(s):
- ☐ Material Usage Limit(s):
- ☐ Limits Based on Stack Testing: Please attach all relevant stack testing summary reports
- ☐ Other:

25. Rationale for Requesting the Limit(s):

Idahoan Foods, LLC Idaho Falls Facility P-2012.0020 PROJ 61031

Source ID No.	Sources	Control Equipment	Emission Point ID No.
19	Emissions Unit Name: Bag House Flake Tank Rejects Manufacturer: Vaculift Model: None Burner Model: NA Manufacture Date: 1981 Heat input rating: NA MMBtu/hr Max. production: 2.43 T/hr Fuel: NA Fuel consumption: NA gal/hr	Control Device Name: Bag House Flake Tank Rejects Manufacturer: Vaculift Model: None Type: Cyclone Number of bags: NA Air to Cloth ratio: NA PM_{10} control efficiency: 95%	Exit height: 39 ft Exit diameter: .8 ft Exit flow rate: 1140 acfm Exit temperature: 110 °F

From: Leo Herbert <lherbert@idahoan.com>
Sent: Friday, June 22, 2012 9:59 AM
To: Shawnee Chen
Subject: RE: IDAHOAN FOODS, LLC - IDAHO FALLS - P-2012.0020 PROJ 61031 - E-Transmittal of second incompleteness letter. official coyp
Attachments: Letter to Shawnee 6-22-12.pdf

Shawnee,

I have attached the efficiencies from the manufactures, and a response to your questions.

We will talk in the phone conference in a few minutes.

Thank You,
Leo Herbert
Corporate Environmental Manager

Idahoan Foods, LLC
208-754-8194
lherbert@Idahoan.com

-----Original Message-----
From: Shawnee.Chen@deq.idaho.gov [mailto:Shawnee.Chen@deq.idaho.gov]
Sent: Tuesday, June 19, 2012 5:00 PM
To: Leo Herbert
Cc: Kevin.Schilling@deq.idaho.gov; Shawnee.Chen@deq.idaho.gov
Subject: IDAHOAN FOODS, LLC - IDAHO FALLS - P-2012.0020 PROJ 61031 - E-Transmittal of second incompleteness letter. official coyp

Dear Mr. Herbert:

The attached file has been saved in PDF format and constitutes the official transmittal. A hard copy will not follow.

I have also attached the EI verification spreadsheet for you to review and comment.

Thanks and have a great day!
Shawnee
208-373-0176

Idahoan Foods, LLC
P.O. Box 130 529 North 3500 East Lewisville, Idaho 83431
208.754.4686 800.635.6100 www.idahoan.com

Process Information Reply to June 19th Letter from

Shawnee Chen
Senior Air Quality Engineer
Air Quality Division, IDEQ

Permit No. P-2012.0020 PROJ 61031

Dear Mrs. Chen

1. Process description for Real Lines #1 and #2. Potato dehydration equipment.

2. Products made on Real Lines #1 and #2. Dehydrated mash potato products.

3. Day Tanks function. The Day Tanks serve as a holding point for flake until it is needed in the later processes.

4. Throughput value for Baghouse Exhaust Dust Collector System (#22) comes from plant measurements from similar dust collectors systems.

5. Source #25 Cyclone Exhaust Creamy Mash Comes from a steam heated Process.

6. The two bin dryers listed in the old permit were part of the old system that has been removed and will not be part of the new Permit.

7. Comments on the Emission inventory verification calculations spreadsheet. I would say that your sheet does not account for cyclone and Baghouse Emission control reductions.

Idahoan Foods, LLC
P.O. Box 130 529 North 3500 East Lewisville, Idaho 83431
208.754.4686 800.635.6100 www.idahoan.com

8. 0.003 Flake PM Bases. See attached chart

9. Supporting information for control efficiency of each Baghouse & Cyclone.

   (See attached sheets)

Thank you,

Leo Herbert

~Leo Herbert~
Corporate Environmental Manager
Idahoan Foods, LLC
208-754-8194
lherbert@Idahoan.com

				% Efficiency	Grain Loading Guarantee
14	Bag house	Day Tank "A"	Real Line	99.9	North Monson
15	Bag house	Day Tank "B"	Real Line	99.9	North Monson
16	Bag house	Product Transfer	Real Line 1	99.9	North Monson
17	Bag house	Product Transfer	Real Line 2	99.9	North Monson
18	Bag house	Finished Product	Real Line 1	99.9	North Monson
19	Bag house	Finished Product	Real Line 2	99.9	North Monson
20	Bag house	Product Transfer Raw	Creamy Mash	99.9	North Monson
21	Bag house	Finished Product Transfer	Creamy Mash	99.9	North Monson
22	Bag house	Exhaust	Dust Collector System	99.9	North Monson
23	Cyclone	Burner/Exhaust, Fluid Bed Dryer	Real Line 1	95.0	Vacu-lift Company
24	Cyclone	Burner/Exhaust, Fluid Bed Dryer	Real Line 2	95.0	Vacu-lift Company
25	Cyclone	Exhaust	Creamy Mash	95.0	Vacu-lift Company
26	Bag house	Flake Tank Rejects		99.9	North Monson

FABRIC FILTER EFFICIENCY STATEMENT FOR POLYESTER FELT BAGS

Company: North Monsen
Reference: CO171473
Equipment: F15214-168M
Application: Potato Flakes with 542 CFM Air

K-Tron warrants its filter elements to be free of mechanical defects for one year from the date of shipment in accordance with the "Warranties" statement included with the original proposal.

K-Tron also warrants the emissions of its fabric filter unit utilizing 542 g/m^2 [16 oz/yd^2] Polyester felt filter bags when properly applied, installed, and maintained when operated per the design parameters referenced in the original proposal and in accordance with the Installation/Operation Manual, will be a minimum of 99.9% efficient by mass and emit no more than .0687 grams per dry, standard cubic meter of gas [0.03 grains per dry, standard cubic foot of gas] based on dry dust particle size of 2 microns and larger.

Improper installation or operations outside the stated parameters and /or water, oil, or unintended chemical exposures will nullify the "Efficiency" warrants. K-Tron shall not be held responsible for any failures or excess emissions due to upset operating conditions.

Under no circumstances will K-Tron be liable or responsible for incidental or consequential damages.

Senders Name: Patrick Mahoney
Title: Global Systems Manager
Date: 6/22/12

VACU-LIFT COMPANY, INC.

ENGINEERS AND MANUFACTURERS
SPRAY DRIED PRODUCTS

MAILING: P.O. BOX 129
OFFICE : 12 FILBERT STREET
SAUSALITO, CALIFORNIA 94965

TEL : (415) 331-4095
FAX : (415) 331-4099

CALIFORNIA
MANUFACTURING PLANTS

STOCKTON
PETALUMA
MODESTO

DATE: May 2, 1996 Page 1 of 1

TO: Idaho Fresh-Pak, Inc. Att: Todd Scott Fax # (208) 754-0094

FROM: Knud Wibroe Idaho1

Dear Scott,

RE: Efficiency of Vacu-Lift Units

We confirm that our VACU-LIFT pneumatic conveyor system cyclones work with an efficiency as follow:

95% for less than 10 microns
98.9% between 10 and 25
99.5% between 25 and 50
99.9% for over 50 microns

Very truly yours,
VACU-LIFT COMPANY, INC.

Knud Wibroe

Figure 6-4 Potato Flake Size by Percentage

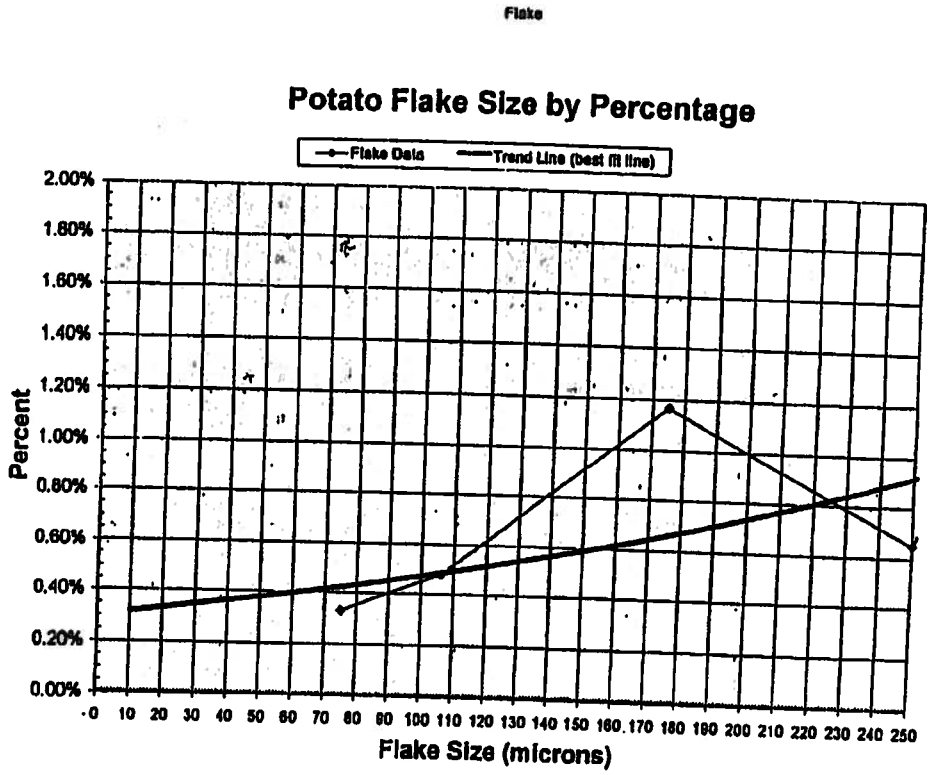

DEQ AIR QUALITY PROGRAM
1410 N. Hilton, Boise, ID 83706
For assistance, call the
Air Permit Hotline – 1-877-5PERMIT

Emissions Unit - General **Form EU0**
Revision 4
08/28/08

Please see instructions on page 2 before filling out the form.

IDENTIFICATION

1. Company Name:	2. Facility Name:	3. Facility ID No:
Idahoan Foods, LLC	Idaho Falls Facility	019-00038

4. Brief Project Description: Replacing Three Proctors with 2 Fluid Bed Dryers and Adding a Drum Dryer

EMISSIONS UNIT (PROCESS) IDENTIFICATION & DESCRIPTION

5.	Emissions Unit (EU) Name:	BOILER # 1
6.	EU ID Number:	1
7.	EU Type:	☐ New Source ☐ Unpermitted Existing Source ☒ Modification to a Permitted Source -- Previous Permit #:T2-2009.0027 Date Issued: 5/9/2008
8.	Manufacturer:	CLEVER BROOKS
9.	Model:	WT200X-CN5
10..	Maximum Capacity:	61.6 MILLION BTU/HR
11.	Date of Construction:	1974
12.	Date of Modification (if any):	1981
13.	Is this a Controlled Emission Unit?	☒ No ☐ Yes If Yes, complete the following section. If No, go to line 22.

EMISSIONS CONTROL EQUIPMENT

14. Control Equipment Name and ID:

15. Date of Installation: 16. Date of Modification (if any):

17. Manufacturer and Model Number:

18. ID(s) of Emission Unit Controlled:

19. Is operating schedule different than emission units(s) involved? ☐ Yes ☐ No

20. Does the manufacturer guarantee the control efficiency of the control equipment? ☐ Yes ☐ No (If Yes, attach and label manufacturer guarantee)

	Pollutant Controlled					
	PM	PM10	SO_2	NOx	VOC	CO
Control Efficiency						

21. If manufacturer's data is not available, attach a separate sheet of paper to provide the control equipment design specifications and performance data to support the above mentioned control efficiency.

EMISSION UNIT OPERATING SCHEDULE (hours/day, hours/year, or other)

22.	Actual Operation:	8424
23.	Maximum Operation:	8760

REQUESTED LIMITS

24. Are you requesting any permit limits? ☐ Yes ☒ No (If Yes, indicate all that apply below)

- ☐ Operation Hour Limit(s):
- ☐ Production Limit(s):
- ☐ Material Usage Limit(s):
- ☐ Limits Based on Stack Testing: Please attach all relevant stack testing summary reports
- ☐ Other:

25. Rationale for Requesting the Limit(s):

DEQ AIR QUALITY PROGRAM
1410 N. Hilton, Boise, ID 83706
For assistance, call the
Air Permit Hotline -- 1-877-5PERMIT

Emissions Unit - General **Form EU0**
Revision 4
08/28/08

Please see instructions on page 2 before filling out the form.

IDENTIFICATION

1. Company Name:	2. Facility Name:	3. Facility ID No:
Idahoan Foods, LLC	Idaho Falls Facility	019-00038

4. Brief Project Description: Replacing Three Proctors with 2 Fluid Bed Dryers and Adding a Drum Dryer

EMISSIONS UNIT (PROCESS) IDENTIFICATION & DESCRIPTION

5.	Emissions Unit (EU) Name:	BOILER # 2
6.	EU ID Number:	2
7.	EU Type:	☐ New Source ☐ Unpermitted Existing Source ☒ Modification to a Permitted Source -- Previous Permit #:T2-2009.0027 Date Issued: 5/9/2008
8.	Manufacturer:	CLEVER BROOKS
9.	Model:	L34
10..	Maximum Capacity:	26.7 MILLION BTU/HR
11.	Date of Construction:	1968
12.	Date of Modification (if any):	1980
13.	Is this a Controlled Emission Unit?	☒ No ☐ Yes If Yes, complete the following section. If No, go to line 22.

EMISSIONS CONTROL EQUIPMENT

14. Control Equipment Name and ID:

15. Date of Installation: 16. Date of Modification (if any):

17. Manufacturer and Model Number:

18. ID(s) of Emission Unit Controlled:

19. Is operating schedule different than emission units(s) involved? ☐ Yes ☐ No

20. Does the manufacturer guarantee the control efficiency of the control equipment? ☐ Yes ☐ No (If Yes, attach and label manufacturer guarantee)

	Pollutant Controlled					
	PM	PM10	SO_2	NOx	VOC	CO
Control Efficiency						

21. If manufacturer's data is not available, attach a separate sheet of paper to provide the control equipment design specifications and performance data to support the above mentioned control efficiency.

EMISSION UNIT OPERATING SCHEDULE (hours/day, hours/year, or other)

22.	Actual Operation:	8424
23.	Maximum Operation:	8760

REQUESTED LIMITS

24. Are you requesting any permit limits? ☐ Yes ☒ No (If Yes, indicate all that apply below)

- ☐ Operation Hour Limit(s):
- ☐ Production Limit(s):
- ☐ Material Usage Limit(s):
- ☐ Limits Based on Stack Testing: Please attach all relevant stack testing summary reports
- ☐ Other:

25. Rationale for Requesting the Limit(s):

DEQ AIR QUALITY PROGRAM
1410 N. Hilton, Boise, ID 83706
For assistance, call the
Air Permit Hotline – 1-877-5PERMIT

Emissions Unit - General **Form EU0**
Revision 4
08/28/08

Please see instructions on page 2 before filling out the form.

IDENTIFICATION

1. Company Name:	2. Facility Name:	3. Facility ID No:
Idahoan Foods, LLC	Idaho Falls Facility	019-00038

4. Brief Project Description: Replacing Three Proctors with 2 Fluid Bed Dryers and Adding a Drum Dryer

EMISSIONS UNIT (PROCESS) IDENTIFICATION & DESCRIPTION

5.	Emissions Unit (EU) Name:	DRYER, FLAKER/DRUM TYPE # 1
6.	EU ID Number:	3
7.	EU Type:	☐ New Source ☐ Unpermitted Existing Source ☒ Modification to a Permitted Source -- Previous Permit #:T2-2009.0027 Date Issued: 5/9/2008
8.	Manufacturer:	BLAW KNOX
9.	Model:	
10..	Maximum Capacity:	0.43 TONS /HR FLAKE PRODUCTION
11.	Date of Construction:	1974
12.	Date of Modification (if any):	N/A
13.	Is this a Controlled Emission Unit?	☒ No ☐ Yes If Yes, complete the following section. If No, go to line 22.

EMISSIONS CONTROL EQUIPMENT

14. Control Equipment Name and ID:

15. Date of Installation: 16. Date of Modification (if any):

17. Manufacturer and Model Number:

18. ID(s) of Emission Unit Controlled:

19. Is operating schedule different than emission units(s) involved? ☐ Yes ☐ No

20. Does the manufacturer guarantee the control efficiency of the control equipment? ☐ Yes ☐ No (If Yes, attach and label manufacturer guarantee)

	Pollutant Controlled					
	PM	PM10	SO_2	NOx	VOC	CO
Control Efficiency						

21. If manufacturer's data is not available, attach a separate sheet of paper to provide the control equipment design specifications and performance data to support the above mentioned control efficiency.

EMISSION UNIT OPERATING SCHEDULE (hours/day, hours/year, or other)

22.	Actual Operation:	8424
23.	Maximum Operation:	8760

REQUESTED LIMITS

24. Are you requesting any permit limits? ☐ Yes ☒ No (If Yes, indicate all that apply below)

- ☐ Operation Hour Limit(s):
- ☐ Production Limit(s):
- ☐ Material Usage Limit(s):
- ☐ Limits Based on Stack Testing: Please attach all relevant stack testing summary reports
- ☐ Other:

25. Rationale for Requesting the Limit(s):

DEQ AIR QUALITY PROGRAM
1410 N. Hilton, Boise, ID 83706
For assistance, call the
Air Permit Hotline – 1-877-5PERMIT

Emissions Unit - General **Form EU0**
Revision 4
08/28/08

Please see instructions on page 2 before filling out the form.

IDENTIFICATION

1. Company Name:	2. Facility Name:	3. Facility ID No:
Idahoan Foods, LLC	Idaho Falls Facility	019-00038

4. Brief Project Description: Replacing Three Proctors with 2 Fluid Bed Dryers and Adding a Drum Dryer

EMISSIONS UNIT (PROCESS) IDENTIFICATION & DESCRIPTION

5.	Emissions Unit (EU) Name:	DRYER, FLAKER/DRUM TYPE # 2
6.	EU ID Number:	4
7.	EU Type:	☐ New Source ☐ Unpermitted Existing Source ☒ Modification to a Permitted Source -- Previous Permit #:T2-2009.0027 Date Issued: 5/9/2008
8.	Manufacturer:	BLAW KNOX
9.	Model:	
10..	Maximum Capacity:	0.43 TONS /HR FLAKE PRODUCTION
11.	Date of Construction:	1974
12.	Date of Modification (if any):	N/A
13.	Is this a Controlled Emission Unit?	☒ No ☐ Yes If Yes, complete the following section. If No, go to line 22.

EMISSIONS CONTROL EQUIPMENT

14. Control Equipment Name and ID:

15. Date of Installation: 16. Date of Modification (if any):

17. Manufacturer and Model Number:

18. ID(s) of Emission Unit Controlled:

19. Is operating schedule different than emission units(s) involved? ☐ Yes ☐ No

20. Does the manufacturer guarantee the control efficiency of the control equipment? ☐ Yes ☐ No (If Yes, attach and label manufacturer guarantee)

	Pollutant Controlled					
	PM	PM10	SO_2	NOx	VOC	CO
Control Efficiency						

21. If manufacturer's data is not available, attach a separate sheet of paper to provide the control equipment design specifications and performance data to support the above mentioned control efficiency.

EMISSION UNIT OPERATING SCHEDULE (hours/day, hours/year, or other)

22.	Actual Operation:	8424
23.	Maximum Operation:	8760

REQUESTED LIMITS

24. Are you requesting any permit limits? ☐ Yes ☒ No (If Yes, indicate all that apply below)

- ☐ Operation Hour Limit(s):
- ☐ Production Limit(s):
- ☐ Material Usage Limit(s):
- ☐ Limits Based on Stack Testing: Please attach all relevant stack testing summary reports
- ☐ Other:

25. Rationale for Requesting the Limit(s):

DEQ AIR QUALITY PROGRAM
1410 N. Hilton, Boise, ID 83706
For assistance, call the
Air Permit Hotline – 1-877-5PERMIT

Emissions Unit - General **Form EU0**
Revision 4
08/28/08

Please see instructions on page 2 before filling out the form.

IDENTIFICATION

1. Company Name:	2. Facility Name:	3. Facility ID No:
Idahoan Foods, LLC	Idaho Falls Facility	019-00038

4. Brief Project Description: Replacing Three Proctors with 2 Fluid Bed Dryers and Adding a Drum Dryer

EMISSIONS UNIT (PROCESS) IDENTIFICATION & DESCRIPTION

5.	Emissions Unit (EU) Name:	DRYER, FLAKER/DRUM TYPE # 3
6.	EU ID Number:	5
7.	EU Type:	☐ New Source ☐ Unpermitted Existing Source ☒ Modification to a Permitted Source -- Previous Permit #:T2-2009.0027 Date Issued: 5/9/2008
8.	Manufacturer:	IDAHO STEEL
9.	Model:	
10..	Maximum Capacity:	0.82 TONS /HR FLAKE PRODUCTION
11.	Date of Construction:	2004
12.	Date of Modification (if any):	2011
13.	Is this a Controlled Emission Unit?	☒ No ☐ Yes If Yes, complete the following section. If No, go to line 22.

EMISSIONS CONTROL EQUIPMENT

14. Control Equipment Name and ID:

15. Date of Installation: 16. Date of Modification (if any):

17. Manufacturer and Model Number:

18. ID(s) of Emission Unit Controlled:

19. Is operating schedule different than emission units(s) involved? ☐ Yes ☐ No

20. Does the manufacturer guarantee the control efficiency of the control equipment? ☐ Yes ☐ No (If Yes, attach and label manufacturer guarantee)

	Pollutant Controlled					
	PM	PM10	SO_2	NOx	VOC	CO
Control Efficiency						

21. If manufacturer's data is not available, attach a separate sheet of paper to provide the control equipment design specifications and performance data to support the above mentioned control efficiency.

EMISSION UNIT OPERATING SCHEDULE (hours/day, hours/year, or other)

22.	Actual Operation:	8424
23.	Maximum Operation:	8760

REQUESTED LIMITS

24. Are you requesting any permit limits? ☐ Yes ☒ No (If Yes, indicate all that apply below)

- ☐ Operation Hour Limit(s):
- ☐ Production Limit(s):
- ☐ Material Usage Limit(s):
- ☐ Limits Based on Stack Testing: Please attach all relevant stack testing summary reports
- ☐ Other:

25. Rationale for Requesting the Limit(s):

DEQ AIR QUALITY PROGRAM
1410 N. Hilton, Boise, ID 83706
For assistance, call the
Air Permit Hotline – 1-877-5PERMIT

Emissions Unit - General **Form EU0**
Revision 4
08/28/08

Please see instructions on page 2 before filling out the form.

IDENTIFICATION

1. Company Name:	2. Facility Name:	3. Facility ID No:
Idahoan Foods, LLC	Idaho Falls Facility	019-00038

4. Brief Project Description: Replacing Three Proctors with 2 Fluid Bed Dryers and Adding a Drum Dryer

EMISSIONS UNIT (PROCESS) IDENTIFICATION & DESCRIPTION

5.	Emissions Unit (EU) Name:	DRYER, FLAKER/DRUM TYPE # 4
6.	EU ID Number:	6
7.	EU Type:	☐ New Source ☐ Unpermitted Existing Source ☒ Modification to a Permitted Source -- Previous Permit #:T2-2009.0027 Date Issued: 5/9/2008
8.	Manufacturer:	IDAHO STEEL
9.	Model:	
10..	Maximum Capacity:	0.82 TONS /HR FLAKE PRODUCTION
11.	Date of Construction:	1985
12.	Date of Modification (if any):	2012
13.	Is this a Controlled Emission Unit?	☒ No ☐ Yes If Yes, complete the following section. If No, go to line 22.

EMISSIONS CONTROL EQUIPMENT

14. Control Equipment Name and ID:

15. Date of Installation: 16. Date of Modification (if any):

17. Manufacturer and Model Number:

18. ID(s) of Emission Unit Controlled:

19. Is operating schedule different than emission units(s) involved? ☐ Yes ☐ No

20. Does the manufacturer guarantee the control efficiency of the control equipment? ☐ Yes ☐ No (If Yes, attach and label manufacturer guarantee)

	Pollutant Controlled					
	PM	PM10	SO_2	NOx	VOC	CO
Control Efficiency						

21. If manufacturer's data is not available, attach a separate sheet of paper to provide the control equipment design specifications and performance data to support the above mentioned control efficiency.

EMISSION UNIT OPERATING SCHEDULE (hours/day, hours/year, or other)

22.	Actual Operation:	8424
23.	Maximum Operation:	8760

REQUESTED LIMITS

24. Are you requesting any permit limits? ☐ Yes ☒ No (If Yes, indicate all that apply below)

- ☐ Operation Hour Limit(s):
- ☐ Production Limit(s):
- ☐ Material Usage Limit(s):
- ☐ Limits Based on Stack Testing: Please attach all relevant stack testing summary reports
- ☐ Other:

25. Rationale for Requesting the Limit(s):

DEQ AIR QUALITY PROGRAM
1410 N. Hilton, Boise, ID 83706
For assistance, call the
Air Permit Hotline – 1-877-5PERMIT

Emissions Unit - General **Form EU0**
Revision 4
08/28/08

Please see instructions on page 2 before filling out the form.

IDENTIFICATION

1. Company Name:	2. Facility Name:	3. Facility ID No:
Idahoan Foods, LLC	Idaho Falls Facility	019-00038

4. Brief Project Description: Replacing Three Proctors with 2 Fluid Bed Dryers and Adding a Drum Dryer

EMISSIONS UNIT (PROCESS) IDENTIFICATION & DESCRIPTION

5.	Emissions Unit (EU) Name:	FLAKER LINE 1&2 VACULIFT
6.	EU ID Number:	7
7.	EU Type:	☐ New Source ☐ Unpermitted Existing Source ☒ Modification to a Permitted Source -- Previous Permit #:T2-2009.0027 Date Issued: 5/9/2008
8.	Manufacturer:	VACULIFT
9.	Model:	N/A
10..	Maximum Capacity:	0.86 TONS /HR FLAKE PRODUCTION
11.	Date of Construction:	1981
12.	Date of Modification (if any):	
13.	Is this a Controlled Emission Unit?	☒ No ☐ Yes If Yes, complete the following section. If No, go to line 22.

EMISSIONS CONTROL EQUIPMENT

14. Control Equipment Name and ID:

15. Date of Installation: 16. Date of Modification (if any):

17. Manufacturer and Model Number:

18. ID(s) of Emission Unit Controlled:

19. Is operating schedule different than emission units(s) involved? ☐ Yes ☐ No

20. Does the manufacturer guarantee the control efficiency of the control equipment? ☐ Yes ☐ No (If Yes, attach and label manufacturer guarantee)

	Pollutant Controlled					
	PM	PM10	SO_2	NOx	VOC	CO
Control Efficiency						

21. If manufacturer's data is not available, attach a separate sheet of paper to provide the control equipment design specifications and performance data to support the above mentioned control efficiency.

EMISSION UNIT OPERATING SCHEDULE (hours/day, hours/year, or other)

22.	Actual Operation:	8424
23.	Maximum Operation:	8760

REQUESTED LIMITS

24. Are you requesting any permit limits? ☐ Yes ☒ No (If Yes, indicate all that apply below)

- ☐ Operation Hour Limit(s):
- ☐ Production Limit(s):
- ☐ Material Usage Limit(s):
- ☐ Limits Based on Stack Testing: Please attach all relevant stack testing summary reports
- ☐ Other:

25. Rationale for Requesting the Limit(s):

DEQ AIR QUALITY PROGRAM
1410 N. Hilton, Boise, ID 83706
For assistance, call the
Air Permit Hotline – 1-877-5PERMIT

Emissions Unit - General **Form EU0**
Revision 4
08/28/08

Please see instructions on page 2 before filling out the form.

IDENTIFICATION

1. Company Name:	2. Facility Name:	3. Facility ID No:
Idahoan Foods, LLC	Idaho Falls Facility	019-00038

4. Brief Project Description: Replacing Three Proctors with 2 Fluid Bed Dryers and Adding a Drum Dryer

EMISSIONS UNIT (PROCESS) IDENTIFICATION & DESCRIPTION

5.	Emissions Unit (EU) Name:	FLAKER LINE 3 VACULIFT
6.	EU ID Number:	8
7.	EU Type:	☐ New Source ☐ Unpermitted Existing Source ☒ Modification to a Permitted Source -- Previous Permit #:T2-2009.0027 Date Issued: 5/9/2008
8.	Manufacturer:	VACULIFT
9.	Model:	N/A
10..	Maximum Capacity:	0.82 TONS /HR FLAKE PRODUCTION
11.	Date of Construction:	1995
12.	Date of Modification (if any):	2004
13.	Is this a Controlled Emission Unit?	☒ No ☐ Yes If Yes, complete the following section. If No, go to line 22.

EMISSIONS CONTROL EQUIPMENT

14. Control Equipment Name and ID:

15. Date of Installation: 16. Date of Modification (if any):

17. Manufacturer and Model Number:

18. ID(s) of Emission Unit Controlled:

19. Is operating schedule different than emission units(s) involved? ☐ Yes ☐ No

20. Does the manufacturer guarantee the control efficiency of the control equipment? ☐ Yes ☐ No (If Yes, attach and label manufacturer guarantee)

	Pollutant Controlled					
	PM	PM10	SO_2	NOx	VOC	CO
Control Efficiency						

21. If manufacturer's data is not available, attach a separate sheet of paper to provide the control equipment design specifications and performance data to support the above mentioned control efficiency.

EMISSION UNIT OPERATING SCHEDULE (hours/day, hours/year, or other)

22.	Actual Operation:	8424
23.	Maximum Operation:	8760

REQUESTED LIMITS

24. Are you requesting any permit limits? ☐ Yes ☒ No (If Yes, indicate all that apply below)

- ☐ Operation Hour Limit(s):
- ☐ Production Limit(s):
- ☐ Material Usage Limit(s):
- ☐ Limits Based on Stack Testing: Please attach all relevant stack testing summary reports
- ☐ Other:

25. Rationale for Requesting the Limit(s):

DEQ AIR QUALITY PROGRAM
1410 N. Hilton, Boise, ID 83706
For assistance, call the
Air Permit Hotline – 1-877-5PERMIT

Emissions Unit - General **Form EU0**
Revision 4
08/28/08

Please see instructions on page 2 before filling out the form.

IDENTIFICATION

1. Company Name:	2. Facility Name:	3. Facility ID No:
Idahoan Foods, LLC	Idaho Falls Facility	019-00038

4. Brief Project Description: Replacing Three Proctors with 2 Fluid Bed Dryers and Adding a Drum Dryer

EMISSIONS UNIT (PROCESS) IDENTIFICATION & DESCRIPTION

5.	Emissions Unit (EU) Name:	FLAKER LINE 4 VACULIFT&BAGHOUSE
6.	EU ID Number:	9
7.	EU Type:	☐ New Source ☐ Unpermitted Existing Source ☒ Modification to a Permitted Source -- Previous Permit #:T2-2009.0027 Date Issued: 5/9/2008
8.	Manufacturer:	VACULIFT/SMME
9.	Model:	N/A
10..	Maximum Capacity:	0.82 TONS /HR FLAKE PRODUCTION
11.	Date of Construction:	1995
12.	Date of Modification (if any):	2012
13.	Is this a Controlled Emission Unit?	☒ No ☐ Yes If Yes, complete the following section. If No, go to line 22.

EMISSIONS CONTROL EQUIPMENT

14. Control Equipment Name and ID:

15. Date of Installation: 16. Date of Modification (if any):

17. Manufacturer and Model Number:

18. ID(s) of Emission Unit Controlled:

19. Is operating schedule different than emission units(s) involved? ☐ Yes ☐ No

20. Does the manufacturer guarantee the control efficiency of the control equipment? ☐ Yes ☐ No (If Yes, attach and label manufacturer guarantee)

	Pollutant Controlled					
	PM	PM10	SO_2	NOx	VOC	CO
Control Efficiency						

21. If manufacturer's data is not available, attach a separate sheet of paper to provide the control equipment design specifications and performance data to support the above mentioned control efficiency.

EMISSION UNIT OPERATING SCHEDULE (hours/day, hours/year, or other)

22.	Actual Operation:	8424
23.	Maximum Operation:	8760

REQUESTED LIMITS

24. Are you requesting any permit limits? ☐ Yes ☒ No (If Yes, indicate all that apply below)

- ☐ Operation Hour Limit(s):
- ☐ Production Limit(s):
- ☐ Material Usage Limit(s):
- ☐ Limits Based on Stack Testing: Please attach all relevant stack testing summary reports
- ☐ Other:

25. Rationale for Requesting the Limit(s):

DEQ AIR QUALITY PROGRAM
1410 N. Hilton, Boise, ID 83706
For assistance, call the
Air Permit Hotline – 1-877-5PERMIT

Emissions Unit - General **Form EU0**
Revision 4
08/28/08

Please see instructions on page 2 before filling out the form.

IDENTIFICATION

1. Company Name:	2. Facility Name:	3. Facility ID No:
Idahoan Foods, LLC	Idaho Falls Facility	019-00038

4. Brief Project Description: Replacing Three Proctors with 2 Fluid Bed Dryers and Adding a Drum Dryer

EMISSIONS UNIT (PROCESS) IDENTIFICATION & DESCRIPTION

5.	Emissions Unit (EU) Name:	AIR MAKEUP UNIT #1 WASTE PLANT
6.	EU ID Number:	10
7.	EU Type:	☐ New Source ☐ Unpermitted Existing Source ☒ Modification to a Permitted Source -- Previous Permit #:T2-2009.0027 Date Issued: 5/9/2008
8.	Manufacturer:	UNKNOWN
9.	Model:	N/A
10..	Maximum Capacity:	2.5 Million BTU/HR
11.	Date of Construction:	1971
12.	Date of Modification (if any):	
13.	Is this a Controlled Emission Unit?	☒ No ☐ Yes If Yes, complete the following section. If No, go to line 22.

EMISSIONS CONTROL EQUIPMENT

14. Control Equipment Name and ID:

15. Date of Installation: 16. Date of Modification (if any):

17. Manufacturer and Model Number:

18. ID(s) of Emission Unit Controlled:

19. Is operating schedule different than emission units(s) involved? ☐ Yes ☐ No

20. Does the manufacturer guarantee the control efficiency of the control equipment? ☐ Yes ☐ No (If Yes, attach and label manufacturer guarantee)

	Pollutant Controlled					
	PM	PM10	SO_2	NOx	VOC	CO
Control Efficiency						

21. If manufacturer's data is not available, attach a separate sheet of paper to provide the control equipment design specifications and performance data to support the above mentioned control efficiency.

EMISSION UNIT OPERATING SCHEDULE (hours/day, hours/year, or other)

22.	Actual Operation:	8424
23.	Maximum Operation:	8760

REQUESTED LIMITS

24. Are you requesting any permit limits? ☐ Yes ☒ No (If Yes, indicate all that apply below)

- ☐ Operation Hour Limit(s):
- ☐ Production Limit(s):
- ☐ Material Usage Limit(s):
- ☐ Limits Based on Stack Testing: Please attach all relevant stack testing summary reports
- ☐ Other:

25. Rationale for Requesting the Limit(s):

DEQ AIR QUALITY PROGRAM
1410 N. Hilton, Boise, ID 83706
For assistance, call the
Air Permit Hotline – 1-877-5PERMIT

Emissions Unit - General **Form EU0**
Revision 4
08/28/08

Please see instructions on page 2 before filling out the form.

IDENTIFICATION

1. Company Name:	2. Facility Name:	3. Facility ID No:
Idahoan Foods, LLC	Idaho Falls Facility	019-00038

4. Brief Project Description: Replacing Three Proctors with 2 Fluid Bed Dryers and Adding a Drum Dryer

EMISSIONS UNIT (PROCESS) IDENTIFICATION & DESCRIPTION

5.	Emissions Unit (EU) Name:	AIR MAKEUP UNIT #2 FLAKER ROOM
6.	EU ID Number:	11
7.	EU Type:	☐ New Source ☐ Unpermitted Existing Source ☒ Modification to a Permitted Source -- Previous Permit #:T2-2009.0027 Date Issued: 5/9/2008
8.	Manufacturer:	UNKNOWN
9.	Model:	N/A
10..	Maximum Capacity:	2.5 Million BTU/HR
11.	Date of Construction:	1971
12.	Date of Modification (if any):	
13.	Is this a Controlled Emission Unit?	☒ No ☐ Yes If Yes, complete the following section. If No, go to line 22.

EMISSIONS CONTROL EQUIPMENT

14. Control Equipment Name and ID:

15. Date of Installation: 16. Date of Modification (if any):

17. Manufacturer and Model Number:

18. ID(s) of Emission Unit Controlled:

19. Is operating schedule different than emission units(s) involved? ☐ Yes ☐ No

20. Does the manufacturer guarantee the control efficiency of the control equipment? ☐ Yes ☐ No (If Yes, attach and label manufacturer guarantee)

	Pollutant Controlled					
	PM	PM10	SO_2	NOx	VOC	CO
Control Efficiency						

21. If manufacturer's data is not available, attach a separate sheet of paper to provide the control equipment design specifications and performance data to support the above mentioned control efficiency.

EMISSION UNIT OPERATING SCHEDULE (hours/day, hours/year, or other)

22.	Actual Operation:	8424
23.	Maximum Operation:	8760

REQUESTED LIMITS

24. Are you requesting any permit limits? ☐ Yes ☒ No (If Yes, indicate all that apply below)

- ☐ Operation Hour Limit(s):
- ☐ Production Limit(s):
- ☐ Material Usage Limit(s):
- ☐ Limits Based on Stack Testing: Please attach all relevant stack testing summary reports
- ☐ Other:

25. Rationale for Requesting the Limit(s):

DEQ AIR QUALITY PROGRAM
1410 N. Hilton, Boise, ID 83706
For assistance, call the
Air Permit Hotline – 1-877-5PERMIT

Emissions Unit - General **Form EU0**
Revision 4
08/28/08

Please see instructions on page 2 before filling out the form.

IDENTIFICATION

1. Company Name:	2. Facility Name:	3. Facility ID No:
Idahoan Foods, LLC	Idaho Falls Facility	019-00038

4. Brief Project Description: Replacing Three Proctors with 2 Fluid Bed Dryers and Adding a Drum Dryer

EMISSIONS UNIT (PROCESS) IDENTIFICATION & DESCRIPTION

5.	Emissions Unit (EU) Name:	AIR MAKEUP UNIT #3 BAG ROOM
6.	EU ID Number:	12
7.	EU Type:	☐ New Source ☐ Unpermitted Existing Source ☒ Modification to a Permitted Source -- Previous Permit #:T2-2009.0027 Date Issued: 5/9/2008
8.	Manufacturer:	UNKNOWN
9.	Model:	N/A
10..	Maximum Capacity:	5 Million BTU/HR
11.	Date of Construction:	1971
12.	Date of Modification (if any):	
13.	Is this a Controlled Emission Unit?	☒ No ☐ Yes If Yes, complete the following section. If No, go to line 22.

EMISSIONS CONTROL EQUIPMENT

14. Control Equipment Name and ID:

15. Date of Installation: 16. Date of Modification (if any):

17. Manufacturer and Model Number:

18. ID(s) of Emission Unit Controlled:

19. Is operating schedule different than emission units(s) involved? ☐ Yes ☐ No

20. Does the manufacturer guarantee the control efficiency of the control equipment? ☐ Yes ☐ No (If Yes, attach and label manufacturer guarantee)

	Pollutant Controlled					
	PM	PM10	SO_2	NOx	VOC	CO
Control Efficiency						

21. If manufacturer's data is not available, attach a separate sheet of paper to provide the control equipment design specifications and performance data to support the above mentioned control efficiency.

EMISSION UNIT OPERATING SCHEDULE (hours/day, hours/year, or other)

22.	Actual Operation:	8424
23.	Maximum Operation:	8760

REQUESTED LIMITS

24. Are you requesting any permit limits? ☐ Yes ☒ No (If Yes, indicate all that apply below)

- ☐ Operation Hour Limit(s):
- ☐ Production Limit(s):
- ☐ Material Usage Limit(s):
- ☐ Limits Based on Stack Testing: Please attach all relevant stack testing summary reports
- ☐ Other:

25. Rationale for Requesting the Limit(s):

DEQ AIR QUALITY PROGRAM
1410 N. Hilton, Boise, ID 83706
For assistance, call the
Air Permit Hotline – 1-877-5PERMIT

Emissions Unit - General **Form EU0**
Revision 4
08/28/08

Please see instructions on page 2 before filling out the form.

IDENTIFICATION

1. Company Name:	2. Facility Name:	3. Facility ID No:
Idahoan Foods, LLC	Idaho Falls Facility	019-00038

4. Brief Project Description: Replacing Three Proctors with 2 Fluid Bed Dryers and Adding a Drum Dryer

EMISSIONS UNIT (PROCESS) IDENTIFICATION & DESCRIPTION

5.	Emissions Unit (EU) Name:	AIR MAKEUP UNIT #4 WAREHOUSE
6.	EU ID Number:	13
7.	EU Type:	☒ New Source ☐ Unpermitted Existing Source ☐ Modification to a Permitted Source -- Previous Permit #:T2-2009.0027 Date Issued: 5/9/2008
8.	Manufacturer:	RAYCO
9.	Model:	GAS PAC 500
10..	Maximum Capacity:	5.5 MILLION BTU/HR
11.	Date of Construction:	2012
12.	Date of Modification (if any):	NA
13.	Is this a Controlled Emission Unit?	☒ No ☐ Yes If Yes, complete the following section. If No, go to line 22.

EMISSIONS CONTROL EQUIPMENT

14. Control Equipment Name and ID:

15. Date of Installation: 16. Date of Modification (if any):

17. Manufacturer and Model Number:

18. ID(s) of Emission Unit Controlled:

19. Is operating schedule different than emission units(s) involved? ☐ Yes ☐ No

20. Does the manufacturer guarantee the control efficiency of the control equipment? ☐ Yes ☐ No (If Yes, attach and label manufacturer guarantee)

	Pollutant Controlled					
	PM	PM10	SO_2	NOx	VOC	CO
Control Efficiency						

21. If manufacturer's data is not available, attach a separate sheet of paper to provide the control equipment design specifications and performance data to support the above mentioned control efficiency.

EMISSION UNIT OPERATING SCHEDULE (hours/day, hours/year, or other)

22.	Actual Operation:	8424
23.	Maximum Operation:	8760

REQUESTED LIMITS

24. Are you requesting any permit limits? ☐ Yes ☒ No (If Yes, indicate all that apply below)

- ☐ Operation Hour Limit(s):
- ☐ Production Limit(s):
- ☐ Material Usage Limit(s):
- ☐ Limits Based on Stack Testing: Please attach all relevant stack testing summary reports
- ☐ Other:

25. Rationale for Requesting the Limit(s):

DEQ AIR QUALITY PROGRAM
1410 N. Hilton, Boise, ID 83706
For assistance, call the
Air Permit Hotline – 1-877-5PERMIT

Emissions Unit - General **Form EU0**
Revision 4
08/28/08

Please see instructions on page 2 before filling out the form.

IDENTIFICATION

1. Company Name:	2. Facility Name:	3. Facility ID No:
Idahoan Foods, LLC	Idaho Falls Facility	019-00038

4. Brief Project Description: Replacing Three Proctors with 2 Fluid Bed Dryers and Adding a Drum Dryer

EMISSIONS UNIT (PROCESS) IDENTIFICATION & DESCRIPTION

5.	Emissions Unit (EU) Name:	BAG HOUSE, DAY TANK "A", REAL LINE
6.	EU ID Number:	14
7.	EU Type:	☒ New Source ☐ Unpermitted Existing Source ☐ Modification to a Permitted Source -- Previous Permit #:T2-2009.0027 Date Issued: 5/9/2008
8.	Manufacturer:	KRON
9.	Model:	F15214-174M
10..	Maximum Capacity:	3.75 Ton/Hr
11.	Date of Construction:	2012
12.	Date of Modification (if any):	NA
13.	Is this a Controlled Emission Unit?	☒ No ☐ Yes If Yes, complete the following section. If No, go to line 22.

EMISSIONS CONTROL EQUIPMENT

14. Control Equipment Name and ID:

15. Date of Installation: 16. Date of Modification (if any):

17. Manufacturer and Model Number:

18. ID(s) of Emission Unit Controlled:

19. Is operating schedule different than emission units(s) involved? ☐ Yes ☐ No

20. Does the manufacturer guarantee the control efficiency of the control equipment? ☐ Yes ☐ No (If Yes, attach and label manufacturer guarantee)

	Pollutant Controlled					
	PM	PM10	SO_2	NOx	VOC	CO
Control Efficiency						

21. If manufacturer's data is not available, attach a separate sheet of paper to provide the control equipment design specifications and performance data to support the above mentioned control efficiency.

EMISSION UNIT OPERATING SCHEDULE (hours/day, hours/year, or other)

22.	Actual Operation:	8424
23.	Maximum Operation:	8760

REQUESTED LIMITS

24. Are you requesting any permit limits? ☐ Yes ☒ No (If Yes, indicate all that apply below)

- ☐ Operation Hour Limit(s):
- ☐ Production Limit(s):
- ☐ Material Usage Limit(s):
- ☐ Limits Based on Stack Testing: Please attach all relevant stack testing summary reports
- ☐ Other:

25. Rationale for Requesting the Limit(s):

DEQ AIR QUALITY PROGRAM
1410 N. Hilton, Boise, ID 83706
For assistance, call the
Air Permit Hotline – 1-877-5PERMIT

Emissions Unit - General **Form EU0**
Revision 4
08/28/08

Please see instructions on page 2 before filling out the form.

IDENTIFICATION

1. Company Name:	2. Facility Name:	3. Facility ID No:
Idahoan Foods, LLC	Idaho Falls Facility	019-00038

4. Brief Project Description: Replacing Three Proctors with 2 Fluid Bed Dryers and Adding a Drum Dryer

EMISSIONS UNIT (PROCESS) IDENTIFICATION & DESCRIPTION

5.	Emissions Unit (EU) Name:	BAG HOUSE, DAY TANK "B", REAL LINE
6.	EU ID Number:	15
7.	EU Type:	☒ New Source ☐ Unpermitted Existing Source ☐ Modification to a Permitted Source -- Previous Permit #:T2-2009.0027 Date Issued: 5/9/2008
8.	Manufacturer:	KTRON
9.	Model:	F15214-174M
10..	Maximum Capacity:	3.75 T/hr
11.	Date of Construction:	2012
12.	Date of Modification (if any):	NA
13.	Is this a Controlled Emission Unit?	☒ No ☐ Yes If Yes, complete the following section. If No, go to line 22.

EMISSIONS CONTROL EQUIPMENT

14. Control Equipment Name and ID:

15. Date of Installation: 16. Date of Modification (if any):

17. Manufacturer and Model Number:

18. ID(s) of Emission Unit Controlled:

19. Is operating schedule different than emission units(s) involved? ☐ Yes ☐ No

20. Does the manufacturer guarantee the control efficiency of the control equipment? ☐ Yes ☐ No (If Yes, attach and label manufacturer guarantee)

	Pollutant Controlled					
	PM	PM10	SO_2	NOx	VOC	CO
Control Efficiency						

21. If manufacturer's data is not available, attach a separate sheet of paper to provide the control equipment design specifications and performance data to support the above mentioned control efficiency.

EMISSION UNIT OPERATING SCHEDULE (hours/day, hours/year, or other)

22.	Actual Operation:	8424
23.	Maximum Operation:	8760

REQUESTED LIMITS

24. Are you requesting any permit limits? ☐ Yes ☒ No (If Yes, indicate all that apply below)

- ☐ Operation Hour Limit(s):
- ☐ Production Limit(s):
- ☐ Material Usage Limit(s):
- ☐ Limits Based on Stack Testing: Please attach all relevant stack testing summary reports
- ☐ Other:

25. Rationale for Requesting the Limit(s):

DEQ AIR QUALITY PROGRAM
1410 N. Hilton, Boise, ID 83706
For assistance, call the
Air Permit Hotline – 1-877-5PERMIT

Emissions Unit - General **Form EU0**
Revision 4
08/28/08

Please see instructions on page 2 before filling out the form.

IDENTIFICATION

1. Company Name:	2. Facility Name:	3. Facility ID No:
Idahoan Foods, LLC	Idaho Falls Facility	019-00038

4. Brief Project Description: Replacing Three Proctors with 2 Fluid Bed Dryers and Adding a Drum Dryer

EMISSIONS UNIT (PROCESS) IDENTIFICATION & DESCRIPTION

5.	Emissions Unit (EU) Name:	BAG HOUSE, PRODUCT TRANSFER, REAL LINE 1
6.	EU ID Number:	16
7.	EU Type:	☒ New Source ☐ Unpermitted Existing Source ☐ Modification to a Permitted Source -- Previous Permit #:T2-2009.0027 Date Issued: 5/9/2008
8.	Manufacturer:	KTRON
9.	Model:	F15214-174M
10..	Maximum Capacity:	1.88 T/Hr
11.	Date of Construction:	2012
12.	Date of Modification (if any):	NA
13.	Is this a Controlled Emission Unit?	☒ No ☐ Yes If Yes, complete the following section. If No, go to line 22.

EMISSIONS CONTROL EQUIPMENT

14. Control Equipment Name and ID:

15. Date of Installation: 16. Date of Modification (if any):

17. Manufacturer and Model Number:

18. ID(s) of Emission Unit Controlled:

19. Is operating schedule different than emission units(s) involved? ☐ Yes ☐ No

20. Does the manufacturer guarantee the control efficiency of the control equipment? ☐ Yes ☐ No (If Yes, attach and label manufacturer guarantee)

	Pollutant Controlled					
	PM	PM10	SO_2	NOx	VOC	CO
Control Efficiency						

21. If manufacturer's data is not available, attach a separate sheet of paper to provide the control equipment design specifications and performance data to support the above mentioned control efficiency.

EMISSION UNIT OPERATING SCHEDULE (hours/day, hours/year, or other)

22.	Actual Operation:	8424
23.	Maximum Operation:	8760

REQUESTED LIMITS

24. Are you requesting any permit limits? ☐ Yes ☒ No (If Yes, indicate all that apply below)

- ☐ Operation Hour Limit(s):
- ☐ Production Limit(s):
- ☐ Material Usage Limit(s):
- ☐ Limits Based on Stack Testing: Please attach all relevant stack testing summary reports
- ☐ Other:

25. Rationale for Requesting the Limit(s):

DEQ AIR QUALITY PROGRAM
1410 N. Hilton, Boise, ID 83706
For assistance, call the
Air Permit Hotline – 1-877-5PERMIT

Emissions Unit - General **Form EU0**
Revision 4
08/28/08

Please see instructions on page 2 before filling out the form.

IDENTIFICATION

1. Company Name:	2. Facility Name:	3. Facility ID No:
Idahoan Foods, LLC	Idaho Falls Facility	019-00038

4. Brief Project Description: Replacing Three Proctors with 2 Fluid Bed Dryers and Adding a Drum Dryer

EMISSIONS UNIT (PROCESS) IDENTIFICATION & DESCRIPTION

5.	Emissions Unit (EU) Name:	BAG HOUSE, PRODUCT TRANSFER, REAL LINE 2
6.	EU ID Number:	17
7.	EU Type:	☒ New Source ☐ Unpermitted Existing Source ☐ Modification to a Permitted Source -- Previous Permit #:T2-2009.0027 Date Issued: 5/9/2008
8.	Manufacturer:	KTRON
9.	Model:	F15214-174M
10..	Maximum Capacity:	1.88 T/Hr
11.	Date of Construction:	2012
12.	Date of Modification (if any):	NA
13.	Is this a Controlled Emission Unit?	☒ No ☐ Yes If Yes, complete the following section. If No, go to line 22.

EMISSIONS CONTROL EQUIPMENT

14. Control Equipment Name and ID:

15. Date of Installation: 16. Date of Modification (if any):

17. Manufacturer and Model Number:

18. ID(s) of Emission Unit Controlled:

19. Is operating schedule different than emission units(s) involved? ☐ Yes ☐ No

20. Does the manufacturer guarantee the control efficiency of the control equipment? ☐ Yes ☐ No (If Yes, attach and label manufacturer guarantee)

	Pollutant Controlled					
	PM	PM10	SO_2	NOx	VOC	CO
Control Efficiency						

21. If manufacturer's data is not available, attach a separate sheet of paper to provide the control equipment design specifications and performance data to support the above mentioned control efficiency.

EMISSION UNIT OPERATING SCHEDULE (hours/day, hours/year, or other)

22.	Actual Operation:	8424
23.	Maximum Operation:	8760

REQUESTED LIMITS

24. Are you requesting any permit limits? ☐ Yes ☒ No (If Yes, indicate all that apply below)

- ☐ Operation Hour Limit(s):
- ☐ Production Limit(s):
- ☐ Material Usage Limit(s):
- ☐ Limits Based on Stack Testing: Please attach all relevant stack testing summary reports
- ☐ Other:

25. Rationale for Requesting the Limit(s):

DEQ AIR QUALITY PROGRAM
1410 N. Hilton, Boise, ID 83706
For assistance, call the
Air Permit Hotline – 1-877-5PERMIT

Emissions Unit - General **Form EU0**
Revision 4
08/28/08

Please see instructions on page 2 before filling out the form.

IDENTIFICATION

1. Company Name:	2. Facility Name:	3. Facility ID No:
Idahoan Foods, LLC	Idaho Falls Facility	019-00038

4. Brief Project Description: Replacing Three Proctors with 2 Fluid Bed Dryers and Adding a Drum Dryer

EMISSIONS UNIT (PROCESS) IDENTIFICATION & DESCRIPTION

5.	Emissions Unit (EU) Name:	BAG HOUSE, FINISHED PRODUCT , REAL LINE 1
6.	EU ID Number:	18
7.	EU Type:	☒ New Source ☐ Unpermitted Existing Source ☐ Modification to a Permitted Source -- Previous Permit #:T2-2009.0027 Date Issued: 5/9/2008
8.	Manufacturer:	KTRON
9.	Model:	PF15214-186M.1
10..	Maximum Capacity:	1.88 T/Hr
11.	Date of Construction:	2012
12.	Date of Modification (if any):	NA
13.	Is this a Controlled Emission Unit?	☒ No ☐ Yes If Yes, complete the following section. If No, go to line 22.

EMISSIONS CONTROL EQUIPMENT

14. Control Equipment Name and ID:

15. Date of Installation: 16. Date of Modification (if any):

17. Manufacturer and Model Number:

18. ID(s) of Emission Unit Controlled:

19. Is operating schedule different than emission units(s) involved? ☐ Yes ☐ No

20. Does the manufacturer guarantee the control efficiency of the control equipment? ☐ Yes ☐ No (If Yes, attach and label manufacturer guarantee)

	Pollutant Controlled					
	PM	PM10	SO_2	NOx	VOC	CO
Control Efficiency						

21. If manufacturer's data is not available, attach a separate sheet of paper to provide the control equipment design specifications and performance data to support the above mentioned control efficiency.

EMISSION UNIT OPERATING SCHEDULE (hours/day, hours/year, or other)

22.	Actual Operation:	8424
23.	Maximum Operation:	8760

REQUESTED LIMITS

24. Are you requesting any permit limits? ☐ Yes ☒ No (If Yes, indicate all that apply below)

- ☐ Operation Hour Limit(s):
- ☐ Production Limit(s):
- ☐ Material Usage Limit(s):
- ☐ Limits Based on Stack Testing: Please attach all relevant stack testing summary reports
- ☐ Other:

25. Rationale for Requesting the Limit(s):

DEQ AIR QUALITY PROGRAM
1410 N. Hilton, Boise, ID 83706
For assistance, call the
Air Permit Hotline – 1-877-5PERMIT

Emissions Unit - General **Form EU0**
Revision 4
08/28/08

Please see instructions on page 2 before filling out the form.

IDENTIFICATION

1. Company Name:	2. Facility Name:	3. Facility ID No:
Idahoan Foods, LLC	Idaho Falls Facility	019-00038

4. Brief Project Description: Replacing Three Proctors with 2 Fluid Bed Dryers and Adding a Drum Dryer

EMISSIONS UNIT (PROCESS) IDENTIFICATION & DESCRIPTION

5.	Emissions Unit (EU) Name:	BAG HOUSE, FINISHED PRODUCT , REAL LINE 2
6.	EU ID Number:	19
7.	EU Type:	☒ New Source ☐ Unpermitted Existing Source ☐ Modification to a Permitted Source -- Previous Permit #:T2-2009.0027 Date Issued: 5/9/2008
8.	Manufacturer:	KTRON
9.	Model:	PF15214-186M.1
10..	Maximum Capacity:	1.88 T/Hr
11.	Date of Construction:	2012
12.	Date of Modification (if any):	NA
13.	Is this a Controlled Emission Unit?	☒ No ☐ Yes If Yes, complete the following section. If No, go to line 22.

EMISSIONS CONTROL EQUIPMENT

14. Control Equipment Name and ID:

15. Date of Installation: 16. Date of Modification (if any):

17. Manufacturer and Model Number:

18. ID(s) of Emission Unit Controlled:

19. Is operating schedule different than emission units(s) involved? ☐ Yes ☐ No

20. Does the manufacturer guarantee the control efficiency of the control equipment? ☐ Yes ☐ No (If Yes, attach and label manufacturer guarantee)

	Pollutant Controlled					
	PM	PM10	SO_2	NOx	VOC	CO
Control Efficiency						

21. If manufacturer's data is not available, attach a separate sheet of paper to provide the control equipment design specifications and performance data to support the above mentioned control efficiency.

EMISSION UNIT OPERATING SCHEDULE (hours/day, hours/year, or other)

22.	Actual Operation:	8424
23.	Maximum Operation:	8760

REQUESTED LIMITS

24. Are you requesting any permit limits? ☐ Yes ☒ No (If Yes, indicate all that apply below)

- ☐ Operation Hour Limit(s):
- ☐ Production Limit(s):
- ☐ Material Usage Limit(s):
- ☐ Limits Based on Stack Testing: Please attach all relevant stack testing summary reports
- ☐ Other:

25. Rationale for Requesting the Limit(s):

DEQ AIR QUALITY PROGRAM
1410 N. Hilton, Boise, ID 83706
For assistance, call the
Air Permit Hotline – 1-877-5PERMIT

Emissions Unit - General **Form EU0**
Revision 4
08/28/08

Please see instructions on page 2 before filling out the form.

IDENTIFICATION

1. Company Name:	2. Facility Name:	3. Facility ID No:
Idahoan Foods, LLC	Idaho Falls Facility	019-00038

4. Brief Project Description: Replacing Three Proctors with 2 Fluid Bed Dryers and Adding a Drum Dryer

EMISSIONS UNIT (PROCESS) IDENTIFICATION & DESCRIPTION

5.	Emissions Unit (EU) Name:	BAG HOUSE, PRODUCT TRANSFER RAW , CREAMY MASH
6.	EU ID Number:	20
7.	EU Type:	☒ New Source ☐ Unpermitted Existing Source ☐ Modification to a Permitted Source -- Previous Permit #:T2-2009.0027 Date Issued: 5/9/2008
8.	Manufacturer:	Joyeno
9.	Model:	Unknown
10..	Maximum Capacity:	.75 T/HR
11.	Date of Construction:	1985
12.	Date of Modification (if any):	2012
13.	Is this a Controlled Emission Unit?	☒ No ☐ Yes If Yes, complete the following section. If No, go to line 22.

EMISSIONS CONTROL EQUIPMENT

14. Control Equipment Name and ID:

15. Date of Installation: 16. Date of Modification (if any):

17. Manufacturer and Model Number:

18. ID(s) of Emission Unit Controlled:

19. Is operating schedule different than emission units(s) involved? ☐ Yes ☐ No

20. Does the manufacturer guarantee the control efficiency of the control equipment? ☐ Yes ☐ No (If Yes, attach and label manufacturer guarantee)

	Pollutant Controlled					
	PM	PM10	SO_2	NOx	VOC	CO
Control Efficiency						

21. If manufacturer's data is not available, attach a separate sheet of paper to provide the control equipment design specifications and performance data to support the above mentioned control efficiency.

EMISSION UNIT OPERATING SCHEDULE (hours/day, hours/year, or other)

22.	Actual Operation:	8424
23.	Maximum Operation:	8760

REQUESTED LIMITS

24. Are you requesting any permit limits? ☐ Yes ☒ No (If Yes, indicate all that apply below)

- ☐ Operation Hour Limit(s):
- ☐ Production Limit(s):
- ☐ Material Usage Limit(s):
- ☐ Limits Based on Stack Testing: Please attach all relevant stack testing summary reports
- ☐ Other:

25. Rationale for Requesting the Limit(s):

DEQ AIR QUALITY PROGRAM
1410 N. Hilton, Boise, ID 83706
For assistance, call the
Air Permit Hotline – 1-877-5PERMIT

Emissions Unit - General **Form EU0**
Revision 4
08/28/08

Please see instructions on page 2 before filling out the form.

IDENTIFICATION

1. Company Name:	2. Facility Name:	3. Facility ID No:
Idahoan Foods, LLC	Idaho Falls Facility	019-00038

4. Brief Project Description: Replacing Three Proctors with 2 Fluid Bed Dryers and Adding a Drum Dryer

EMISSIONS UNIT (PROCESS) IDENTIFICATION & DESCRIPTION

5.	Emissions Unit (EU) Name:	BAG HOUSE, FINISHED PRODUCT TRANSFER , CREAMY MASH
6.	EU ID Number:	21
7.	EU Type:	☒ New Source ☐ Unpermitted Existing Source ☐ Modification to a Permitted Source -- Previous Permit #:T2-2009.0027 Date Issued: 5/9/2008
8.	Manufacturer:	KTRON
9.	Model:	PF15214-186M.1
10..	Maximum Capacity:	.75 T/Hr
11.	Date of Construction:	2012
12.	Date of Modification (if any):	NA
13.	Is this a Controlled Emission Unit?	☒ No ☐ Yes If Yes, complete the following section. If No, go to line 22.

EMISSIONS CONTROL EQUIPMENT

14. Control Equipment Name and ID:

15. Date of Installation: 16. Date of Modification (if any):

17. Manufacturer and Model Number:

18. ID(s) of Emission Unit Controlled:

19. Is operating schedule different than emission units(s) involved? ☐ Yes ☐ No

20. Does the manufacturer guarantee the control efficiency of the control equipment? ☐ Yes ☐ No (If Yes, attach and label manufacturer guarantee)

	Pollutant Controlled					
	PM	PM10	SO_2	NOx	VOC	CO
Control Efficiency						

21. If manufacturer's data is not available, attach a separate sheet of paper to provide the control equipment design specifications and performance data to support the above mentioned control efficiency.

EMISSION UNIT OPERATING SCHEDULE (hours/day, hours/year, or other)

22.	Actual Operation:	8424
23.	Maximum Operation:	8760

REQUESTED LIMITS

24. Are you requesting any permit limits? ☐ Yes ☒ No (If Yes, indicate all that apply below)

- ☐ Operation Hour Limit(s):
- ☐ Production Limit(s):
- ☐ Material Usage Limit(s):
- ☐ Limits Based on Stack Testing: Please attach all relevant stack testing summary reports
- ☐ Other:

25. Rationale for Requesting the Limit(s):

DEQ AIR QUALITY PROGRAM
1410 N. Hilton, Boise, ID 83706
For assistance, call the
Air Permit Hotline – 1-877-5PERMIT

Emissions Unit - General **Form EU0**
Revision 4
08/28/08

Please see instructions on page 2 before filling out the form.

IDENTIFICATION

1. Company Name:	2. Facility Name:	3. Facility ID No:
Idahoan Foods, LLC	Idaho Falls Facility	019-00038

4. Brief Project Description: Replacing Three Proctors with 2 Fluid Bed Dryers and Adding a Drum Dryer

EMISSIONS UNIT (PROCESS) IDENTIFICATION & DESCRIPTION

5.	Emissions Unit (EU) Name:	BAG HOUSE, EXHAUST, DUST COLLECTOR SYSTEM
6.	EU ID Number:	22
7.	EU Type:	☒ New Source ☐ Unpermitted Existing Source ☐ Modification to a Permitted Source -- Previous Permit #:T2-2009.0027 Date Issued: 5/9/2008
8.	Manufacturer:	UNKNOWN
9.	Model:	UNKNOWN
10..	Maximum Capacity:	.0005 T/HR
11.	Date of Construction:	1985
12.	Date of Modification (if any):	2012
13.	Is this a Controlled Emission Unit?	☒ No ☐ Yes If Yes, complete the following section. If No, go to line 22.

EMISSIONS CONTROL EQUIPMENT

14. Control Equipment Name and ID:

15. Date of Installation: 16. Date of Modification (if any):

17. Manufacturer and Model Number:

18. ID(s) of Emission Unit Controlled:

19. Is operating schedule different than emission units(s) involved? ☐ Yes ☐ No

20. Does the manufacturer guarantee the control efficiency of the control equipment? ☐ Yes ☐ No (If Yes, attach and label manufacturer guarantee)

	Pollutant Controlled					
	PM	PM10	SO_2	NOx	VOC	CO
Control Efficiency						

21. If manufacturer's data is not available, attach a separate sheet of paper to provide the control equipment design specifications and performance data to support the above mentioned control efficiency.

EMISSION UNIT OPERATING SCHEDULE (hours/day, hours/year, or other)

22.	Actual Operation:	8424
23.	Maximum Operation:	8760

REQUESTED LIMITS

24. Are you requesting any permit limits? ☐ Yes ☒ No (If Yes, indicate all that apply below)

- ☐ Operation Hour Limit(s):
- ☐ Production Limit(s):
- ☐ Material Usage Limit(s):
- ☐ Limits Based on Stack Testing: Please attach all relevant stack testing summary reports
- ☐ Other:

25. Rationale for Requesting the Limit(s):

DEQ AIR QUALITY PROGRAM
1410 N. Hilton, Boise, ID 83706
For assistance, call the
Air Permit Hotline – 1-877-5PERMIT

Emissions Unit - General **Form EU0**
Revision 4
08/28/08

Please see instructions on page 2 before filling out the form.

IDENTIFICATION

1. Company Name:	2. Facility Name:	3. Facility ID No:
Idahoan Foods, LLC	Idaho Falls Facility	019-00038

4. Brief Project Description: Replacing Three Proctors with 2 Fluid Bed Dryers and Adding a Drum Dryer

EMISSIONS UNIT (PROCESS) IDENTIFICATION & DESCRIPTION

5.	Emissions Unit (EU) Name:	CYCLONE, BURNER/EXHAUST, FLUID BED DRYER, REAL #1
6.	EU ID Number:	23
7.	EU Type:	☒ New Source ☐ Unpermitted Existing Source ☐ Modification to a Permitted Source -- Previous Permit #:T2-2009.0027 Date Issued: 5/9/2008
8.	Manufacturer:	ECLIPSE (BURNER) / IDAHO STEEL (CYCLONE)
9.	Model:	TAG1000 / HCYCLONE
10..	Maximum Capacity:	10 MBTU/HR / 1.88 T/HR
11.	Date of Construction:	2012
12.	Date of Modification (if any):	NA
13.	Is this a Controlled Emission Unit?	☒ No ☐ Yes If Yes, complete the following section. If No, go to line 22.

EMISSIONS CONTROL EQUIPMENT

14. Control Equipment Name and ID:

15. Date of Installation: 16. Date of Modification (if any):

17. Manufacturer and Model Number:

18. ID(s) of Emission Unit Controlled:

19. Is operating schedule different than emission units(s) involved? ☐ Yes ☐ No

20. Does the manufacturer guarantee the control efficiency of the control equipment? ☐ Yes ☐ No (If Yes, attach and label manufacturer guarantee)

	Pollutant Controlled					
	PM	PM10	SO_2	NOx	VOC	CO
Control Efficiency						

21. If manufacturer's data is not available, attach a separate sheet of paper to provide the control equipment design specifications and performance data to support the above mentioned control efficiency.

EMISSION UNIT OPERATING SCHEDULE (hours/day, hours/year, or other)

22.	Actual Operation:	8424
23.	Maximum Operation:	8760

REQUESTED LIMITS

24. Are you requesting any permit limits? ☐ Yes ☒ No (If Yes, indicate all that apply below)

- ☐ Operation Hour Limit(s):
- ☐ Production Limit(s):
- ☐ Material Usage Limit(s):
- ☐ Limits Based on Stack Testing: Please attach all relevant stack testing summary reports
- ☐ Other:

25. Rationale for Requesting the Limit(s):

DEQ AIR QUALITY PROGRAM
1410 N. Hilton, Boise, ID 83706
For assistance, call the
Air Permit Hotline – 1-877-5PERMIT

Emissions Unit - General **Form EU0**
Revision 4
08/28/08

Please see instructions on page 2 before filling out the form.

IDENTIFICATION

1. Company Name:	2. Facility Name:	3. Facility ID No:
Idahoan Foods, LLC	Idaho Falls Facility	019-00038

4. Brief Project Description: Replacing Three Proctors with 2 Fluid Bed Dryers and Adding a Drum Dryer

EMISSIONS UNIT (PROCESS) IDENTIFICATION & DESCRIPTION

5.	Emissions Unit (EU) Name:	CYCLONE, BURNER/EXHAUST, FLUID BED DRYER, REAL #2
6.	EU ID Number:	24
7.	EU Type:	☒ New Source ☐ Unpermitted Existing Source ☐ Modification to a Permitted Source -- Previous Permit #:T2-2009.0027 Date Issued: 5/9/2008
8.	Manufacturer:	ECLIPS (BURNER) / IDAHO STEEL (CYCLONE)
9.	Model:	TAG 1000 / HCYCLONE
10..	Maximum Capacity:	10 MBTU/Hr / 1.88 T/Hr
11.	Date of Construction:	2012
12.	Date of Modification (if any):	NA
13.	Is this a Controlled Emission Unit?	☒ No ☐ Yes If Yes, complete the following section. If No, go to line 22.

EMISSIONS CONTROL EQUIPMENT

14. Control Equipment Name and ID:

15. Date of Installation: 16. Date of Modification (if any):

17. Manufacturer and Model Number:

18. ID(s) of Emission Unit Controlled:

19. Is operating schedule different than emission units(s) involved? ☐ Yes ☐ No

20. Does the manufacturer guarantee the control efficiency of the control equipment? ☐ Yes ☐ No (If Yes, attach and label manufacturer guarantee)

	Pollutant Controlled					
	PM	PM10	SO_2	NOx	VOC	CO
Control Efficiency						

21. If manufacturer's data is not available, attach a separate sheet of paper to provide the control equipment design specifications and performance data to support the above mentioned control efficiency.

EMISSION UNIT OPERATING SCHEDULE (hours/day, hours/year, or other)

22.	Actual Operation:	8424
23.	Maximum Operation:	8760

REQUESTED LIMITS

24. Are you requesting any permit limits? ☐ Yes ☒ No (If Yes, indicate all that apply below)

- ☐ Operation Hour Limit(s):
- ☐ Production Limit(s):
- ☐ Material Usage Limit(s):
- ☐ Limits Based on Stack Testing: Please attach all relevant stack testing summary reports
- ☐ Other:

25. Rationale for Requesting the Limit(s):

DEQ AIR QUALITY PROGRAM
1410 N. Hilton, Boise, ID 83706
For assistance, call the
Air Permit Hotline – 1-877-5PERMIT

Emissions Unit - General **Form EU0**
Revision 4
08/28/08

Please see instructions on page 2 before filling out the form.

IDENTIFICATION

1. Company Name:	2. Facility Name:	3. Facility ID No:
Idahoan Foods, LLC	Idaho Falls Facility	019-00038

4. Brief Project Description: Replacing Three Proctors with 2 Fluid Bed Dryers and Adding a Drum Dryer

EMISSIONS UNIT (PROCESS) IDENTIFICATION & DESCRIPTION

5.	Emissions Unit (EU) Name:	CYCLONE, EXHAUST, CREAMY MASH
6.	EU ID Number:	25
7.	EU Type:	☒ New Source ☐ Unpermitted Existing Source ☐ Modification to a Permitted Source -- Previous Permit #:T2-2009.0027 Date Issued: 5/9/2008
8.	Manufacturer:	WELLIVER
9.	Model:	6082D1
10..	Maximum Capacity:	.75 T/HR
11.	Date of Construction:	1985
12.	Date of Modification (if any):	2012
13.	Is this a Controlled Emission Unit?	☒ No ☐ Yes If Yes, complete the following section. If No, go to line 22.

EMISSIONS CONTROL EQUIPMENT

14. Control Equipment Name and ID:

15. Date of Installation: 16. Date of Modification (if any):

17. Manufacturer and Model Number:

18. ID(s) of Emission Unit Controlled:

19. Is operating schedule different than emission units(s) involved? ☐ Yes ☐ No

20. Does the manufacturer guarantee the control efficiency of the control equipment? ☐ Yes ☐ No (If Yes, attach and label manufacturer guarantee)

	Pollutant Controlled					
	PM	PM10	SO_2	NOx	VOC	CO
Control Efficiency						

21. If manufacturer's data is not available, attach a separate sheet of paper to provide the control equipment design specifications and performance data to support the above mentioned control efficiency.

EMISSION UNIT OPERATING SCHEDULE (hours/day, hours/year, or other)

22.	Actual Operation:	8424
23.	Maximum Operation:	8760

REQUESTED LIMITS

24. Are you requesting any permit limits? ☐ Yes ☒ No (If Yes, indicate all that apply below)

- ☐ Operation Hour Limit(s):
- ☐ Production Limit(s):
- ☐ Material Usage Limit(s):
- ☐ Limits Based on Stack Testing: Please attach all relevant stack testing summary reports
- ☐ Other:

25. Rationale for Requesting the Limit(s):

DEQ AIR QUALITY PROGRAM
1410 N. Hilton, Boise, ID 83706
For assistance, call the
Air Permit Hotline – 1-877-5PERMIT

Emissions Unit - General **Form EU0**
Revision 4
08/28/08

Please see instructions on page 2 before filling out the form.

IDENTIFICATION

1. Company Name:	2. Facility Name:	3. Facility ID No:
Idahoan Foods, LLC	Idaho Falls Facility	019-00038

4. Brief Project Description: Replacing Three Proctors with 2 Fluid Bed Dryers and Adding a Drum Dryer

EMISSIONS UNIT (PROCESS) IDENTIFICATION & DESCRIPTION

5.	Emissions Unit (EU) Name:	BAG HOUSE, Flake Tank Rejects
6.	EU ID Number:	26
7.	EU Type:	☒ New Source ☐ Unpermitted Existing Source ☐ Modification to a Permitted Source -- Previous Permit #:T2-2009.0027 Date Issued: 5/9/2008
8.	Manufacturer:	KTRON
9.	Model:	F15214-174M
10..	Maximum Capacity:	3.75 T/hr
11.	Date of Construction:	2012
12.	Date of Modification (if any):	NA
13.	Is this a Controlled Emission Unit?	☒ No ☐ Yes If Yes, complete the following section. If No, go to line 22.

EMISSIONS CONTROL EQUIPMENT

14. Control Equipment Name and ID:

15. Date of Installation: 16. Date of Modification (if any):

17. Manufacturer and Model Number:

18. ID(s) of Emission Unit Controlled:

19. Is operating schedule different than emission units(s) involved? ☐ Yes ☐ No

20. Does the manufacturer guarantee the control efficiency of the control equipment? ☐ Yes ☐ No (If Yes, attach and label manufacturer guarantee)

	Pollutant Controlled					
	PM	PM10	SO_2	NOx	VOC	CO
Control Efficiency						

21. If manufacturer's data is not available, attach a separate sheet of paper to provide the control equipment design specifications and performance data to support the above mentioned control efficiency.

EMISSION UNIT OPERATING SCHEDULE (hours/day, hours/year, or other)

22.	Actual Operation:	8424
23.	Maximum Operation:	8760

REQUESTED LIMITS

24. Are you requesting any permit limits? ☐ Yes ☒ No (If Yes, indicate all that apply below)

- ☐ Operation Hour Limit(s):
- ☐ Production Limit(s):
- ☐ Material Usage Limit(s):
- ☐ Limits Based on Stack Testing: Please attach all relevant stack testing summary reports
- ☐ Other:

25. Rationale for Requesting the Limit(s):

Idahoan Foods, LLC Idaho Falls Facility P-2012.0020 PROJ 61031

Source ID No.	Sources	Control Equipment	Emission Point ID No.
1	Emissions Unit Name: Manufacturer: CLEVER BROOKS Model: WT200X-CN5 Burner Model: Axially Fired Manufacture Date: 1974 Heat input rating: 61.6 MMBtu/hr Max. production: NA T/hr Fuel: Natural Gas Fuel consumption: 59,553 scf/hr		Exit height: 26 ft Exit diameter: 3.42 ft Exit flow rate: 15,295 acfm Exit temperature: 390 °F

Idahoan Foods, LLC Idaho Falls Facility P-2012.0020 PROJ 61031

Source ID No.	Sources	Control Equipment	Emission Point ID No.
2	Emissions Unit Name: Manufacturer: CLEVER BROOKS Model: L34 Burner Model: Axially Fired Manufacture Date: 1968 Heat input rating: 26.7 MMBtu/hr Max. production: NA T/hr Fuel: Natural Gas Fuel consumption: 25,783 scf/hr		Exit height: 26 ft Exit diameter: 3.42 ft Exit flow rate: 9,193 acfm Exit temperature: 360 °F

Idahoan Foods, LLC Idaho Falls Facility P-2012.0020 PROJ 61031

Source ID No.	Sources	Control Equipment	Emission Point ID No.
3	Emissions Unit Name: Dryer Flaker/Drum Type #1 Manufacturer: Blaw Knox Model: 105 Burner Model: NA Manufacture Date: 1974 Heat input rating: NA MMBtu/hr Max. production: 2.5 T/hr, for all 4 Flakers combined. Fuel: NA Fuel consumption: NA gal/hr	Control Device Name: **NA**	Exit height: 30 ft Exit diameter: .8 ft Exit flow rate: 10,000 acfm Exit temperature: 110 °F

Idahoan Foods, LLC Idaho Falls Facility P-2012.0020 PROJ 61031

Source ID No.	Sources	Control Equipment	Emission Point ID No.
4	Emissions Unit Name: Dryer Flaker/Drum Type #2 Manufacturer: Blaw Knox Model: 105 Burner Model: NA Manufacture Date: 1974 Heat input rating: NA MMBtu/hr Max. production: 2.5 T/hr for all 4 flakers combined. Fuel: NA Fuel consumption: NA gal/hr	Control Device Name: NA	Exit height: 30 ft Exit diameter: .8 ft Exit flow rate: 10,000 acfm Exit temperature: 110 °F

Idahoan Foods, LLC Idaho Falls Facility P-2012.0020 PROJ 61031

Source ID No.	Sources	Control Equipment	Emission Point ID No.
5	Emissions Unit Name: Dryer Flaker/Drum Type #3 Manufacturer: Idaho Steel Model: 6X20-5 Roll Drum Burner Model: NA Manufacture Date: 2004 Heat input rating: NA MMBtu/hr Max. production: 2.5 T/hr for all 4 flakers combined. Fuel: NA Fuel consumption: NA gal/hr	Control Device Name: NA	Exit height: 30 ft Exit diameter: .8 ft Exit flow rate: 20,000 acfm Exit temperature: 110 °F

Idahoan Foods, LLC Idaho Falls Facility P-2012.0020 PROJ 61031

Source ID No.	Sources	Control Equipment	Emission Point ID No.
6	Emissions Unit Name: Dryer Flaker Drum Type #4 Manufacturer: Idaho Steel Model: 6X20 5 Roll Drum Burner Model: NA Manufacture Date: 1985 Heat input rating: NA MMBtu/hr Max. production: 2.5 T/hr for all 4 Flakers combined. Fuel: NA Fuel consumption: NA gal/hr	Control Device Name: NA	Exit height: 30 ft Exit diameter: .8 ft Exit flow rate: 20,000 acfm Exit temperature: 110 °F

Idahoan Foods, LLC Idaho Falls Facility P-2012.0020 PROJ 61031

Source ID No.	Sources	Control Equipment	Emission Point ID No.
7	Emissions Unit Name: Flaker lines 1 & 2 Vaculift Manufacturer: Vaculift Model: Burner Model: NA Manufacture Date: 1981 Heat input rating: NA MMBtu/hr Max. production: .86 T/hr Fuel: NA Fuel consumption: NA gal/hr	Control Device Name: Manufacturer: Vaculift Model: None Type: Cyclone Number of bags: NA Air to Cloth ratio: NA PM_{10} control efficiency: 95%	Exit height: 30 ft Exit diameter: .8 ft Exit flow rate: 1140 acfm Exit temperature: 110 °F

Idahoan Foods, LLC Idaho Falls Facility P-2012.0020 PROJ 61031

Source ID No.	Sources	Control Equipment	Emission Point ID No.
8	Emissions Unit Name: Flaker line 3 Vaculift Manufacturer: Vaculift Model: NA Burner Model: NA Manufacture Date: 1995 Heat input rating: NA MMBtu/hr Max. production: .82 T/hr Fuel: NA Fuel consumption: NA gal/hr	Control Device Name: Manufacturer: Vaculift Model: None Type: Cyclone Number of bags: NA Air to Cloth ratio: NA to 1 PM_{10} control efficiency: 95%	Exit height: 30 ft Exit diameter: .8 ft Exit flow rate: 990 acfm Exit temperature: 110 °F

Idahoan Foods, LLC Idaho Falls Facility P-2012.0020 PROJ 61031

Source ID No.	Sources	Control Equipment	Emission Point ID No.
9	Emissions Unit Name: Flaker line 4 Vaculift & Bag House Manufacturer: Unknown Model: NA Burner Model: NA Manufacture Date: 2012 Heat input rating: NA MMBtu/hr Max. production: .75 T/hr Fuel: NA Fuel consumption: NA gal/hr	Control Device Name: Vaculift & Bag House Manufacturer:Vaculift/SMME Model: Unknown Type: Cyclone/Bag House Number of bags: 25 Air to Cloth ratio: 10 to 1 PM_{10} control efficiency: 99.97%	Exit height: 30 ft Exit diameter: .8 ft Exit flow rate: 1050 acfm Exit temperature: 110 °F

Idahoan Foods, LLC Idaho Falls Facility P-2012.0020 PROJ 61031

Source ID No.	Sources	Control Equipment	Emission Point ID No.
10	Emissions Unit Name: Air Makeup Unit #1 Waste Plant Manufacturer: Idahoan Model: NA Burner Model: Unknown Manufacture Date: 1971 Heat input rating: 2.5 MMBtu/hr Max. production: NA T/hr Fuel: Natural Gas Fuel consumption: 2,418 scf/hr		

Idahoan Foods, LLC Idaho Falls Facility P-2012.0020 PROJ 61031

Source ID No.	Sources	Control Equipment	Emission Point ID No.
11	Emissions Unit Name: Air Makeup Unit #2 Flake room Manufacturer: King Model: 6225 MNHRB Burner Model: NA Manufacture Date: 1971 Heat input rating: 2.5 MMBtu/hr Max. production: NA T/hr Fuel: Natural Gas Fuel consumption: 2,418 scf/hr		

Idahoan Foods, LLC Idaho Falls Facility P-2012.0020 PROJ 61031

Source ID No.	Sources	Control Equipment	Emission Point ID No.
12	Emissions Unit Name: Air Makeup Unit #3 Bag Room Manufacturer: hartzell Model: 81-60-P3 Burner Model: NA Manufacture Date: 1971 Heat input rating: 5 MMBtu/hr Max. production: NA T/hr Fuel: Natural Gas Fuel consumption: 4,836 scf/hr		

Idahoan Foods, LLC Idaho Falls Facility P-2012.0020 PROJ 61031

Source ID No.	Sources	Control Equipment	Emission Point ID No.
13	Emissions Unit Name: Air Makeup Unit #4 Warehouse Manufacturer: REYCO Model: Gas Pac 500 Burner Model: Gas Pac 500 Manufacture Date: 2012 Heat input rating: 5.5 MMBtu/hr Max. production: NA T/hr Fuel: Natural Gas Fuel consumption: 7,250 scf/hr		

Idahoan Foods, LLC Idaho Falls Facility P-2012.0020 PROJ 61031

Source ID No.	Sources	Control Equipment	Emission Point ID No.
14	Emissions Unit Name: BAG HOUSE, DAY TANK "A", REAL LINE Manufacturer: Ktron Model: F15214-174M Burner Model: NA Manufacture Date: 2012 Heat input rating: NA MMBtu/hr Max. production: 3.75 T/hr Fuel: NA Fuel consumption: NA gal/hr	Control Device Name: BAG HOUSE, DAY TANK "A", REAL LINE Manufacturer: Ktron Model: F15214-174M Type: Bag House Number of bags: 24 Air to Cloth ratio: 5.4 to 1 PM_{10} control efficiency: 99.97%	Exit height: 30 ft Exit diameter: .5 ft Exit flow rate: 1050 acfm Exit temperature: 85 °F

Idahoan Foods, LLC Idaho Falls Facility P-2012.0020 PROJ 61031

Source ID No.	Sources	Control Equipment	Emission Point ID No.
15	Emissions Unit Name: Bag House Day Tank B Real line Manufacturer: Ktron Model: F15214-174M Burner Model: NA Manufacture Date: 2012 Heat input rating: NA MMBtu/hr Max. production: 3.75 T/hr Fuel: NA Fuel consumption: NA gal/hr	Control Device Name: Manufacturer: Ktron Model: F15214-174M Type: Bag House Number of bags: 24 Air to Cloth ratio: 5.4 to 1 PM_{10} control efficiency: 99.97%	Exit height: 30 ft Exit diameter: .5 ft Exit flow rate: 1050 acfm Exit temperature: 85 °F

Idahoan Foods, LLC Idaho Falls Facility P-2012.0020 PROJ 61031

Source ID No.	Sources	Control Equipment	Emission Point ID No.
16	Emissions Unit Name: Bag House Product Transfer Real Line #1 Manufacturer: Ktron Model: F15214-174M Burner Model: NA Manufacture Date: 2012 Heat input rating: NA MMBtu/hr Max. production: 1.88 T/hr Fuel: NA Fuel consumption: NA gal/hr	Control Device Name: Manufacturer: Ktron Model: F15214-174M Type: Bag House Number of bags: 24 Air to Cloth ratio: 5.4 to 1 PM_{10} control efficiency: 99.97%	Exit height: 30 ft Exit diameter: .5 ft Exit flow rate: 1050 acfm Exit temperature: 85 °F

Idahoan Foods, LLC Idaho Falls Facility P-2012.0020 PROJ 61031

Source ID No.	Sources	Control Equipment	Emission Point ID No.
17	Emissions Unit Name: Bag House Product Transfer Real Line #2 Manufacturer: Ktron Model: F15214-174M Burner Model: NA Manufacture Date: 2012 Heat input rating: NA MMBtu/hr Max. production: 1.88 T/hr Fuel: NA Fuel consumption: NA gal/hr	Control Device Name: Manufacturer: Ktron Model: F15214-174M Type: Bag House Number of bags: 24 Air to Cloth ratio: 5.4 to 1 PM_{10} control efficiency: 99.97%	Exit height: 30 ft Exit diameter: .5 ft Exit flow rate: 1050 acfm Exit temperature: 85 °F

Idahoan Foods, LLC Idaho Falls Facility P-2012.0020 PROJ 61031

Source ID No.	Sources	Control Equipment	Emission Point ID No.
18	Emissions Unit Name: Bag House Finished Product Real Line #1 Manufacturer: Ktron Model: PF15214-186M.1 Burner Model: NA Manufacture Date: 2012 Heat input rating: NA MMBtu/hr Max. production: 1.88 T/hr Fuel: NA Fuel consumption: NA gal/hr	Control Device Name: Bag House Finished Product Real Line #1 Manufacturer: Ktron Model: PF15214-186M.1 Type: Bag House Number of bags: 30 Air to Cloth ratio: 4.8 to 1 PM_{10} control efficiency: 99.97%	Exit height: 30 ft Exit diameter: .5 ft Exit flow rate: 1050 acfm Exit temperature: 85 °F

Idahoan Foods, LLC Idaho Falls Facility P-2012.0020 PROJ 61031

Source ID No.	Sources	Control Equipment	Emission Point ID No.
19	Emissions Unit Name: Real Line A Tote Loading Station Manufacturer: Ktron Model: PF15214-186M.1 Burner Model: NA Manufacture Date: 2012 Heat input rating: NA MMBtu/hr Max. production: 1.88 T/hr Fuel: NA Fuel consumption: NA gal/hr	Control Device Name: Real Line A Tote Loading Station Bag House Manufacturer: Ktron Model: PF15214-186M.1 Type: Bag House Number of bags: 30 Air to Cloth ratio: 4.8 to 1 PM_{10} control efficiency: 99.97%	Exit height: 30 ft Exit diameter: .5 ft Exit flow rate: 1050 acfm Exit temperature: 85 °F

Idahoan Foods, LLC Idaho Falls Facility P-2012.0020 PROJ 61031

Source ID No.	Sources	Control Equipment	Emission Point ID No.
20	Emissions Unit Name: Creamy Mash Loading Station Manufacturer: Joyeno Model: Unknown Burner Model: NA Manufacture Date: 1985 Heat input rating: MMBtu/hr Max. production: .75 T/hr Fuel: NA Fuel consumption: NA gal/hr	Control Device Name: Creamy Mash Loading Station Manufacturer: Joyeno Model: Unknown Type: Bag house Number of bags: 6 Air to Cloth ratio: 6 to 1 PM_{10} control efficiency: 99.97%	Exit height: 40 ft Exit diameter: .5 ft Exit flow rate: 1050 acfm Exit temperature: 85°F

Idahoan Foods, LLC Idaho Falls Facility P-2012.0020 PROJ 61031

Source ID No.	Sources	Control Equipment	Emission Point ID No.
21	Emissions Unit Name: Bag House Finished Product Transfer, Creamy Mash Manufacturer: Ktron Model: PF15214-186M.1 Burner Model: NA Manufacture Date: 2012 Heat input rating: NA MMBtu/hr Max. production: .75 T/hr Fuel: NA Fuel consumption: NA gal/hr	Control Device Name: Bag House Finished Product Transfer, Creamy Mash Manufacturer: Ktron Model: PF15214-186M.1 Type: Bag House Number of bags: 30 Air to Cloth ratio: 4.8to 1 PM_{10} control efficiency: 99.97%	Exit height: 30 ft Exit diameter: .5 Exit flow rate: 1050 acfm Exit temperature: 85 °F

Idahoan Foods, LLC Idaho Falls Facility P-2012.0020 PROJ 61031

Source ID No.	Sources	Control Equipment	Emission Point ID No.
22	Emissions Unit Name: Bag House Exhaust Dust Collector System Manufacturer: Unknown Model: Unknown Burner Model: NA Manufacture Date: 1985 Heat input rating: NA MMBtu/hr Max. production: .0005 T/hr Fuel: NA Fuel consumption: NA gal/hr	Control Device Name: Bag House Exhaust Dust Collector System Manufacturer: Unknown Model: Unknown Type: Bag House Number of bags: Unknown Air to Cloth ratio: Unknown to 1 PM_{10} control efficiency: 99.97%	Exit height: 30 ft Exit diameter: .5 ft Exit flow rate: 1050 acfm Exit temperature: 85 °F

Idahoan Foods, LLC Idaho Falls Facility P-2012.0020 PROJ 61031

Source ID No.	Sources	Control Equipment	Emission Point ID No.
23	Emissions Unit Name: Cyclone, Burner/Exhaust, Fluid Bed Dryer, Real #1 Manufacturer: Eclipse (Burner)/Idaho Steel (cyclone) Model: TAG 1000/Hcyclone Burner Model: TAG 1000 Manufacture Date:2012/2012 Heat input rating: 10 MMBtu/hr Max. production: 1.88 T/hr Fuel: Natural Gas Fuel consumption: 9675scf/hr	Control Device Name: Cyclone, Burner/Exhaust, Fluid Bed Dryer, Real #1 Manufacturer:Idaho Steel Inc. Model: H Type: Cyclone Number of bags: NA Air to Cloth ratio: NA PM_{10} control efficiency: 98%	Exit height: 40 ft Exit diameter: 2 ft Exit flow rate: 51,000acfm Exit temperature: 160 °F

Idahoan Foods, LLC Idaho Falls Facility P-2012.0020 PROJ 61031

Source ID No.	Sources	Control Equipment	Emission Point ID No.
24	Emissions Unit Name: Cyclone Burner/Exhaust Fluid Bed Dryer, Real #2 Manufacturer: Eclipse (Burner)/ Idaho Steel (Cyclone) Model: TAG 1000/Hcyclone Burner Model: TAG 1000 Manufacture Date: 2012/2012 Heat input rating: 10 MMBtu/hr Max. production: 1.88 T/hr Fuel: Natural Gas Fuel consumption: 9675 scf/hr	Control Device Name: Cyclone Burner/Exhaust Fluid Bed Dryer, Real #2 Manufacturer: : Idaho Steel Model: H Type: Cyclone Number of bags: NA Air to Cloth ratio: NA PM_{10} control efficiency: 98%	Exit height: 40 ft Exit diameter: 2 ft Exit flow rate: 51,000acfm Exit temperature: 160 °F

Idahoan Foods, LLC Idaho Falls Facility P-2012.0020 PROJ 61031

Source ID No.	Sources	Control Equipment	Emission Point ID No.
25	Emissions Unit Name: Cyclone Exhaust Creamy Mash Manufacturer: Welliver Model: 6082D1 Burner Model: NA Manufacture Date: 1985 Heat input rating: NA MMBtu/hr Max. production: .75 T/hr Fuel: Steam Fuel consumption: 0 gal/hr	Control Device Name: Cyclone Exhaust Creamy Mash Manufacturer: Welliver Model: 6082D1 Type: Cyclone Number of bags: NA Air to Cloth ratio: NA PM_{10} control efficiency: 98%	Exit height: 30 ft Exit diameter: 1 ft Exit flow rate: 12000 acfm Exit temperature: 160 °F

Idahoan Foods, LLC Idaho Falls Facility P-2012.0020 PROJ 61031

Source ID No.	Sources	Control Equipment	Emission Point ID No.
26	Emissions Unit Name: Bag House Flake Tank Rejects Manufacturer: Ktron Model: F15214-174M Burner Model: NA Manufacture Date: 2012 Heat input rating: NA MMBtu/hr Max. production: 3.75 T/hr Fuel: NA Fuel consumption: NA gal/hr	Control Device Name: Bag House Flake Tank Rejects Manufacturer: Ktron Model: F15214-174M Type: Bag House Number of bags: 24 Air to Cloth ratio: 5.4 to 1 PM_{10} control efficiency: 99.97%	Exit height: 30 ft Exit diameter: .5 ft Exit flow rate: 1050 acfm Exit temperature: 85 °F

From: Leo Herbert <lherbert@idahoan.com>
Sent: Wednesday, May 23, 2012 4:27 PM
To: Shawnee Chen
Subject: Air Permit, Facility 019-00038, Idaho Falls, ID
Attachments: Source Information 1.docx; Source Information 13.docx; Source Information 6.docx; Source Information 5.docx; Source Information 4.docx; Source Information 3.docx; Source Information 9.docx; Source Information 20.docx; Source Information 25.docx; Source Information 12.docx; Source Information 11.docx; Source Information 10.docx; Source Information 8.docx; Source Information 7.docx; Source Information 23.docx; Source Information 24.docx; Source Information 26.docx; Source Information 22.docx; Source Information 21.docx; Source Information 19.docx; Source Information 18.docx; Source Information 17.docx; Source Information 16.docx; Source Information 14.docx; Source Information 15.docx; Source Information 2.docx; 579957-form_eu0_9.doc; 579957-form_eu0_13.doc; 579957-form_eu0_26.doc; 579957-form_eu0_25.doc; 579957-form_eu0_24.doc; 579957-form_eu0_23.doc; 579957-form_eu0_22.doc; 579957-form_eu0_21.doc; 579957-form_eu0_20.doc; 579957-form_eu0_19.doc; 579957-form_eu0_18.doc; 579957-form_eu0_17.doc; 579957-form_eu0_16.doc; 579957-form_eu0_15.doc; 579957-form_eu0_14.doc; 579957-form_eu0_8.doc; 579957-form_eu0_6.doc; 579957-form_eu0_5.doc; 579957-form_eu0_3.doc; 579957-form_eu0_7.doc; 579957-form_eu0_4.doc; 579957-form_eu0_12.doc; 579957-form_eu0_11.doc; 579957-form_eu0_10.doc; 579957-form_eu0_ 2.doc; 579957-form_eu0_1.doc

This should be all the forms you requested.

Let me know if you need anything else?

Leo Herbert
Corporate Environmental Manager

Idahoan Foods, LLC
208-754-8194
lherbert@Idahoan.com

Idahoan Foods, LLC Idaho Falls Facility P-2012.0020 PROJ 61031

Source ID No.	Sources	Control Equipment	Emission Point ID No.
1	Emissions Unit Name: Manufacturer: CLEVER BROOKS Model: WT200X-CN5 Burner Model: Axially Fired Manufacture Date: 1974 Heat input rating: 61.6 MMBtu/hr Max. production: NA T/hr Fuel: Natural Gas Fuel consumption: 59,553 scf/hr		Exit height: 26 ft Exit diameter: 3.42 ft Exit flow rate: 15,295 acfm Exit temperature: 390 °F

Idahoan Foods, LLC Idaho Falls Facility P-2012.0020 PROJ 61031

Source ID No.	Sources	Control Equipment	Emission Point ID No.
2	Emissions Unit Name: Manufacturer: CLEVER BROOKS Model: L34 Burner Model: Axially Fired Manufacture Date: 1968 Heat input rating: 26.7 MMBtu/hr Max. production: NA T/hr Fuel: Natural Gas Fuel consumption: 25,783 scf/hr		Exit height: 26 ft Exit diameter: 3.42 ft Exit flow rate: 9,193 acfm Exit temperature: 360 °F

Idahoan Foods, LLC Idaho Falls Facility P-2012.0020 PROJ 61031

Source ID No.	Sources	Control Equipment	Emission Point ID No.
3	Emissions Unit Name: Dryer Flaker/Drum Type #1 Manufacturer: Blaw Knox Model: 105 Burner Model: NA Manufacture Date: 1974 Heat input rating: NA MMBtu/hr Max. production: 2.5 T/hr, for all 4 Flakers combined. Fuel: NA Fuel consumption: NA gal/hr	Control Device Name: **NA**	Exit height: 30 ft Exit diameter: .8 ft Exit flow rate: 10,000 acfm Exit temperature: 110 °F

Idahoan Foods, LLC Idaho Falls Facility P-2012.0020 PROJ 61031

Source ID No.	Sources	Control Equipment	Emission Point ID No.
4	Emissions Unit Name: Dryer Flaker/Drum Type #2 Manufacturer: Blaw Knox Model: 105 Burner Model: NA Manufacture Date: 1974 Heat input rating: NA MMBtu/hr Max. production: 2.5 T/hr for all 4 flakers combined. Fuel: NA Fuel consumption: NA gal/hr	Control Device Name: NA	Exit height: 30 ft Exit diameter: .8 ft Exit flow rate: 10,000 acfm Exit temperature: 110 °F

Idahoan Foods, LLC Idaho Falls Facility P-2012.0020 PROJ 61031

Source ID No.	Sources	Control Equipment	Emission Point ID No.
5	Emissions Unit Name: Dryer Flaker/Drum Type #3 Manufacturer: Idaho Steel Model: 6X20-5 Roll Drum Burner Model: NA Manufacture Date: 2004 Heat input rating: NA MMBtu/hr Max. production: 2.5 T/hr for all 4 flakers combined. Fuel: NA Fuel consumption: NA gal/hr	Control Device Name: NA	Exit height: 30 ft Exit diameter: .8 ft Exit flow rate: 20,000 acfm Exit temperature: 110 °F

Idahoan Foods, LLC Idaho Falls Facility P-2012.0020 PROJ 61031

Source ID No.	Sources	Control Equipment	Emission Point ID No.
6	Emissions Unit Name: Dryer Flaker Drum Type #4 Manufacturer: Idaho Steel Model: 6X20 5 Roll Drum Burner Model: NA Manufacture Date: 1985 Heat input rating: NA MMBtu/hr Max. production: 2.5 T/hr for all 4 Flakers combined. Fuel: NA Fuel consumption: NA gal/hr	Control Device Name: NA	Exit height: 30 ft Exit diameter: .8 ft Exit flow rate: 20,000 acfm Exit temperature: 110 °F

Idahoan Foods, LLC Idaho Falls Facility P-2012.0020 PROJ 61031

Source ID No.	Sources	Control Equipment	Emission Point ID No.
7	Emissions Unit Name: Flaker lines 1 & 2 Vaculift Manufacturer: Vaculift Model: Burner Model: NA Manufacture Date: 1981 Heat input rating: NA MMBtu/hr Max. production: .86 T/hr Fuel: NA Fuel consumption: NA gal/hr	Control Device Name: Manufacturer: Vaculift Model: None Type: Cyclone Number of bags: NA Air to Cloth ratio: NA PM_{10} control efficiency: 95%	Exit height: 30 ft Exit diameter: .8 ft Exit flow rate: 1140 acfm Exit temperature: 110 °F

Idahoan Foods, LLC Idaho Falls Facility P-2012.0020 PROJ 61031

Source ID No.	Sources	Control Equipment	Emission Point ID No.
8	Emissions Unit Name: Flaker line 3 Vaculift Manufacturer: Vaculift Model: NA Burner Model: NA Manufacture Date: 1995 Heat input rating: NA MMBtu/hr Max. production: .82 T/hr Fuel: NA Fuel consumption: NA gal/hr	Control Device Name: Manufacturer: Vaculift Model: None Type: Cyclone Number of bags: NA Air to Cloth ratio: NA to 1 PM_{10} control efficiency: 95%	Exit height: 30 ft Exit diameter: .8 ft Exit flow rate: 990 acfm Exit temperature: 110 °F

Idahoan Foods, LLC Idaho Falls Facility P-2012.0020 PROJ 61031

Source ID No.	Sources	Control Equipment	Emission Point ID No.
9	Emissions Unit Name: Flaker line 4 Vaculift & Bag House Manufacturer: Unknown Model: NA Burner Model: NA Manufacture Date: 2012 Heat input rating: NA MMBtu/hr Max. production: .75 T/hr Fuel: NA Fuel consumption: NA gal/hr	Control Device Name: Vaculift & Bag House Manufacturer:Vaculift/SMME Model: Unknown Type: Cyclone/Bag House Number of bags: 25 Air to Cloth ratio: 10 to 1 PM_{10} control efficiency: 99.97%	Exit height: 30 ft Exit diameter: .8 ft Exit flow rate: 1050 acfm Exit temperature: 110 °F

Idahoan Foods, LLC Idaho Falls Facility P-2012.0020 PROJ 61031

Source ID No.	Sources	Control Equipment	Emission Point ID No.
10	Emissions Unit Name: Air Makeup Unit #1 Waste Plant Manufacturer: Idahoan Model: NA Burner Model: Unknown Manufacture Date: 1971 Heat input rating: 2.5 MMBtu/hr Max. production: NA T/hr Fuel: Natural Gas Fuel consumption: 2,418 scf/hr		

Idahoan Foods, LLC Idaho Falls Facility P-2012.0020 PROJ 61031

Source ID No.	Sources	Control Equipment	Emission Point ID No.
11	Emissions Unit Name: Air Makeup Unit #2 Flake room Manufacturer: King Model: 6225 MNHRB Burner Model: NA Manufacture Date: 1971 Heat input rating: 2.5 MMBtu/hr Max. production: NA T/hr Fuel: Natural Gas Fuel consumption: 2,418 scf/hr		

Idahoan Foods, LLC Idaho Falls Facility P-2012.0020 PROJ 61031

Source ID No.	Sources	Control Equipment	Emission Point ID No.
12	Emissions Unit Name: Air Makeup Unit #3 Bag Room Manufacturer: hartzell Model: 81-60-P3 Burner Model: NA Manufacture Date: 1971 Heat input rating: 5 MMBtu/hr Max. production: NA T/hr Fuel: Natural Gas Fuel consumption: 4,836 scf/hr		

Idahoan Foods, LLC Idaho Falls Facility P-2012.0020 PROJ 61031

Source ID No.	Sources	Control Equipment	Emission Point ID No.
13	Emissions Unit Name: Air Makeup Unit #4 Warehouse Manufacturer: REYCO Model: Gas Pac 500 Burner Model: Gas Pac 500 Manufacture Date: 2012 Heat input rating: 5.5 MMBtu/hr Max. production: NA T/hr Fuel: Natural Gas Fuel consumption: 7,250 scf/hr		

Idahoan Foods, LLC Idaho Falls Facility P-2012.0020 PROJ 61031

Source ID No.	Sources	Control Equipment	Emission Point ID No.
14	Emissions Unit Name: BAG HOUSE, DAY TANK "A", REAL LINE Manufacturer: Ktron Model: F15214-174M Burner Model: NA Manufacture Date: 2012 Heat input rating: NA MMBtu/hr Max. production: 3.75 T/hr Fuel: NA Fuel consumption: NA gal/hr	Control Device Name: BAG HOUSE, DAY TANK "A", REAL LINE Manufacturer: Ktron Model: F15214-174M Type: Bag House Number of bags: 24 Air to Cloth ratio: 5.4 to 1 PM_{10} control efficiency: 99.97%	Exit height: 30 ft Exit diameter: .5 ft Exit flow rate: 1050 acfm Exit temperature: 85 °F

Idahoan Foods, LLC Idaho Falls Facility P-2012.0020 PROJ 61031

Source ID No.	Sources	Control Equipment	Emission Point ID No.
15	Emissions Unit Name: Bag House Day Tank B Real line Manufacturer: Ktron Model: F15214-174M Burner Model: NA Manufacture Date: 2012 Heat input rating: NA MMBtu/hr Max. production: 3.75 T/hr Fuel: NA Fuel consumption: NA gal/hr	Control Device Name: Manufacturer: Ktron Model: F15214-174M Type: Bag House Number of bags: 24 Air to Cloth ratio: 5.4 to 1 PM_{10} control efficiency: 99.97%	Exit height: 30 ft Exit diameter: .5 ft Exit flow rate: 1050 acfm Exit temperature: 85 °F

Idahoan Foods, LLC Idaho Falls Facility P-2012.0020 PROJ 61031

Source ID No.	Sources	Control Equipment	Emission Point ID No.
16	Emissions Unit Name: Bag House Product Transfer Real Line #1 Manufacturer: Ktron Model: F15214-174M Burner Model: NA Manufacture Date: 2012 Heat input rating: NA MMBtu/hr Max. production: 1.88 T/hr Fuel: NA Fuel consumption: NA gal/hr	Control Device Name: Manufacturer: Ktron Model: F15214-174M Type: Bag House Number of bags: 24 Air to Cloth ratio: 5.4 to 1 PM_{10} control efficiency: 99.97%	Exit height: 30 ft Exit diameter: .5 ft Exit flow rate: 1050 acfm Exit temperature: 85 °F

Idahoan Foods, LLC Idaho Falls Facility P-2012.0020 PROJ 61031

Source ID No.	Sources	Control Equipment	Emission Point ID No.
17	Emissions Unit Name: Bag House Product Transfer Real Line #2 Manufacturer: Ktron Model: F15214-174M Burner Model: NA Manufacture Date: 2012 Heat input rating: NA MMBtu/hr Max. production: 1.88 T/hr Fuel: NA Fuel consumption: NA gal/hr	Control Device Name: Manufacturer: Ktron Model: F15214-174M Type: Bag House Number of bags: 24 Air to Cloth ratio: 5.4 to 1 PM_{10} control efficiency: 99.97%	Exit height: 30 ft Exit diameter: .5 ft Exit flow rate: 1050 acfm Exit temperature: 85 °F

Idahoan Foods, LLC Idaho Falls Facility P-2012.0020 PROJ 61031

Source ID No.	Sources	Control Equipment	Emission Point ID No.
18	Emissions Unit Name: Bag House Finished Product Real Line #1 Manufacturer: Ktron Model: PF15214-186M.1 Burner Model: NA Manufacture Date: 2012 Heat input rating: NA MMBtu/hr Max. production: 1.88 T/hr Fuel: NA Fuel consumption: NA gal/hr	Control Device Name: Bag House Finished Product Real Line #1 Manufacturer: Ktron Model: PF15214-186M.1 Type: Bag House Number of bags: 30 Air to Cloth ratio: 4.8 to 1 PM_{10} control efficiency: 99.97%	Exit height: 30 ft Exit diameter: .5 ft Exit flow rate: 1050 acfm Exit temperature: 85 °F

Idahoan Foods, LLC Idaho Falls Facility P-2012.0020 PROJ 61031

Source ID No.	Sources	Control Equipment	Emission Point ID No.
19	Emissions Unit Name: Real Line A Tote Loading Station Manufacturer: Ktron Model: PF15214-186M.1 Burner Model: NA Manufacture Date: 2012 Heat input rating: NA MMBtu/hr Max. production: 1.88 T/hr Fuel: NA Fuel consumption: NA gal/hr	Control Device Name: Real Line A Tote Loading Station Bag House Manufacturer: Ktron Model: PF15214-186M.1 Type: Bag House Number of bags: 30 Air to Cloth ratio: 4.8 to 1 PM_{10} control efficiency: 99.97%	Exit height: 30 ft Exit diameter: .5 ft Exit flow rate: 1050 acfm Exit temperature: 85 °F

Idahoan Foods, LLC Idaho Falls Facility P-2012.0020 PROJ 61031

Source ID No.	Sources	Control Equipment	Emission Point ID No.
20	Emissions Unit Name: Creamy Mash Loading Station Manufacturer: Joyeno Model: Unknown Burner Model: NA Manufacture Date: 1985 Heat input rating: MMBtu/hr Max. production: .75 T/hr Fuel: NA Fuel consumption: NA gal/hr	Control Device Name: Creamy Mash Loading Station Manufacturer: Joyeno Model: Unknown Type: Bag house Number of bags: 6 Air to Cloth ratio: 6 to 1 PM_{10} control efficiency: 99.97%	Exit height: 40 ft Exit diameter: .5 ft Exit flow rate: 1050 acfm Exit temperature: 85°F

Idahoan Foods, LLC Idaho Falls Facility P-2012.0020 PROJ 61031

Source ID No.	Sources	Control Equipment	Emission Point ID No.
21	Emissions Unit Name: Bag House Finished Product Transfer, Creamy Mash Manufacturer: Ktron Model: PF15214-186M.1 Burner Model: NA Manufacture Date: 2012 Heat input rating: NA MMBtu/hr Max. production: .75 T/hr Fuel: NA Fuel consumption: NA gal/hr	Control Device Name: Bag House Finished Product Transfer, Creamy Mash Manufacturer: Ktron Model: PF15214-186M.1 Type: Bag House Number of bags: 30 Air to Cloth ratio: 4.8to 1 PM_{10} control efficiency: 99.97%	Exit height: 30 ft Exit diameter: .5 Exit flow rate: 1050 acfm Exit temperature: 85 °F

Idahoan Foods, LLC Idaho Falls Facility P-2012.0020 PROJ 61031

Source ID No.	Sources	Control Equipment	Emission Point ID No.
22	Emissions Unit Name: Bag House Exhaust Dust Collector System Manufacturer: Unknown Model: Unknown Burner Model: NA Manufacture Date: 1985 Heat input rating: NA MMBtu/hr Max. production: .0005 T/hr Fuel: NA Fuel consumption: NA gal/hr	Control Device Name: Bag House Exhaust Dust Collector System Manufacturer: Unknown Model: Unknown Type: Bag House Number of bags: Unknown Air to Cloth ratio: Unknown to 1 PM_{10} control efficiency: 99.97%	Exit height: 30 ft Exit diameter: .5 ft Exit flow rate: 1050 acfm Exit temperature: 85 °F

Idahoan Foods, LLC Idaho Falls Facility P-2012.0020 PROJ 61031

Source ID No.	Sources	Control Equipment	Emission Point ID No.
23	Emissions Unit Name: Cyclone, Burner/Exhaust, Fluid Bed Dryer, Real #1 Manufacturer: Eclipse (Burner)/Idaho Steel (cyclone) Model: TAG 1000/Hcyclone Burner Model: TAG 1000 Manufacture Date:2012/2012 Heat input rating: 10 MMBtu/hr Max. production: 1.88 T/hr Fuel: Natural Gas Fuel consumption: 9675scf/hr	Control Device Name: Cyclone, Burner/Exhaust, Fluid Bed Dryer, Real #1 Manufacturer:Idaho Steel Inc. Model: H Type: Cyclone Number of bags: NA Air to Cloth ratio: NA PM_{10} control efficiency: 98%	Exit height: 40 ft Exit diameter: 2 ft Exit flow rate: 51,000acfm Exit temperature: 160 °F

Idahoan Foods, LLC Idaho Falls Facility P-2012.0020 PROJ 61031

Source ID No.	Sources	Control Equipment	Emission Point ID No.
24	Emissions Unit Name: Cyclone Burner/Exhaust Fluid Bed Dryer, Real #2 Manufacturer: Eclipse (Burner)/ Idaho Steel (Cyclone) Model: TAG 1000/Hcyclone Burner Model: TAG 1000 Manufacture Date: 2012/2012 Heat input rating: 10 MMBtu/hr Max. production: 1.88 T/hr Fuel: Natural Gas Fuel consumption: 9675 scf/hr	Control Device Name: Cyclone Burner/Exhaust Fluid Bed Dryer, Real #2 Manufacturer: : Idaho Steel Model: H Type: Cyclone Number of bags: NA Air to Cloth ratio: NA PM_{10} control efficiency: 98%	Exit height: 40 ft Exit diameter: 2 ft Exit flow rate: 51,000acfm Exit temperature: 160 °F

Idahoan Foods, LLC Idaho Falls Facility P-2012.0020 PROJ 61031

Source ID No.	Sources	Control Equipment	Emission Point ID No.
25	Emissions Unit Name: Cyclone Exhaust Creamy Mash Manufacturer: Welliver Model: 6082D1 Burner Model: NA Manufacture Date: 1985 Heat input rating: NA MMBtu/hr Max. production: .75 T/hr Fuel: Steam Fuel consumption: 0 gal/hr	Control Device Name: Cyclone Exhaust Creamy Mash Manufacturer: Welliver Model: 6082D1 Type: Cyclone Number of bags: NA Air to Cloth ratio: NA PM_{10} control efficiency: 98%	Exit height: 30 ft Exit diameter: 1 ft Exit flow rate: 12000 acfm Exit temperature: 160 °F

Idahoan Foods, LLC Idaho Falls Facility P-2012.0020 PROJ 61031

Source ID No.	Sources	Control Equipment	Emission Point ID No.
26	Emissions Unit Name: Bag House Flake Tank Rejects Manufacturer: Ktron Model: F15214-174M Burner Model: NA Manufacture Date: 2012 Heat input rating: NA MMBtu/hr Max. production: 3.75 T/hr Fuel: NA Fuel consumption: NA gal/hr	Control Device Name: Bag House Flake Tank Rejects Manufacturer: Ktron Model: F15214-174M Type: Bag House Number of bags: 24 Air to Cloth ratio: 5.4 to 1 PM_{10} control efficiency: 99.97%	Exit height: 30 ft Exit diameter: .5 ft Exit flow rate: 1050 acfm Exit temperature: 85 °F

DEQ AIR QUALITY PROGRAM
1410 N. Hilton, Boise, ID 83706
For assistance, call the
Air Permit Hotline – 1-877-5PERMIT

Emissions Unit - General **Form EU0**
Revision 4
08/28/08

Please see instructions on page 2 before filling out the form.

IDENTIFICATION

1. Company Name:	2. Facility Name:	3. Facility ID No:
Idahoan Foods, LLC	Idaho Falls Facility	019-00038

4. Brief Project Description:	Replacing Three Proctors with 2 Fluid Bed Dryers and Adding a Drum Dryer

EMISSIONS UNIT (PROCESS) IDENTIFICATION & DESCRIPTION

5.	Emissions Unit (EU) Name:	BOILER # 1
6.	EU ID Number:	1
7.	EU Type:	☐ New Source ☐ Unpermitted Existing Source ☒ Modification to a Permitted Source -- Previous Permit #:T2-2009.0027 Date Issued: 5/9/2008
8.	Manufacturer:	CLEVER BROOKS
9.	Model:	WT200X-CN5
10..	Maximum Capacity:	61.6 MILLION BTU/HR
11.	Date of Construction:	1974
12.	Date of Modification (if any):	1981
13.	Is this a Controlled Emission Unit?	☒ No ☐ Yes If Yes, complete the following section. If No, go to line 22.

EMISSIONS CONTROL EQUIPMENT

14. Control Equipment Name and ID:	
15. Date of Installation:	16. Date of Modification (if any):
17. Manufacturer and Model Number:	
18. ID(s) of Emission Unit Controlled:	
19. Is operating schedule different than emission units(s) involved?	☐ Yes ☐ No
20. Does the manufacturer guarantee the control efficiency of the control equipment?	☐ Yes ☐ No (If Yes, attach and label manufacturer guarantee)

	Pollutant Controlled					
	PM	PM10	SO_2	NOx	VOC	CO
Control Efficiency						

21. If manufacturer's data is not available, attach a separate sheet of paper to provide the control equipment design specifications and performance data to support the above mentioned control efficiency.

EMISSION UNIT OPERATING SCHEDULE (hours/day, hours/year, or other)

22.	Actual Operation:	8424
23.	Maximum Operation:	8760

REQUESTED LIMITS

24.	Are you requesting any permit limits?	☐ Yes ☒ No (If Yes, indicate all that apply below)
	☐ Operation Hour Limit(s):	
	☐ Production Limit(s):	
	☐ Material Usage Limit(s):	
	☐ Limits Based on Stack Testing:	Please attach all relevant stack testing summary reports
	☐ Other:	
25.	Rationale for Requesting the Limit(s):	

Instructions for Form EU0

This form provides DEQ with information about an emissions unit. An emissions unit is the equipment or process that generates emissions of regulated air pollutant(s). This form is used by the permit writer to become familiar with the emissions unit (EU). This form is also used by DEQ to identify the control equipment and the emission point (stack or vent) used for the emission unit(s) proposed in this permit application. This form also asks for supporting documents to verify stated control efficiencies and details about the emission point. Additional information may be requested.

1 - 4. Provide the same company name, facility name (if different), facility ID number, and brief project description as on Form CS in the boxes provided. This is useful in case any pages of the application get separated.

5. Provide the name of the emissions unit (EU), such as “Union boiler,” etc. A separate EU0 form is required for each emissions unit.

6. Provide the identification (ID) number of the EU. It can be any unique identifier you choose; however, this ID number should be unique to this EU and should be used consistently throughout this application and any other air quality permit application(s) (e.g., operating permit application) to identify this EU.

7. Indicate the type of EU by checking the appropriate box (e.g., a new source to be constructed, an unpermitted existing source (as-built) applying for the first time, or an existing permitted source to be modified). If the EU is being modified, indicate on the form the most recent permit issued for the EU.

8. Provide the manufacturer's name for the EU. If the EU is custom-designed or homemade, indicate so.

9. Provide the model number of the EU. If the EU is custom-designed or homemade, indicate so.

10. Provide the maximum capacity of the EU. For example, a boiler’s rated capacity may be modified in units of MMBtu/hr in terms of heat input of natural gas; an assembly line capacity may be in parts produced per day. Capacity should be based on a rated nameplate or as stated in the manufacturer’s literature.

11. The date of construction is the month, day, and year in which construction or modification was commenced.

Definitions:

Construction fabrication, erection, or installation of an affected facility.

Commenced an owner or operator has undertaken a continuous program of construction or modification or that an owner or operator has entered into a contractual obligation to undertake and complete, within a reasonable time, a continuous program of construction or modification.

Modification any physical change in, or change in the method of operation of, an existing facility which increases the amount of any air pollutant (to which a standard applies) emitted to the atmosphere by that facility or which results in the emission of any air pollutant (to which a standard applies) to the atmosphere not previously emitted.

12. If the EU has been or will be modified, provide the month, day, and year of the most recent or future modification as defined in IDAPA 58.01.01.006.

13. Indicate if emissions from the EU are controlled by air pollution control equipment. If the answer is yes, complete the next section. If the answer is no, go to line 18.

14. Provide the name of the air pollution control equipment (e.g., wet scrubber) and the control equipment’s identification number. This identification number should be unique to this air pollution control equipment and should be used consistently throughout this and all other air quality permit applications (e.g., operating permit application) to identify this air pollution control equipment.

15. Provide the date the air pollution control equipment was installed.

16. If the air pollution control equipment has been modified, provide the date of the modification.

17. Provide the name of the manufacturer and the model number for the air pollution control equipment.

18. If this air pollution control equipment controls emissions from more than this EU, provide the identification number(s) of the other EU(s).

19. Indicate if this air pollution control equipment operates on a schedule different from the EU(s) it controls.

20. Indicate if the air pollution control manufacturer guarantees the control efficiency of the control equipment. If the answer is yes, attach the manufacturer's guarantee and label it with the air pollution control equipment identification number. Indicate the control efficiency for the target pollutant(s).

21. If the control efficiency of the air pollution control equipment is not guaranteed, attach the design specifications and any performance data to support the control efficiency stated in part 16. Label the supporting documentation with the air pollution control equipment identification number.

22. Provide the projected actual operating schedule for the emission unit in hours/day, hours/year, or other.

23. Provide the maximum operating schedule for the emission unit in hours/day, hours/year, or other.

24. If you are requesting to have limits placed on this EU, mark "Yes." Then, check the applicable requested limit(s) and provide the limit(s). For example, production limits may be in terms of parts produced per year, material usage limits may be in gallons per day.

25. Please provide the reason you are requesting limits, if any. This helps DEQ and the applicant determine whether the limits are necessary, and if they will accomplish the desired purpose. Provide supporting documentation (calculations, modeling assessment, regulatory review, etc.) for each limit requested.

DEQ AIR QUALITY PROGRAM
1410 N. Hilton, Boise, ID 83706
For assistance, call the
Air Permit Hotline – 1-877-5PERMIT

Emissions Unit - General **Form EU0**
Revision 4
08/28/08

Please see instructions on page 2 before filling out the form.

IDENTIFICATION

1. Company Name:	2. Facility Name:	3. Facility ID No:
Idahoan Foods, LLC	Idaho Falls Facility	019-00038

4. Brief Project Description:	Replacing Three Proctors with 2 Fluid Bed Dryers and Adding a Drum Dryer

EMISSIONS UNIT (PROCESS) IDENTIFICATION & DESCRIPTION

5.	Emissions Unit (EU) Name:	BOILER # 2
6.	EU ID Number:	2
7.	EU Type:	☐ New Source ☐ Unpermitted Existing Source ☒ Modification to a Permitted Source -- Previous Permit #:T2-2009.0027 Date Issued: 5/9/2008
8.	Manufacturer:	CLEVER BROOKS
9.	Model:	L34
10..	Maximum Capacity:	26.7 MILLION BTU/HR
11.	Date of Construction:	1968
12.	Date of Modification (if any):	1980
13.	Is this a Controlled Emission Unit?	☒ No ☐ Yes If Yes, complete the following section. If No, go to line 22.

EMISSIONS CONTROL EQUIPMENT

14. Control Equipment Name and ID:	
15. Date of Installation:	16. Date of Modification (if any):
17. Manufacturer and Model Number:	
18. ID(s) of Emission Unit Controlled:	
19. Is operating schedule different than emission units(s) involved?	☐ Yes ☐ No
20. Does the manufacturer guarantee the control efficiency of the control equipment?	☐ Yes ☐ No (If Yes, attach and label manufacturer guarantee)

	Pollutant Controlled					
	PM	PM10	SO_2	NOx	VOC	CO
Control Efficiency						

21. If manufacturer's data is not available, attach a separate sheet of paper to provide the control equipment design specifications and performance data to support the above mentioned control efficiency.

EMISSION UNIT OPERATING SCHEDULE (hours/day, hours/year, or other)

22.	Actual Operation:	8424
23.	Maximum Operation:	8760

REQUESTED LIMITS

24.	Are you requesting any permit limits?	☐ Yes ☒ No (If Yes, indicate all that apply below)
	☐ Operation Hour Limit(s):	
	☐ Production Limit(s):	
	☐ Material Usage Limit(s):	
	☐ Limits Based on Stack Testing:	Please attach all relevant stack testing summary reports
	☐ Other:	
25.	Rationale for Requesting the Limit(s):	

Instructions for Form EU0

This form provides DEQ with information about an emissions unit. An emissions unit is the equipment or process that generates emissions of regulated air pollutant(s). This form is used by the permit writer to become familiar with the emissions unit (EU). This form is also used by DEQ to identify the control equipment and the emission point (stack or vent) used for the emission unit(s) proposed in this permit application. This form also asks for supporting documents to verify stated control efficiencies and details about the emission point. Additional information may be requested.

1 - 4. Provide the same company name, facility name (if different), facility ID number, and brief project description as on Form CS in the boxes provided. This is useful in case any pages of the application get separated.

5. Provide the name of the emissions unit (EU), such as “Union boiler,” etc. A separate EU0 form is required for each emissions unit.

6. Provide the identification (ID) number of the EU. It can be any unique identifier you choose; however, this ID number should be unique to this EU and should be used consistently throughout this application and any other air quality permit application(s) (e.g., operating permit application) to identify this EU.

7. Indicate the type of EU by checking the appropriate box (e.g., a new source to be constructed, an unpermitted existing source (as-built) applying for the first time, or an existing permitted source to be modified). If the EU is being modified, indicate on the form the most recent permit issued for the EU.

8. Provide the manufacturer's name for the EU. If the EU is custom-designed or homemade, indicate so.

9. Provide the model number of the EU. If the EU is custom-designed or homemade, indicate so.

10. Provide the maximum capacity of the EU. For example, a boiler’s rated capacity may be modified in units of MMBtu/hr in terms of heat input of natural gas; an assembly line capacity may be in parts produced per day. Capacity should be based on a rated nameplate or as stated in the manufacturer’s literature.

11. The date of construction is the month, day, and year in which construction or modification was commenced.

Definitions:

Construction fabrication, erection, or installation of an affected facility.

Commenced an owner or operator has undertaken a continuous program of construction or modification or that an owner or operator has entered into a contractual obligation to undertake and complete, within a reasonable time, a continuous program of construction or modification.

Modification any physical change in, or change in the method of operation of, an existing facility which increases the amount of any air pollutant (to which a standard applies) emitted to the atmosphere by that facility or which results in the emission of any air pollutant (to which a standard applies) to the atmosphere not previously emitted.

12. If the EU has been or will be modified, provide the month, day, and year of the most recent or future modification as defined in IDAPA 58.01.01.006.

13. Indicate if emissions from the EU are controlled by air pollution control equipment. If the answer is yes, complete the next section. If the answer is no, go to line 18.

14. Provide the name of the air pollution control equipment (e.g., wet scrubber) and the control equipment’s identification number. This identification number should be unique to this air pollution control equipment and should be used consistently throughout this and all other air quality permit applications (e.g., operating permit application) to identify this air pollution control equipment.

15. Provide the date the air pollution control equipment was installed.

16. If the air pollution control equipment has been modified, provide the date of the modification.

17. Provide the name of the manufacturer and the model number for the air pollution control equipment.

18. If this air pollution control equipment controls emissions from more than this EU, provide the identification number(s) of the other EU(s).

19. Indicate if this air pollution control equipment operates on a schedule different from the EU(s) it controls.

20. Indicate if the air pollution control manufacturer guarantees the control efficiency of the control equipment. If the answer is yes, attach the manufacturer's guarantee and label it with the air pollution control equipment identification number. Indicate the control efficiency for the target pollutant(s).

21. If the control efficiency of the air pollution control equipment is not guaranteed, attach the design specifications and any performance data to support the control efficiency stated in part 16. Label the supporting documentation with the air pollution control equipment identification number.

22. Provide the projected actual operating schedule for the emission unit in hours/day, hours/year, or other.

23. Provide the maximum operating schedule for the emission unit in hours/day, hours/year, or other.

24. If you are requesting to have limits placed on this EU, mark "Yes." Then, check the applicable requested limit(s) and provide the limit(s). For example, production limits may be in terms of parts produced per year, material usage limits may be in gallons per day.

25. Please provide the reason you are requesting limits, if any. This helps DEQ and the applicant determine whether the limits are necessary, and if they will accomplish the desired purpose. Provide supporting documentation (calculations, modeling assessment, regulatory review, etc.) for each limit requested.

DEQ AIR QUALITY PROGRAM
1410 N. Hilton, Boise, ID 83706
For assistance, call the
Air Permit Hotline – 1-877-5PERMIT

Emissions Unit - General **Form EU0**
Revision 4
08/28/08

Please see instructions on page 2 before filling out the form.

IDENTIFICATION

1. Company Name:	2. Facility Name:	3. Facility ID No:
Idahoan Foods, LLC	Idaho Falls Facility	019-00038

4. Brief Project Description:	Replacing Three Proctors with 2 Fluid Bed Dryers and Adding a Drum Dryer

EMISSIONS UNIT (PROCESS) IDENTIFICATION & DESCRIPTION

5.	Emissions Unit (EU) Name:	DRYER, FLAKER/DRUM TYPE # 1
6.	EU ID Number:	3
7.	EU Type:	☐ New Source ☐ Unpermitted Existing Source ☒ Modification to a Permitted Source -- Previous Permit #:T2-2009.0027 Date Issued: 5/9/2008
8.	Manufacturer:	BLAW KNOX
9.	Model:	
10..	Maximum Capacity:	0.43 TONS /HR FLAKE PRODUCTION
11.	Date of Construction:	1974
12.	Date of Modification (if any):	N/A
13.	Is this a Controlled Emission Unit?	☒ No ☐ Yes If Yes, complete the following section. If No, go to line 22.

EMISSIONS CONTROL EQUIPMENT

14. Control Equipment Name and ID:	
15. Date of Installation:	16. Date of Modification (if any):
17. Manufacturer and Model Number:	
18. ID(s) of Emission Unit Controlled:	
19. Is operating schedule different than emission units(s) involved?	☐ Yes ☐ No
20. Does the manufacturer guarantee the control efficiency of the control equipment?	☐ Yes ☐ No (If Yes, attach and label manufacturer guarantee)

	Pollutant Controlled					
	PM	PM10	SO_2	NOx	VOC	CO
Control Efficiency						

21. If manufacturer's data is not available, attach a separate sheet of paper to provide the control equipment design specifications and performance data to support the above mentioned control efficiency.

EMISSION UNIT OPERATING SCHEDULE (hours/day, hours/year, or other)

22.	Actual Operation:	8424
23.	Maximum Operation:	8760

REQUESTED LIMITS

24.	Are you requesting any permit limits?	☐ Yes ☒ No (If Yes, indicate all that apply below)
	☐ Operation Hour Limit(s):	
	☐ Production Limit(s):	
	☐ Material Usage Limit(s):	
	☐ Limits Based on Stack Testing:	Please attach all relevant stack testing summary reports
	☐ Other:	
25.	Rationale for Requesting the Limit(s):	

Instructions for Form EU0

This form provides DEQ with information about an emissions unit. An emissions unit is the equipment or process that generates emissions of regulated air pollutant(s). This form is used by the permit writer to become familiar with the emissions unit (EU). This form is also used by DEQ to identify the control equipment and the emission point (stack or vent) used for the emission unit(s) proposed in this permit application. This form also asks for supporting documents to verify stated control efficiencies and details about the emission point. Additional information may be requested.

1 - 4. Provide the same company name, facility name (if different), facility ID number, and brief project description as on Form CS in the boxes provided. This is useful in case any pages of the application get separated.

5. Provide the name of the emissions unit (EU), such as “Union boiler,” etc. A separate EU0 form is required for each emissions unit.

6. Provide the identification (ID) number of the EU. It can be any unique identifier you choose; however, this ID number should be unique to this EU and should be used consistently throughout this application and any other air quality permit application(s) (e.g., operating permit application) to identify this EU.

7. Indicate the type of EU by checking the appropriate box (e.g., a new source to be constructed, an unpermitted existing source (as-built) applying for the first time, or an existing permitted source to be modified). If the EU is being modified, indicate on the form the most recent permit issued for the EU.

8. Provide the manufacturer's name for the EU. If the EU is custom-designed or homemade, indicate so.

9. Provide the model number of the EU. If the EU is custom-designed or homemade, indicate so.

10. Provide the maximum capacity of the EU. For example, a boiler’s rated capacity may be modified in units of MMBtu/hr in terms of heat input of natural gas; an assembly line capacity may be in parts produced per day. Capacity should be based on a rated nameplate or as stated in the manufacturer’s literature.

11. The date of construction is the month, day, and year in which construction or modification was commenced.

Definitions:

Construction fabrication, erection, or installation of an affected facility.

Commenced an owner or operator has undertaken a continuous program of construction or modification or that an owner or operator has entered into a contractual obligation to undertake and complete, within a reasonable time, a continuous program of construction or modification.

Modification any physical change in, or change in the method of operation of, an existing facility which increases the amount of any air pollutant (to which a standard applies) emitted to the atmosphere by that facility or which results in the emission of any air pollutant (to which a standard applies) to the atmosphere not previously emitted.

12. If the EU has been or will be modified, provide the month, day, and year of the most recent or future modification as defined in IDAPA 58.01.01.006.

13. Indicate if emissions from the EU are controlled by air pollution control equipment. If the answer is yes, complete the next section. If the answer is no, go to line 18.

14. Provide the name of the air pollution control equipment (e.g., wet scrubber) and the control equipment’s identification number. This identification number should be unique to this air pollution control equipment and should be used consistently throughout this and all other air quality permit applications (e.g., operating permit application) to identify this air pollution control equipment.

15. Provide the date the air pollution control equipment was installed.

16. If the air pollution control equipment has been modified, provide the date of the modification.

17. Provide the name of the manufacturer and the model number for the air pollution control equipment.

18. If this air pollution control equipment controls emissions from more than this EU, provide the identification number(s) of the other EU(s).

19. Indicate if this air pollution control equipment operates on a schedule different from the EU(s) it controls.

20. Indicate if the air pollution control manufacturer guarantees the control efficiency of the control equipment. If the answer is yes, attach the manufacturer's guarantee and label it with the air pollution control equipment identification number. Indicate the control efficiency for the target pollutant(s).

21. If the control efficiency of the air pollution control equipment is not guaranteed, attach the design specifications and any performance data to support the control efficiency stated in part 16. Label the supporting documentation with the air pollution control equipment identification number.

22. Provide the projected actual operating schedule for the emission unit in hours/day, hours/year, or other.

23. Provide the maximum operating schedule for the emission unit in hours/day, hours/year, or other.

24. If you are requesting to have limits placed on this EU, mark "Yes." Then, check the applicable requested limit(s) and provide the limit(s). For example, production limits may be in terms of parts produced per year, material usage limits may be in gallons per day.

25. Please provide the reason you are requesting limits, if any. This helps DEQ and the applicant determine whether the limits are necessary, and if they will accomplish the desired purpose. Provide supporting documentation (calculations, modeling assessment, regulatory review, etc.) for each limit requested.

DEQ AIR QUALITY PROGRAM
1410 N. Hilton, Boise, ID 83706
For assistance, call the
Air Permit Hotline – 1-877-5PERMIT

Emissions Unit - General **Form EU0**
Revision 4
08/28/08

Please see instructions on page 2 before filling out the form.

IDENTIFICATION

1. Company Name:	2. Facility Name:	3. Facility ID No:
Idahoan Foods, LLC	Idaho Falls Facility	019-00038

4. Brief Project Description:	Replacing Three Proctors with 2 Fluid Bed Dryers and Adding a Drum Dryer

EMISSIONS UNIT (PROCESS) IDENTIFICATION & DESCRIPTION

5.	Emissions Unit (EU) Name:	DRYER, FLAKER/DRUM TYPE # 2
6.	EU ID Number:	4
7.	EU Type:	☐ New Source ☐ Unpermitted Existing Source ☒ Modification to a Permitted Source -- Previous Permit #:T2-2009.0027 Date Issued: 5/9/2008
8.	Manufacturer:	BLAW KNOX
9.	Model:	
10..	Maximum Capacity:	0.43 TONS /HR FLAKE PRODUCTION
11.	Date of Construction:	1974
12.	Date of Modification (if any):	N/A
13.	Is this a Controlled Emission Unit?	☒ No ☐ Yes If Yes, complete the following section. If No, go to line 22.

EMISSIONS CONTROL EQUIPMENT

14. Control Equipment Name and ID:	
15. Date of Installation:	16. Date of Modification (if any):
17. Manufacturer and Model Number:	
18. ID(s) of Emission Unit Controlled:	
19. Is operating schedule different than emission units(s) involved?	☐ Yes ☐ No
20. Does the manufacturer guarantee the control efficiency of the control equipment?	☐ Yes ☐ No (If Yes, attach and label manufacturer guarantee)

	Pollutant Controlled					
	PM	PM10	SO_2	NOx	VOC	CO
Control Efficiency						

21. If manufacturer's data is not available, attach a separate sheet of paper to provide the control equipment design specifications and performance data to support the above mentioned control efficiency.

EMISSION UNIT OPERATING SCHEDULE (hours/day, hours/year, or other)

22.	Actual Operation:	8424
23.	Maximum Operation:	8760

REQUESTED LIMITS

24.	Are you requesting any permit limits?	☐ Yes ☒ No (If Yes, indicate all that apply below)
	☐ Operation Hour Limit(s):	
	☐ Production Limit(s):	
	☐ Material Usage Limit(s):	
	☐ Limits Based on Stack Testing:	Please attach all relevant stack testing summary reports
	☐ Other:	
25.	Rationale for Requesting the Limit(s):	

Instructions for Form EU0

This form provides DEQ with information about an emissions unit. An emissions unit is the equipment or process that generates emissions of regulated air pollutant(s). This form is used by the permit writer to become familiar with the emissions unit (EU). This form is also used by DEQ to identify the control equipment and the emission point (stack or vent) used for the emission unit(s) proposed in this permit application. This form also asks for supporting documents to verify stated control efficiencies and details about the emission point. Additional information may be requested.

1 - 4. Provide the same company name, facility name (if different), facility ID number, and brief project description as on Form CS in the boxes provided. This is useful in case any pages of the application get separated.

5. Provide the name of the emissions unit (EU), such as “Union boiler,” etc. A separate EU0 form is required for each emissions unit.

6. Provide the identification (ID) number of the EU. It can be any unique identifier you choose; however, this ID number should be unique to this EU and should be used consistently throughout this application and any other air quality permit application(s) (e.g., operating permit application) to identify this EU.

7. Indicate the type of EU by checking the appropriate box (e.g., a new source to be constructed, an unpermitted existing source (as-built) applying for the first time, or an existing permitted source to be modified). If the EU is being modified, indicate on the form the most recent permit issued for the EU.

8. Provide the manufacturer's name for the EU. If the EU is custom-designed or homemade, indicate so.

9. Provide the model number of the EU. If the EU is custom-designed or homemade, indicate so.

10. Provide the maximum capacity of the EU. For example, a boiler’s rated capacity may be modified in units of MMBtu/hr in terms of heat input of natural gas; an assembly line capacity may be in parts produced per day. Capacity should be based on a rated nameplate or as stated in the manufacturer’s literature.

11. The date of construction is the month, day, and year in which construction or modification was commenced.

Definitions:

Construction fabrication, erection, or installation of an affected facility.

Commenced an owner or operator has undertaken a continuous program of construction or modification or that an owner or operator has entered into a contractual obligation to undertake and complete, within a reasonable time, a continuous program of construction or modification.

Modification any physical change in, or change in the method of operation of, an existing facility which increases the amount of any air pollutant (to which a standard applies) emitted to the atmosphere by that facility or which results in the emission of any air pollutant (to which a standard applies) to the atmosphere not previously emitted.

12. If the EU has been or will be modified, provide the month, day, and year of the most recent or future modification as defined in IDAPA 58.01.01.006.

13. Indicate if emissions from the EU are controlled by air pollution control equipment. If the answer is yes, complete the next section. If the answer is no, go to line 18.

14. Provide the name of the air pollution control equipment (e.g., wet scrubber) and the control equipment’s identification number. This identification number should be unique to this air pollution control equipment and should be used consistently throughout this and all other air quality permit applications (e.g., operating permit application) to identify this air pollution control equipment.

15. Provide the date the air pollution control equipment was installed.

16. If the air pollution control equipment has been modified, provide the date of the modification.

17. Provide the name of the manufacturer and the model number for the air pollution control equipment.

18. If this air pollution control equipment controls emissions from more than this EU, provide the identification number(s) of the other EU(s).

19. Indicate if this air pollution control equipment operates on a schedule different from the EU(s) it controls.

20. Indicate if the air pollution control manufacturer guarantees the control efficiency of the control equipment. If the answer is yes, attach the manufacturer's guarantee and label it with the air pollution control equipment identification number. Indicate the control efficiency for the target pollutant(s).

21. If the control efficiency of the air pollution control equipment is not guaranteed, attach the design specifications and any performance data to support the control efficiency stated in part 16. Label the supporting documentation with the air pollution control equipment identification number.

22. Provide the projected actual operating schedule for the emission unit in hours/day, hours/year, or other.

23. Provide the maximum operating schedule for the emission unit in hours/day, hours/year, or other.

24. If you are requesting to have limits placed on this EU, mark "Yes." Then, check the applicable requested limit(s) and provide the limit(s). For example, production limits may be in terms of parts produced per year, material usage limits may be in gallons per day.

25. Please provide the reason you are requesting limits, if any. This helps DEQ and the applicant determine whether the limits are necessary, and if they will accomplish the desired purpose. Provide supporting documentation (calculations, modeling assessment, regulatory review, etc.) for each limit requested.

DEQ AIR QUALITY PROGRAM
1410 N. Hilton, Boise, ID 83706
For assistance, call the
Air Permit Hotline – 1-877-5PERMIT

Emissions Unit - General **Form EU0**
Revision 4
08/28/08

Please see instructions on page 2 before filling out the form.

IDENTIFICATION

1. Company Name:	2. Facility Name:	3. Facility ID No:
Idahoan Foods, LLC	Idaho Falls Facility	019-00038

4. Brief Project Description:	Replacing Three Proctors with 2 Fluid Bed Dryers and Adding a Drum Dryer

EMISSIONS UNIT (PROCESS) IDENTIFICATION & DESCRIPTION

5.	Emissions Unit (EU) Name:	DRYER, FLAKER/DRUM TYPE # 3
6.	EU ID Number:	5
7.	EU Type:	☐ New Source ☐ Unpermitted Existing Source ☒ Modification to a Permitted Source -- Previous Permit #:T2-2009.0027 Date Issued: 5/9/2008
8.	Manufacturer:	IDAHO STEEL
9.	Model:	
10..	Maximum Capacity:	0.82 TONS /HR FLAKE PRODUCTION
11.	Date of Construction:	2004
12.	Date of Modification (if any):	2011
13.	Is this a Controlled Emission Unit?	☒ No ☐ Yes If Yes, complete the following section. If No, go to line 22.

EMISSIONS CONTROL EQUIPMENT

14. Control Equipment Name and ID:	
15. Date of Installation:	16. Date of Modification (if any):
17. Manufacturer and Model Number:	
18. ID(s) of Emission Unit Controlled:	
19. Is operating schedule different than emission units(s) involved?	☐ Yes ☐ No
20. Does the manufacturer guarantee the control efficiency of the control equipment?	☐ Yes ☐ No (If Yes, attach and label manufacturer guarantee)

	Pollutant Controlled					
	PM	PM10	SO_2	NOx	VOC	CO
Control Efficiency						

21. If manufacturer's data is not available, attach a separate sheet of paper to provide the control equipment design specifications and performance data to support the above mentioned control efficiency.

EMISSION UNIT OPERATING SCHEDULE (hours/day, hours/year, or other)

22.	Actual Operation:	8424
23.	Maximum Operation:	8760

REQUESTED LIMITS

24.	Are you requesting any permit limits?	☐ Yes ☒ No (If Yes, indicate all that apply below)
	☐ Operation Hour Limit(s):	
	☐ Production Limit(s):	
	☐ Material Usage Limit(s):	
	☐ Limits Based on Stack Testing:	Please attach all relevant stack testing summary reports
	☐ Other:	
25.	Rationale for Requesting the Limit(s):	

Instructions for Form EU0

This form provides DEQ with information about an emissions unit. An emissions unit is the equipment or process that generates emissions of regulated air pollutant(s). This form is used by the permit writer to become familiar with the emissions unit (EU). This form is also used by DEQ to identify the control equipment and the emission point (stack or vent) used for the emission unit(s) proposed in this permit application. This form also asks for supporting documents to verify stated control efficiencies and details about the emission point. Additional information may be requested.

1 - 4. Provide the same company name, facility name (if different), facility ID number, and brief project description as on Form CS in the boxes provided. This is useful in case any pages of the application get separated.

5. Provide the name of the emissions unit (EU), such as “Union boiler,” etc. A separate EU0 form is required for each emissions unit.

6. Provide the identification (ID) number of the EU. It can be any unique identifier you choose; however, this ID number should be unique to this EU and should be used consistently throughout this application and any other air quality permit application(s) (e.g., operating permit application) to identify this EU.

7. Indicate the type of EU by checking the appropriate box (e.g., a new source to be constructed, an unpermitted existing source (as-built) applying for the first time, or an existing permitted source to be modified). If the EU is being modified, indicate on the form the most recent permit issued for the EU.

8. Provide the manufacturer's name for the EU. If the EU is custom-designed or homemade, indicate so.

9. Provide the model number of the EU. If the EU is custom-designed or homemade, indicate so.

10. Provide the maximum capacity of the EU. For example, a boiler’s rated capacity may be modified in units of MMBtu/hr in terms of heat input of natural gas; an assembly line capacity may be in parts produced per day. Capacity should be based on a rated nameplate or as stated in the manufacturer’s literature.

11. The date of construction is the month, day, and year in which construction or modification was commenced.

Definitions:

Construction fabrication, erection, or installation of an affected facility.

Commenced an owner or operator has undertaken a continuous program of construction or modification or that an owner or operator has entered into a contractual obligation to undertake and complete, within a reasonable time, a continuous program of construction or modification.

Modification any physical change in, or change in the method of operation of, an existing facility which increases the amount of any air pollutant (to which a standard applies) emitted to the atmosphere by that facility or which results in the emission of any air pollutant (to which a standard applies) to the atmosphere not previously emitted.

12. If the EU has been or will be modified, provide the month, day, and year of the most recent or future modification as defined in IDAPA 58.01.01.006.

13. Indicate if emissions from the EU are controlled by air pollution control equipment. If the answer is yes, complete the next section. If the answer is no, go to line 18.

14. Provide the name of the air pollution control equipment (e.g., wet scrubber) and the control equipment’s identification number. This identification number should be unique to this air pollution control equipment and should be used consistently throughout this and all other air quality permit applications (e.g., operating permit application) to identify this air pollution control equipment.

15. Provide the date the air pollution control equipment was installed.

16. If the air pollution control equipment has been modified, provide the date of the modification.

17. Provide the name of the manufacturer and the model number for the air pollution control equipment.

18. If this air pollution control equipment controls emissions from more than this EU, provide the identification number(s) of the other EU(s).

19. Indicate if this air pollution control equipment operates on a schedule different from the EU(s) it controls.

20. Indicate if the air pollution control manufacturer guarantees the control efficiency of the control equipment. If the answer is yes, attach the manufacturer's guarantee and label it with the air pollution control equipment identification number. Indicate the control efficiency for the target pollutant(s).

21. If the control efficiency of the air pollution control equipment is not guaranteed, attach the design specifications and any performance data to support the control efficiency stated in part 16. Label the supporting documentation with the air pollution control equipment identification number.

22. Provide the projected actual operating schedule for the emission unit in hours/day, hours/year, or other.

23. Provide the maximum operating schedule for the emission unit in hours/day, hours/year, or other.

24. If you are requesting to have limits placed on this EU, mark "Yes." Then, check the applicable requested limit(s) and provide the limit(s). For example, production limits may be in terms of parts produced per year, material usage limits may be in gallons per day.

25. Please provide the reason you are requesting limits, if any. This helps DEQ and the applicant determine whether the limits are necessary, and if they will accomplish the desired purpose. Provide supporting documentation (calculations, modeling assessment, regulatory review, etc.) for each limit requested.

DEQ AIR QUALITY PROGRAM
1410 N. Hilton, Boise, ID 83706
For assistance, call the
Air Permit Hotline – 1-877-5PERMIT

Emissions Unit - General **Form EU0**
Revision 4
08/28/08

Please see instructions on page 2 before filling out the form.

IDENTIFICATION

1. Company Name:	2. Facility Name:	3. Facility ID No:
Idahoan Foods, LLC	Idaho Falls Facility	019-00038

4. Brief Project Description:	Replacing Three Proctors with 2 Fluid Bed Dryers and Adding a Drum Dryer

EMISSIONS UNIT (PROCESS) IDENTIFICATION & DESCRIPTION

5.	Emissions Unit (EU) Name:	DRYER, FLAKER/DRUM TYPE # 4
6.	EU ID Number:	6
7.	EU Type:	☐ New Source ☐ Unpermitted Existing Source ☒ Modification to a Permitted Source -- Previous Permit #:T2-2009.0027 Date Issued: 5/9/2008
8.	Manufacturer:	IDAHO STEEL
9.	Model:	
10..	Maximum Capacity:	0.82 TONS /HR FLAKE PRODUCTION
11.	Date of Construction:	1985
12.	Date of Modification (if any):	2012
13.	Is this a Controlled Emission Unit?	☒ No ☐ Yes If Yes, complete the following section. If No, go to line 22.

EMISSIONS CONTROL EQUIPMENT

14. Control Equipment Name and ID:	
15. Date of Installation:	16. Date of Modification (if any):
17. Manufacturer and Model Number:	
18. ID(s) of Emission Unit Controlled:	
19. Is operating schedule different than emission units(s) involved?	☐ Yes ☐ No
20. Does the manufacturer guarantee the control efficiency of the control equipment?	☐ Yes ☐ No (If Yes, attach and label manufacturer guarantee)

	Pollutant Controlled					
	PM	PM10	SO_2	NOx	VOC	CO
Control Efficiency						

21. If manufacturer's data is not available, attach a separate sheet of paper to provide the control equipment design specifications and performance data to support the above mentioned control efficiency.

EMISSION UNIT OPERATING SCHEDULE (hours/day, hours/year, or other)

22.	Actual Operation:	8424
23.	Maximum Operation:	8760

REQUESTED LIMITS

24.	Are you requesting any permit limits?	☐ Yes ☒ No (If Yes, indicate all that apply below)
	☐ Operation Hour Limit(s):	
	☐ Production Limit(s):	
	☐ Material Usage Limit(s):	
	☐ Limits Based on Stack Testing:	Please attach all relevant stack testing summary reports
	☐ Other:	
25.	Rationale for Requesting the Limit(s):	

Instructions for Form EU0

This form provides DEQ with information about an emissions unit. An emissions unit is the equipment or process that generates emissions of regulated air pollutant(s). This form is used by the permit writer to become familiar with the emissions unit (EU). This form is also used by DEQ to identify the control equipment and the emission point (stack or vent) used for the emission unit(s) proposed in this permit application. This form also asks for supporting documents to verify stated control efficiencies and details about the emission point. Additional information may be requested.

1 - 4. Provide the same company name, facility name (if different), facility ID number, and brief project description as on Form CS in the boxes provided. This is useful in case any pages of the application get separated.

5. Provide the name of the emissions unit (EU), such as “Union boiler,” etc. A separate EU0 form is required for each emissions unit.

6. Provide the identification (ID) number of the EU. It can be any unique identifier you choose; however, this ID number should be unique to this EU and should be used consistently throughout this application and any other air quality permit application(s) (e.g., operating permit application) to identify this EU.

7. Indicate the type of EU by checking the appropriate box (e.g., a new source to be constructed, an unpermitted existing source (as-built) applying for the first time, or an existing permitted source to be modified). If the EU is being modified, indicate on the form the most recent permit issued for the EU.

8. Provide the manufacturer's name for the EU. If the EU is custom-designed or homemade, indicate so.

9. Provide the model number of the EU. If the EU is custom-designed or homemade, indicate so.

10. Provide the maximum capacity of the EU. For example, a boiler’s rated capacity may be modified in units of MMBtu/hr in terms of heat input of natural gas; an assembly line capacity may be in parts produced per day. Capacity should be based on a rated nameplate or as stated in the manufacturer’s literature.

11. The date of construction is the month, day, and year in which construction or modification was commenced.

Definitions:

Construction fabrication, erection, or installation of an affected facility.

Commenced an owner or operator has undertaken a continuous program of construction or modification or that an owner or operator has entered into a contractual obligation to undertake and complete, within a reasonable time, a continuous program of construction or modification.

Modification any physical change in, or change in the method of operation of, an existing facility which increases the amount of any air pollutant (to which a standard applies) emitted to the atmosphere by that facility or which results in the emission of any air pollutant (to which a standard applies) to the atmosphere not previously emitted.

12. If the EU has been or will be modified, provide the month, day, and year of the most recent or future modification as defined in IDAPA 58.01.01.006.

13. Indicate if emissions from the EU are controlled by air pollution control equipment. If the answer is yes, complete the next section. If the answer is no, go to line 18.

14. Provide the name of the air pollution control equipment (e.g., wet scrubber) and the control equipment’s identification number. This identification number should be unique to this air pollution control equipment and should be used consistently throughout this and all other air quality permit applications (e.g., operating permit application) to identify this air pollution control equipment.

15. Provide the date the air pollution control equipment was installed.

16. If the air pollution control equipment has been modified, provide the date of the modification.

17. Provide the name of the manufacturer and the model number for the air pollution control equipment.

18. If this air pollution control equipment controls emissions from more than this EU, provide the identification number(s) of the other EU(s).

19. Indicate if this air pollution control equipment operates on a schedule different from the EU(s) it controls.

20. Indicate if the air pollution control manufacturer guarantees the control efficiency of the control equipment. If the answer is yes, attach the manufacturer's guarantee and label it with the air pollution control equipment identification number. Indicate the control efficiency for the target pollutant(s).

21. If the control efficiency of the air pollution control equipment is not guaranteed, attach the design specifications and any performance data to support the control efficiency stated in part 16. Label the supporting documentation with the air pollution control equipment identification number.

22. Provide the projected actual operating schedule for the emission unit in hours/day, hours/year, or other.

23. Provide the maximum operating schedule for the emission unit in hours/day, hours/year, or other.

24. If you are requesting to have limits placed on this EU, mark "Yes." Then, check the applicable requested limit(s) and provide the limit(s). For example, production limits may be in terms of parts produced per year, material usage limits may be in gallons per day.

25. Please provide the reason you are requesting limits, if any. This helps DEQ and the applicant determine whether the limits are necessary, and if they will accomplish the desired purpose. Provide supporting documentation (calculations, modeling assessment, regulatory review, etc.) for each limit requested.

DEQ AIR QUALITY PROGRAM
1410 N. Hilton, Boise, ID 83706
For assistance, call the
Air Permit Hotline – 1-877-5PERMIT

Emissions Unit - General **Form EU0**
Revision 4
08/28/08

Please see instructions on page 2 before filling out the form.

IDENTIFICATION

1. Company Name:	2. Facility Name:	3. Facility ID No:
Idahoan Foods, LLC	Idaho Falls Facility	019-00038

4. Brief Project Description:	Replacing Three Proctors with 2 Fluid Bed Dryers and Adding a Drum Dryer

EMISSIONS UNIT (PROCESS) IDENTIFICATION & DESCRIPTION

5.	Emissions Unit (EU) Name:	FLAKER LINE 1&2 VACULIFT
6.	EU ID Number:	7
7.	EU Type:	☐ New Source ☐ Unpermitted Existing Source ☒ Modification to a Permitted Source -- Previous Permit #:T2-2009.0027 Date Issued: 5/9/2008
8.	Manufacturer:	VACULIFT
9.	Model:	N/A
10..	Maximum Capacity:	0.86 TONS /HR FLAKE PRODUCTION
11.	Date of Construction:	1981
12.	Date of Modification (if any):	
13.	Is this a Controlled Emission Unit?	☒ No ☐ Yes If Yes, complete the following section. If No, go to line 22.

EMISSIONS CONTROL EQUIPMENT

14. Control Equipment Name and ID:	
15. Date of Installation:	16. Date of Modification (if any):
17. Manufacturer and Model Number:	
18. ID(s) of Emission Unit Controlled:	
19. Is operating schedule different than emission units(s) involved?	☐ Yes ☐ No
20. Does the manufacturer guarantee the control efficiency of the control equipment?	☐ Yes ☐ No (If Yes, attach and label manufacturer guarantee)

	Pollutant Controlled					
	PM	PM10	SO_2	NOx	VOC	CO
Control Efficiency						

21. If manufacturer's data is not available, attach a separate sheet of paper to provide the control equipment design specifications and performance data to support the above mentioned control efficiency.

EMISSION UNIT OPERATING SCHEDULE (hours/day, hours/year, or other)

22.	Actual Operation:	8424
23.	Maximum Operation:	8760

REQUESTED LIMITS

24.	Are you requesting any permit limits?	☐ Yes ☒ No (If Yes, indicate all that apply below)
	☐ Operation Hour Limit(s):	
	☐ Production Limit(s):	
	☐ Material Usage Limit(s):	
	☐ Limits Based on Stack Testing:	Please attach all relevant stack testing summary reports
	☐ Other:	
25.	Rationale for Requesting the Limit(s):	

Instructions for Form EU0

This form provides DEQ with information about an emissions unit. An emissions unit is the equipment or process that generates emissions of regulated air pollutant(s). This form is used by the permit writer to become familiar with the emissions unit (EU). This form is also used by DEQ to identify the control equipment and the emission point (stack or vent) used for the emission unit(s) proposed in this permit application. This form also asks for supporting documents to verify stated control efficiencies and details about the emission point. Additional information may be requested.

1 - 4. Provide the same company name, facility name (if different), facility ID number, and brief project description as on Form CS in the boxes provided. This is useful in case any pages of the application get separated.

5. Provide the name of the emissions unit (EU), such as “Union boiler,” etc. A separate EU0 form is required for each emissions unit.

6. Provide the identification (ID) number of the EU. It can be any unique identifier you choose; however, this ID number should be unique to this EU and should be used consistently throughout this application and any other air quality permit application(s) (e.g., operating permit application) to identify this EU.

7. Indicate the type of EU by checking the appropriate box (e.g., a new source to be constructed, an unpermitted existing source (as-built) applying for the first time, or an existing permitted source to be modified). If the EU is being modified, indicate on the form the most recent permit issued for the EU.

8. Provide the manufacturer's name for the EU. If the EU is custom-designed or homemade, indicate so.

9. Provide the model number of the EU. If the EU is custom-designed or homemade, indicate so.

10. Provide the maximum capacity of the EU. For example, a boiler’s rated capacity may be modified in units of MMBtu/hr in terms of heat input of natural gas; an assembly line capacity may be in parts produced per day. Capacity should be based on a rated nameplate or as stated in the manufacturer’s literature.

11. The date of construction is the month, day, and year in which construction or modification was commenced.

Definitions:

Construction fabrication, erection, or installation of an affected facility.

Commenced an owner or operator has undertaken a continuous program of construction or modification or that an owner or operator has entered into a contractual obligation to undertake and complete, within a reasonable time, a continuous program of construction or modification.

Modification any physical change in, or change in the method of operation of, an existing facility which increases the amount of any air pollutant (to which a standard applies) emitted to the atmosphere by that facility or which results in the emission of any air pollutant (to which a standard applies) to the atmosphere not previously emitted.

12. If the EU has been or will be modified, provide the month, day, and year of the most recent or future modification as defined in IDAPA 58.01.01.006.

13. Indicate if emissions from the EU are controlled by air pollution control equipment. If the answer is yes, complete the next section. If the answer is no, go to line 18.

14. Provide the name of the air pollution control equipment (e.g., wet scrubber) and the control equipment’s identification number. This identification number should be unique to this air pollution control equipment and should be used consistently throughout this and all other air quality permit applications (e.g., operating permit application) to identify this air pollution control equipment.

15. Provide the date the air pollution control equipment was installed.

16. If the air pollution control equipment has been modified, provide the date of the modification.

17. Provide the name of the manufacturer and the model number for the air pollution control equipment.

18. If this air pollution control equipment controls emissions from more than this EU, provide the identification number(s) of the other EU(s).

19. Indicate if this air pollution control equipment operates on a schedule different from the EU(s) it controls.

20. Indicate if the air pollution control manufacturer guarantees the control efficiency of the control equipment. If the answer is yes, attach the manufacturer's guarantee and label it with the air pollution control equipment identification number. Indicate the control efficiency for the target pollutant(s).

21. If the control efficiency of the air pollution control equipment is not guaranteed, attach the design specifications and any performance data to support the control efficiency stated in part 16. Label the supporting documentation with the air pollution control equipment identification number.

22. Provide the projected actual operating schedule for the emission unit in hours/day, hours/year, or other.

23. Provide the maximum operating schedule for the emission unit in hours/day, hours/year, or other.

24. If you are requesting to have limits placed on this EU, mark "Yes." Then, check the applicable requested limit(s) and provide the limit(s). For example, production limits may be in terms of parts produced per year, material usage limits may be in gallons per day.

25. Please provide the reason you are requesting limits, if any. This helps DEQ and the applicant determine whether the limits are necessary, and if they will accomplish the desired purpose. Provide supporting documentation (calculations, modeling assessment, regulatory review, etc.) for each limit requested.

DEQ AIR QUALITY PROGRAM
1410 N. Hilton, Boise, ID 83706
For assistance, call the
Air Permit Hotline – 1-877-5PERMIT

Emissions Unit - General **Form EU0**
Revision 4
08/28/08

Please see instructions on page 2 before filling out the form.

IDENTIFICATION

1. Company Name:	2. Facility Name:	3. Facility ID No:
Idahoan Foods, LLC	Idaho Falls Facility	019-00038

4. Brief Project Description:	Replacing Three Proctors with 2 Fluid Bed Dryers and Adding a Drum Dryer

EMISSIONS UNIT (PROCESS) IDENTIFICATION & DESCRIPTION

5.	Emissions Unit (EU) Name:	FLAKER LINE 3 VACULIFT
6.	EU ID Number:	8
7.	EU Type:	☐ New Source ☐ Unpermitted Existing Source ☒ Modification to a Permitted Source -- Previous Permit #:T2-2009.0027 Date Issued: 5/9/2008
8.	Manufacturer:	VACULIFT
9.	Model:	N/A
10..	Maximum Capacity:	0.82 TONS /HR FLAKE PRODUCTION
11.	Date of Construction:	1995
12.	Date of Modification (if any):	2004
13.	Is this a Controlled Emission Unit?	☒ No ☐ Yes If Yes, complete the following section. If No, go to line 22.

EMISSIONS CONTROL EQUIPMENT

14. Control Equipment Name and ID:	
15. Date of Installation:	16. Date of Modification (if any):
17. Manufacturer and Model Number:	
18. ID(s) of Emission Unit Controlled:	
19. Is operating schedule different than emission units(s) involved?	☐ Yes ☐ No
20. Does the manufacturer guarantee the control efficiency of the control equipment?	☐ Yes ☐ No (If Yes, attach and label manufacturer guarantee)

	Pollutant Controlled					
	PM	PM10	SO_2	NOx	VOC	CO
Control Efficiency						

21. If manufacturer's data is not available, attach a separate sheet of paper to provide the control equipment design specifications and performance data to support the above mentioned control efficiency.

EMISSION UNIT OPERATING SCHEDULE (hours/day, hours/year, or other)

22.	Actual Operation:	8424
23.	Maximum Operation:	8760

REQUESTED LIMITS

24.	Are you requesting any permit limits?	☐ Yes ☒ No (If Yes, indicate all that apply below)
	☐ Operation Hour Limit(s):	
	☐ Production Limit(s):	
	☐ Material Usage Limit(s):	
	☐ Limits Based on Stack Testing:	Please attach all relevant stack testing summary reports
	☐ Other:	
25.	Rationale for Requesting the Limit(s):	

Instructions for Form EU0

This form provides DEQ with information about an emissions unit. An emissions unit is the equipment or process that generates emissions of regulated air pollutant(s). This form is used by the permit writer to become familiar with the emissions unit (EU). This form is also used by DEQ to identify the control equipment and the emission point (stack or vent) used for the emission unit(s) proposed in this permit application. This form also asks for supporting documents to verify stated control efficiencies and details about the emission point. Additional information may be requested.

1 - 4. Provide the same company name, facility name (if different), facility ID number, and brief project description as on Form CS in the boxes provided. This is useful in case any pages of the application get separated.

5. Provide the name of the emissions unit (EU), such as “Union boiler,” etc. A separate EU0 form is required for each emissions unit.

6. Provide the identification (ID) number of the EU. It can be any unique identifier you choose; however, this ID number should be unique to this EU and should be used consistently throughout this application and any other air quality permit application(s) (e.g., operating permit application) to identify this EU.

7. Indicate the type of EU by checking the appropriate box (e.g., a new source to be constructed, an unpermitted existing source (as-built) applying for the first time, or an existing permitted source to be modified). If the EU is being modified, indicate on the form the most recent permit issued for the EU.

8. Provide the manufacturer's name for the EU. If the EU is custom-designed or homemade, indicate so.

9. Provide the model number of the EU. If the EU is custom-designed or homemade, indicate so.

10. Provide the maximum capacity of the EU. For example, a boiler’s rated capacity may be modified in units of MMBtu/hr in terms of heat input of natural gas; an assembly line capacity may be in parts produced per day. Capacity should be based on a rated nameplate or as stated in the manufacturer’s literature.

11. The date of construction is the month, day, and year in which construction or modification was commenced.

Definitions:

Construction fabrication, erection, or installation of an affected facility.

Commenced an owner or operator has undertaken a continuous program of construction or modification or that an owner or operator has entered into a contractual obligation to undertake and complete, within a reasonable time, a continuous program of construction or modification.

Modification any physical change in, or change in the method of operation of, an existing facility which increases the amount of any air pollutant (to which a standard applies) emitted to the atmosphere by that facility or which results in the emission of any air pollutant (to which a standard applies) to the atmosphere not previously emitted.

12. If the EU has been or will be modified, provide the month, day, and year of the most recent or future modification as defined in IDAPA 58.01.01.006.

13. Indicate if emissions from the EU are controlled by air pollution control equipment. If the answer is yes, complete the next section. If the answer is no, go to line 18.

14. Provide the name of the air pollution control equipment (e.g., wet scrubber) and the control equipment’s identification number. This identification number should be unique to this air pollution control equipment and should be used consistently throughout this and all other air quality permit applications (e.g., operating permit application) to identify this air pollution control equipment.

15. Provide the date the air pollution control equipment was installed.

16. If the air pollution control equipment has been modified, provide the date of the modification.

17. Provide the name of the manufacturer and the model number for the air pollution control equipment.

18. If this air pollution control equipment controls emissions from more than this EU, provide the identification number(s) of the other EU(s).

19. Indicate if this air pollution control equipment operates on a schedule different from the EU(s) it controls.

20. Indicate if the air pollution control manufacturer guarantees the control efficiency of the control equipment. If the answer is yes, attach the manufacturer's guarantee and label it with the air pollution control equipment identification number. Indicate the control efficiency for the target pollutant(s).

21. If the control efficiency of the air pollution control equipment is not guaranteed, attach the design specifications and any performance data to support the control efficiency stated in part 16. Label the supporting documentation with the air pollution control equipment identification number.

22. Provide the projected actual operating schedule for the emission unit in hours/day, hours/year, or other.

23. Provide the maximum operating schedule for the emission unit in hours/day, hours/year, or other.

24. If you are requesting to have limits placed on this EU, mark "Yes." Then, check the applicable requested limit(s) and provide the limit(s). For example, production limits may be in terms of parts produced per year, material usage limits may be in gallons per day.

25. Please provide the reason you are requesting limits, if any. This helps DEQ and the applicant determine whether the limits are necessary, and if they will accomplish the desired purpose. Provide supporting documentation (calculations, modeling assessment, regulatory review, etc.) for each limit requested.

DEQ AIR QUALITY PROGRAM
1410 N. Hilton, Boise, ID 83706
For assistance, call the
Air Permit Hotline – 1-877-5PERMIT

Emissions Unit - General **Form EU0**
Revision 4
08/28/08

Please see instructions on page 2 before filling out the form.

IDENTIFICATION

1. Company Name:	2. Facility Name:	3. Facility ID No:
Idahoan Foods, LLC	Idaho Falls Facility	019-00038

4. Brief Project Description:	Replacing Three Proctors with 2 Fluid Bed Dryers and Adding a Drum Dryer

EMISSIONS UNIT (PROCESS) IDENTIFICATION & DESCRIPTION

5.	Emissions Unit (EU) Name:	FLAKER LINE 4 VACULIFT&BAGHOUSE
6.	EU ID Number:	9
7.	EU Type:	☐ New Source ☐ Unpermitted Existing Source ☒ Modification to a Permitted Source -- Previous Permit #:T2-2009.0027 Date Issued: 5/9/2008
8.	Manufacturer:	VACULIFT/SMME
9.	Model:	N/A
10..	Maximum Capacity:	0.82 TONS /HR FLAKE PRODUCTION
11.	Date of Construction:	1995
12.	Date of Modification (if any):	2012
13.	Is this a Controlled Emission Unit?	☒ No ☐ Yes If Yes, complete the following section. If No, go to line 22.

EMISSIONS CONTROL EQUIPMENT

14. Control Equipment Name and ID:	
15. Date of Installation:	16. Date of Modification (if any):
17. Manufacturer and Model Number:	
18. ID(s) of Emission Unit Controlled:	
19. Is operating schedule different than emission units(s) involved?	☐ Yes ☐ No
20. Does the manufacturer guarantee the control efficiency of the control equipment?	☐ Yes ☐ No (If Yes, attach and label manufacturer guarantee)

	Pollutant Controlled					
	PM	PM10	SO_2	NOx	VOC	CO
Control Efficiency						

21. If manufacturer's data is not available, attach a separate sheet of paper to provide the control equipment design specifications and performance data to support the above mentioned control efficiency.

EMISSION UNIT OPERATING SCHEDULE (hours/day, hours/year, or other)

22.	Actual Operation:	8424
23.	Maximum Operation:	8760

REQUESTED LIMITS

24.	Are you requesting any permit limits?	☐ Yes ☒ No (If Yes, indicate all that apply below)
	☐ Operation Hour Limit(s):	
	☐ Production Limit(s):	
	☐ Material Usage Limit(s):	
	☐ Limits Based on Stack Testing:	Please attach all relevant stack testing summary reports
	☐ Other:	
25.	Rationale for Requesting the Limit(s):	

Instructions for Form EU0

This form provides DEQ with information about an emissions unit. An emissions unit is the equipment or process that generates emissions of regulated air pollutant(s). This form is used by the permit writer to become familiar with the emissions unit (EU). This form is also used by DEQ to identify the control equipment and the emission point (stack or vent) used for the emission unit(s) proposed in this permit application. This form also asks for supporting documents to verify stated control efficiencies and details about the emission point. Additional information may be requested.

1 - 4. Provide the same company name, facility name (if different), facility ID number, and brief project description as on Form CS in the boxes provided. This is useful in case any pages of the application get separated.

5. Provide the name of the emissions unit (EU), such as “Union boiler,” etc. A separate EU0 form is required for each emissions unit.

6. Provide the identification (ID) number of the EU. It can be any unique identifier you choose; however, this ID number should be unique to this EU and should be used consistently throughout this application and any other air quality permit application(s) (e.g., operating permit application) to identify this EU.

7. Indicate the type of EU by checking the appropriate box (e.g., a new source to be constructed, an unpermitted existing source (as-built) applying for the first time, or an existing permitted source to be modified). If the EU is being modified, indicate on the form the most recent permit issued for the EU.

8. Provide the manufacturer's name for the EU. If the EU is custom-designed or homemade, indicate so.

9. Provide the model number of the EU. If the EU is custom-designed or homemade, indicate so.

10. Provide the maximum capacity of the EU. For example, a boiler’s rated capacity may be modified in units of MMBtu/hr in terms of heat input of natural gas; an assembly line capacity may be in parts produced per day. Capacity should be based on a rated nameplate or as stated in the manufacturer’s literature.

11. The date of construction is the month, day, and year in which construction or modification was commenced.

Definitions:

Construction fabrication, erection, or installation of an affected facility.

Commenced an owner or operator has undertaken a continuous program of construction or modification or that an owner or operator has entered into a contractual obligation to undertake and complete, within a reasonable time, a continuous program of construction or modification.

Modification any physical change in, or change in the method of operation of, an existing facility which increases the amount of any air pollutant (to which a standard applies) emitted to the atmosphere by that facility or which results in the emission of any air pollutant (to which a standard applies) to the atmosphere not previously emitted.

12. If the EU has been or will be modified, provide the month, day, and year of the most recent or future modification as defined in IDAPA 58.01.01.006.

13. Indicate if emissions from the EU are controlled by air pollution control equipment. If the answer is yes, complete the next section. If the answer is no, go to line 18.

14. Provide the name of the air pollution control equipment (e.g., wet scrubber) and the control equipment’s identification number. This identification number should be unique to this air pollution control equipment and should be used consistently throughout this and all other air quality permit applications (e.g., operating permit application) to identify this air pollution control equipment.

15. Provide the date the air pollution control equipment was installed.

16. If the air pollution control equipment has been modified, provide the date of the modification.

17. Provide the name of the manufacturer and the model number for the air pollution control equipment.

18. If this air pollution control equipment controls emissions from more than this EU, provide the identification number(s) of the other EU(s).

19. Indicate if this air pollution control equipment operates on a schedule different from the EU(s) it controls.

20. Indicate if the air pollution control manufacturer guarantees the control efficiency of the control equipment. If the answer is yes, attach the manufacturer's guarantee and label it with the air pollution control equipment identification number. Indicate the control efficiency for the target pollutant(s).

21. If the control efficiency of the air pollution control equipment is not guaranteed, attach the design specifications and any performance data to support the control efficiency stated in part 16. Label the supporting documentation with the air pollution control equipment identification number.

22. Provide the projected actual operating schedule for the emission unit in hours/day, hours/year, or other.

23. Provide the maximum operating schedule for the emission unit in hours/day, hours/year, or other.

24. If you are requesting to have limits placed on this EU, mark "Yes." Then, check the applicable requested limit(s) and provide the limit(s). For example, production limits may be in terms of parts produced per year, material usage limits may be in gallons per day.

25. Please provide the reason you are requesting limits, if any. This helps DEQ and the applicant determine whether the limits are necessary, and if they will accomplish the desired purpose. Provide supporting documentation (calculations, modeling assessment, regulatory review, etc.) for each limit requested.

DEQ AIR QUALITY PROGRAM
1410 N. Hilton, Boise, ID 83706
For assistance, call the
Air Permit Hotline – 1-877-5PERMIT

Emissions Unit - General **Form EU0**
Revision 4
08/28/08

Please see instructions on page 2 before filling out the form.

IDENTIFICATION

1. Company Name:	2. Facility Name:	3. Facility ID No:
Idahoan Foods, LLC	Idaho Falls Facility	019-00038

4. Brief Project Description:	Replacing Three Proctors with 2 Fluid Bed Dryers and Adding a Drum Dryer

EMISSIONS UNIT (PROCESS) IDENTIFICATION & DESCRIPTION

5.	Emissions Unit (EU) Name:	AIR MAKEUP UNIT #1 WASTE PLANT
6.	EU ID Number:	10
7.	EU Type:	☐ New Source ☐ Unpermitted Existing Source ☒ Modification to a Permitted Source -- Previous Permit #:T2-2009.0027 Date Issued: 5/9/2008
8.	Manufacturer:	UNKNOWN
9.	Model:	N/A
10..	Maximum Capacity:	2.5 Million BTU/HR
11.	Date of Construction:	1971
12.	Date of Modification (if any):	
13.	Is this a Controlled Emission Unit?	☒ No ☐ Yes If Yes, complete the following section. If No, go to line 22.

EMISSIONS CONTROL EQUIPMENT

14. Control Equipment Name and ID:	
15. Date of Installation:	16. Date of Modification (if any):
17. Manufacturer and Model Number:	
18. ID(s) of Emission Unit Controlled:	
19. Is operating schedule different than emission units(s) involved?	☐ Yes ☐ No
20. Does the manufacturer guarantee the control efficiency of the control equipment?	☐ Yes ☐ No (If Yes, attach and label manufacturer guarantee)

	Pollutant Controlled					
	PM	PM10	SO_2	NOx	VOC	CO
Control Efficiency						

21. If manufacturer's data is not available, attach a separate sheet of paper to provide the control equipment design specifications and performance data to support the above mentioned control efficiency.

EMISSION UNIT OPERATING SCHEDULE (hours/day, hours/year, or other)

22.	Actual Operation:	8424
23.	Maximum Operation:	8760

REQUESTED LIMITS

24.	Are you requesting any permit limits?	☐ Yes ☒ No (If Yes, indicate all that apply below)
	☐ Operation Hour Limit(s):	
	☐ Production Limit(s):	
	☐ Material Usage Limit(s):	
	☐ Limits Based on Stack Testing:	Please attach all relevant stack testing summary reports
	☐ Other:	
25.	Rationale for Requesting the Limit(s):	

Instructions for Form EU0

This form provides DEQ with information about an emissions unit. An emissions unit is the equipment or process that generates emissions of regulated air pollutant(s). This form is used by the permit writer to become familiar with the emissions unit (EU). This form is also used by DEQ to identify the control equipment and the emission point (stack or vent) used for the emission unit(s) proposed in this permit application. This form also asks for supporting documents to verify stated control efficiencies and details about the emission point. Additional information may be requested.

1 - 4. Provide the same company name, facility name (if different), facility ID number, and brief project description as on Form CS in the boxes provided. This is useful in case any pages of the application get separated.

5. Provide the name of the emissions unit (EU), such as “Union boiler,” etc. A separate EU0 form is required for each emissions unit.

6. Provide the identification (ID) number of the EU. It can be any unique identifier you choose; however, this ID number should be unique to this EU and should be used consistently throughout this application and any other air quality permit application(s) (e.g., operating permit application) to identify this EU.

7. Indicate the type of EU by checking the appropriate box (e.g., a new source to be constructed, an unpermitted existing source (as-built) applying for the first time, or an existing permitted source to be modified). If the EU is being modified, indicate on the form the most recent permit issued for the EU.

8. Provide the manufacturer's name for the EU. If the EU is custom-designed or homemade, indicate so.

9. Provide the model number of the EU. If the EU is custom-designed or homemade, indicate so.

10. Provide the maximum capacity of the EU. For example, a boiler’s rated capacity may be modified in units of MMBtu/hr in terms of heat input of natural gas; an assembly line capacity may be in parts produced per day. Capacity should be based on a rated nameplate or as stated in the manufacturer’s literature.

11. The date of construction is the month, day, and year in which construction or modification was commenced.

Definitions:

Construction fabrication, erection, or installation of an affected facility.

Commenced an owner or operator has undertaken a continuous program of construction or modification or that an owner or operator has entered into a contractual obligation to undertake and complete, within a reasonable time, a continuous program of construction or modification.

Modification any physical change in, or change in the method of operation of, an existing facility which increases the amount of any air pollutant (to which a standard applies) emitted to the atmosphere by that facility or which results in the emission of any air pollutant (to which a standard applies) to the atmosphere not previously emitted.

12. If the EU has been or will be modified, provide the month, day, and year of the most recent or future modification as defined in IDAPA 58.01.01.006.

13. Indicate if emissions from the EU are controlled by air pollution control equipment. If the answer is yes, complete the next section. If the answer is no, go to line 18.

14. Provide the name of the air pollution control equipment (e.g., wet scrubber) and the control equipment’s identification number. This identification number should be unique to this air pollution control equipment and should be used consistently throughout this and all other air quality permit applications (e.g., operating permit application) to identify this air pollution control equipment.

15. Provide the date the air pollution control equipment was installed.

16. If the air pollution control equipment has been modified, provide the date of the modification.

17. Provide the name of the manufacturer and the model number for the air pollution control equipment.

18. If this air pollution control equipment controls emissions from more than this EU, provide the identification number(s) of the other EU(s).

19. Indicate if this air pollution control equipment operates on a schedule different from the EU(s) it controls.

20. Indicate if the air pollution control manufacturer guarantees the control efficiency of the control equipment. If the answer is yes, attach the manufacturer's guarantee and label it with the air pollution control equipment identification number. Indicate the control efficiency for the target pollutant(s).

21. If the control efficiency of the air pollution control equipment is not guaranteed, attach the design specifications and any performance data to support the control efficiency stated in part 16. Label the supporting documentation with the air pollution control equipment identification number.

22. Provide the projected actual operating schedule for the emission unit in hours/day, hours/year, or other.

23. Provide the maximum operating schedule for the emission unit in hours/day, hours/year, or other.

24. If you are requesting to have limits placed on this EU, mark "Yes." Then, check the applicable requested limit(s) and provide the limit(s). For example, production limits may be in terms of parts produced per year, material usage limits may be in gallons per day.

25. Please provide the reason you are requesting limits, if any. This helps DEQ and the applicant determine whether the limits are necessary, and if they will accomplish the desired purpose. Provide supporting documentation (calculations, modeling assessment, regulatory review, etc.) for each limit requested.

DEQ AIR QUALITY PROGRAM
1410 N. Hilton, Boise, ID 83706
For assistance, call the
Air Permit Hotline – 1-877-5PERMIT

Emissions Unit - General **Form EU0**
Revision 4
08/28/08

Please see instructions on page 2 before filling out the form.

IDENTIFICATION

1. Company Name:	2. Facility Name:	3. Facility ID No:
Idahoan Foods, LLC	Idaho Falls Facility	019-00038

4. Brief Project Description:	Replacing Three Proctors with 2 Fluid Bed Dryers and Adding a Drum Dryer

EMISSIONS UNIT (PROCESS) IDENTIFICATION & DESCRIPTION

5.	Emissions Unit (EU) Name:	AIR MAKEUP UNIT #2 FLAKER ROOM
6.	EU ID Number:	11
7.	EU Type:	☐ New Source ☐ Unpermitted Existing Source ☒ Modification to a Permitted Source -- Previous Permit #:T2-2009.0027 Date Issued: 5/9/2008
8.	Manufacturer:	UNKNOWN
9.	Model:	N/A
10..	Maximum Capacity:	2.5 Million BTU/HR
11.	Date of Construction:	1971
12.	Date of Modification (if any):	
13.	Is this a Controlled Emission Unit?	☒ No ☐ Yes If Yes, complete the following section. If No, go to line 22.

EMISSIONS CONTROL EQUIPMENT

14. Control Equipment Name and ID:	
15. Date of Installation:	16. Date of Modification (if any):
17. Manufacturer and Model Number:	
18. ID(s) of Emission Unit Controlled:	
19. Is operating schedule different than emission units(s) involved?	☐ Yes ☐ No
20. Does the manufacturer guarantee the control efficiency of the control equipment?	☐ Yes ☐ No (If Yes, attach and label manufacturer guarantee)

	Pollutant Controlled					
	PM	PM10	SO_2	NOx	VOC	CO
Control Efficiency						

21. If manufacturer's data is not available, attach a separate sheet of paper to provide the control equipment design specifications and performance data to support the above mentioned control efficiency.

EMISSION UNIT OPERATING SCHEDULE (hours/day, hours/year, or other)

22.	Actual Operation:	8424
23.	Maximum Operation:	8760

REQUESTED LIMITS

24.	Are you requesting any permit limits?	☐ Yes ☒ No (If Yes, indicate all that apply below)
	☐ Operation Hour Limit(s):	
	☐ Production Limit(s):	
	☐ Material Usage Limit(s):	
	☐ Limits Based on Stack Testing:	Please attach all relevant stack testing summary reports
	☐ Other:	
25.	Rationale for Requesting the Limit(s):	

Instructions for Form EU0

This form provides DEQ with information about an emissions unit. An emissions unit is the equipment or process that generates emissions of regulated air pollutant(s). This form is used by the permit writer to become familiar with the emissions unit (EU). This form is also used by DEQ to identify the control equipment and the emission point (stack or vent) used for the emission unit(s) proposed in this permit application. This form also asks for supporting documents to verify stated control efficiencies and details about the emission point. Additional information may be requested.

1 - 4. Provide the same company name, facility name (if different), facility ID number, and brief project description as on Form CS in the boxes provided. This is useful in case any pages of the application get separated.

5. Provide the name of the emissions unit (EU), such as “Union boiler,” etc. A separate EU0 form is required for each emissions unit.

6. Provide the identification (ID) number of the EU. It can be any unique identifier you choose; however, this ID number should be unique to this EU and should be used consistently throughout this application and any other air quality permit application(s) (e.g., operating permit application) to identify this EU.

7. Indicate the type of EU by checking the appropriate box (e.g., a new source to be constructed, an unpermitted existing source (as-built) applying for the first time, or an existing permitted source to be modified). If the EU is being modified, indicate on the form the most recent permit issued for the EU.

8. Provide the manufacturer's name for the EU. If the EU is custom-designed or homemade, indicate so.

9. Provide the model number of the EU. If the EU is custom-designed or homemade, indicate so.

10. Provide the maximum capacity of the EU. For example, a boiler’s rated capacity may be modified in units of MMBtu/hr in terms of heat input of natural gas; an assembly line capacity may be in parts produced per day. Capacity should be based on a rated nameplate or as stated in the manufacturer’s literature.

11. The date of construction is the month, day, and year in which construction or modification was commenced.

Definitions:

Construction fabrication, erection, or installation of an affected facility.

Commenced an owner or operator has undertaken a continuous program of construction or modification or that an owner or operator has entered into a contractual obligation to undertake and complete, within a reasonable time, a continuous program of construction or modification.

Modification any physical change in, or change in the method of operation of, an existing facility which increases the amount of any air pollutant (to which a standard applies) emitted to the atmosphere by that facility or which results in the emission of any air pollutant (to which a standard applies) to the atmosphere not previously emitted.

12. If the EU has been or will be modified, provide the month, day, and year of the most recent or future modification as defined in IDAPA 58.01.01.006.

13. Indicate if emissions from the EU are controlled by air pollution control equipment. If the answer is yes, complete the next section. If the answer is no, go to line 18.

14. Provide the name of the air pollution control equipment (e.g., wet scrubber) and the control equipment’s identification number. This identification number should be unique to this air pollution control equipment and should be used consistently throughout this and all other air quality permit applications (e.g., operating permit application) to identify this air pollution control equipment.

15. Provide the date the air pollution control equipment was installed.

16. If the air pollution control equipment has been modified, provide the date of the modification.

17. Provide the name of the manufacturer and the model number for the air pollution control equipment.

18. If this air pollution control equipment controls emissions from more than this EU, provide the identification number(s) of the other EU(s).

19. Indicate if this air pollution control equipment operates on a schedule different from the EU(s) it controls.

20. Indicate if the air pollution control manufacturer guarantees the control efficiency of the control equipment. If the answer is yes, attach the manufacturer's guarantee and label it with the air pollution control equipment identification number. Indicate the control efficiency for the target pollutant(s).

21. If the control efficiency of the air pollution control equipment is not guaranteed, attach the design specifications and any performance data to support the control efficiency stated in part 16. Label the supporting documentation with the air pollution control equipment identification number.

22. Provide the projected actual operating schedule for the emission unit in hours/day, hours/year, or other.

23. Provide the maximum operating schedule for the emission unit in hours/day, hours/year, or other.

24. If you are requesting to have limits placed on this EU, mark "Yes." Then, check the applicable requested limit(s) and provide the limit(s). For example, production limits may be in terms of parts produced per year, material usage limits may be in gallons per day.

25. Please provide the reason you are requesting limits, if any. This helps DEQ and the applicant determine whether the limits are necessary, and if they will accomplish the desired purpose. Provide supporting documentation (calculations, modeling assessment, regulatory review, etc.) for each limit requested.

DEQ AIR QUALITY PROGRAM
1410 N. Hilton, Boise, ID 83706
For assistance, call the
Air Permit Hotline – 1-877-5PERMIT

Emissions Unit - General **Form EU0**
Revision 4
08/28/08

Please see instructions on page 2 before filling out the form.

IDENTIFICATION

1. Company Name:	2. Facility Name:	3. Facility ID No:
Idahoan Foods, LLC	Idaho Falls Facility	019-00038

4. Brief Project Description:	Replacing Three Proctors with 2 Fluid Bed Dryers and Adding a Drum Dryer

EMISSIONS UNIT (PROCESS) IDENTIFICATION & DESCRIPTION

5.	Emissions Unit (EU) Name:	AIR MAKEUP UNIT #3 BAG ROOM
6.	EU ID Number:	12
7.	EU Type:	☐ New Source ☐ Unpermitted Existing Source ☒ Modification to a Permitted Source -- Previous Permit #:T2-2009.0027 Date Issued: 5/9/2008
8.	Manufacturer:	UNKNOWN
9.	Model:	N/A
10..	Maximum Capacity:	5 Million BTU/HR
11.	Date of Construction:	1971
12.	Date of Modification (if any):	
13.	Is this a Controlled Emission Unit?	☒ No ☐ Yes If Yes, complete the following section. If No, go to line 22.

EMISSIONS CONTROL EQUIPMENT

14. Control Equipment Name and ID:	
15. Date of Installation:	16. Date of Modification (if any):
17. Manufacturer and Model Number:	
18. ID(s) of Emission Unit Controlled:	
19. Is operating schedule different than emission units(s) involved?	☐ Yes ☐ No
20. Does the manufacturer guarantee the control efficiency of the control equipment?	☐ Yes ☐ No (If Yes, attach and label manufacturer guarantee)

	Pollutant Controlled					
	PM	PM10	SO_2	NOx	VOC	CO
Control Efficiency						

21. If manufacturer's data is not available, attach a separate sheet of paper to provide the control equipment design specifications and performance data to support the above mentioned control efficiency.

EMISSION UNIT OPERATING SCHEDULE (hours/day, hours/year, or other)

22.	Actual Operation:	8424
23.	Maximum Operation:	8760

REQUESTED LIMITS

24.	Are you requesting any permit limits?	☐ Yes ☒ No (If Yes, indicate all that apply below)
	☐ Operation Hour Limit(s):	
	☐ Production Limit(s):	
	☐ Material Usage Limit(s):	
	☐ Limits Based on Stack Testing:	Please attach all relevant stack testing summary reports
	☐ Other:	
25.	Rationale for Requesting the Limit(s):	

Instructions for Form EU0

This form provides DEQ with information about an emissions unit. An emissions unit is the equipment or process that generates emissions of regulated air pollutant(s). This form is used by the permit writer to become familiar with the emissions unit (EU). This form is also used by DEQ to identify the control equipment and the emission point (stack or vent) used for the emission unit(s) proposed in this permit application. This form also asks for supporting documents to verify stated control efficiencies and details about the emission point. Additional information may be requested.

1 - 4. Provide the same company name, facility name (if different), facility ID number, and brief project description as on Form CS in the boxes provided. This is useful in case any pages of the application get separated.

5. Provide the name of the emissions unit (EU), such as “Union boiler,” etc. A separate EU0 form is required for each emissions unit.

6. Provide the identification (ID) number of the EU. It can be any unique identifier you choose; however, this ID number should be unique to this EU and should be used consistently throughout this application and any other air quality permit application(s) (e.g., operating permit application) to identify this EU.

7. Indicate the type of EU by checking the appropriate box (e.g., a new source to be constructed, an unpermitted existing source (as-built) applying for the first time, or an existing permitted source to be modified). If the EU is being modified, indicate on the form the most recent permit issued for the EU.

8. Provide the manufacturer's name for the EU. If the EU is custom-designed or homemade, indicate so.

9. Provide the model number of the EU. If the EU is custom-designed or homemade, indicate so.

10. Provide the maximum capacity of the EU. For example, a boiler’s rated capacity may be modified in units of MMBtu/hr in terms of heat input of natural gas; an assembly line capacity may be in parts produced per day. Capacity should be based on a rated nameplate or as stated in the manufacturer’s literature.

11. The date of construction is the month, day, and year in which construction or modification was commenced.

Definitions:

Construction fabrication, erection, or installation of an affected facility.

Commenced an owner or operator has undertaken a continuous program of construction or modification or that an owner or operator has entered into a contractual obligation to undertake and complete, within a reasonable time, a continuous program of construction or modification.

Modification any physical change in, or change in the method of operation of, an existing facility which increases the amount of any air pollutant (to which a standard applies) emitted to the atmosphere by that facility or which results in the emission of any air pollutant (to which a standard applies) to the atmosphere not previously emitted.

12. If the EU has been or will be modified, provide the month, day, and year of the most recent or future modification as defined in IDAPA 58.01.01.006.

13. Indicate if emissions from the EU are controlled by air pollution control equipment. If the answer is yes, complete the next section. If the answer is no, go to line 18.

14. Provide the name of the air pollution control equipment (e.g., wet scrubber) and the control equipment’s identification number. This identification number should be unique to this air pollution control equipment and should be used consistently throughout this and all other air quality permit applications (e.g., operating permit application) to identify this air pollution control equipment.

15. Provide the date the air pollution control equipment was installed.

16. If the air pollution control equipment has been modified, provide the date of the modification.

17. Provide the name of the manufacturer and the model number for the air pollution control equipment.

18. If this air pollution control equipment controls emissions from more than this EU, provide the identification number(s) of the other EU(s).

19. Indicate if this air pollution control equipment operates on a schedule different from the EU(s) it controls.

20. Indicate if the air pollution control manufacturer guarantees the control efficiency of the control equipment. If the answer is yes, attach the manufacturer's guarantee and label it with the air pollution control equipment identification number. Indicate the control efficiency for the target pollutant(s).

21. If the control efficiency of the air pollution control equipment is not guaranteed, attach the design specifications and any performance data to support the control efficiency stated in part 16. Label the supporting documentation with the air pollution control equipment identification number.

22. Provide the projected actual operating schedule for the emission unit in hours/day, hours/year, or other.

23. Provide the maximum operating schedule for the emission unit in hours/day, hours/year, or other.

24. If you are requesting to have limits placed on this EU, mark "Yes." Then, check the applicable requested limit(s) and provide the limit(s). For example, production limits may be in terms of parts produced per year, material usage limits may be in gallons per day.

25. Please provide the reason you are requesting limits, if any. This helps DEQ and the applicant determine whether the limits are necessary, and if they will accomplish the desired purpose. Provide supporting documentation (calculations, modeling assessment, regulatory review, etc.) for each limit requested.

DEQ AIR QUALITY PROGRAM
1410 N. Hilton, Boise, ID 83706
For assistance, call the
Air Permit Hotline – 1-877-5PERMIT

Emissions Unit - General **Form EU0**
Revision 4
08/28/08

Please see instructions on page 2 before filling out the form.

IDENTIFICATION

1. Company Name:	2. Facility Name:	3. Facility ID No:
Idahoan Foods, LLC	Idaho Falls Facility	019-00038

4. Brief Project Description:	Replacing Three Proctors with 2 Fluid Bed Dryers and Adding a Drum Dryer

EMISSIONS UNIT (PROCESS) IDENTIFICATION & DESCRIPTION

5.	Emissions Unit (EU) Name:	AIR MAKEUP UNIT #4 WAREHOUSE
6.	EU ID Number:	13
7.	EU Type:	☒ New Source ☐ Unpermitted Existing Source ☐ Modification to a Permitted Source -- Previous Permit #:T2-2009.0027 Date Issued: 5/9/2008
8.	Manufacturer:	RAYCO
9.	Model:	GAS PAC 500
10..	Maximum Capacity:	5.5 MILLION BTU/HR
11.	Date of Construction:	2012
12.	Date of Modification (if any):	NA
13.	Is this a Controlled Emission Unit?	☒ No ☐ Yes If Yes, complete the following section. If No, go to line 22.

EMISSIONS CONTROL EQUIPMENT

14. Control Equipment Name and ID:	
15. Date of Installation:	16. Date of Modification (if any):
17. Manufacturer and Model Number:	
18. ID(s) of Emission Unit Controlled:	
19. Is operating schedule different than emission units(s) involved?	☐ Yes ☐ No
20. Does the manufacturer guarantee the control efficiency of the control equipment?	☐ Yes ☐ No (If Yes, attach and label manufacturer guarantee)

	Pollutant Controlled					
	PM	PM10	SO_2	NOx	VOC	CO
Control Efficiency						

21. If manufacturer's data is not available, attach a separate sheet of paper to provide the control equipment design specifications and performance data to support the above mentioned control efficiency.

EMISSION UNIT OPERATING SCHEDULE (hours/day, hours/year, or other)

22.	Actual Operation:	8424
23.	Maximum Operation:	8760

REQUESTED LIMITS

24.	Are you requesting any permit limits?	☐ Yes ☒ No (If Yes, indicate all that apply below)
	☐ Operation Hour Limit(s):	
	☐ Production Limit(s):	
	☐ Material Usage Limit(s):	
	☐ Limits Based on Stack Testing:	Please attach all relevant stack testing summary reports
	☐ Other:	
25.	Rationale for Requesting the Limit(s):	

Instructions for Form EU0

This form provides DEQ with information about an emissions unit. An emissions unit is the equipment or process that generates emissions of regulated air pollutant(s). This form is used by the permit writer to become familiar with the emissions unit (EU). This form is also used by DEQ to identify the control equipment and the emission point (stack or vent) used for the emission unit(s) proposed in this permit application. This form also asks for supporting documents to verify stated control efficiencies and details about the emission point. Additional information may be requested.

1 - 4. Provide the same company name, facility name (if different), facility ID number, and brief project description as on Form CS in the boxes provided. This is useful in case any pages of the application get separated.

5. Provide the name of the emissions unit (EU), such as “Union boiler,” etc. A separate EU0 form is required for each emissions unit.

6. Provide the identification (ID) number of the EU. It can be any unique identifier you choose; however, this ID number should be unique to this EU and should be used consistently throughout this application and any other air quality permit application(s) (e.g., operating permit application) to identify this EU.

7. Indicate the type of EU by checking the appropriate box (e.g., a new source to be constructed, an unpermitted existing source (as-built) applying for the first time, or an existing permitted source to be modified). If the EU is being modified, indicate on the form the most recent permit issued for the EU.

8. Provide the manufacturer's name for the EU. If the EU is custom-designed or homemade, indicate so.

9. Provide the model number of the EU. If the EU is custom-designed or homemade, indicate so.

10. Provide the maximum capacity of the EU. For example, a boiler’s rated capacity may be modified in units of MMBtu/hr in terms of heat input of natural gas; an assembly line capacity may be in parts produced per day. Capacity should be based on a rated nameplate or as stated in the manufacturer’s literature.

11. The date of construction is the month, day, and year in which construction or modification was commenced.

Definitions:

Construction fabrication, erection, or installation of an affected facility.

Commenced an owner or operator has undertaken a continuous program of construction or modification or that an owner or operator has entered into a contractual obligation to undertake and complete, within a reasonable time, a continuous program of construction or modification.

Modification any physical change in, or change in the method of operation of, an existing facility which increases the amount of any air pollutant (to which a standard applies) emitted to the atmosphere by that facility or which results in the emission of any air pollutant (to which a standard applies) to the atmosphere not previously emitted.

12. If the EU has been or will be modified, provide the month, day, and year of the most recent or future modification as defined in IDAPA 58.01.01.006.

13. Indicate if emissions from the EU are controlled by air pollution control equipment. If the answer is yes, complete the next section. If the answer is no, go to line 18.

14. Provide the name of the air pollution control equipment (e.g., wet scrubber) and the control equipment’s identification number. This identification number should be unique to this air pollution control equipment and should be used consistently throughout this and all other air quality permit applications (e.g., operating permit application) to identify this air pollution control equipment.

15. Provide the date the air pollution control equipment was installed.

16. If the air pollution control equipment has been modified, provide the date of the modification.

17. Provide the name of the manufacturer and the model number for the air pollution control equipment.

18. If this air pollution control equipment controls emissions from more than this EU, provide the identification number(s) of the other EU(s).

19. Indicate if this air pollution control equipment operates on a schedule different from the EU(s) it controls.

20. Indicate if the air pollution control manufacturer guarantees the control efficiency of the control equipment. If the answer is yes, attach the manufacturer's guarantee and label it with the air pollution control equipment identification number. Indicate the control efficiency for the target pollutant(s).

21. If the control efficiency of the air pollution control equipment is not guaranteed, attach the design specifications and any performance data to support the control efficiency stated in part 16. Label the supporting documentation with the air pollution control equipment identification number.

22. Provide the projected actual operating schedule for the emission unit in hours/day, hours/year, or other.

23. Provide the maximum operating schedule for the emission unit in hours/day, hours/year, or other.

24. If you are requesting to have limits placed on this EU, mark "Yes." Then, check the applicable requested limit(s) and provide the limit(s). For example, production limits may be in terms of parts produced per year, material usage limits may be in gallons per day.

25. Please provide the reason you are requesting limits, if any. This helps DEQ and the applicant determine whether the limits are necessary, and if they will accomplish the desired purpose. Provide supporting documentation (calculations, modeling assessment, regulatory review, etc.) for each limit requested.

DEQ AIR QUALITY PROGRAM
1410 N. Hilton, Boise, ID 83706
For assistance, call the
Air Permit Hotline – 1-877-5PERMIT

Emissions Unit - General **Form EU0**
Revision 4
08/28/08

Please see instructions on page 2 before filling out the form.

IDENTIFICATION

1. Company Name:	2. Facility Name:	3. Facility ID No:
Idahoan Foods, LLC	Idaho Falls Facility	019-00038

4. Brief Project Description:	Replacing Three Proctors with 2 Fluid Bed Dryers and Adding a Drum Dryer

EMISSIONS UNIT (PROCESS) IDENTIFICATION & DESCRIPTION

5.	Emissions Unit (EU) Name:	BAG HOUSE, DAY TANK "A", REAL LINE
6.	EU ID Number:	14
7.	EU Type:	☒ New Source ☐ Unpermitted Existing Source ☐ Modification to a Permitted Source -- Previous Permit #:T2-2009.0027 Date Issued: 5/9/2008
8.	Manufacturer:	KRON
9.	Model:	F15214-174M
10..	Maximum Capacity:	3.75 Ton/Hr
11.	Date of Construction:	2012
12.	Date of Modification (if any):	NA
13.	Is this a Controlled Emission Unit?	☒ No ☐ Yes If Yes, complete the following section. If No, go to line 22.

EMISSIONS CONTROL EQUIPMENT

14. Control Equipment Name and ID:	
15. Date of Installation:	16. Date of Modification (if any):
17. Manufacturer and Model Number:	
18. ID(s) of Emission Unit Controlled:	
19. Is operating schedule different than emission units(s) involved?	☐ Yes ☐ No
20. Does the manufacturer guarantee the control efficiency of the control equipment?	☐ Yes ☐ No (If Yes, attach and label manufacturer guarantee)

	Pollutant Controlled					
	PM	PM10	SO_2	NOx	VOC	CO
Control Efficiency						

21. If manufacturer's data is not available, attach a separate sheet of paper to provide the control equipment design specifications and performance data to support the above mentioned control efficiency.

EMISSION UNIT OPERATING SCHEDULE (hours/day, hours/year, or other)

22.	Actual Operation:	8424
23.	Maximum Operation:	8760

REQUESTED LIMITS

24.	Are you requesting any permit limits?	☐ Yes ☒ No (If Yes, indicate all that apply below)
	☐ Operation Hour Limit(s):	
	☐ Production Limit(s):	
	☐ Material Usage Limit(s):	
	☐ Limits Based on Stack Testing:	Please attach all relevant stack testing summary reports
	☐ Other:	
25.	Rationale for Requesting the Limit(s):	

Instructions for Form EU0

This form provides DEQ with information about an emissions unit. An emissions unit is the equipment or process that generates emissions of regulated air pollutant(s). This form is used by the permit writer to become familiar with the emissions unit (EU). This form is also used by DEQ to identify the control equipment and the emission point (stack or vent) used for the emission unit(s) proposed in this permit application. This form also asks for supporting documents to verify stated control efficiencies and details about the emission point. Additional information may be requested.

1 - 4. Provide the same company name, facility name (if different), facility ID number, and brief project description as on Form CS in the boxes provided. This is useful in case any pages of the application get separated.

5. Provide the name of the emissions unit (EU), such as “Union boiler,” etc. A separate EU0 form is required for each emissions unit.

6. Provide the identification (ID) number of the EU. It can be any unique identifier you choose; however, this ID number should be unique to this EU and should be used consistently throughout this application and any other air quality permit application(s) (e.g., operating permit application) to identify this EU.

7. Indicate the type of EU by checking the appropriate box (e.g., a new source to be constructed, an unpermitted existing source (as-built) applying for the first time, or an existing permitted source to be modified). If the EU is being modified, indicate on the form the most recent permit issued for the EU.

8. Provide the manufacturer's name for the EU. If the EU is custom-designed or homemade, indicate so.

9. Provide the model number of the EU. If the EU is custom-designed or homemade, indicate so.

10. Provide the maximum capacity of the EU. For example, a boiler’s rated capacity may be modified in units of MMBtu/hr in terms of heat input of natural gas; an assembly line capacity may be in parts produced per day. Capacity should be based on a rated nameplate or as stated in the manufacturer’s literature.

11. The date of construction is the month, day, and year in which construction or modification was commenced.

Definitions:

Construction fabrication, erection, or installation of an affected facility.

Commenced an owner or operator has undertaken a continuous program of construction or modification or that an owner or operator has entered into a contractual obligation to undertake and complete, within a reasonable time, a continuous program of construction or modification.

Modification any physical change in, or change in the method of operation of, an existing facility which increases the amount of any air pollutant (to which a standard applies) emitted to the atmosphere by that facility or which results in the emission of any air pollutant (to which a standard applies) to the atmosphere not previously emitted.

12. If the EU has been or will be modified, provide the month, day, and year of the most recent or future modification as defined in IDAPA 58.01.01.006.

13. Indicate if emissions from the EU are controlled by air pollution control equipment. If the answer is yes, complete the next section. If the answer is no, go to line 18.

14. Provide the name of the air pollution control equipment (e.g., wet scrubber) and the control equipment’s identification number. This identification number should be unique to this air pollution control equipment and should be used consistently throughout this and all other air quality permit applications (e.g., operating permit application) to identify this air pollution control equipment.

15. Provide the date the air pollution control equipment was installed.

16. If the air pollution control equipment has been modified, provide the date of the modification.

17. Provide the name of the manufacturer and the model number for the air pollution control equipment.

18. If this air pollution control equipment controls emissions from more than this EU, provide the identification number(s) of the other EU(s).

19. Indicate if this air pollution control equipment operates on a schedule different from the EU(s) it controls.

20. Indicate if the air pollution control manufacturer guarantees the control efficiency of the control equipment. If the answer is yes, attach the manufacturer's guarantee and label it with the air pollution control equipment identification number. Indicate the control efficiency for the target pollutant(s).

21. If the control efficiency of the air pollution control equipment is not guaranteed, attach the design specifications and any performance data to support the control efficiency stated in part 16. Label the supporting documentation with the air pollution control equipment identification number.

22. Provide the projected actual operating schedule for the emission unit in hours/day, hours/year, or other.

23. Provide the maximum operating schedule for the emission unit in hours/day, hours/year, or other.

24. If you are requesting to have limits placed on this EU, mark "Yes." Then, check the applicable requested limit(s) and provide the limit(s). For example, production limits may be in terms of parts produced per year, material usage limits may be in gallons per day.

25. Please provide the reason you are requesting limits, if any. This helps DEQ and the applicant determine whether the limits are necessary, and if they will accomplish the desired purpose. Provide supporting documentation (calculations, modeling assessment, regulatory review, etc.) for each limit requested.

DEQ AIR QUALITY PROGRAM
1410 N. Hilton, Boise, ID 83706
For assistance, call the
Air Permit Hotline – 1-877-5PERMIT

Emissions Unit - General **Form EU0**
Revision 4
08/28/08

Please see instructions on page 2 before filling out the form.

IDENTIFICATION

1. Company Name:	2. Facility Name:	3. Facility ID No:
Idahoan Foods, LLC	Idaho Falls Facility	019-00038

4. Brief Project Description:	Replacing Three Proctors with 2 Fluid Bed Dryers and Adding a Drum Dryer

EMISSIONS UNIT (PROCESS) IDENTIFICATION & DESCRIPTION

5.	Emissions Unit (EU) Name:	BAG HOUSE, DAY TANK "B", REAL LINE
6.	EU ID Number:	15
7.	EU Type:	☒ New Source ☐ Unpermitted Existing Source ☐ Modification to a Permitted Source -- Previous Permit #:T2-2009.0027 Date Issued: 5/9/2008
8.	Manufacturer:	KTRON
9.	Model:	F15214-174M
10..	Maximum Capacity:	3.75 T/hr
11.	Date of Construction:	2012
12.	Date of Modification (if any):	NA
13.	Is this a Controlled Emission Unit?	☒ No ☐ Yes If Yes, complete the following section. If No, go to line 22.

EMISSIONS CONTROL EQUIPMENT

14. Control Equipment Name and ID:	
15. Date of Installation:	16. Date of Modification (if any):
17. Manufacturer and Model Number:	
18. ID(s) of Emission Unit Controlled:	
19. Is operating schedule different than emission units(s) involved?	☐ Yes ☐ No
20. Does the manufacturer guarantee the control efficiency of the control equipment?	☐ Yes ☐ No (If Yes, attach and label manufacturer guarantee)

	Pollutant Controlled					
	PM	PM10	SO_2	NOx	VOC	CO
Control Efficiency						

21. If manufacturer's data is not available, attach a separate sheet of paper to provide the control equipment design specifications and performance data to support the above mentioned control efficiency.

EMISSION UNIT OPERATING SCHEDULE (hours/day, hours/year, or other)

22.	Actual Operation:	8424
23.	Maximum Operation:	8760

REQUESTED LIMITS

24.	Are you requesting any permit limits?	☐ Yes ☒ No (If Yes, indicate all that apply below)
	☐ Operation Hour Limit(s):	
	☐ Production Limit(s):	
	☐ Material Usage Limit(s):	
	☐ Limits Based on Stack Testing:	Please attach all relevant stack testing summary reports
	☐ Other:	
25.	Rationale for Requesting the Limit(s):	

Instructions for Form EU0

This form provides DEQ with information about an emissions unit. An emissions unit is the equipment or process that generates emissions of regulated air pollutant(s). This form is used by the permit writer to become familiar with the emissions unit (EU). This form is also used by DEQ to identify the control equipment and the emission point (stack or vent) used for the emission unit(s) proposed in this permit application. This form also asks for supporting documents to verify stated control efficiencies and details about the emission point. Additional information may be requested.

1 - 4. Provide the same company name, facility name (if different), facility ID number, and brief project description as on Form CS in the boxes provided. This is useful in case any pages of the application get separated.

5. Provide the name of the emissions unit (EU), such as “Union boiler,” etc. A separate EU0 form is required for each emissions unit.

6. Provide the identification (ID) number of the EU. It can be any unique identifier you choose; however, this ID number should be unique to this EU and should be used consistently throughout this application and any other air quality permit application(s) (e.g., operating permit application) to identify this EU.

7. Indicate the type of EU by checking the appropriate box (e.g., a new source to be constructed, an unpermitted existing source (as-built) applying for the first time, or an existing permitted source to be modified). If the EU is being modified, indicate on the form the most recent permit issued for the EU.

8. Provide the manufacturer's name for the EU. If the EU is custom-designed or homemade, indicate so.

9. Provide the model number of the EU. If the EU is custom-designed or homemade, indicate so.

10. Provide the maximum capacity of the EU. For example, a boiler’s rated capacity may be modified in units of MMBtu/hr in terms of heat input of natural gas; an assembly line capacity may be in parts produced per day. Capacity should be based on a rated nameplate or as stated in the manufacturer’s literature.

11. The date of construction is the month, day, and year in which construction or modification was commenced.

Definitions:

Construction fabrication, erection, or installation of an affected facility.

Commenced an owner or operator has undertaken a continuous program of construction or modification or that an owner or operator has entered into a contractual obligation to undertake and complete, within a reasonable time, a continuous program of construction or modification.

Modification any physical change in, or change in the method of operation of, an existing facility which increases the amount of any air pollutant (to which a standard applies) emitted to the atmosphere by that facility or which results in the emission of any air pollutant (to which a standard applies) to the atmosphere not previously emitted.

12. If the EU has been or will be modified, provide the month, day, and year of the most recent or future modification as defined in IDAPA 58.01.01.006.

13. Indicate if emissions from the EU are controlled by air pollution control equipment. If the answer is yes, complete the next section. If the answer is no, go to line 18.

14. Provide the name of the air pollution control equipment (e.g., wet scrubber) and the control equipment’s identification number. This identification number should be unique to this air pollution control equipment and should be used consistently throughout this and all other air quality permit applications (e.g., operating permit application) to identify this air pollution control equipment.

15. Provide the date the air pollution control equipment was installed.

16. If the air pollution control equipment has been modified, provide the date of the modification.

17. Provide the name of the manufacturer and the model number for the air pollution control equipment.

18. If this air pollution control equipment controls emissions from more than this EU, provide the identification number(s) of the other EU(s).

19. Indicate if this air pollution control equipment operates on a schedule different from the EU(s) it controls.

20. Indicate if the air pollution control manufacturer guarantees the control efficiency of the control equipment. If the answer is yes, attach the manufacturer's guarantee and label it with the air pollution control equipment identification number. Indicate the control efficiency for the target pollutant(s).

21. If the control efficiency of the air pollution control equipment is not guaranteed, attach the design specifications and any performance data to support the control efficiency stated in part 16. Label the supporting documentation with the air pollution control equipment identification number.

22. Provide the projected actual operating schedule for the emission unit in hours/day, hours/year, or other.

23. Provide the maximum operating schedule for the emission unit in hours/day, hours/year, or other.

24. If you are requesting to have limits placed on this EU, mark "Yes." Then, check the applicable requested limit(s) and provide the limit(s). For example, production limits may be in terms of parts produced per year, material usage limits may be in gallons per day.

25. Please provide the reason you are requesting limits, if any. This helps DEQ and the applicant determine whether the limits are necessary, and if they will accomplish the desired purpose. Provide supporting documentation (calculations, modeling assessment, regulatory review, etc.) for each limit requested.

DEQ AIR QUALITY PROGRAM
1410 N. Hilton, Boise, ID 83706
For assistance, call the
Air Permit Hotline – 1-877-5PERMIT

Emissions Unit - General **Form EU0**
Revision 4
08/28/08

Please see instructions on page 2 before filling out the form.

IDENTIFICATION

1. Company Name:	2. Facility Name:	3. Facility ID No:
Idahoan Foods, LLC	Idaho Falls Facility	019-00038

4. Brief Project Description:	Replacing Three Proctors with 2 Fluid Bed Dryers and Adding a Drum Dryer

EMISSIONS UNIT (PROCESS) IDENTIFICATION & DESCRIPTION

5.	Emissions Unit (EU) Name:	BAG HOUSE, PRODUCT TRANSFER, REAL LINE 1
6.	EU ID Number:	16
7.	EU Type:	☒ New Source ☐ Unpermitted Existing Source ☐ Modification to a Permitted Source -- Previous Permit #:T2-2009.0027 Date Issued: 5/9/2008
8.	Manufacturer:	KTRON
9.	Model:	F15214-174M
10..	Maximum Capacity:	1.88 T/Hr
11.	Date of Construction:	2012
12.	Date of Modification (if any):	NA
13.	Is this a Controlled Emission Unit?	☒ No ☐ Yes If Yes, complete the following section. If No, go to line 22.

EMISSIONS CONTROL EQUIPMENT

14. Control Equipment Name and ID:	
15. Date of Installation:	16. Date of Modification (if any):
17. Manufacturer and Model Number:	
18. ID(s) of Emission Unit Controlled:	
19. Is operating schedule different than emission units(s) involved?	☐ Yes ☐ No
20. Does the manufacturer guarantee the control efficiency of the control equipment?	☐ Yes ☐ No (If Yes, attach and label manufacturer guarantee)

	Pollutant Controlled					
	PM	PM10	SO_2	NOx	VOC	CO
Control Efficiency						

21. If manufacturer's data is not available, attach a separate sheet of paper to provide the control equipment design specifications and performance data to support the above mentioned control efficiency.

EMISSION UNIT OPERATING SCHEDULE (hours/day, hours/year, or other)

22.	Actual Operation:	8424
23.	Maximum Operation:	8760

REQUESTED LIMITS

24.	Are you requesting any permit limits?	☐ Yes ☒ No (If Yes, indicate all that apply below)
	☐ Operation Hour Limit(s):	
	☐ Production Limit(s):	
	☐ Material Usage Limit(s):	
	☐ Limits Based on Stack Testing:	Please attach all relevant stack testing summary reports
	☐ Other:	
25.	Rationale for Requesting the Limit(s):	

Instructions for Form EU0

This form provides DEQ with information about an emissions unit. An emissions unit is the equipment or process that generates emissions of regulated air pollutant(s). This form is used by the permit writer to become familiar with the emissions unit (EU). This form is also used by DEQ to identify the control equipment and the emission point (stack or vent) used for the emission unit(s) proposed in this permit application. This form also asks for supporting documents to verify stated control efficiencies and details about the emission point. Additional information may be requested.

1 - 4. Provide the same company name, facility name (if different), facility ID number, and brief project description as on Form CS in the boxes provided. This is useful in case any pages of the application get separated.

5. Provide the name of the emissions unit (EU), such as “Union boiler,” etc. A separate EU0 form is required for each emissions unit.

6. Provide the identification (ID) number of the EU. It can be any unique identifier you choose; however, this ID number should be unique to this EU and should be used consistently throughout this application and any other air quality permit application(s) (e.g., operating permit application) to identify this EU.

7. Indicate the type of EU by checking the appropriate box (e.g., a new source to be constructed, an unpermitted existing source (as-built) applying for the first time, or an existing permitted source to be modified). If the EU is being modified, indicate on the form the most recent permit issued for the EU.

8. Provide the manufacturer's name for the EU. If the EU is custom-designed or homemade, indicate so.

9. Provide the model number of the EU. If the EU is custom-designed or homemade, indicate so.

10. Provide the maximum capacity of the EU. For example, a boiler’s rated capacity may be modified in units of MMBtu/hr in terms of heat input of natural gas; an assembly line capacity may be in parts produced per day. Capacity should be based on a rated nameplate or as stated in the manufacturer’s literature.

11. The date of construction is the month, day, and year in which construction or modification was commenced.

Definitions:

Construction fabrication, erection, or installation of an affected facility.

Commenced an owner or operator has undertaken a continuous program of construction or modification or that an owner or operator has entered into a contractual obligation to undertake and complete, within a reasonable time, a continuous program of construction or modification.

Modification any physical change in, or change in the method of operation of, an existing facility which increases the amount of any air pollutant (to which a standard applies) emitted to the atmosphere by that facility or which results in the emission of any air pollutant (to which a standard applies) to the atmosphere not previously emitted.

12. If the EU has been or will be modified, provide the month, day, and year of the most recent or future modification as defined in IDAPA 58.01.01.006.

13. Indicate if emissions from the EU are controlled by air pollution control equipment. If the answer is yes, complete the next section. If the answer is no, go to line 18.

14. Provide the name of the air pollution control equipment (e.g., wet scrubber) and the control equipment’s identification number. This identification number should be unique to this air pollution control equipment and should be used consistently throughout this and all other air quality permit applications (e.g., operating permit application) to identify this air pollution control equipment.

15. Provide the date the air pollution control equipment was installed.

16. If the air pollution control equipment has been modified, provide the date of the modification.

17. Provide the name of the manufacturer and the model number for the air pollution control equipment.

18. If this air pollution control equipment controls emissions from more than this EU, provide the identification number(s) of the other EU(s).

19. Indicate if this air pollution control equipment operates on a schedule different from the EU(s) it controls.

20. Indicate if the air pollution control manufacturer guarantees the control efficiency of the control equipment. If the answer is yes, attach the manufacturer's guarantee and label it with the air pollution control equipment identification number. Indicate the control efficiency for the target pollutant(s).

21. If the control efficiency of the air pollution control equipment is not guaranteed, attach the design specifications and any performance data to support the control efficiency stated in part 16. Label the supporting documentation with the air pollution control equipment identification number.

22. Provide the projected actual operating schedule for the emission unit in hours/day, hours/year, or other.

23. Provide the maximum operating schedule for the emission unit in hours/day, hours/year, or other.

24. If you are requesting to have limits placed on this EU, mark "Yes." Then, check the applicable requested limit(s) and provide the limit(s). For example, production limits may be in terms of parts produced per year, material usage limits may be in gallons per day.

25. Please provide the reason you are requesting limits, if any. This helps DEQ and the applicant determine whether the limits are necessary, and if they will accomplish the desired purpose. Provide supporting documentation (calculations, modeling assessment, regulatory review, etc.) for each limit requested.

DEQ AIR QUALITY PROGRAM
1410 N. Hilton, Boise, ID 83706
For assistance, call the
Air Permit Hotline – 1-877-5PERMIT

Emissions Unit - General **Form EU0**
Revision 4
08/28/08

Please see instructions on page 2 before filling out the form.

IDENTIFICATION

1. Company Name:	2. Facility Name:	3. Facility ID No:
Idahoan Foods, LLC	Idaho Falls Facility	019-00038

4. Brief Project Description:	Replacing Three Proctors with 2 Fluid Bed Dryers and Adding a Drum Dryer

EMISSIONS UNIT (PROCESS) IDENTIFICATION & DESCRIPTION

5.	Emissions Unit (EU) Name:	BAG HOUSE, PRODUCT TRANSFER, REAL LINE 2
6.	EU ID Number:	17
7.	EU Type:	☒ New Source ☐ Unpermitted Existing Source ☐ Modification to a Permitted Source -- Previous Permit #:T2-2009.0027 Date Issued: 5/9/2008
8.	Manufacturer:	KTRON
9.	Model:	F15214-174M
10..	Maximum Capacity:	1.88 T/Hr
11.	Date of Construction:	2012
12.	Date of Modification (if any):	NA
13.	Is this a Controlled Emission Unit?	☒ No ☐ Yes If Yes, complete the following section. If No, go to line 22.

EMISSIONS CONTROL EQUIPMENT

14. Control Equipment Name and ID:	
15. Date of Installation:	16. Date of Modification (if any):
17. Manufacturer and Model Number:	
18. ID(s) of Emission Unit Controlled:	
19. Is operating schedule different than emission units(s) involved?	☐ Yes ☐ No
20. Does the manufacturer guarantee the control efficiency of the control equipment?	☐ Yes ☐ No (If Yes, attach and label manufacturer guarantee)

	Pollutant Controlled					
	PM	PM10	SO_2	NOx	VOC	CO
Control Efficiency						

21. If manufacturer's data is not available, attach a separate sheet of paper to provide the control equipment design specifications and performance data to support the above mentioned control efficiency.

EMISSION UNIT OPERATING SCHEDULE (hours/day, hours/year, or other)

22.	Actual Operation:	8424
23.	Maximum Operation:	8760

REQUESTED LIMITS

24.	Are you requesting any permit limits?	☐ Yes ☒ No (If Yes, indicate all that apply below)
	☐ Operation Hour Limit(s):	
	☐ Production Limit(s):	
	☐ Material Usage Limit(s):	
	☐ Limits Based on Stack Testing:	Please attach all relevant stack testing summary reports
	☐ Other:	
25.	Rationale for Requesting the Limit(s):	

Instructions for Form EU0

This form provides DEQ with information about an emissions unit. An emissions unit is the equipment or process that generates emissions of regulated air pollutant(s). This form is used by the permit writer to become familiar with the emissions unit (EU). This form is also used by DEQ to identify the control equipment and the emission point (stack or vent) used for the emission unit(s) proposed in this permit application. This form also asks for supporting documents to verify stated control efficiencies and details about the emission point. Additional information may be requested.

1 - 4. Provide the same company name, facility name (if different), facility ID number, and brief project description as on Form CS in the boxes provided. This is useful in case any pages of the application get separated.

5. Provide the name of the emissions unit (EU), such as “Union boiler,” etc. A separate EU0 form is required for each emissions unit.

6. Provide the identification (ID) number of the EU. It can be any unique identifier you choose; however, this ID number should be unique to this EU and should be used consistently throughout this application and any other air quality permit application(s) (e.g., operating permit application) to identify this EU.

7. Indicate the type of EU by checking the appropriate box (e.g., a new source to be constructed, an unpermitted existing source (as-built) applying for the first time, or an existing permitted source to be modified). If the EU is being modified, indicate on the form the most recent permit issued for the EU.

8. Provide the manufacturer's name for the EU. If the EU is custom-designed or homemade, indicate so.

9. Provide the model number of the EU. If the EU is custom-designed or homemade, indicate so.

10. Provide the maximum capacity of the EU. For example, a boiler’s rated capacity may be modified in units of MMBtu/hr in terms of heat input of natural gas; an assembly line capacity may be in parts produced per day. Capacity should be based on a rated nameplate or as stated in the manufacturer’s literature.

11. The date of construction is the month, day, and year in which construction or modification was commenced.

Definitions:

Construction fabrication, erection, or installation of an affected facility.

Commenced an owner or operator has undertaken a continuous program of construction or modification or that an owner or operator has entered into a contractual obligation to undertake and complete, within a reasonable time, a continuous program of construction or modification.

Modification any physical change in, or change in the method of operation of, an existing facility which increases the amount of any air pollutant (to which a standard applies) emitted to the atmosphere by that facility or which results in the emission of any air pollutant (to which a standard applies) to the atmosphere not previously emitted.

12. If the EU has been or will be modified, provide the month, day, and year of the most recent or future modification as defined in IDAPA 58.01.01.006.

13. Indicate if emissions from the EU are controlled by air pollution control equipment. If the answer is yes, complete the next section. If the answer is no, go to line 18.

14. Provide the name of the air pollution control equipment (e.g., wet scrubber) and the control equipment’s identification number. This identification number should be unique to this air pollution control equipment and should be used consistently throughout this and all other air quality permit applications (e.g., operating permit application) to identify this air pollution control equipment.

15. Provide the date the air pollution control equipment was installed.

16. If the air pollution control equipment has been modified, provide the date of the modification.

17. Provide the name of the manufacturer and the model number for the air pollution control equipment.

18. If this air pollution control equipment controls emissions from more than this EU, provide the identification number(s) of the other EU(s).

19. Indicate if this air pollution control equipment operates on a schedule different from the EU(s) it controls.

20. Indicate if the air pollution control manufacturer guarantees the control efficiency of the control equipment. If the answer is yes, attach the manufacturer's guarantee and label it with the air pollution control equipment identification number. Indicate the control efficiency for the target pollutant(s).

21. If the control efficiency of the air pollution control equipment is not guaranteed, attach the design specifications and any performance data to support the control efficiency stated in part 16. Label the supporting documentation with the air pollution control equipment identification number.

22. Provide the projected actual operating schedule for the emission unit in hours/day, hours/year, or other.

23. Provide the maximum operating schedule for the emission unit in hours/day, hours/year, or other.

24. If you are requesting to have limits placed on this EU, mark "Yes." Then, check the applicable requested limit(s) and provide the limit(s). For example, production limits may be in terms of parts produced per year, material usage limits may be in gallons per day.

25. Please provide the reason you are requesting limits, if any. This helps DEQ and the applicant determine whether the limits are necessary, and if they will accomplish the desired purpose. Provide supporting documentation (calculations, modeling assessment, regulatory review, etc.) for each limit requested.

DEQ AIR QUALITY PROGRAM
1410 N. Hilton, Boise, ID 83706
For assistance, call the
Air Permit Hotline – 1-877-5PERMIT

Emissions Unit - General **Form EU0**
Revision 4
08/28/08

Please see instructions on page 2 before filling out the form.

IDENTIFICATION

1. Company Name:	2. Facility Name:	3. Facility ID No:
Idahoan Foods, LLC	Idaho Falls Facility	019-00038

4. Brief Project Description:	Replacing Three Proctors with 2 Fluid Bed Dryers and Adding a Drum Dryer

EMISSIONS UNIT (PROCESS) IDENTIFICATION & DESCRIPTION

5.	Emissions Unit (EU) Name:	BAG HOUSE, FINISHED PRODUCT , REAL LINE 1
6.	EU ID Number:	18
7.	EU Type:	☒ New Source ☐ Unpermitted Existing Source ☐ Modification to a Permitted Source -- Previous Permit #:T2-2009.0027 Date Issued: 5/9/2008
8.	Manufacturer:	KTRON
9.	Model:	PF15214-186M.1
10..	Maximum Capacity:	1.88 T/Hr
11.	Date of Construction:	2012
12.	Date of Modification (if any):	NA
13.	Is this a Controlled Emission Unit?	☒ No ☐ Yes If Yes, complete the following section. If No, go to line 22.

EMISSIONS CONTROL EQUIPMENT

14. Control Equipment Name and ID:	
15. Date of Installation:	16. Date of Modification (if any):
17. Manufacturer and Model Number:	
18. ID(s) of Emission Unit Controlled:	
19. Is operating schedule different than emission units(s) involved?	☐ Yes ☐ No
20. Does the manufacturer guarantee the control efficiency of the control equipment?	☐ Yes ☐ No (If Yes, attach and label manufacturer guarantee)

	Pollutant Controlled					
	PM	PM10	SO_2	NOx	VOC	CO
Control Efficiency						

21. If manufacturer's data is not available, attach a separate sheet of paper to provide the control equipment design specifications and performance data to support the above mentioned control efficiency.

EMISSION UNIT OPERATING SCHEDULE (hours/day, hours/year, or other)

22.	Actual Operation:	8424
23.	Maximum Operation:	8760

REQUESTED LIMITS

24.	Are you requesting any permit limits?	☐ Yes ☒ No (If Yes, indicate all that apply below)
	☐ Operation Hour Limit(s):	
	☐ Production Limit(s):	
	☐ Material Usage Limit(s):	
	☐ Limits Based on Stack Testing:	Please attach all relevant stack testing summary reports
	☐ Other:	
25.	Rationale for Requesting the Limit(s):	

Instructions for Form EU0

This form provides DEQ with information about an emissions unit. An emissions unit is the equipment or process that generates emissions of regulated air pollutant(s). This form is used by the permit writer to become familiar with the emissions unit (EU). This form is also used by DEQ to identify the control equipment and the emission point (stack or vent) used for the emission unit(s) proposed in this permit application. This form also asks for supporting documents to verify stated control efficiencies and details about the emission point. Additional information may be requested.

1 - 4. Provide the same company name, facility name (if different), facility ID number, and brief project description as on Form CS in the boxes provided. This is useful in case any pages of the application get separated.

5. Provide the name of the emissions unit (EU), such as “Union boiler,” etc. A separate EU0 form is required for each emissions unit.

6. Provide the identification (ID) number of the EU. It can be any unique identifier you choose; however, this ID number should be unique to this EU and should be used consistently throughout this application and any other air quality permit application(s) (e.g., operating permit application) to identify this EU.

7. Indicate the type of EU by checking the appropriate box (e.g., a new source to be constructed, an unpermitted existing source (as-built) applying for the first time, or an existing permitted source to be modified). If the EU is being modified, indicate on the form the most recent permit issued for the EU.

8. Provide the manufacturer's name for the EU. If the EU is custom-designed or homemade, indicate so.

9. Provide the model number of the EU. If the EU is custom-designed or homemade, indicate so.

10. Provide the maximum capacity of the EU. For example, a boiler’s rated capacity may be modified in units of MMBtu/hr in terms of heat input of natural gas; an assembly line capacity may be in parts produced per day. Capacity should be based on a rated nameplate or as stated in the manufacturer’s literature.

11. The date of construction is the month, day, and year in which construction or modification was commenced.

Definitions:

Construction fabrication, erection, or installation of an affected facility.

Commenced an owner or operator has undertaken a continuous program of construction or modification or that an owner or operator has entered into a contractual obligation to undertake and complete, within a reasonable time, a continuous program of construction or modification.

Modification any physical change in, or change in the method of operation of, an existing facility which increases the amount of any air pollutant (to which a standard applies) emitted to the atmosphere by that facility or which results in the emission of any air pollutant (to which a standard applies) to the atmosphere not previously emitted.

12. If the EU has been or will be modified, provide the month, day, and year of the most recent or future modification as defined in IDAPA 58.01.01.006.

13. Indicate if emissions from the EU are controlled by air pollution control equipment. If the answer is yes, complete the next section. If the answer is no, go to line 18.

14. Provide the name of the air pollution control equipment (e.g., wet scrubber) and the control equipment’s identification number. This identification number should be unique to this air pollution control equipment and should be used consistently throughout this and all other air quality permit applications (e.g., operating permit application) to identify this air pollution control equipment.

15. Provide the date the air pollution control equipment was installed.

16. If the air pollution control equipment has been modified, provide the date of the modification.

17. Provide the name of the manufacturer and the model number for the air pollution control equipment.

18. If this air pollution control equipment controls emissions from more than this EU, provide the identification number(s) of the other EU(s).

19. Indicate if this air pollution control equipment operates on a schedule different from the EU(s) it controls.

20. Indicate if the air pollution control manufacturer guarantees the control efficiency of the control equipment. If the answer is yes, attach the manufacturer's guarantee and label it with the air pollution control equipment identification number. Indicate the control efficiency for the target pollutant(s).

21. If the control efficiency of the air pollution control equipment is not guaranteed, attach the design specifications and any performance data to support the control efficiency stated in part 16. Label the supporting documentation with the air pollution control equipment identification number.

22. Provide the projected actual operating schedule for the emission unit in hours/day, hours/year, or other.

23. Provide the maximum operating schedule for the emission unit in hours/day, hours/year, or other.

24. If you are requesting to have limits placed on this EU, mark "Yes." Then, check the applicable requested limit(s) and provide the limit(s). For example, production limits may be in terms of parts produced per year, material usage limits may be in gallons per day.

25. Please provide the reason you are requesting limits, if any. This helps DEQ and the applicant determine whether the limits are necessary, and if they will accomplish the desired purpose. Provide supporting documentation (calculations, modeling assessment, regulatory review, etc.) for each limit requested.

DEQ AIR QUALITY PROGRAM
1410 N. Hilton, Boise, ID 83706
For assistance, call the
Air Permit Hotline – 1-877-5PERMIT

Emissions Unit - General **Form EU0**
Revision 4
08/28/08

Please see instructions on page 2 before filling out the form.

IDENTIFICATION

1. Company Name:	2. Facility Name:	3. Facility ID No:
Idahoan Foods, LLC	Idaho Falls Facility	019-00038

4. Brief Project Description:	Replacing Three Proctors with 2 Fluid Bed Dryers and Adding a Drum Dryer

EMISSIONS UNIT (PROCESS) IDENTIFICATION & DESCRIPTION

5.	Emissions Unit (EU) Name:	BAG HOUSE, FINISHED PRODUCT , REAL LINE 2
6.	EU ID Number:	19
7.	EU Type:	☒ New Source ☐ Unpermitted Existing Source ☐ Modification to a Permitted Source -- Previous Permit #:T2-2009.0027 Date Issued: 5/9/2008
8.	Manufacturer:	KTRON
9.	Model:	PF15214-186M.1
10..	Maximum Capacity:	1.88 T/Hr
11.	Date of Construction:	2012
12.	Date of Modification (if any):	NA
13.	Is this a Controlled Emission Unit?	☒ No ☐ Yes If Yes, complete the following section. If No, go to line 22.

EMISSIONS CONTROL EQUIPMENT

14. Control Equipment Name and ID:	
15. Date of Installation:	16. Date of Modification (if any):
17. Manufacturer and Model Number:	
18. ID(s) of Emission Unit Controlled:	
19. Is operating schedule different than emission units(s) involved?	☐ Yes ☐ No
20. Does the manufacturer guarantee the control efficiency of the control equipment?	☐ Yes ☐ No (If Yes, attach and label manufacturer guarantee)

	Pollutant Controlled					
	PM	PM10	SO_2	NOx	VOC	CO
Control Efficiency						

21. If manufacturer's data is not available, attach a separate sheet of paper to provide the control equipment design specifications and performance data to support the above mentioned control efficiency.

EMISSION UNIT OPERATING SCHEDULE (hours/day, hours/year, or other)

22.	Actual Operation:	8424
23.	Maximum Operation:	8760

REQUESTED LIMITS

24.	Are you requesting any permit limits?	☐ Yes ☒ No (If Yes, indicate all that apply below)
	☐ Operation Hour Limit(s):	
	☐ Production Limit(s):	
	☐ Material Usage Limit(s):	
	☐ Limits Based on Stack Testing:	Please attach all relevant stack testing summary reports
	☐ Other:	
25.	Rationale for Requesting the Limit(s):	

Instructions for Form EU0

This form provides DEQ with information about an emissions unit. An emissions unit is the equipment or process that generates emissions of regulated air pollutant(s). This form is used by the permit writer to become familiar with the emissions unit (EU). This form is also used by DEQ to identify the control equipment and the emission point (stack or vent) used for the emission unit(s) proposed in this permit application. This form also asks for supporting documents to verify stated control efficiencies and details about the emission point. Additional information may be requested.

1 - 4. Provide the same company name, facility name (if different), facility ID number, and brief project description as on Form CS in the boxes provided. This is useful in case any pages of the application get separated.

5. Provide the name of the emissions unit (EU), such as “Union boiler,” etc. A separate EU0 form is required for each emissions unit.

6. Provide the identification (ID) number of the EU. It can be any unique identifier you choose; however, this ID number should be unique to this EU and should be used consistently throughout this application and any other air quality permit application(s) (e.g., operating permit application) to identify this EU.

7. Indicate the type of EU by checking the appropriate box (e.g., a new source to be constructed, an unpermitted existing source (as-built) applying for the first time, or an existing permitted source to be modified). If the EU is being modified, indicate on the form the most recent permit issued for the EU.

8. Provide the manufacturer's name for the EU. If the EU is custom-designed or homemade, indicate so.

9. Provide the model number of the EU. If the EU is custom-designed or homemade, indicate so.

10. Provide the maximum capacity of the EU. For example, a boiler’s rated capacity may be modified in units of MMBtu/hr in terms of heat input of natural gas; an assembly line capacity may be in parts produced per day. Capacity should be based on a rated nameplate or as stated in the manufacturer’s literature.

11. The date of construction is the month, day, and year in which construction or modification was commenced.

Definitions:

Construction fabrication, erection, or installation of an affected facility.

Commenced an owner or operator has undertaken a continuous program of construction or modification or that an owner or operator has entered into a contractual obligation to undertake and complete, within a reasonable time, a continuous program of construction or modification.

Modification any physical change in, or change in the method of operation of, an existing facility which increases the amount of any air pollutant (to which a standard applies) emitted to the atmosphere by that facility or which results in the emission of any air pollutant (to which a standard applies) to the atmosphere not previously emitted.

12. If the EU has been or will be modified, provide the month, day, and year of the most recent or future modification as defined in IDAPA 58.01.01.006.

13. Indicate if emissions from the EU are controlled by air pollution control equipment. If the answer is yes, complete the next section. If the answer is no, go to line 18.

14. Provide the name of the air pollution control equipment (e.g., wet scrubber) and the control equipment’s identification number. This identification number should be unique to this air pollution control equipment and should be used consistently throughout this and all other air quality permit applications (e.g., operating permit application) to identify this air pollution control equipment.

15. Provide the date the air pollution control equipment was installed.

16. If the air pollution control equipment has been modified, provide the date of the modification.

17. Provide the name of the manufacturer and the model number for the air pollution control equipment.

18. If this air pollution control equipment controls emissions from more than this EU, provide the identification number(s) of the other EU(s).

19. Indicate if this air pollution control equipment operates on a schedule different from the EU(s) it controls.

20. Indicate if the air pollution control manufacturer guarantees the control efficiency of the control equipment. If the answer is yes, attach the manufacturer's guarantee and label it with the air pollution control equipment identification number. Indicate the control efficiency for the target pollutant(s).

21. If the control efficiency of the air pollution control equipment is not guaranteed, attach the design specifications and any performance data to support the control efficiency stated in part 16. Label the supporting documentation with the air pollution control equipment identification number.

22. Provide the projected actual operating schedule for the emission unit in hours/day, hours/year, or other.

23. Provide the maximum operating schedule for the emission unit in hours/day, hours/year, or other.

24. If you are requesting to have limits placed on this EU, mark "Yes." Then, check the applicable requested limit(s) and provide the limit(s). For example, production limits may be in terms of parts produced per year, material usage limits may be in gallons per day.

25. Please provide the reason you are requesting limits, if any. This helps DEQ and the applicant determine whether the limits are necessary, and if they will accomplish the desired purpose. Provide supporting documentation (calculations, modeling assessment, regulatory review, etc.) for each limit requested.

DEQ AIR QUALITY PROGRAM
1410 N. Hilton, Boise, ID 83706
For assistance, call the
Air Permit Hotline – 1-877-5PERMIT

Emissions Unit - General **Form EU0**
Revision 4
08/28/08

Please see instructions on page 2 before filling out the form.

IDENTIFICATION

1. Company Name:	2. Facility Name:	3. Facility ID No:
Idahoan Foods, LLC	Idaho Falls Facility	019-00038

4. Brief Project Description:	Replacing Three Proctors with 2 Fluid Bed Dryers and Adding a Drum Dryer

EMISSIONS UNIT (PROCESS) IDENTIFICATION & DESCRIPTION

5.	Emissions Unit (EU) Name:	BAG HOUSE, PRODUCT TRANSFER RAW , CREAMY MASH
6.	EU ID Number:	20
7.	EU Type:	☒ New Source ☐ Unpermitted Existing Source ☐ Modification to a Permitted Source -- Previous Permit #:T2-2009.0027 Date Issued: 5/9/2008
8.	Manufacturer:	Joyeno
9.	Model:	Unknown
10..	Maximum Capacity:	.75 T/HR
11.	Date of Construction:	1985
12.	Date of Modification (if any):	2012
13.	Is this a Controlled Emission Unit?	☒ No ☐ Yes If Yes, complete the following section. If No, go to line 22.

EMISSIONS CONTROL EQUIPMENT

14. Control Equipment Name and ID:	
15. Date of Installation:	16. Date of Modification (if any):
17. Manufacturer and Model Number:	
18. ID(s) of Emission Unit Controlled:	
19. Is operating schedule different than emission units(s) involved?	☐ Yes ☐ No
20. Does the manufacturer guarantee the control efficiency of the control equipment?	☐ Yes ☐ No (If Yes, attach and label manufacturer guarantee)

	Pollutant Controlled					
	PM	PM10	SO_2	NOx	VOC	CO
Control Efficiency						

21. If manufacturer's data is not available, attach a separate sheet of paper to provide the control equipment design specifications and performance data to support the above mentioned control efficiency.

EMISSION UNIT OPERATING SCHEDULE (hours/day, hours/year, or other)

22.	Actual Operation:	8424
23.	Maximum Operation:	8760

REQUESTED LIMITS

24.	Are you requesting any permit limits?	☐ Yes ☒ No (If Yes, indicate all that apply below)
	☐ Operation Hour Limit(s):	
	☐ Production Limit(s):	
	☐ Material Usage Limit(s):	
	☐ Limits Based on Stack Testing:	Please attach all relevant stack testing summary reports
	☐ Other:	
25.	Rationale for Requesting the Limit(s):	

Instructions for Form EU0

This form provides DEQ with information about an emissions unit. An emissions unit is the equipment or process that generates emissions of regulated air pollutant(s). This form is used by the permit writer to become familiar with the emissions unit (EU). This form is also used by DEQ to identify the control equipment and the emission point (stack or vent) used for the emission unit(s) proposed in this permit application. This form also asks for supporting documents to verify stated control efficiencies and details about the emission point. Additional information may be requested.

1 - 4. Provide the same company name, facility name (if different), facility ID number, and brief project description as on Form CS in the boxes provided. This is useful in case any pages of the application get separated.

5. Provide the name of the emissions unit (EU), such as “Union boiler,” etc. A separate EU0 form is required for each emissions unit.

6. Provide the identification (ID) number of the EU. It can be any unique identifier you choose; however, this ID number should be unique to this EU and should be used consistently throughout this application and any other air quality permit application(s) (e.g., operating permit application) to identify this EU.

7. Indicate the type of EU by checking the appropriate box (e.g., a new source to be constructed, an unpermitted existing source (as-built) applying for the first time, or an existing permitted source to be modified). If the EU is being modified, indicate on the form the most recent permit issued for the EU.

8. Provide the manufacturer's name for the EU. If the EU is custom-designed or homemade, indicate so.

9. Provide the model number of the EU. If the EU is custom-designed or homemade, indicate so.

10. Provide the maximum capacity of the EU. For example, a boiler’s rated capacity may be modified in units of MMBtu/hr in terms of heat input of natural gas; an assembly line capacity may be in parts produced per day. Capacity should be based on a rated nameplate or as stated in the manufacturer’s literature.

11. The date of construction is the month, day, and year in which construction or modification was commenced.

Definitions:

Construction fabrication, erection, or installation of an affected facility.

Commenced an owner or operator has undertaken a continuous program of construction or modification or that an owner or operator has entered into a contractual obligation to undertake and complete, within a reasonable time, a continuous program of construction or modification.

Modification any physical change in, or change in the method of operation of, an existing facility which increases the amount of any air pollutant (to which a standard applies) emitted to the atmosphere by that facility or which results in the emission of any air pollutant (to which a standard applies) to the atmosphere not previously emitted.

12. If the EU has been or will be modified, provide the month, day, and year of the most recent or future modification as defined in IDAPA 58.01.01.006.

13. Indicate if emissions from the EU are controlled by air pollution control equipment. If the answer is yes, complete the next section. If the answer is no, go to line 18.

14. Provide the name of the air pollution control equipment (e.g., wet scrubber) and the control equipment’s identification number. This identification number should be unique to this air pollution control equipment and should be used consistently throughout this and all other air quality permit applications (e.g., operating permit application) to identify this air pollution control equipment.

15. Provide the date the air pollution control equipment was installed.

16. If the air pollution control equipment has been modified, provide the date of the modification.

17. Provide the name of the manufacturer and the model number for the air pollution control equipment.

18. If this air pollution control equipment controls emissions from more than this EU, provide the identification number(s) of the other EU(s).

19. Indicate if this air pollution control equipment operates on a schedule different from the EU(s) it controls.

20. Indicate if the air pollution control manufacturer guarantees the control efficiency of the control equipment. If the answer is yes, attach the manufacturer's guarantee and label it with the air pollution control equipment identification number. Indicate the control efficiency for the target pollutant(s).

21. If the control efficiency of the air pollution control equipment is not guaranteed, attach the design specifications and any performance data to support the control efficiency stated in part 16. Label the supporting documentation with the air pollution control equipment identification number.

22. Provide the projected actual operating schedule for the emission unit in hours/day, hours/year, or other.

23. Provide the maximum operating schedule for the emission unit in hours/day, hours/year, or other.

24. If you are requesting to have limits placed on this EU, mark "Yes." Then, check the applicable requested limit(s) and provide the limit(s). For example, production limits may be in terms of parts produced per year, material usage limits may be in gallons per day.

25. Please provide the reason you are requesting limits, if any. This helps DEQ and the applicant determine whether the limits are necessary, and if they will accomplish the desired purpose. Provide supporting documentation (calculations, modeling assessment, regulatory review, etc.) for each limit requested.

DEQ AIR QUALITY PROGRAM
1410 N. Hilton, Boise, ID 83706
For assistance, call the
Air Permit Hotline – 1-877-5PERMIT

Emissions Unit - General **Form EU0**
Revision 4
08/28/08

Please see instructions on page 2 before filling out the form.

IDENTIFICATION

1. Company Name:	2. Facility Name:	3. Facility ID No:
Idahoan Foods, LLC	Idaho Falls Facility	019-00038

4. Brief Project Description:	Replacing Three Proctors with 2 Fluid Bed Dryers and Adding a Drum Dryer

EMISSIONS UNIT (PROCESS) IDENTIFICATION & DESCRIPTION

5.	Emissions Unit (EU) Name:	BAG HOUSE, FINISHED PRODUCT TRANSFER , CREAMY MASH
6.	EU ID Number:	21
7.	EU Type:	☒ New Source ☐ Unpermitted Existing Source ☐ Modification to a Permitted Source -- Previous Permit #:T2-2009.0027 Date Issued: 5/9/2008
8.	Manufacturer:	KTRON
9.	Model:	PF15214-186M.1
10..	Maximum Capacity:	.75 T/Hr
11.	Date of Construction:	2012
12.	Date of Modification (if any):	NA
13.	Is this a Controlled Emission Unit?	☒ No ☐ Yes If Yes, complete the following section. If No, go to line 22.

EMISSIONS CONTROL EQUIPMENT

14. Control Equipment Name and ID:	
15. Date of Installation:	16. Date of Modification (if any):
17. Manufacturer and Model Number:	
18. ID(s) of Emission Unit Controlled:	
19. Is operating schedule different than emission units(s) involved?	☐ Yes ☐ No
20. Does the manufacturer guarantee the control efficiency of the control equipment?	☐ Yes ☐ No (If Yes, attach and label manufacturer guarantee)

	Pollutant Controlled					
	PM	PM10	SO_2	NOx	VOC	CO
Control Efficiency						

21. If manufacturer's data is not available, attach a separate sheet of paper to provide the control equipment design specifications and performance data to support the above mentioned control efficiency.

EMISSION UNIT OPERATING SCHEDULE (hours/day, hours/year, or other)

22.	Actual Operation:	8424
23.	Maximum Operation:	8760

REQUESTED LIMITS

24.	Are you requesting any permit limits?	☐ Yes ☒ No (If Yes, indicate all that apply below)
	☐ Operation Hour Limit(s):	
	☐ Production Limit(s):	
	☐ Material Usage Limit(s):	
	☐ Limits Based on Stack Testing:	Please attach all relevant stack testing summary reports
	☐ Other:	
25.	Rationale for Requesting the Limit(s):	

Instructions for Form EU0

This form provides DEQ with information about an emissions unit. An emissions unit is the equipment or process that generates emissions of regulated air pollutant(s). This form is used by the permit writer to become familiar with the emissions unit (EU). This form is also used by DEQ to identify the control equipment and the emission point (stack or vent) used for the emission unit(s) proposed in this permit application. This form also asks for supporting documents to verify stated control efficiencies and details about the emission point. Additional information may be requested.

1 - 4. Provide the same company name, facility name (if different), facility ID number, and brief project description as on Form CS in the boxes provided. This is useful in case any pages of the application get separated.

5. Provide the name of the emissions unit (EU), such as “Union boiler,” etc. A separate EU0 form is required for each emissions unit.

6. Provide the identification (ID) number of the EU. It can be any unique identifier you choose; however, this ID number should be unique to this EU and should be used consistently throughout this application and any other air quality permit application(s) (e.g., operating permit application) to identify this EU.

7. Indicate the type of EU by checking the appropriate box (e.g., a new source to be constructed, an unpermitted existing source (as-built) applying for the first time, or an existing permitted source to be modified). If the EU is being modified, indicate on the form the most recent permit issued for the EU.

8. Provide the manufacturer's name for the EU. If the EU is custom-designed or homemade, indicate so.

9. Provide the model number of the EU. If the EU is custom-designed or homemade, indicate so.

10. Provide the maximum capacity of the EU. For example, a boiler’s rated capacity may be modified in units of MMBtu/hr in terms of heat input of natural gas; an assembly line capacity may be in parts produced per day. Capacity should be based on a rated nameplate or as stated in the manufacturer’s literature.

11. The date of construction is the month, day, and year in which construction or modification was commenced.

Definitions:

Construction fabrication, erection, or installation of an affected facility.

Commenced an owner or operator has undertaken a continuous program of construction or modification or that an owner or operator has entered into a contractual obligation to undertake and complete, within a reasonable time, a continuous program of construction or modification.

Modification any physical change in, or change in the method of operation of, an existing facility which increases the amount of any air pollutant (to which a standard applies) emitted to the atmosphere by that facility or which results in the emission of any air pollutant (to which a standard applies) to the atmosphere not previously emitted.

12. If the EU has been or will be modified, provide the month, day, and year of the most recent or future modification as defined in IDAPA 58.01.01.006.

13. Indicate if emissions from the EU are controlled by air pollution control equipment. If the answer is yes, complete the next section. If the answer is no, go to line 18.

14. Provide the name of the air pollution control equipment (e.g., wet scrubber) and the control equipment’s identification number. This identification number should be unique to this air pollution control equipment and should be used consistently throughout this and all other air quality permit applications (e.g., operating permit application) to identify this air pollution control equipment.

15. Provide the date the air pollution control equipment was installed.

16. If the air pollution control equipment has been modified, provide the date of the modification.

17. Provide the name of the manufacturer and the model number for the air pollution control equipment.

18. If this air pollution control equipment controls emissions from more than this EU, provide the identification number(s) of the other EU(s).

19. Indicate if this air pollution control equipment operates on a schedule different from the EU(s) it controls.

20. Indicate if the air pollution control manufacturer guarantees the control efficiency of the control equipment. If the answer is yes, attach the manufacturer's guarantee and label it with the air pollution control equipment identification number. Indicate the control efficiency for the target pollutant(s).

21. If the control efficiency of the air pollution control equipment is not guaranteed, attach the design specifications and any performance data to support the control efficiency stated in part 16. Label the supporting documentation with the air pollution control equipment identification number.

22. Provide the projected actual operating schedule for the emission unit in hours/day, hours/year, or other.

23. Provide the maximum operating schedule for the emission unit in hours/day, hours/year, or other.

24. If you are requesting to have limits placed on this EU, mark "Yes." Then, check the applicable requested limit(s) and provide the limit(s). For example, production limits may be in terms of parts produced per year, material usage limits may be in gallons per day.

25. Please provide the reason you are requesting limits, if any. This helps DEQ and the applicant determine whether the limits are necessary, and if they will accomplish the desired purpose. Provide supporting documentation (calculations, modeling assessment, regulatory review, etc.) for each limit requested.

DEQ AIR QUALITY PROGRAM
1410 N. Hilton, Boise, ID 83706
For assistance, call the
Air Permit Hotline – 1-877-5PERMIT

Emissions Unit - General **Form EU0**
Revision 4
08/28/08

Please see instructions on page 2 before filling out the form.

IDENTIFICATION

1. Company Name:	2. Facility Name:	3. Facility ID No:
Idahoan Foods, LLC	Idaho Falls Facility	019-00038

4. Brief Project Description:	Replacing Three Proctors with 2 Fluid Bed Dryers and Adding a Drum Dryer

EMISSIONS UNIT (PROCESS) IDENTIFICATION & DESCRIPTION

5.	Emissions Unit (EU) Name:	BAG HOUSE, EXHAUST, DUST COLLECTOR SYSTEM
6.	EU ID Number:	22
7.	EU Type:	☒ New Source ☐ Unpermitted Existing Source ☐ Modification to a Permitted Source -- Previous Permit #:T2-2009.0027 Date Issued: 5/9/2008
8.	Manufacturer:	UNKNOWN
9.	Model:	UNKNOWN
10..	Maximum Capacity:	.0005 T/HR
11.	Date of Construction:	1985
12.	Date of Modification (if any):	2012
13.	Is this a Controlled Emission Unit?	☒ No ☐ Yes If Yes, complete the following section. If No, go to line 22.

EMISSIONS CONTROL EQUIPMENT

14. Control Equipment Name and ID:	
15. Date of Installation:	16. Date of Modification (if any):
17. Manufacturer and Model Number:	
18. ID(s) of Emission Unit Controlled:	
19. Is operating schedule different than emission units(s) involved?	☐ Yes ☐ No
20. Does the manufacturer guarantee the control efficiency of the control equipment?	☐ Yes ☐ No (If Yes, attach and label manufacturer guarantee)

	Pollutant Controlled					
	PM	PM10	SO_2	NOx	VOC	CO
Control Efficiency						

21. If manufacturer's data is not available, attach a separate sheet of paper to provide the control equipment design specifications and performance data to support the above mentioned control efficiency.

EMISSION UNIT OPERATING SCHEDULE (hours/day, hours/year, or other)

22.	Actual Operation:	8424
23.	Maximum Operation:	8760

REQUESTED LIMITS

24.	Are you requesting any permit limits?	☐ Yes ☒ No (If Yes, indicate all that apply below)
	☐ Operation Hour Limit(s):	
	☐ Production Limit(s):	
	☐ Material Usage Limit(s):	
	☐ Limits Based on Stack Testing:	Please attach all relevant stack testing summary reports
	☐ Other:	
25.	Rationale for Requesting the Limit(s):	

Instructions for Form EU0

This form provides DEQ with information about an emissions unit. An emissions unit is the equipment or process that generates emissions of regulated air pollutant(s). This form is used by the permit writer to become familiar with the emissions unit (EU). This form is also used by DEQ to identify the control equipment and the emission point (stack or vent) used for the emission unit(s) proposed in this permit application. This form also asks for supporting documents to verify stated control efficiencies and details about the emission point. Additional information may be requested.

1 - 4. Provide the same company name, facility name (if different), facility ID number, and brief project description as on Form CS in the boxes provided. This is useful in case any pages of the application get separated.

5. Provide the name of the emissions unit (EU), such as “Union boiler,” etc. A separate EU0 form is required for each emissions unit.

6. Provide the identification (ID) number of the EU. It can be any unique identifier you choose; however, this ID number should be unique to this EU and should be used consistently throughout this application and any other air quality permit application(s) (e.g., operating permit application) to identify this EU.

7. Indicate the type of EU by checking the appropriate box (e.g., a new source to be constructed, an unpermitted existing source (as-built) applying for the first time, or an existing permitted source to be modified). If the EU is being modified, indicate on the form the most recent permit issued for the EU.

8. Provide the manufacturer's name for the EU. If the EU is custom-designed or homemade, indicate so.

9. Provide the model number of the EU. If the EU is custom-designed or homemade, indicate so.

10. Provide the maximum capacity of the EU. For example, a boiler’s rated capacity may be modified in units of MMBtu/hr in terms of heat input of natural gas; an assembly line capacity may be in parts produced per day. Capacity should be based on a rated nameplate or as stated in the manufacturer’s literature.

11. The date of construction is the month, day, and year in which construction or modification was commenced.

Definitions:

Construction fabrication, erection, or installation of an affected facility.

Commenced an owner or operator has undertaken a continuous program of construction or modification or that an owner or operator has entered into a contractual obligation to undertake and complete, within a reasonable time, a continuous program of construction or modification.

Modification any physical change in, or change in the method of operation of, an existing facility which increases the amount of any air pollutant (to which a standard applies) emitted to the atmosphere by that facility or which results in the emission of any air pollutant (to which a standard applies) to the atmosphere not previously emitted.

12. If the EU has been or will be modified, provide the month, day, and year of the most recent or future modification as defined in IDAPA 58.01.01.006.

13. Indicate if emissions from the EU are controlled by air pollution control equipment. If the answer is yes, complete the next section. If the answer is no, go to line 18.

14. Provide the name of the air pollution control equipment (e.g., wet scrubber) and the control equipment’s identification number. This identification number should be unique to this air pollution control equipment and should be used consistently throughout this and all other air quality permit applications (e.g., operating permit application) to identify this air pollution control equipment.

15. Provide the date the air pollution control equipment was installed.

16. If the air pollution control equipment has been modified, provide the date of the modification.

17. Provide the name of the manufacturer and the model number for the air pollution control equipment.

18. If this air pollution control equipment controls emissions from more than this EU, provide the identification number(s) of the other EU(s).

19. Indicate if this air pollution control equipment operates on a schedule different from the EU(s) it controls.

20. Indicate if the air pollution control manufacturer guarantees the control efficiency of the control equipment. If the answer is yes, attach the manufacturer's guarantee and label it with the air pollution control equipment identification number. Indicate the control efficiency for the target pollutant(s).

21. If the control efficiency of the air pollution control equipment is not guaranteed, attach the design specifications and any performance data to support the control efficiency stated in part 16. Label the supporting documentation with the air pollution control equipment identification number.

22. Provide the projected actual operating schedule for the emission unit in hours/day, hours/year, or other.

23. Provide the maximum operating schedule for the emission unit in hours/day, hours/year, or other.

24. If you are requesting to have limits placed on this EU, mark "Yes." Then, check the applicable requested limit(s) and provide the limit(s). For example, production limits may be in terms of parts produced per year, material usage limits may be in gallons per day.

25. Please provide the reason you are requesting limits, if any. This helps DEQ and the applicant determine whether the limits are necessary, and if they will accomplish the desired purpose. Provide supporting documentation (calculations, modeling assessment, regulatory review, etc.) for each limit requested.

DEQ AIR QUALITY PROGRAM
1410 N. Hilton, Boise, ID 83706
For assistance, call the
Air Permit Hotline – 1-877-5PERMIT

Emissions Unit - General **Form EU0**
Revision 4
08/28/08

Please see instructions on page 2 before filling out the form.

IDENTIFICATION

1. Company Name:	2. Facility Name:	3. Facility ID No:
Idahoan Foods, LLC	Idaho Falls Facility	019-00038

4. Brief Project Description:	Replacing Three Proctors with 2 Fluid Bed Dryers and Adding a Drum Dryer

EMISSIONS UNIT (PROCESS) IDENTIFICATION & DESCRIPTION

5.	Emissions Unit (EU) Name:	CYCLONE, BURNER/EXHAUST, FLUID BED DRYER, REAL #1
6.	EU ID Number:	23
7.	EU Type:	☒ New Source ☐ Unpermitted Existing Source ☐ Modification to a Permitted Source -- Previous Permit #:T2-2009.0027 Date Issued: 5/9/2008
8.	Manufacturer:	ECLIPSE (BURNER) / IDAHO STEEL (CYCLONE)
9.	Model:	TAG1000 / HCYCLONE
10..	Maximum Capacity:	10 MBTU/HR / 1.88 T/HR
11.	Date of Construction:	2012
12.	Date of Modification (if any):	NA
13.	Is this a Controlled Emission Unit?	☒ No ☐ Yes If Yes, complete the following section. If No, go to line 22.

EMISSIONS CONTROL EQUIPMENT

14. Control Equipment Name and ID:	
15. Date of Installation:	16. Date of Modification (if any):
17. Manufacturer and Model Number:	
18. ID(s) of Emission Unit Controlled:	
19. Is operating schedule different than emission units(s) involved?	☐ Yes ☐ No
20. Does the manufacturer guarantee the control efficiency of the control equipment?	☐ Yes ☐ No (If Yes, attach and label manufacturer guarantee)

	Pollutant Controlled					
	PM	PM10	SO_2	NOx	VOC	CO
Control Efficiency						

21. If manufacturer's data is not available, attach a separate sheet of paper to provide the control equipment design specifications and performance data to support the above mentioned control efficiency.

EMISSION UNIT OPERATING SCHEDULE (hours/day, hours/year, or other)

22.	Actual Operation:	8424
23.	Maximum Operation:	8760

REQUESTED LIMITS

24.	Are you requesting any permit limits?	☐ Yes ☒ No (If Yes, indicate all that apply below)
	☐ Operation Hour Limit(s):	
	☐ Production Limit(s):	
	☐ Material Usage Limit(s):	
	☐ Limits Based on Stack Testing:	Please attach all relevant stack testing summary reports
	☐ Other:	
25.	Rationale for Requesting the Limit(s):	

Instructions for Form EU0

This form provides DEQ with information about an emissions unit. An emissions unit is the equipment or process that generates emissions of regulated air pollutant(s). This form is used by the permit writer to become familiar with the emissions unit (EU). This form is also used by DEQ to identify the control equipment and the emission point (stack or vent) used for the emission unit(s) proposed in this permit application. This form also asks for supporting documents to verify stated control efficiencies and details about the emission point. Additional information may be requested.

1 - 4. Provide the same company name, facility name (if different), facility ID number, and brief project description as on Form CS in the boxes provided. This is useful in case any pages of the application get separated.

5. Provide the name of the emissions unit (EU), such as “Union boiler,” etc. A separate EU0 form is required for each emissions unit.

6. Provide the identification (ID) number of the EU. It can be any unique identifier you choose; however, this ID number should be unique to this EU and should be used consistently throughout this application and any other air quality permit application(s) (e.g., operating permit application) to identify this EU.

7. Indicate the type of EU by checking the appropriate box (e.g., a new source to be constructed, an unpermitted existing source (as-built) applying for the first time, or an existing permitted source to be modified). If the EU is being modified, indicate on the form the most recent permit issued for the EU.

8. Provide the manufacturer's name for the EU. If the EU is custom-designed or homemade, indicate so.

9. Provide the model number of the EU. If the EU is custom-designed or homemade, indicate so.

10. Provide the maximum capacity of the EU. For example, a boiler’s rated capacity may be modified in units of MMBtu/hr in terms of heat input of natural gas; an assembly line capacity may be in parts produced per day. Capacity should be based on a rated nameplate or as stated in the manufacturer’s literature.

11. The date of construction is the month, day, and year in which construction or modification was commenced.

Definitions:

Construction fabrication, erection, or installation of an affected facility.

Commenced an owner or operator has undertaken a continuous program of construction or modification or that an owner or operator has entered into a contractual obligation to undertake and complete, within a reasonable time, a continuous program of construction or modification.

Modification any physical change in, or change in the method of operation of, an existing facility which increases the amount of any air pollutant (to which a standard applies) emitted to the atmosphere by that facility or which results in the emission of any air pollutant (to which a standard applies) to the atmosphere not previously emitted.

12. If the EU has been or will be modified, provide the month, day, and year of the most recent or future modification as defined in IDAPA 58.01.01.006.

13. Indicate if emissions from the EU are controlled by air pollution control equipment. If the answer is yes, complete the next section. If the answer is no, go to line 18.

14. Provide the name of the air pollution control equipment (e.g., wet scrubber) and the control equipment’s identification number. This identification number should be unique to this air pollution control equipment and should be used consistently throughout this and all other air quality permit applications (e.g., operating permit application) to identify this air pollution control equipment.

15. Provide the date the air pollution control equipment was installed.

16. If the air pollution control equipment has been modified, provide the date of the modification.

17. Provide the name of the manufacturer and the model number for the air pollution control equipment.

18. If this air pollution control equipment controls emissions from more than this EU, provide the identification number(s) of the other EU(s).

19. Indicate if this air pollution control equipment operates on a schedule different from the EU(s) it controls.

20. Indicate if the air pollution control manufacturer guarantees the control efficiency of the control equipment. If the answer is yes, attach the manufacturer's guarantee and label it with the air pollution control equipment identification number. Indicate the control efficiency for the target pollutant(s).

21. If the control efficiency of the air pollution control equipment is not guaranteed, attach the design specifications and any performance data to support the control efficiency stated in part 16. Label the supporting documentation with the air pollution control equipment identification number.

22. Provide the projected actual operating schedule for the emission unit in hours/day, hours/year, or other.

23. Provide the maximum operating schedule for the emission unit in hours/day, hours/year, or other.

24. If you are requesting to have limits placed on this EU, mark "Yes." Then, check the applicable requested limit(s) and provide the limit(s). For example, production limits may be in terms of parts produced per year, material usage limits may be in gallons per day.

25. Please provide the reason you are requesting limits, if any. This helps DEQ and the applicant determine whether the limits are necessary, and if they will accomplish the desired purpose. Provide supporting documentation (calculations, modeling assessment, regulatory review, etc.) for each limit requested.

DEQ AIR QUALITY PROGRAM
1410 N. Hilton, Boise, ID 83706
For assistance, call the
Air Permit Hotline – 1-877-5PERMIT

Emissions Unit - General **Form EU0**
Revision 4
08/28/08

Please see instructions on page 2 before filling out the form.

IDENTIFICATION

1. Company Name:	2. Facility Name:	3. Facility ID No:
Idahoan Foods, LLC	Idaho Falls Facility	019-00038

4. Brief Project Description:	Replacing Three Proctors with 2 Fluid Bed Dryers and Adding a Drum Dryer

EMISSIONS UNIT (PROCESS) IDENTIFICATION & DESCRIPTION

5.	Emissions Unit (EU) Name:	CYCLONE, BURNER/EXHAUST, FLUID BED DRYER, REAL #2
6.	EU ID Number:	24
7.	EU Type:	☒ New Source ☐ Unpermitted Existing Source ☐ Modification to a Permitted Source -- Previous Permit #:T2-2009.0027 Date Issued: 5/9/2008
8.	Manufacturer:	ECLIPS (BURNER) / IDAHO STEEL (CYCLONE)
9.	Model:	TAG 1000 / HCYCLONE
10..	Maximum Capacity:	10 MBTU/Hr / 1.88 T/Hr
11.	Date of Construction:	2012
12.	Date of Modification (if any):	NA
13.	Is this a Controlled Emission Unit?	☒ No ☐ Yes If Yes, complete the following section. If No, go to line 22.

EMISSIONS CONTROL EQUIPMENT

14. Control Equipment Name and ID:	
15. Date of Installation:	16. Date of Modification (if any):
17. Manufacturer and Model Number:	
18. ID(s) of Emission Unit Controlled:	
19. Is operating schedule different than emission units(s) involved?	☐ Yes ☐ No
20. Does the manufacturer guarantee the control efficiency of the control equipment?	☐ Yes ☐ No (If Yes, attach and label manufacturer guarantee)

	Pollutant Controlled					
	PM	PM10	SO_2	NOx	VOC	CO
Control Efficiency						

21. If manufacturer's data is not available, attach a separate sheet of paper to provide the control equipment design specifications and performance data to support the above mentioned control efficiency.

EMISSION UNIT OPERATING SCHEDULE (hours/day, hours/year, or other)

22.	Actual Operation:	8424
23.	Maximum Operation:	8760

REQUESTED LIMITS

24.	Are you requesting any permit limits?	☐ Yes ☒ No (If Yes, indicate all that apply below)
	☐ Operation Hour Limit(s):	
	☐ Production Limit(s):	
	☐ Material Usage Limit(s):	
	☐ Limits Based on Stack Testing:	Please attach all relevant stack testing summary reports
	☐ Other:	
25.	Rationale for Requesting the Limit(s):	

Instructions for Form EU0

This form provides DEQ with information about an emissions unit. An emissions unit is the equipment or process that generates emissions of regulated air pollutant(s). This form is used by the permit writer to become familiar with the emissions unit (EU). This form is also used by DEQ to identify the control equipment and the emission point (stack or vent) used for the emission unit(s) proposed in this permit application. This form also asks for supporting documents to verify stated control efficiencies and details about the emission point. Additional information may be requested.

1 - 4. Provide the same company name, facility name (if different), facility ID number, and brief project description as on Form CS in the boxes provided. This is useful in case any pages of the application get separated.

5. Provide the name of the emissions unit (EU), such as “Union boiler,” etc. A separate EU0 form is required for each emissions unit.

6. Provide the identification (ID) number of the EU. It can be any unique identifier you choose; however, this ID number should be unique to this EU and should be used consistently throughout this application and any other air quality permit application(s) (e.g., operating permit application) to identify this EU.

7. Indicate the type of EU by checking the appropriate box (e.g., a new source to be constructed, an unpermitted existing source (as-built) applying for the first time, or an existing permitted source to be modified). If the EU is being modified, indicate on the form the most recent permit issued for the EU.

8. Provide the manufacturer's name for the EU. If the EU is custom-designed or homemade, indicate so.

9. Provide the model number of the EU. If the EU is custom-designed or homemade, indicate so.

10. Provide the maximum capacity of the EU. For example, a boiler’s rated capacity may be modified in units of MMBtu/hr in terms of heat input of natural gas; an assembly line capacity may be in parts produced per day. Capacity should be based on a rated nameplate or as stated in the manufacturer’s literature.

11. The date of construction is the month, day, and year in which construction or modification was commenced.

Definitions:

Construction fabrication, erection, or installation of an affected facility.

Commenced an owner or operator has undertaken a continuous program of construction or modification or that an owner or operator has entered into a contractual obligation to undertake and complete, within a reasonable time, a continuous program of construction or modification.

Modification any physical change in, or change in the method of operation of, an existing facility which increases the amount of any air pollutant (to which a standard applies) emitted to the atmosphere by that facility or which results in the emission of any air pollutant (to which a standard applies) to the atmosphere not previously emitted.

12. If the EU has been or will be modified, provide the month, day, and year of the most recent or future modification as defined in IDAPA 58.01.01.006.

13. Indicate if emissions from the EU are controlled by air pollution control equipment. If the answer is yes, complete the next section. If the answer is no, go to line 18.

14. Provide the name of the air pollution control equipment (e.g., wet scrubber) and the control equipment’s identification number. This identification number should be unique to this air pollution control equipment and should be used consistently throughout this and all other air quality permit applications (e.g., operating permit application) to identify this air pollution control equipment.

15. Provide the date the air pollution control equipment was installed.

16. If the air pollution control equipment has been modified, provide the date of the modification.

17. Provide the name of the manufacturer and the model number for the air pollution control equipment.

18. If this air pollution control equipment controls emissions from more than this EU, provide the identification number(s) of the other EU(s).

19. Indicate if this air pollution control equipment operates on a schedule different from the EU(s) it controls.

20. Indicate if the air pollution control manufacturer guarantees the control efficiency of the control equipment. If the answer is yes, attach the manufacturer's guarantee and label it with the air pollution control equipment identification number. Indicate the control efficiency for the target pollutant(s).

21. If the control efficiency of the air pollution control equipment is not guaranteed, attach the design specifications and any performance data to support the control efficiency stated in part 16. Label the supporting documentation with the air pollution control equipment identification number.

22. Provide the projected actual operating schedule for the emission unit in hours/day, hours/year, or other.

23. Provide the maximum operating schedule for the emission unit in hours/day, hours/year, or other.

24. If you are requesting to have limits placed on this EU, mark "Yes." Then, check the applicable requested limit(s) and provide the limit(s). For example, production limits may be in terms of parts produced per year, material usage limits may be in gallons per day.

25. Please provide the reason you are requesting limits, if any. This helps DEQ and the applicant determine whether the limits are necessary, and if they will accomplish the desired purpose. Provide supporting documentation (calculations, modeling assessment, regulatory review, etc.) for each limit requested.

DEQ AIR QUALITY PROGRAM
1410 N. Hilton, Boise, ID 83706
For assistance, call the
Air Permit Hotline – 1-877-5PERMIT

Emissions Unit - General **Form EU0**
Revision 4
08/28/08

Please see instructions on page 2 before filling out the form.

IDENTIFICATION

1. Company Name:	2. Facility Name:	3. Facility ID No:
Idahoan Foods, LLC	Idaho Falls Facility	019-00038

4. Brief Project Description:	Replacing Three Proctors with 2 Fluid Bed Dryers and Adding a Drum Dryer

EMISSIONS UNIT (PROCESS) IDENTIFICATION & DESCRIPTION

5.	Emissions Unit (EU) Name:	CYCLONE, EXHAUST, CREAMY MASH
6.	EU ID Number:	25
7.	EU Type:	☒ New Source ☐ Unpermitted Existing Source ☐ Modification to a Permitted Source -- Previous Permit #:T2-2009.0027 Date Issued: 5/9/2008
8.	Manufacturer:	WELLIVER
9.	Model:	6082D1
10..	Maximum Capacity:	.75 T/HR
11.	Date of Construction:	1985
12.	Date of Modification (if any):	2012
13.	Is this a Controlled Emission Unit?	☒ No ☐ Yes If Yes, complete the following section. If No, go to line 22.

EMISSIONS CONTROL EQUIPMENT

14. Control Equipment Name and ID:	
15. Date of Installation:	16. Date of Modification (if any):
17. Manufacturer and Model Number:	
18. ID(s) of Emission Unit Controlled:	
19. Is operating schedule different than emission units(s) involved?	☐ Yes ☐ No
20. Does the manufacturer guarantee the control efficiency of the control equipment?	☐ Yes ☐ No (If Yes, attach and label manufacturer guarantee)

	Pollutant Controlled					
	PM	PM10	SO_2	NOx	VOC	CO
Control Efficiency						

21. If manufacturer's data is not available, attach a separate sheet of paper to provide the control equipment design specifications and performance data to support the above mentioned control efficiency.

EMISSION UNIT OPERATING SCHEDULE (hours/day, hours/year, or other)

22.	Actual Operation:	8424
23.	Maximum Operation:	8760

REQUESTED LIMITS

24.	Are you requesting any permit limits?	☐ Yes ☒ No (If Yes, indicate all that apply below)
	☐ Operation Hour Limit(s):	
	☐ Production Limit(s):	
	☐ Material Usage Limit(s):	
	☐ Limits Based on Stack Testing:	Please attach all relevant stack testing summary reports
	☐ Other:	
25.	Rationale for Requesting the Limit(s):	

Instructions for Form EU0

This form provides DEQ with information about an emissions unit. An emissions unit is the equipment or process that generates emissions of regulated air pollutant(s). This form is used by the permit writer to become familiar with the emissions unit (EU). This form is also used by DEQ to identify the control equipment and the emission point (stack or vent) used for the emission unit(s) proposed in this permit application. This form also asks for supporting documents to verify stated control efficiencies and details about the emission point. Additional information may be requested.

1 - 4. Provide the same company name, facility name (if different), facility ID number, and brief project description as on Form CS in the boxes provided. This is useful in case any pages of the application get separated.

5. Provide the name of the emissions unit (EU), such as “Union boiler,” etc. A separate EU0 form is required for each emissions unit.

6. Provide the identification (ID) number of the EU. It can be any unique identifier you choose; however, this ID number should be unique to this EU and should be used consistently throughout this application and any other air quality permit application(s) (e.g., operating permit application) to identify this EU.

7. Indicate the type of EU by checking the appropriate box (e.g., a new source to be constructed, an unpermitted existing source (as-built) applying for the first time, or an existing permitted source to be modified). If the EU is being modified, indicate on the form the most recent permit issued for the EU.

8. Provide the manufacturer's name for the EU. If the EU is custom-designed or homemade, indicate so.

9. Provide the model number of the EU. If the EU is custom-designed or homemade, indicate so.

10. Provide the maximum capacity of the EU. For example, a boiler’s rated capacity may be modified in units of MMBtu/hr in terms of heat input of natural gas; an assembly line capacity may be in parts produced per day. Capacity should be based on a rated nameplate or as stated in the manufacturer’s literature.

11. The date of construction is the month, day, and year in which construction or modification was commenced.

Definitions:

Construction fabrication, erection, or installation of an affected facility.

Commenced an owner or operator has undertaken a continuous program of construction or modification or that an owner or operator has entered into a contractual obligation to undertake and complete, within a reasonable time, a continuous program of construction or modification.

Modification any physical change in, or change in the method of operation of, an existing facility which increases the amount of any air pollutant (to which a standard applies) emitted to the atmosphere by that facility or which results in the emission of any air pollutant (to which a standard applies) to the atmosphere not previously emitted.

12. If the EU has been or will be modified, provide the month, day, and year of the most recent or future modification as defined in IDAPA 58.01.01.006.

13. Indicate if emissions from the EU are controlled by air pollution control equipment. If the answer is yes, complete the next section. If the answer is no, go to line 18.

14. Provide the name of the air pollution control equipment (e.g., wet scrubber) and the control equipment’s identification number. This identification number should be unique to this air pollution control equipment and should be used consistently throughout this and all other air quality permit applications (e.g., operating permit application) to identify this air pollution control equipment.

15. Provide the date the air pollution control equipment was installed.

16. If the air pollution control equipment has been modified, provide the date of the modification.

17. Provide the name of the manufacturer and the model number for the air pollution control equipment.

18. If this air pollution control equipment controls emissions from more than this EU, provide the identification number(s) of the other EU(s).

19. Indicate if this air pollution control equipment operates on a schedule different from the EU(s) it controls.

20. Indicate if the air pollution control manufacturer guarantees the control efficiency of the control equipment. If the answer is yes, attach the manufacturer's guarantee and label it with the air pollution control equipment identification number. Indicate the control efficiency for the target pollutant(s).

21. If the control efficiency of the air pollution control equipment is not guaranteed, attach the design specifications and any performance data to support the control efficiency stated in part 16. Label the supporting documentation with the air pollution control equipment identification number.

22. Provide the projected actual operating schedule for the emission unit in hours/day, hours/year, or other.

23. Provide the maximum operating schedule for the emission unit in hours/day, hours/year, or other.

24. If you are requesting to have limits placed on this EU, mark "Yes." Then, check the applicable requested limit(s) and provide the limit(s). For example, production limits may be in terms of parts produced per year, material usage limits may be in gallons per day.

25. Please provide the reason you are requesting limits, if any. This helps DEQ and the applicant determine whether the limits are necessary, and if they will accomplish the desired purpose. Provide supporting documentation (calculations, modeling assessment, regulatory review, etc.) for each limit requested.

DEQ AIR QUALITY PROGRAM
1410 N. Hilton, Boise, ID 83706
For assistance, call the
Air Permit Hotline – 1-877-5PERMIT

Emissions Unit - General **Form EU0**
Revision 4
08/28/08

Please see instructions on page 2 before filling out the form.

IDENTIFICATION

1. Company Name:	2. Facility Name:	3. Facility ID No:
Idahoan Foods, LLC	Idaho Falls Facility	019-00038

4. Brief Project Description:	Replacing Three Proctors with 2 Fluid Bed Dryers and Adding a Drum Dryer

EMISSIONS UNIT (PROCESS) IDENTIFICATION & DESCRIPTION

5.	Emissions Unit (EU) Name:	BAG HOUSE, Flake Tank Rejects
6.	EU ID Number:	26
7.	EU Type:	☒ New Source ☐ Unpermitted Existing Source ☐ Modification to a Permitted Source -- Previous Permit #:T2-2009.0027 Date Issued: 5/9/2008
8.	Manufacturer:	KTRON
9.	Model:	F15214-174M
10..	Maximum Capacity:	3.75 T/hr
11.	Date of Construction:	2012
12.	Date of Modification (if any):	NA
13.	Is this a Controlled Emission Unit?	☒ No ☐ Yes If Yes, complete the following section. If No, go to line 22.

EMISSIONS CONTROL EQUIPMENT

14. Control Equipment Name and ID:	
15. Date of Installation:	16. Date of Modification (if any):
17. Manufacturer and Model Number:	
18. ID(s) of Emission Unit Controlled:	
19. Is operating schedule different than emission units(s) involved?	☐ Yes ☐ No
20. Does the manufacturer guarantee the control efficiency of the control equipment?	☐ Yes ☐ No (If Yes, attach and label manufacturer guarantee)

	Pollutant Controlled					
	PM	PM10	SO_2	NOx	VOC	CO
Control Efficiency						

21. If manufacturer's data is not available, attach a separate sheet of paper to provide the control equipment design specifications and performance data to support the above mentioned control efficiency.

EMISSION UNIT OPERATING SCHEDULE (hours/day, hours/year, or other)

22.	Actual Operation:	8424
23.	Maximum Operation:	8760

REQUESTED LIMITS

24.	Are you requesting any permit limits?	☐ Yes ☒ No (If Yes, indicate all that apply below)
	☐ Operation Hour Limit(s):	
	☐ Production Limit(s):	
	☐ Material Usage Limit(s):	
	☐ Limits Based on Stack Testing:	Please attach all relevant stack testing summary reports
	☐ Other:	
25.	Rationale for Requesting the Limit(s):	

Instructions for Form EU0

This form provides DEQ with information about an emissions unit. An emissions unit is the equipment or process that generates emissions of regulated air pollutant(s). This form is used by the permit writer to become familiar with the emissions unit (EU). This form is also used by DEQ to identify the control equipment and the emission point (stack or vent) used for the emission unit(s) proposed in this permit application. This form also asks for supporting documents to verify stated control efficiencies and details about the emission point. Additional information may be requested.

1 - 4. Provide the same company name, facility name (if different), facility ID number, and brief project description as on Form CS in the boxes provided. This is useful in case any pages of the application get separated.

5. Provide the name of the emissions unit (EU), such as “Union boiler,” etc. A separate EU0 form is required for each emissions unit.

6. Provide the identification (ID) number of the EU. It can be any unique identifier you choose; however, this ID number should be unique to this EU and should be used consistently throughout this application and any other air quality permit application(s) (e.g., operating permit application) to identify this EU.

7. Indicate the type of EU by checking the appropriate box (e.g., a new source to be constructed, an unpermitted existing source (as-built) applying for the first time, or an existing permitted source to be modified). If the EU is being modified, indicate on the form the most recent permit issued for the EU.

8. Provide the manufacturer's name for the EU. If the EU is custom-designed or homemade, indicate so.

9. Provide the model number of the EU. If the EU is custom-designed or homemade, indicate so.

10. Provide the maximum capacity of the EU. For example, a boiler’s rated capacity may be modified in units of MMBtu/hr in terms of heat input of natural gas; an assembly line capacity may be in parts produced per day. Capacity should be based on a rated nameplate or as stated in the manufacturer’s literature.

11. The date of construction is the month, day, and year in which construction or modification was commenced.

Definitions:

Construction fabrication, erection, or installation of an affected facility.

Commenced an owner or operator has undertaken a continuous program of construction or modification or that an owner or operator has entered into a contractual obligation to undertake and complete, within a reasonable time, a continuous program of construction or modification.

Modification any physical change in, or change in the method of operation of, an existing facility which increases the amount of any air pollutant (to which a standard applies) emitted to the atmosphere by that facility or which results in the emission of any air pollutant (to which a standard applies) to the atmosphere not previously emitted.

12. If the EU has been or will be modified, provide the month, day, and year of the most recent or future modification as defined in IDAPA 58.01.01.006.

13. Indicate if emissions from the EU are controlled by air pollution control equipment. If the answer is yes, complete the next section. If the answer is no, go to line 18.

14. Provide the name of the air pollution control equipment (e.g., wet scrubber) and the control equipment’s identification number. This identification number should be unique to this air pollution control equipment and should be used consistently throughout this and all other air quality permit applications (e.g., operating permit application) to identify this air pollution control equipment.

15. Provide the date the air pollution control equipment was installed.

16. If the air pollution control equipment has been modified, provide the date of the modification.

17. Provide the name of the manufacturer and the model number for the air pollution control equipment.

18. If this air pollution control equipment controls emissions from more than this EU, provide the identification number(s) of the other EU(s).

19. Indicate if this air pollution control equipment operates on a schedule different from the EU(s) it controls.

20. Indicate if the air pollution control manufacturer guarantees the control efficiency of the control equipment. If the answer is yes, attach the manufacturer's guarantee and label it with the air pollution control equipment identification number. Indicate the control efficiency for the target pollutant(s).

21. If the control efficiency of the air pollution control equipment is not guaranteed, attach the design specifications and any performance data to support the control efficiency stated in part 16. Label the supporting documentation with the air pollution control equipment identification number.

22. Provide the projected actual operating schedule for the emission unit in hours/day, hours/year, or other.

23. Provide the maximum operating schedule for the emission unit in hours/day, hours/year, or other.

24. If you are requesting to have limits placed on this EU, mark "Yes." Then, check the applicable requested limit(s) and provide the limit(s). For example, production limits may be in terms of parts produced per year, material usage limits may be in gallons per day.

25. Please provide the reason you are requesting limits, if any. This helps DEQ and the applicant determine whether the limits are necessary, and if they will accomplish the desired purpose. Provide supporting documentation (calculations, modeling assessment, regulatory review, etc.) for each limit requested.

Idahoan Foods, LLC
P.O. Box 130 529 North 3500 East Lewisville, Idaho 83431
208.754.4686 800.635.6100 www.idahoan.com

RECEIVED
APR 16 2012
DEPARTMENT OF ENVIRONMENTAL QUALITY
STATE A.Q. PROGRAM

Date: 4/11/2012
From: Idahoan Foods, LLC, Idaho Falls, Facility ID# 019-00038
Subject: Request for Permit modification
To: Idaho Department of Environmental Quality
Bill Rogers
1410 North Hilton, Boise, ID 83706

Bill,

Idahoan is replacing the 3 Proctors with 3 newer ones, and adding an additional Drum Dryer. The new Proctors will have a much higher production rates than those they are replacing. Currently there are no Emissions Controls. We will be adding Cyclones and Bag Houses to the process. We need to modify our permit to show these changes.

We plan on completing the switch by Aug 15, 2012

8760 run hours per year

A check for $1,000 in enclosed for processing fee.

Other attachments: Forms, CSPTC, FRA, GI
Form BCE will come later.

Thank you,

Leo Herbert

~Leo Herbert~
Corporate Environmental Manager
Idahoan Foods, LLC
208-754-8194
lherbert@Idahoan.com

RECEIVED
APR 16 2012
DEPARTMENT OF ENVIRONMENTAL QUALITY
STATE A.Q. PROGRAM

DEQ AIR QUALITY PROGRAM
1410 N. Hilton, Boise, ID 83706
For assistance, call the
Air Permit Hotline – 1-877-5PERMIT

Cover Sheet for Air Permit Application – Permit to Construct **Form CSPTC**

Please see instructions on page 2 before filling out the form.

COMPANY NAME, FACILITY NAME, AND FACILITY ID NUMBER

1. Company Name	Idahoan Foods, LLC		
2. Facility Name	Idaho Falls Facility	3. Facility ID No.	019-00038
4. Brief Project Description - One sentence or less	Increasing Production Rate & adding Baghouses		

PERMIT APPLICATION TYPE

5. ☐ New Source ☐ New Source at Existing Facility ☐ PTC for a Tier I Source Processed Pursuant to IDAPA 58.01.01.209.05.c
☐ Unpermitted Existing Source ☐ Facility Emissions Cap ☒ Modify Existing Source: Permit No.: T2-2009.0027 Date Issued: 5/9/08
☐ Required by Enforcement Action: Case No.:____

6. ☒ Minor PTC ☐ Major PTC

FORMS INCLUDED

Included	N/A	Forms		DEQ Verify
☐	☐	Form CSPTC – Cover Sheet		☐
☒	☐	Form GI – Facility Information		☐
☐	☐	Form EU0 – Emissions Units General		☐
☐	☐	Form EU1– Industrial Engine Information	Please specify number of EU1s attached: ____	☐
☐	☐	Form EU2– Nonmetallic Mineral Processing Plants	Please specify number of EU2s attached: ____	☐
☐	☐	Form EU3– Spray Paint Booth Information	Please specify number of EU3s attached: ____	☐
☐	☐	Form EU4– Cooling Tower Information	Please specify number of EU3s attached: ____	☐
☐	☐	Form EU5 – Boiler Information	Please specify number of EU4s attached: ____	☐
☐	☐	Form CBP– Concrete Batch Plant	Please specify number of CBPs attached: ____	☐
☐	☐	Form HMAP – Hot Mix Asphalt Plant	Please specify number of HMAPs attached: ____	☐
☐	☐	PERF – Portable Equipment Relocation Form		☐
☐	☐	Form AO – Afterburner/Oxidizer		☐
☐	☐	Form CA – Carbon Adsorber		☐
☐	☐	Form CYS – Cyclone Separator		☐
☐	☐	Form ESP – Electrostatic Precipitator		☐
☒	☐	Form BCE– Baghouses Control Equipment		☐
☐	☐	Form SCE– Scrubbers Control Equipment		☐
☐	☐	Form VSCE – Venturi Scrubber Control Equipment		☐
☐	☐	Form CAM – Compliance Assurance Monitoring		☐
☐	☐	Forms EI-– Emissions Inventory		☐
☐	☐	PP – Plot Plan		☐
☐	☐	Forms MI1 – MI4 – Modeling	(Excel workbook, all 4 worksheets)	☐
☒	☐	Form FRA – Federal Regulation Applicability		☐

DEQ AIR QUALITY PROGRAM
1410 N. Hilton, Boise, ID 83706
For assistance, call the
Air Permit Hotline – 1-877-5PERMIT

General Information **Form GI**
Revision 7
2/18/10

Please see instructions on page 2 before filling out the form.

All information is required. If information is missing, the application will not be processed.

IDENTIFICATION

1. Company Name	2. Facility Name:
Idahoan Foods, LLC	Idaho Falls Facility

3. Brief Project Description:	Old Permit is expiring We are replacing old equipment and replacing with newer higher production throughput machines

FACILITY INFORMATION

4. Primary Facility Permit Contact Person/Title	Dan Huff		Plant Manager	
5. Telephone Number and Email Address	208-754-8196		dhuff@idahoan.com	
6. Alternate Facility Contact Person/Title	Leo Herbert		Corporate Environmental Manager	
7. Telephone Number and Email Address	208-754-8194		lherbert@idahoan.com	
8. Address to Which the Permit Should be Sent	P.O. Box 130, 529 N. 3500 E.			
9. City/County/State/Zip Code	Lewisville	Jefferson	ID	83431
10. Equipment Location Address (if different than the mailing address above)	6140 West River Road			
11. City/County/State/Zip Code	Idaho Falls	Bonneville	ID	83402
12. Is the Equipment Portable?	☐ Yes ☒ No			
13. SIC Code(s) and NAICS Code	Primary SIC: 2034	Secondary SIC:	NAICS: 311423	
14. Brief Business Description and Principal Product	Dehydrated Potato Processing			
15. Indentify any adjacent or contiguous facility that this company owns and/or operates	none			
16. Specify the reason for the application	☒ Permit to Construct (PTC) For Tier I permitted facilities only: If you are applying for a PTC then you must also specify how the PTC will be incorporated into the Tier I permit. ☐ Incorporate the PTC at the time of the Tier I renewal ☐ Co-process the Tier I modification and PTC ☐ Administratively amend the Tier I permit to incorporate the PTC upon your request (IDAPA 58.01.01.209.05.a, b, or c) ☐ Tier I Permit ☐ Tier II Permit ☐ Tier II/Permit to Construct			

CERTIFICATION

In accordance with **IDAPA 58.01.01.123 (Rules for the Control of Air Pollution in Idaho), I** certify based on information and belief formed after reasonable inquiry, the statements and information in the document(s) are true, accurate, and complete.

17. Responsible Official's Name/Title	Leo Herbert	Corporate Environmental Manager	
18. Responsible Official Address	P. O. Box 130 Lewisville, ID 83431		
19. Responsible Official Telephone Number	208-754-8194		
20. Responsible Official Email Address	lherbert@idahoan.com		
21. Responsible Official's Signature	Leo Herbert	Date:	4/11/12

22. ☒ Check here to indicate that you would like to review the draft permit prior to final issuance.

DEQ AIR QUALITY PROGRAM
1410 N. Hilton, Boise, ID 83706
For assistance, call the
Air Permit Hotline – 1-877-5PERMIT

AIR PERMIT APPLICATION

Revision 6
10/7/09

For each box in the table below, CTRL+click on the blue underlined text for instructions and information.

IDENTIFICATION	
1. Company Name:	2. Facility Name:
Idahoan Foods, LLC	Idaho Falls Facility
3. Brief Project Description:	Facility Equepment Upgrade and product throughput increase

APPLICABILITY DETERMINATION	
4. List applicable subparts of the New Source Performance Standards (NSPS) (40 CFR part 60). Examples of NSPS affected emissions units include internal combustion engines, boilers, turbines, etc. The applicant must thoroughly review the list of affected emissions units.	List of applicable subpart(s): ☒ Not Applicable
5. List applicable subpart(s) of the National Emission Standards for Hazardous Air Pollutants (NESHAP) found in 40 CFR part 61 and 40 CFR part 63. Examples of affected emission units include solvent cleaning operations, industrial cooling towers, paint stripping and miscellaneous surface coating. EPA has a web page dedicated to NESHAP that should be useful to applicants.	List of applicable subpart(s): ☒ Not Applicable
6. For each subpart identified above, conduct a complete a regulatory analysis using the instructions and referencing the example provided on the following pages. **Note** - Regulatory reviews must be submitted with sufficient detail so that DEQ can verify applicability and document in legal terms why the regulation applies. Regulatory reviews that are submitted with insufficient detail will be determined incomplete.	☐ A detailed regulatory review is provided (Follow instructions and example). ☒ DEQ has already been provided a detailed regulatory review. Give a reference to the document including the date. Statement of Basis April 13, 2009

IF YOU ARE UNSURE HOW TO ANSWER ANY OF THESE QUESTIONS, CALL THE AIR PERMIT HOTLINE AT 1-877-5PERMIT

It is emphasized that it is the applicant's responsibility to satisfy all technical and regulatory requirements, and that DEQ will help the applicant understand what those requirements are prior to the application being submitted but that DEQ will not perform the required technical or regulatory analysis on the applicant's behalf.

State of Idaho
Department of Environmental Quality
Air Quality Division

AIR QUALITY PERMIT
STATEMENT OF BASIS

Tier II Operating Permit and Permit to Construct

No. T2-2009.0027

Final

Idahoan Foods, LLC

Idaho Falls, Idaho

Facility ID No. 019-00038

April 13, 2009

Eric Clark

Permit Writer

The purpose of this Statement of Basis is to satisfy the requirements of IDAPA 58.01.01.et seq, Rules for the Control of Air Pollution in Idaho, for issuing air permits.

Table of Contents

ACRONYMS, UNITS, AND CHEMICAL NOMENCLATURE 3

1. FACILITY INFORMATION 4
2. APPLICATION SCOPE AND APPLICATION CHRONOLOGY 4
3. TECHNICAL ANALYSIS 4
4. REGULATORY REVIEW 5
5. PERMIT FEES 6
6. PUBLIC COMMENT 6

APPENDIX A – AIRS INFORMATION

Acronyms, Units, and Chemical Nomenclature

AFS	AIRS Facility Subsystem
AIRS	Aerometric Information Retrieval System
AQCR	Air Quality Control Region
ASTM	American Society for Testing and Materials
cfm	cubic feet per minute
CAM	Compliance Assurance Monitoring
CO	carbon monoxide
DEQ	Department of Environmental Quality
EPA	Environmental Protection Agency
HAPs	Hazardous Air Pollutants
IDAPA	A numbering designation for all administrative rules in Idaho promulgated in accordance with the Idaho Administrative Procedures Act
lb/hr	pounds per hour
m	meter(s)
m/sec	meters per second
MACT	Maximum Available Control Technology
MMBtu	Million British thermal units
NAAQS	National Ambient Air Quality Standards
NESHAP	Nation Emission Standards for Hazardous Air Pollutants
NO_X	nitrogen oxides
NSPS	New Source Performance Standards
O_3	ozone
PM	Particulate Matter
PM_{10}	Particulate Matter with an aerodynamic diameter less than or equal to a nominal 10 micrometers
PSD	Prevention of Significant Deterioration
PTC	Permit to Construct
PTE	Potential to Emit
Rules	Rules for the Control of Air Pollution in Idaho
SM	synthetic minor
SO_2	sulfur dioxide
TAP	Toxic Air Pollutant
T2/PTC	Tier II operating permit and permit to construct
T/yr	Tons per year
$\mu g/m^3$	micrograms per cubic meter
UTM	Universal Transverse Mercator
VOC	volatile organic compound

1. FACILITY INFORMATION

1.1 Facility Description

Idahoan Foods, LLC is a potato processing company that dehydrates potatoes to make flakes, slices, and dices in Idaho Falls, Idaho. The process includes dryers and dehydration lines, which are sources of particulate matter emissions.

1.2 Permitting Action and Facility Permitting History

This T2/PTC is a transfer by revision of an existing T2/PTC. Permit status is noted as active and in effect (A) or superseded (S).

May, 9, 2008	T2-2007.0116, Initial T2/PTC replaced, Permit status (S)

2. APPLICATION SCOPE AND APPLICATION CHRONOLOGY

2.1 Application Scope

This project is a T2/PTC revision for a facility name, facility contact and responsible official change. No other substantive changes were made to the permit.

2.2 Application Chronology

February 20, 2009	DEQ received a request for a facility name change from Idahoan Foods, LLC
March 26, 2009	DEQ sent a draft T2/PTC to the facility for review.
April 13, 2009	The final permit and statement of basis were issued.

3. TECHNICAL ANALYSIS

This section lists the emissions units, describes the production or manufacturing processes, and provides the emissions inventory for this facility. For details regarding the emissions units, process descriptions, and the emissions inventory for this facility, refer to the Statement of Basis for T2/PTC No. T2-2007.0116 issued on May 9, 2008. This information was not changed as a result of this project.

~~3.1~~3.1 Origin of Existing Emissions Limits

Formatted: Bullets and Numbering

All permit conditions were established in T2/PTC No. P-2007.0116 as it was the initial permit for the facility.

Permit Condition 3.3 was based on emissions inventory associated with the application.

Permit Conditions 3.4 and 3.5 were based on Idaho State Rules for the Control of Air Pollution in Idaho section IDAPA 58.01.01.677

Permit Conditions 3.6 was based on Permit Conditions 3.4 and 3.5 were based on Idaho state Rules for the Control of Air Pollution in Idaho section IDAPA 58.01.01.677

Permit Conditions 3.7-3.11 and 4.1-4.9 were based on Rules for the Control of Air Pollution in Idaho section IDAPA 58.01.01.201 through 228

4. REGULATORY REVIEW

4.1 Attainment Designation (40 CFR 81.313)

The facility is located in Bonneville County, which is designated as attainment or unclassifiable for PM_{10}, $PM_{2.5}$, CO, NO_2, SO_X, and Ozone. Reference 40 CFR 81.313.

4.2 Permit to Construct (IDAPA 58.01.01.201) and Tier II Operating Permit (IDAPA 58.01.01.401)

This permitting action is a Tier II operating permit and a Permit to Construct for revision to T2/PTC permit No. T2-2007.0116.

4.3 Title V Classification (IDAPA 58.01.01.300, 40 CFR Part 70)

Title V permitting program requirements do not apply to this facility. The potential to emit of the facility for emission of any single criteria pollutant is less than the 100 T/yr applicability threshold. In addition, the potential to emit any single hazardous air pollutant (HAP) is less than 10 T/yr and the potential to emit any combination of HAPs is less than 25 T/yr.

4.4 PSD Classification (40 CFR 52.21)

Prevention of Significant Deterioration (PSD) requirements do not apply to this facility. This facility is not a designated facility, and the emission of any single pollutant is less than the 250 T/yr applicability threshold.

~~4.5 NSPS Applicability (40 CFR 60)~~ No longer applicable - Removed

~~The facility's 200,000 gallon storage tank was constructed in 1974 and is subject to 40 CFR 60.110.c (2) and 40 CFR 60.113.d (1). The storage tank shall store distillate fuel oil only. Since only distillate fuel oil shall be stored in the 200,000 gallon storage tank, the facility is not required to maintain any other monitoring records.~~

4.6 NESHAP Applicability (40 CFR 61)

None of the National Emissions Standardsfor Hazardous Air Pollutants (NESHAP) apply to this facility.

4.7 MACT Applicability (40 CFR 63)

None of the Maximum Achievable Control Technology (MACT) requirements apply to this facility.

4.8 CAM Applicability (40 CFR 64)

This facility is not classified as a major facility under the Title V program, therefore, CAM requirements do not apply.

4.9 Permit Conditions Review

Permit Cover page: The facility name, permittee contact information, and responsible official have been changed. Also, the classification was updated to SM80 to reflect the 94.05 ton/yr SO_2 emitted by the facility. DEQ included a NAICS (North American Industry Classification System) code on the cover page of this permitand an updated General Provisions to reflect changes that have been made to the T2/PTC.

Permit Condition 2.9: Typographical errors have been corrected.

No other permit conditions in this revised permit have been added, revised, modified, or ddeted as a result of this permitting action.

5. PERMIT FEES

In accordance with IDAPA 58.01.01.225 no fees are required for name and ownership changes that meet the requirements of IDAPA 58.01.01.224.03. This project meets these requirements. Therefore, no processing fee is required for this project.

6. PUBLIC COMMENT

An opportunity for public comment period on the PTC application is not required for name changes in accordance with IDAPA 58.01.01.209.04. Therefore, a public comment period was not provided for this project.

Appendix A – AIRS Information